NACA TN No. 1749

8197

TECH LIBRARY KAFB, NM
0065029

NATIONAL ADVISORY COMMITTEE FOR AERONAUTICS

TECHNICAL NOTE

No. 1749

SHEAR FLOWS IN MULTICELL SANDWICH SECTIONS

By Stanley U. Benscoter

Langley Aeronautical Laboratory
Langley Field, Va.

Washington
November 1948

AFMDC
TECHNICAL LIBRARY
AFL 2811

TECH LIBRARY KAFB, NM
0065029

NATIONAL ADVISORY COMMITTEE FOR AERONAUTICS

TECHNICAL NOTE NO. 1749

SHEAR FLOWS IN MULTICELL SANDWICH SECTIONS

By Stanley U. Benscoter

SUMMARY

Solutions are developed for shear flows in multicell sandwich sections for various cell-twist distributions. The problems of twisting and bending of a cantilever beam are first considered. More general cell-twist distributions are then considered, including the arbitrary distribution. A formula is also developed for the torsion constant of a sandwich section.

INTRODUCTION

The relation between load and deflection, for a homogeneous, elastic, isotropic plate, is expressed by a well-known fourth-order differential equation. A similar relation between load and deflection for a multicell sandwich plate should be given by a differential-difference equation since the internal shear flows and cell twists vary in discrete steps. In order to develop this differential-difference equation for the relation between load and deflection, it is necessary to know relations between bending moments, twisting moments, and deflections. It is convenient to replace the concept of twisting moment by the concept of cellular shear flows corresponding to the well-known shear flows in a multicell section according to the St. Venant torsion theory. This paper is devoted to the determination of various relations between cellular shear flows and cell twists which may exist physically. Solutions are given for the distribution of shear flows required to preserve continuity of the warping displacements when the rate of twist varies from cell to cell in various manners. Symmetrical shear-flow distributions provide a resultant torque on the section but no resultant shear. Antisymmetrical distributions give neither a resultant shear nor a torque and, hence, are self-equilibrating. A formula is also derived for the torsion constant of a sandwich section with any number of cells.

SYMBOLS

A	cell area
c	width of cell

d	dimensionless factor defined by equation (14)
E	Young's modulus
G	shear modulus of elasticity
h	height of cell
I_X	moment of inertia of cross section about X-axis
J	torsion constant
K	number of cells
l	length of wall segment
n	number of a cell (usually an end cell)
q	shear flow
s	coordinate along cell wall
t	wall thickness
T	torque
u	displacement along cell wall
w	axial (warping) displacement
W	concentrated load
x	number of an arbitrary cell
y	vertical coordinate
z	axial coordinate
α	aspect ratio of wall segment (l/t)
β	dimensionless factor defined by equation (17)
γ	dimensionless factor defined by equation (41)
λ	proportionality constant for characteristic distributions
μ	Poisson's ratio

τ shear stress

ϕ angle of twist

θ rate of twist

ψ function defined by equations (76) and (70)

DIFFERENCE EQUATION RELATING SHEAR FLOWS AND CELL TWISTS

A difference equation relating cellular shear flow to cellular twist (rate of twist) may be derived from the condition that the warping displacement must be a continuous function around any closed path. This is the condition of continuity for thin-walled sections. Consider the sandwich section shown in figure 1(a). The nth cell is shown in figure 1(b). The displaced position of the cell due to loads is shown by dashed lines. The angle of twist of the cell is indicated as ϕ_n. The width and height of the cell are indicated by c and h, respectively. The left web, AD, is web k and the right web, BC, is web k+1.

The z-coordinate is taken parallel to the axis of a cell and is considered to be positive in the direction extending outward from the paper. The s-coordinate indicates the distance along a wall segment and is considered to be positive in the counterclockwise direction. Axial displacements (warping displacements) are indicated by w and transverse displacements along a wall segment, by u. These displacements are positive in the direction of positive coordinates. The shear stress in a wall segment may be defined in terms of these displacements by

$$\tau = G\frac{\partial w}{\partial s} + G\frac{\partial u}{\partial z} \tag{1}$$

The shear stress τ, or the shear flow q, are positive when acting in the positive direction of the s-coordinate. The vertical web displacements y_k and y_{k+1} are considered positive upward. The angle of twist is given by

$$\phi_n = \frac{y_{k+1} - y_k}{c} \tag{2}$$

The rate of twist is obtained by differentiating equation (2) with respect to z. Thus,

$$\theta_n = \frac{\partial}{\partial z}\left(\frac{y_{k+1} - y_k}{c}\right) \tag{3}$$

In the top and bottom walls the quantity $\partial u/\partial z$ may be considered to consist of two parts. The first part is due to the rotation of the cell

and is given by the formula $\theta_n h/2$. The second part is due to the development of tensile or compressive strains and may be indicated as $u_1(s)$. This function is antisymmetrical about the center of the wall segment. In the vertical webs the displacement u is equal in magnitude to the displacement y. In the right web, u equals y_{k+1}; and in the left web, u equals $-y_k$.

Equation (1) may be written for each web separately as follows:

Web AB

$$\tau = G\frac{\partial w}{\partial s} + \frac{Gh}{2}\theta_n + u_1(s) \tag{4a}$$

Web BC

$$\tau = G\frac{\partial w}{\partial s} + G\frac{\partial y_{k+1}}{\partial z} \tag{4b}$$

Web CD

$$\tau = G\frac{\partial w}{\partial s} + \frac{Gh}{2}\theta_n + u_1(s) \tag{4c}$$

Web DA

$$\tau = G\frac{\partial w}{\partial s} - G\frac{\partial y_k}{\partial z} \tag{4d}$$

The condition of continuity of warping displacements is expressed by the following equation:

$$\oint_n \frac{\partial w}{\partial s}\,ds = 0 \tag{5}$$

The subscript on the integral sign indicates that the line integration is carried around the nth cell. The equation must hold true for each cell.

Integration of equation (1) around the nth cell gives, with substitution of equation (5),

$$\oint_n \tau\,ds = G\oint_n \frac{\partial u}{\partial z}\,ds \tag{6}$$

From the formulas in equations (4) it is seen that the integral on the right may be evaluated to obtain

$$\oint_n \tau\,ds = AG\theta_n + Gh\frac{\partial}{\partial z}\left(y_{k+1} - y_k\right) \tag{7}$$

The function $u_1(s)$ makes no contribution to the integral. From equations (2) and (3) the second term on the right may be evaluated to obtain

$$\oint_n \tau \, ds = 2AG\theta_n \tag{8}$$

Introduction of the shear flow $q = t\tau$ gives

$$\oint_n q \frac{ds}{t} = 2AG\theta_n \tag{9}$$

The total shear-flow distribution may be considered to consist of two parts. The first part consists of shear stresses associated with bending action. These shear stresses are related by equilibrium conditions to the rate of change of normal stress. The second part of the shear-flow distribution consists of cellular shear flows resembling the shear flows of multicell sections in elementary torsion. The shear flow in the top or bottom wall of a cell is equal to the cellular shear flow associated with the cell. The shear flow in a vertical web is equal to the difference between the cellular shear flows associated with the two adjacent cells.

In the present paper only the second part of the shear-flow distribution is considered. The shear flows accompanying bending are not considered further in order that attention may be devoted to a development of formulas for cellular shear flows with variable cell twists.

Equation (9) becomes

$$-\alpha_2 q_{n-1} + (\Sigma\alpha) q_n - \alpha_2 q_{n+1} = 2AG\theta_n \tag{10}$$

where

$$\alpha_2 = \frac{l_2}{t_2} \tag{11}$$

The coefficient $\Sigma\alpha$ is the sum of the "aspect ratios" of the wall segments of a single cell. Structural dimensions of several sandwich sections are illustrated in figure 2. Although the equations have been developed for a rectangular cell, they are also applicable to other shapes. The structures of figures 2(b) and 2(c) are mathematically identical insofar as the relationship of equation (10) is concerned.

In the development of solutions of difference equations, it is generally convenient to use the letter x for the independent variable. Thus the arbitrary cell is indicated as cell x. The shear flow of this cell is q_x and the cell twist is θ_x. The last cell may be indicated as cell n. The numbering of cells is shown in figure 3. A symmetrical numbering method may be used as shown in figures 3(a) and 3(b).

For an odd number of cells the total number of cells is $2n + 1$, while for an even number the total number is $2n$. With either an even or odd number of cells the numbering from left to right as shown in figure 3(c) may be used. In this case, n is equal to the number of cells. With x as the independent variable, equation (10) becomes

$$-\alpha_2 q_{x-1} + (\Sigma\alpha) q_x - \alpha_2 q_{x+1} = 2AG\theta_x \tag{12}$$

UNIFORM DISTRIBUTION OF θ (PURE TORSION)

Consider a cantilever beam as shown in figure 4 loaded with a torque T at the tip. According to the St. Venant theory all cells of an intermediate section experience the same rate of twist. The cell twist θ_x is replaced by a constant twist θ, and equation (12) becomes

$$-\alpha_2 q_{x-1} + (\Sigma\alpha) q_x - \alpha_2 q_{x+1} = 2AG\theta \tag{13}$$

It is frequently found convenient in expressing the solution of a system of linear algebraic equations to introduce a symbol for the ratio of nondiagonal to diagonal coefficients. In the present case the following factor is useful:

$$d = \frac{\alpha_2}{\Sigma\alpha} \tag{14}$$

Methods for solving difference equations of the preceding type are given in references 1 and 2.

The solution of equation (13) may be expressed in terms of exponential or hyperbolic functions. The latter prove to be most convenient in the present case. The cells are considered to be numbered in a symmetrical manner as shown in figure 3(a). The complete solution of equation (13) may be expressed in the following form:

$$q_x = B \sinh \beta x + C \cosh \beta x + D \tag{15}$$

where

$$D = \frac{2AG\theta}{(1 - 2d)\Sigma\alpha} \tag{16}$$

and the section property β is defined by the equation

$$\cosh \beta = \frac{\Sigma\alpha}{2\alpha_2} = \frac{1}{2d} \tag{17}$$

This solution may be verified by direct substitution into the equation.

The first two terms form the general solution of the homogeneous equation. The last term is the particular integral.

The constants of integration, B and C, must be determined. Because of symmetry the coefficient of the antisymmetrical term must be set equal to zero. Thus,

$$B = 0$$

and

$$q_x = C \cosh \beta x + D \tag{18}$$

In order to determine the second constant of integration, it is necessary to define a boundary condition. This boundary condition may be determined by considering the end cell (nth cell) of a section as shown in figure 5. The shear flow in the top and bottom walls is q_n. A corner element of the wall has been illustrated by cross-hatching at the top and bottom of the end wall. In order that these corner elements shall be in equilibrium in the axial direction, the shear flow in the end wall must also have the value q_n. An imaginary cell may now be considered as shown by the dashed lines in figure 5. This cell would be numbered $n + 1$. In order that the corner elements remain in equilibrium, the shear flow in the imaginary cell must be equal to zero. This may also be conveniently stated as the condition for preserving continuity of shear flow around the exterior corner of the cross section. The assumption of zero shear flow in the imaginary cell corresponds to the zero value of Prandtl's stress function at the edge of a solid member in torsion. The boundary condition is given by the equation

$$q_{n+1} = 0 \tag{19}$$

This boundary condition was made known to the author by M. A. Biot of Brown University. The constant of integration is determined by writing equation (18) for the imaginary cell. Thus,

$$C \cosh \beta (n + 1) + D = 0$$

or

$$C = \frac{-D}{\cosh \beta (n + 1)} \tag{20}$$

Substitution of equation (20) in equation (18) gives the solution

$$q_x = D\left[1 - \frac{\cosh \beta x}{\cosh \beta (n + 1)}\right] \qquad (x = 0, 1, 2, \ldots) \tag{21}$$

When there is an even number of cells, they must be numbered as shown in figure 3(b). This peculiar numbering is necessary in order to preserve the finite difference of unity between adjacent cells through the plane of symmetry. The boundary condition is that $q_{n+\frac{1}{2}}$ be equal to zero. The resulting solution is

$$q_x = D\left[1 - \frac{\cosh \beta x}{\cosh \beta\left(n + \frac{1}{2}\right)}\right] \qquad \left(x = \frac{1}{2}, \frac{3}{2}, \frac{5}{2}, \ldots\right) \tag{22}$$

A graph of the shear flows is shown in figure 4(c) for a seven-cell member. The graph may be regarded as a section through the Prandtl stress surface. The ordinates to the steps, or plateaus of the stress surface, are the cellular shear flows. The cells have been considered to be square with the same thickness for all wall segments. Thus,

$$t_1 = t_2$$

and

$$l_1 = l_2$$

and consequently

$$d = 0.25$$

$$\cosh \beta = 2$$

$$\beta = 1.317$$

The magnitudes of these shear flows are as follows:

q_0	q_1	q_2	q_3
0.990D	0.979D	0.928D	0.732D

LINEAR DISTRIBUTION OF θ (BEAM BENDING)

Consider the cantilever beam of figure 6(a) as being acted upon by a tip load W. It has been shown by Goodier (reference 3) that the St. Venant bending theory leads to the conclusion that cell twists at an intermediate section have an antisymmetrical linear distribution. The corresponding shear flows form a completely self-equilibrating system. The cell twists that arise are associated with the pronounced anticlastic shape of the deflection surface which occurs in wide beams of shallow depth.

The cell twist may be expressed as a linear function of x, that is,

$$\theta_x = -kx \tag{23}$$

Reference 3 shows that the constant k, for beam bending, can be expressed as

$$k = \frac{\mu W l_1}{EI_X} \tag{24}$$

The values of Poisson's ratio μ and Young's modulus E are assumed to be the same for all wall elements. The moment of inertia of the total beam cross section is indicated as I_X.

The difference equation (equation (12)) becomes

$$-\alpha_2 q_{x-1} + (\Sigma\alpha) q_x - \alpha_2 q_{x+1} = -2AGkx \tag{25}$$

The general solution is given by

$$q_x = B \sinh \beta x + C \cosh \beta x + Fx \tag{26}$$

where

$$F = \frac{-2AGk}{(1 - 2d)\Sigma\alpha} \tag{27}$$

and β is defined by equation (17). Since the solution must be anti-symmetrical,

$$C = 0$$

and

$$q_x = B \sinh \beta x + Fx \tag{28}$$

The boundary condition must again be a vanishing of the shear flow in an imaginary exterior end cell. Thus,

$$q_{n+1} = 0 \tag{29}$$

Therefore, equation (26) becomes

$$q_x = F\left[x - \frac{(n + 1)\sinh \beta x}{\sinh \beta(n + 1)}\right] \qquad (x = 0, 1, 2, \ldots) \tag{30}$$

A solution of this type was given in reference 3 but differed somewhat because of the different boundary condition in the example considered.

A graph of these shear flows is shown in figure 6(c). The magnitudes of the shear flows for a seven-cell section, with square cells and constant wall thickness, are as follows:

q_0	q_1	q_2	q_3
0	0.928F	1.711F	1.918F

SINE DISTRIBUTION OF θ

Several solutions will now be given for cell twist distributions to which no immediate physical significance can be attached. These solutions are given in a brief manner to illustrate the mathematical methods that may be used to determine shear flows in terms of cell twists. Distributions are chosen which appear to have the most promise of being useful in the development of a general theory of multicell sandwich plates. Since the twist function for a homogeneous, isotropic, elastic plate has a sinusoidal variation across the plate in certain natural buckle modes, a sine distribution of θ may be of some usefulness in the analysis of multicell sandwich sections.

Consider a sandwich section numbered as shown in figure 3(a). Assume the cell-twist distribution to be given by the following formula:

$$\theta_x = \alpha \sin \frac{\pi x}{2(n + 1)} \tag{31}$$

The general solution of the difference equation (equation (12)) becomes

$$q_x = B \sinh \beta x + C \cosh \beta x + b \sin \frac{\pi x}{2(n + 1)} \tag{32}$$

where

$$b = \frac{2AGa}{\left[1 - 2d \cos \frac{\pi}{2(n + 1)}\right] \Sigma\alpha} \tag{33}$$

and β is defined by equation (17).

When the condition of antisymmetry and the boundary condition are introduced, the solution becomes

$$q_x = b\left[\sin\frac{\pi x}{2(n + 1)} - \frac{\sinh \beta x}{\sinh \beta(n + 1)}\right] \tag{34}$$

The formula has been evaluated for a seven-cell member with square cells and equal wall thicknesses. Graphs of the cell-twist and shear-flow distributions are shown in figures 7(b) and 7(c). A dashed line is drawn through the graphs at the centers of the cells to indicate the general distribution of the functions over the section. These continuous distributions are superimposed in figure 7(d) to indicate the difference in the distributions. The magnitudes of the cell twists and the shear flows are as follows:

θ_0	θ_1	θ_2	θ_3
0	0.383a	0.707a	0.924a

q_0	q_1	q_2	q_3
0	0.365b	0.635b	0.653b

CHARACTERISTIC DISTRIBUTION OF θ

When the static load distribution acting on a structure causes displacements such that the load and displacement are proportional at every point, the loads and displacements may be called characteristic loads and characteristic displacements. This designation was introduced in reference 4. The concept and designation may be applied to internal or external forces and displacements of a general nature. Arbitrary distributions of functions may oftentimes be conveniently expressed in terms of a series of characteristic distributions. Hence, it becomes desirable to establish the characteristic-displacement functions that may be associated with a given type of structure. In the present case, characteristic distributions of θ_x and q_x may be found by assuming

$$\theta_x = \lambda q_x \tag{35}$$

The difference equation (equation (12)) becomes

$$-\alpha_2 q_{x-1} + (\Sigma\alpha - 2AG\lambda)q_x - \alpha_2 q_{x+1} = 0 \tag{36}$$

The solution of this homogeneous equation is given by

$$q_x = a \sin \gamma x + b \cos \gamma x \tag{37}$$

The solution must be assumed in terms of circular, rather than hyperbolic, functions in order to be able to satisfy the boundary conditions. Substitution of this solution into equation (36) gives the following relation between γ and λ:

$$\begin{aligned}\lambda &= \frac{1}{2AG}\left(\Sigma\alpha - 2\alpha_2 \cos \gamma\right) \\ &= \frac{\Sigma\alpha}{2AG}\left(1 - 2d \cos \gamma\right)\end{aligned} \tag{38}$$

Either term in the solution as given by equation (37) can be made to satisfy the boundary conditions by an appropriate choice of the coordinate system. It will be assumed that the cells are numbered from 1 to n, from left to right, as shown in figure 3(c). The first term can be made to satisfy the boundary conditions alone by a correct choice of γ. Hence, the coefficient of the second term may be set equal to zero to give

$$b = 0$$

and

$$q_x = a \sin \gamma x \tag{39}$$

The boundary condition gives

$$q_{n+1} = a \sin \gamma (n + 1) = 0 \tag{40}$$

All functions connected with the problem are completely defined by n numbers. Hence the functions are said to exist in an n-point space. In such a space there is nothing of a useful nature to be gained by defining more than n distinct values of characteristic numbers such as γ or λ. There are n distinct values of γ less than π which will bring about compliance with the boundary conditions as stated by equation (40). The distinct values of γ and λ may be indicated as γ_k and λ_k. They are given by

$$\gamma_k = \frac{k\pi}{n + 1} \qquad (k = 1, 2, 3, \ldots n) \tag{41}$$

$$\lambda_k = \frac{\Sigma\alpha}{2AG}\left(1 - 2d \cos \frac{k\pi}{n + 1}\right) \tag{42}$$

A characteristic distribution of θ and the resulting distribution of q are thus given by

$$\theta_x = a_k \sin \frac{k\pi x}{n + 1} \qquad (k = 1, 2, \ldots n) \tag{43}$$

$$q_x = \frac{a_k}{\lambda_k} \sin \frac{k\pi x}{n + 1} \qquad (k = 1, 2, \ldots n) \tag{44}$$

In equation (44) the ratio a_k/λ_k has taken the place of the coefficient a in equation (39).

ARBITRARY DISTRIBUTION OF θ

The n formulas represented by equation (43) or equation (44) define a closed orthogonal set of functions for an n-point space. Any arbitrary function may be represented by a finite Fourier series using these functions. If θ_x is an arbitrary distribution of the cell twists, it may be expressed as

$$\theta_x = \sum_{k=1}^{n} a_k \sin \frac{k\pi x}{n + 1} \qquad (x = 1, 2, \ldots n) \tag{45}$$

The Fourier coefficients a_k remain to be determined. From equation (44) it is seen that the solution for shear flows is given by

$$q_x = \sum_{k=1}^{n} \frac{a_k}{\lambda_k} \sin \frac{k\pi x}{n + 1} \qquad (x = 1, 2, \ldots n) \tag{46}$$

This equation gives immediately the shear-flow distribution if the coefficients a_k for the cell twists are known. Equations (45) and (46) illustrate the fact that, in general, θ and q are not proportional functions. Although the individual terms of the two series are proportional, the sums of two such series are, in general, not proportional.

The formula for the Fourier coefficients may be conveniently developed by using matrix algebra. Equation (45) represents a system of n equations defining a linear relationship between the θ_x values and the a_k values. In matrix form this system is written as

$$[\theta] = [S]\ [a] \tag{47}$$

In this equation $[\theta]$ and $[a]$ are column vectors (column matrices)

containing θ_x and a_k values. The square matrix $[S]$ contains sine functions defined by

$$[S] = [s_{xk}]$$

$$s_{xk} = \sin \frac{k\pi x}{n + 1} \tag{48}$$

Consideration of the elements of $[S]$ shows it to be a symmetrical matrix having columns which are orthogonal vectors, each having a norm of $\frac{n + 1}{2}$. Consequently, when $[S]$ is multiplied by itself, a scalar matrix is obtained. Thus,

$$[S][S] = \frac{n + 1}{2}[I] \tag{49}$$

where $[I]$ is the identity matrix. The validity of equation (49) depends upon the orthogonality of the columns of $[S]$. This orthogonality is expressed in scalar form by the equation

$$\left.\begin{aligned} \sum_{x=1}^{n} \sin \frac{i\pi x}{n + 1} \sin \frac{j\pi x}{n + 1} &= \frac{n + 1}{2} \qquad (i = j) \\ \sum_{x=1}^{n} \sin \frac{i\pi x}{n + 1} \sin \frac{j\pi x}{n + 1} &= 0 \qquad (i \neq j) \end{aligned}\right\} \tag{50}$$

This formula corresponds to the better known formula for the orthogonality of continuous functions.

Multiplying through equation (47) by $[S]$ gives

$$\begin{aligned} [S][\theta] &= [S][S][a] \\ &= \frac{n + 1}{2}[a] \end{aligned} \tag{51}$$

or

$$[a] = \frac{2}{n + 1}[S][\theta] \tag{52}$$

The matrix equation may be expressed in scalar form to give

$$a_k = \frac{2}{n + 1} \sum_{x=1}^{n} \theta_x \sin \frac{k\pi x}{n + 1} \tag{53}$$

For any distribution of θ_x equation (53) gives the corresponding Fourier coefficients. These coefficients are then substituted into equation (46) to obtain the solution for shear flows.

Since the shear flows are related linearly to the Fourier coefficients, which in turn are related linearly to the cell twists, there must be a linear relation between the shear flows and cell twists. This relation may be derived and, thus, the necessity of computing Fourier coefficients may be avoided. The development of the relation may be most conveniently performed with matrix algebra.

Equations (45) and (46) define two systems of equations between which the a_k values can be eliminated to obtain a single system relating θ_x and q_x. Equation (45) has been expressed in matrix form as equation (47). In order to write equation (46) in matrix form, it is necessary to define the diagonal matrix $[\Lambda]$ as

$$[\Lambda] = \begin{bmatrix} \lambda_1 & 0 & \cdots & 0 \\ 0 & \lambda_2 & \cdots & 0 \\ \cdots & \cdots & \cdots & \cdots \\ 0 & 0 & \cdots & \lambda_m \end{bmatrix} \tag{54}$$

Equation (46) may be written in the following matrix form:

$$[q] = [S]\,[\Lambda]^{-1}\,[a] \tag{55}$$

The reciprocal of a diagonal matrix is obtained by merely inverting the individual diagonal elements.

Between equations (47) and (55) the column vector $[a]$ may be easily eliminated. Solving equation (47) for $[a]$ gives equation (52). Substituting into equation (55) gives

$$[q] = \frac{2}{n+1}\,[S]\,[\Lambda]^{-1}\,[S]\,[\theta'] \tag{56}$$

For a given number of cells the matrix $[S]$ is a standard universal matrix while the structural dimensions enter into the diagonal matrix $[\Lambda]$. The relative distribution of shear flows is dependent only on the relative aspect ratio of an internal wall segment as defined by the factor d. The solution given in equation (56) may be regarded as a general solution of the system of difference equations that govern the shear flows. Further discussion of a similar difference problem from this viewpoint has been given in reference 5.

As a numerical example, consider a section of four square cells with all wall thicknesses equal. The factor d equals 0.25 and n equals 4. The matrices $[S]$ and $[\Lambda]$ become

$$[S] = \begin{bmatrix} 0.5878 & 0.9511 & 0.9511 & 0.5878 \\ 0.9511 & 0.5878 & -0.5878 & -0.9511 \\ 0.9511 & -0.5878 & -0.5878 & 0.9511 \\ 0.5878 & -0.9511 & 0.9511 & -0.5878 \end{bmatrix} \tag{57}$$

$$[\Lambda] = \frac{\Sigma\alpha}{2AG} \begin{bmatrix} 0.5955 & 0 & 0 & 0 \\ 0 & 0.8455 & 0 & 0 \\ 0 & 0 & 1.1545 & 0 \\ 0 & 0 & 0 & 1.4045 \end{bmatrix} \tag{58}$$

Substitution of these matrices into equation (56) gives

$$\begin{bmatrix} q_1 \\ q_2 \\ q_3 \\ q_4 \end{bmatrix} = \frac{4AG}{5\Sigma\alpha} \begin{bmatrix} 2.6796 & 0.7178 & 0.1914 & 0.0479 \\ 0.7178 & 2.8711 & 0.7657 & 0.1914 \\ 0.1914 & 0.7657 & 2.8711 & 0.7178 \\ 0.0479 & 0.1914 & 0.7178 & 2.6796 \end{bmatrix} \begin{bmatrix} \theta_1 \\ \theta_2 \\ \theta_3 \\ \theta_4 \end{bmatrix} \tag{59}$$

For any given cell twists the shear flows may be immediately computed.

It is possible to reduce the matrices to approximately half size in analyzing for arbitrary cell-twist distribution by taking advantage of the symmetry of the structure. The twist distribution may be divided into symmetrical and antisymmetrical parts. Separate matrix formulas, such as equation (56), may be established for each part. The symmetrical and antisymmetrical parts of the shear-flow distribution would then be determined separately.

TORSION-CONSTANT FORMULA

By the use of the formulas that have been previously developed for shear flows in pure torsion, it is possible to derive a formula for the torsion constant for a multicell sandwich section. (The author is indebted

to M. A. Biot for assistance in the development of this formula.) The torsion constant may be introduced by expressing the relationship between section torque of a beam and rate of twist at that section as

$$T = GJ\theta \tag{60}$$

where G is the shear modulus of elasticity and J is the torsion constant. Consider a section with an odd number of cells numbered symmetrically as shown in figure 3(a). The total torque acting on a section is equal to twice the volume beneath the stress surface and hence is given by

$$T = 2A\sum_{-n}^{n} q_x \tag{61}$$

The formula for shear flow, as given by equation (21), may be substituted into equation (61); thus,

$$\begin{aligned} T &= 2AD\sum_{-n}^{n}\left[1 - \frac{\cosh \beta x}{\cosh \beta(n + 1)}\right] \\ &= 2(2n + 1)AD - \frac{2AD}{\cosh \beta(n + 1)}\sum_{-n}^{n} \cosh \beta x \end{aligned} \tag{62}$$

The summation contained in the second term must be evaluated. For this purpose it may be separated as follows:

$$\sum_{-n}^{n} \cosh \beta x = \sum_{-n}^{-1} \cosh \beta x + 1 + \sum_{1}^{n} \cosh \beta x \tag{63}$$

Introducing exponential functions gives

$$\sum_{-n}^{-1} \cosh \beta x = \frac{1}{2}\sum_{-n}^{-1} \left(e^{\beta x} + e^{-\beta x}\right) \tag{64a}$$

$$\sum_{1}^{n} \cosh \beta x = \frac{1}{2}\sum_{1}^{n} \left(e^{\beta x} + e^{-\beta x}\right) \tag{64b}$$

Formulas (64a) and (64b) may be regarded as finite geometric power series in e^{β} or $e^{-\beta}$. The following known formula may be used:

$$\sum_{1}^{n} a^x = \frac{a\left(1 - a^n\right)}{1 - a} \tag{65}$$

From this formula it is seen that

$$\sum_{1}^{n} \cosh \beta x = \sum_{-n}^{-1} \cosh \beta x$$

$$= \frac{1}{2}\left[\frac{e^{\beta}\left(1 - e^{n\beta}\right)}{1 - e^{\beta}} + \frac{e^{-\beta}\left(1 - e^{-n\beta}\right)}{1 - e^{-\beta}}\right] \tag{66}$$

Substitution in equation (63) gives

$$\sum_{-n}^{n} \cosh \beta x = 1 + \frac{e^{\beta}\left(1 - e^{n\beta}\right)}{1 - e^{\beta}} + \frac{e^{-\beta}\left(1 - e^{-n\beta}\right)}{1 - e^{-\beta}} \tag{67}$$

This formula may be condensed as follows:

$$\sum_{-n}^{n} \cosh \beta x = 1 + \frac{e^{\beta/2}\left(1 - e^{n\beta}\right)}{e^{-\beta/2} - e^{\beta/2}} + \frac{e^{-\beta/2}\left(1 - e^{-n\beta}\right)}{e^{\beta/2} - e^{-\beta/2}}$$

$$= \frac{e^{\left(n+\frac{1}{2}\right)\beta} - e^{-\left(n+\frac{1}{2}\right)\beta}}{e^{\beta/2} - e^{-\beta/2}}$$

$$= \frac{\sinh (2n + 1)\frac{\beta}{2}}{\sinh \frac{\beta}{2}} \tag{68}$$

This formula may now be substituted into equation (62) to give

$$T = 2(2n + 1)AD - \frac{2AD \sinh (2n + 1)\frac{\beta}{2}}{\cosh (n + 1)\beta \sinh \frac{\beta}{2}}$$

$$= 2(2n + 1)AD\phi(\beta,n) \tag{69}$$

where

$$\phi = 1 - \frac{\sinh \left(2n + 1\right)\frac{\beta}{2}}{(2n + 1) \cosh (n + 1)\beta \sinh \frac{\beta}{2}} \tag{70}$$

For calculation purposes it is somewhat more convenient to express ϕ in the following equivalent form:

$$\phi = 1 - \frac{2 \sinh\left(n + \frac{1}{2}\right)\beta}{(2n + 1)\left[\sinh\left(n + \frac{3}{2}\right)\beta - \sinh\left(n + \frac{1}{2}\right)\beta\right]} \tag{71}$$

Substitution of the formula for D from equation (16) into equation (69) gives

$$T = \frac{4(2n + 1)A^2 G\theta\phi(\beta,n)}{(1 - 2d)\Sigma\alpha} \tag{72}$$

This formula may be substituted into equation (60). Dividing out the factors $G\theta$ gives the following formula for the torsion constant:

$$J = \frac{4(2n + 1)A^2\phi(\beta,n)}{(1 - 2d)\Sigma\alpha} \tag{73}$$

It is convenient to introduce the torsion-constant formula for a single cell as given by

$$J_1 = \frac{4A^2}{\Sigma\alpha} \tag{74}$$

If K is the number of cells $(K = 2n + 1)$, the torsion constant for a section having K cells is given by

$$J_K = KJ_1\left[\frac{\phi(\beta,n)}{1 - 2d}\right] \tag{75}$$

Since β is determined when d is known, as shown by equation (17), ϕ may be regarded as a function of d and K rather than β and n. Thus, it becomes convenient to introduce $\psi(d,K)$ as

$$\psi(d,K) = \frac{\phi(\beta,n)}{1 - 2d} = \frac{\phi(d,K)}{1 - 2d} \tag{76}$$

The torsion constant becomes

$$J_K = KJ_1\psi(d,K) \tag{77}$$

The function ψ is shown graphically in figure 8 for a section having $d = 0.25$.

CONCLUSIONS

Formulas have been developed in explicit form for the shear flows in multicell sandwich beams in bending and torsion. Formulas have also been developed for the shear flows corresponding to various functional chordwise distributions of the cell twists and, in scalar or matrix form, for the shear flows corresponding to an arbitrary chordwise twist distribution. A formula for the torsion constant of a multicell sandwich beam has also been developed.

Langley Aeronautical Laboratory
National Advisory Committee for Aeronautics
Langley Field, Va., September 9, 1948

REFERENCES

1. Von Kármán, Theodore, and Biot, Maurice A.: Mathematical Methods in Engineering. First ed., McGraw-Hill Book Co. Inc., 1940.

2. Bleich, Fr., and Melan, E.: Die gewöhnlichen und partiellen Differenzengleichungen der Baustatik. Julius Springer (Berlin), 1927.

3. Goodier, J.N.: A Theorem on the Shearing Stress in Beams with Applications to Multicellular Sections. Jour. Aero. Sci., vol. 11, no. 3, July 1944, pp. 272-280.

4. Wilbur, John B.: Characteristic Redundants Used for Analyzing Statically Indeterminate Structures. Proc. A.S.C.E., vol. 70, no. 6, June 1944, pp. 829-851.

5. Benscoter, S. U.: Orthogonal Functions Used in the Solution of Linear Difference Problems. Jour. Appl. Mech., vol. 13, no. 4, Dec. 1946, pp. A-281 - A-283.

(a) Sandwich section.

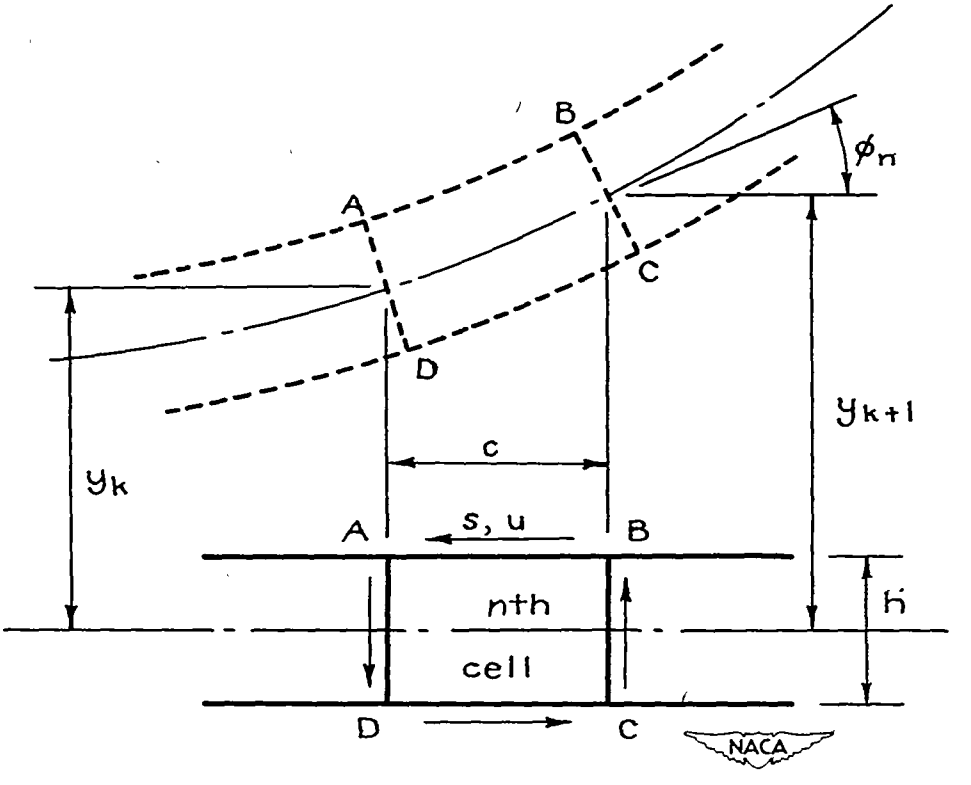

(b) nth cell of sandwich.

Figure 1.- Displacements of a single cell.

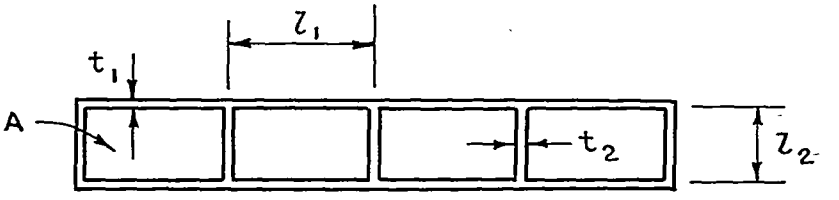

(a) Rectangular cells.

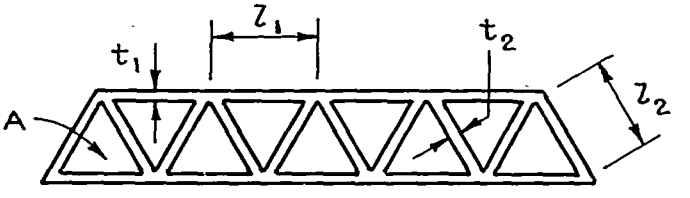

(b) Triangular cells.

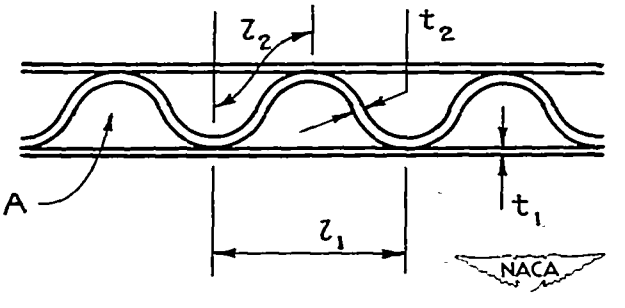

(c) Corrugated cells.

Figure 2.- Cell dimensions.

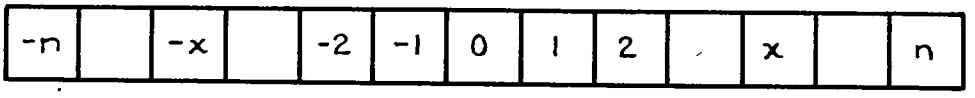

(a) Odd number of cells with symmetrical numbering.

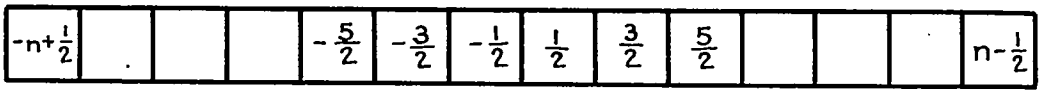

(b) Even number of cells with symmetrical numbering.

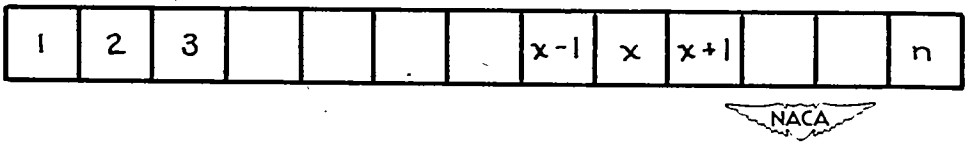

(c) Arbitrary number of cells with unsymmetrical numbering.

Figure 3.- Cell numbering.

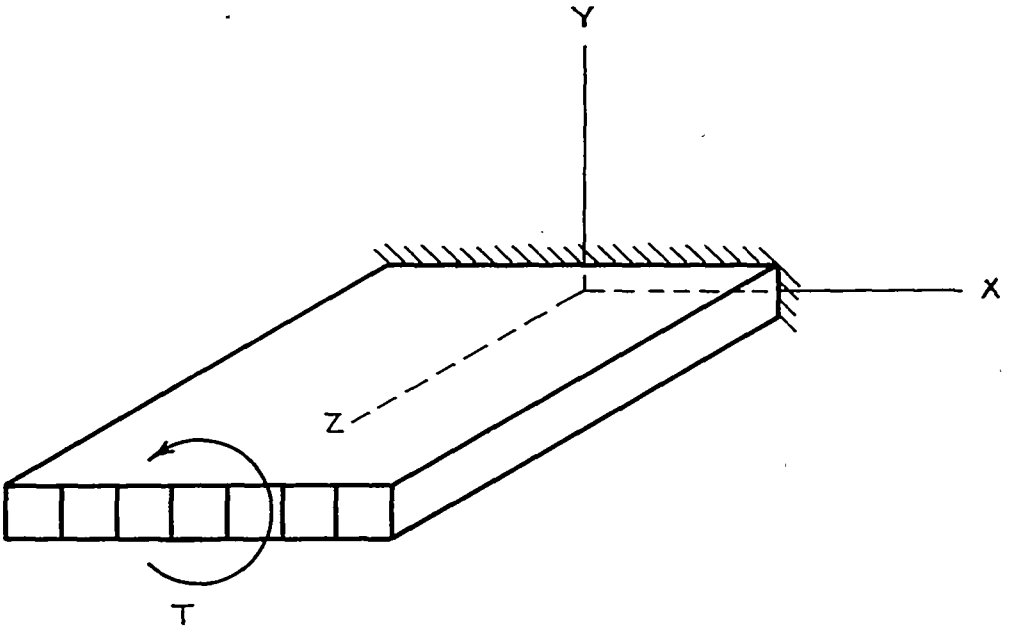

(a) Beam in torsion.

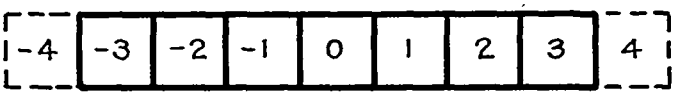

(b) Cell numbering.

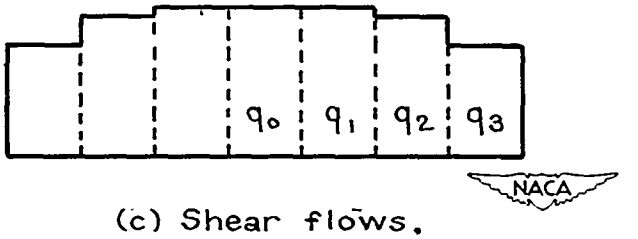

(c) Shear flows.

Figure 4.- Shear flows due to torsion.

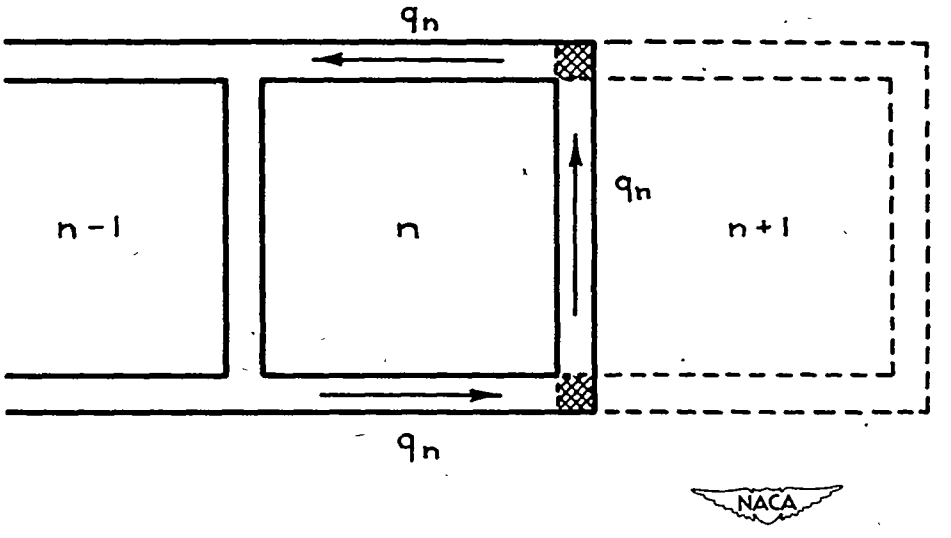

Figure 5.- Imaginary cell used in statement of boundary condition.

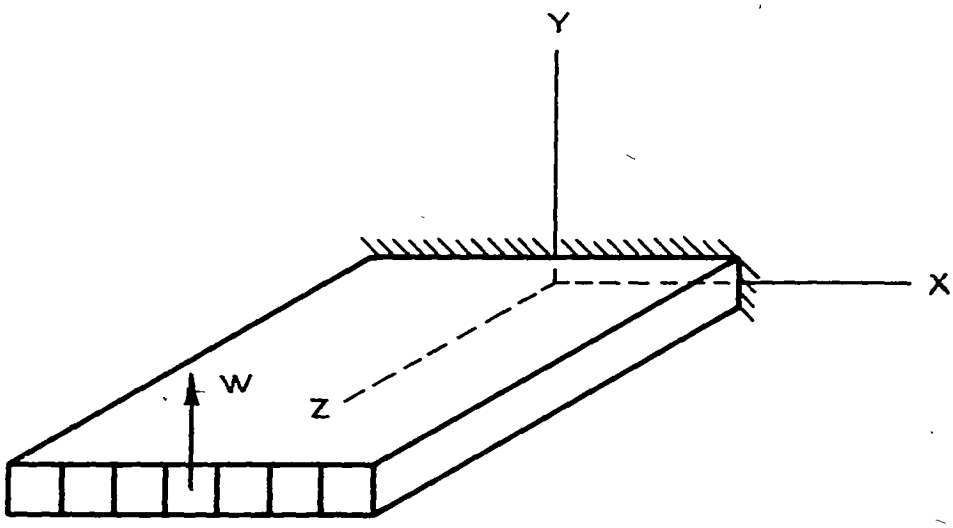

(a) Beam in bending.

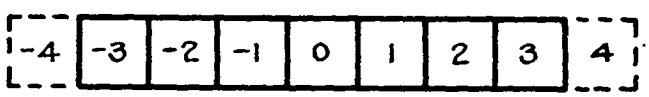

(b) Cell numbering.

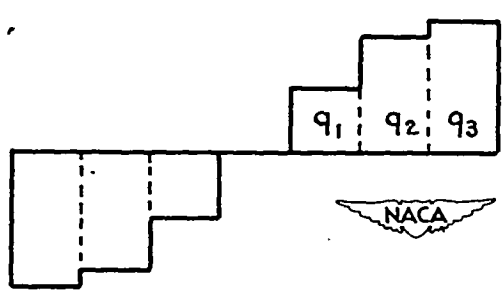

(c) Shear flows.

Figure 6.- Shear flows due to bending.

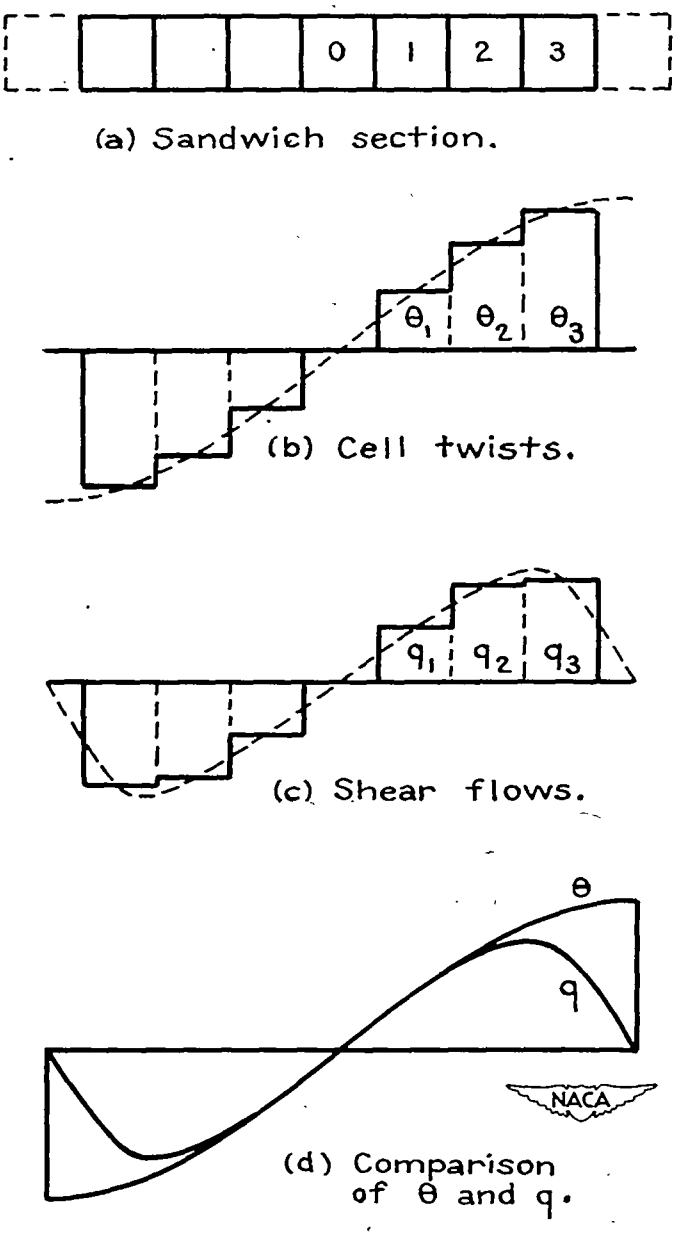

Figure 7.- Shear flows with a sine distribution of θ.

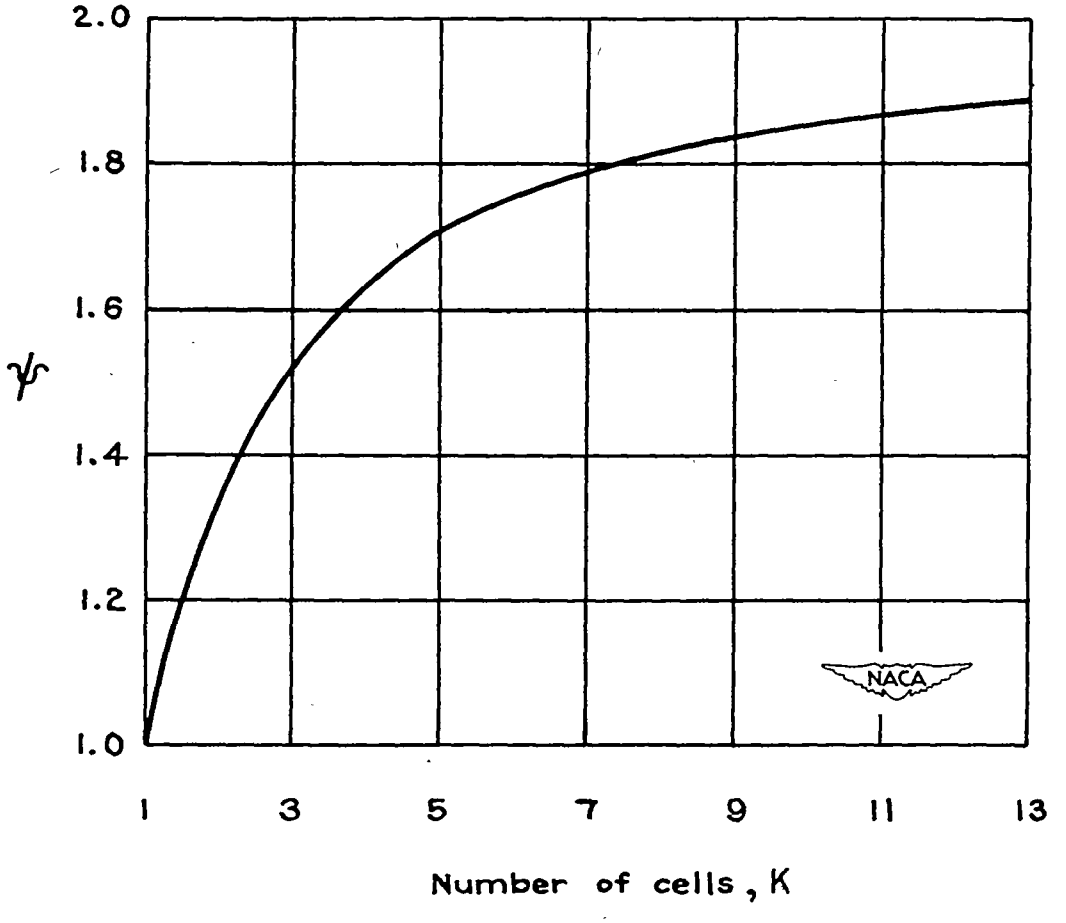

Figure 8.- Variation of ψ.