REPORT 927

CONTENTS

	Page
SUMMARY	123
INTRODUCTION	123
LONGITUDINAL STABILITY AND CONTROL CHARACTERISTICS IN STRAIGHT FLIGHT:	
STABILITY CHARACTERISTICS IN STRAIGHT FLIGHT	123
Requirements and Definitions	123
Methods of Obtaining Static Longitudinal Stability	124
Dynamic Longitudinal Stability	125
EFFECTS OF PROPELLER OPERATION AND POWER ON STABILITY	125
Single-Engine Airplanes	125
Multiengine Airplanes	127
Jet-Propelled Airplanes	128
CONTROL CHARACTERISTICS IN STEADY FLIGHT	128
DETERMINATION OF NEUTRAL POINTS FROM FLIGHT TESTS	131
Stick-Fixed Neutral Point	131
Stick-Free Neutral Point	131
EFFECTS OF COMPRESSIBILITY ON TRIM AND STABILITY	132
Effects of Compressibility on Various Airplane Components	132
Examples of Effects of Compressibility	133
Reasons for Compressibility Effects	133
Dive-Recovery Flaps	133
EFFECTS OF STRUCTURAL AND CONTROL-SURFACE DISTORTION ON LONGITUDINAL STABILITY	133
LONGITUDINAL TRIM CHANGES DUE TO POWER AND FLAPS	134
Requirement	134
Reasons for Trim Change with Flap and Power Condition	134
LANDING AND TAKE-OFF CHARACTERISTICS	134
Requirement for Landing Characteristics	134
Requirements for Take-Off Characteristics	135
Discussion of Ground Effect	135
LONGITUDINAL STABILITY AND CONTROL CHARACTERISTICS IN ACCELERATED FLIGHT:	
Relations between Longitudinal Stability in Straight and in Accelerated Flight	135
Calculation of Stick Forces in Accelerated Flight	136
Effects of pitching the whole airplane to a higher angle of attack	136
Effects of curvature of the flight path	136
Discussion of Factors Influencing Stick Forces in Accelerated Flight	137
Distinction between Turns and Pull-Ups	137
Requirements for Elevator Control in Accelerated Flight	137
Examples of Stick Force in Accelerated Flight on Different Types of Airplanes	137
Means of Obtaining Satisfactory Elevator Control Forces in Steady Maneuvers	137
Stick Forces in Rapid Pull-Ups	138
DISCUSSION OF TYPES OF CONTROL-SURFACE BALANCE:	
Importance of Control-Surface Balance	139
Plain Control Surface	139
Balance Characteristics	139
Overhanging or inset-hinge balance	139
Unshielded horn balance	139
Balancing tab	139
Beveled-trailing-edge balance	140
Sealed internal balance	140
Other types of control-surface balance	140
Comparison of Various Balancing Devices	140
DIRECTIONAL STABILITY AND CONTROL CHARACTERISTICS:	
DIRECTIONAL TRIM CHARACTERISTICS	141
Requirements	141
Directional Trim Characteristics for Single-Engine Airplanes	142
CHARACTERISTICS IN STEADY SIDESLIPS	144
Requirements	144
Directional stability and control characteristics in sideslips	144
Pitching moment due to sideslip	144
Side-force characteristics	144
Discussion of Equilibrium of an Airplane in a Steady Sideslip	144
Typical Deficiencies in Sideslip Characteristics	144
Contributions of Various Airplane Components to the Directional Stability	145
Directional stability of the fuselage	145
Propeller yawing moments	145
Wing yawing moments	146
Yawing moments from the vertical tail	146
Design Considerations for Prevention of Rudder Lock	146
Dihedral Effect	147
Requirements	147
Definition of effective dihedral	147
Influence of wing location, power, and sweepback on effective dihedral	147
Measurement of effective dihedral in flight	148
AILERON CONTROL CHARACTERISTICS:	
Requirements for Satisfactory Aileron Control	149
Typical Aileron Control Characteristics	149
Calculation of Rolling Effectiveness	150
Amount of Aileron Balance Required for Satisfactory Characteristics	151
Notes on Aileron Balance, Frise Ailerons, and Spoilers	152
Adverse Aileron Yaw	153
Requirement for Limits of Yaw due to Ailerons	153
Rolling Maneuvers in Accelerated Flight	153

924778—51——9

Page

STALLING CHARACTERISTICS:
Requirements for Satisfactory Stalling Characteristics 154
Discussion of Typical Stalling Characteristics 154
Influence of Various Design Factors on Stalling Characteristics 154
Flight Conditions Leading to Inadvertent Stalling 155
Ground Looping 155
CONTROL-FREE STABILITY OR SHORT-PERIOD OSCILLATIONS:
Requirements for Longitudinal Motion 155
Influence of Design Factors on Short-Period Longitudinal Oscillations 156
Requirements for Lateral Motion 156
Influence of Design Factors on Lateral Oscillations 156
Relation between Rudder, Aileron, and Elevator Short-Period Oscillations 157
WIND-TUNNEL TESTS AND CALCULATION PROCEDURES FOR DETERMINATION OF FLYING QUALITIES:
Introduction 157
Simulation of Power Conditions 157
Criterions of Similitude 157
Variation of Thrust in Flight 157
Calculation of the Variation of Thrust Coefficient with Lift Coefficient for a Specific Airplane 158

Page

WIND-TUNNEL TESTS AND CALCULATION PROCEDURES FOR DETERMINATION OF FLYING QUALITIES—Continued
Simulation of Power Conditions—Continued
Selection of Model Propeller Blade Angle 159
Preparation of Operating Charts 159
Simulation of Propeller-Idling Condition 159
Wind-Tunnel Tests for Landing and Take-Off Characteristics 160
Wind-Tunnel Tests Employing a Ground Board 160
Simulation of Power for Take-Off Condition 160
Wind-Tunnel Test Procedure for Take-Off Condition 160
Computation of Ground-Reaction Moments 160
Tricycle landing gear 160
Conventional landing gear 161
Determination of Neutral Points 161
Stick-Fixed Neutral Point 161
Stick-Free Neutral Point 162
CONCLUDING REMARKS CONCERNING SELECTION OF AIRPLANE CONFIGURATION TO SATISFY THE FLYING QUALITIES REQUIREMENTS 162
APPENDIX—SYMBOLS 163
REFERENCES 164

REPORT 927

APPRECIATION AND PREDICTION OF FLYING QUALITIES

By William H. Phillips

SUMMARY

The material given in this report summarizes some of the results of recent research that will aid the designers of an airplane in selecting or modifying a configuration to provide satisfactory stability and control characteristics. The requirements of the National Advisory Committee for Aeronautics for satisfactory flying qualities, which specify the important stability and control characteristics of an airplane from the pilot's standpoint, are used as the main topics of the report. A discussion is given of the reasons for the requirements, of the factors involved in obtaining satisfactory flying qualities, and of the methods used in predicting the stability and control characteristics of an airplane. This material is based on lecture notes for a training course for research workers engaged in airplane stability and control investigations.

INTRODUCTION

In recent years, extensive flight, wind-tunnel, and theoretical investigations of the stability and control characteristics of airplanes have led to an improved understanding of this subject and to better correlation between the results of these three research methods. The present report summarizes the more important aspects of this field of research and presents information that will aid the designers of an airplane in selecting or modifying a configuration to provide satisfactory stability and control characteristics. The material given in this report is based on lecture notes for a course, first given in 1942, that was intended to train research workers engaged in airplane stability and control investigations.

The flying qualities of an airplane are defined as the stability and control characteristics that have an important bearing on the safety of flight and on the pilots' impressions of the ease of flying an airplane in steady flight and in maneuvers. Most of the available knowledge of flying qualities has been obtained from flight tests made by the NACA since 1939 on approximately 60 airplanes of all types. In these tests, recording instruments were used to obtain quantitative measurements of control movements, control forces, and airplane motions while the pilots performed certain specified maneuvers. The results of many of these tests have been published as NACA Wartime Reports. Reference 1 is a typical example of this type of report. From the fund of information accumulated in these tests, it has been possible to prepare a set of requirements for satisfactory handling qualities in terms of quantities that may be measured in flight or predicted from wind-tunnel tests and theoretical analyses. When an airplane meets these requirements, the airplane is fairly certain to be safe to fly and to have desirable qualities from the pilot's standpoint.

Different sets of specifications for satisfactory handling characteristics have been prepared by various agencies as a result of the work done by the NACA. The requirements for satisfactory flying qualities stated in this report do not form a complete set and are not taken directly from any of the previously published specifications, but they include the more important requirements that should, in general, be met by all types of airplanes. For more complete flying-qualities specifications, references 2, 3, and 4 should be consulted.

The original lectures on wind-tunnel procedure and control-surface hinge-moment characteristics were prepared by Mr. I. G. Recant and Mr. T. A. Toll, respectively, and the corresponding sections of the present report were based upon the material prepared by these two members of the Langley Aeronautical Laboratory staff.

A list of symbols is included as an appendix.

LONGITUDINAL STABILITY AND CONTROL CHARACTERISTICS IN STRAIGHT FLIGHT

STABILITY CHARACTERISTICS IN STRAIGHT FLIGHT

REQUIREMENTS AND DEFINITIONS

An airplane is required to be statically longitudinally stable with stick fixed or free in flight conditions in which it is likely to be flown for long periods of time, and in the landing-approach and landing conditions. The meaning of this requirement is explained in the following sections. First, the concept of trim and the concepts of static and dynamic stability are considered.

An airplane is trimmed longitudinally in steady flight with stick fixed when it is in equilibrium, that is, when the resultant force on the airplane is zero and the pitching moment is zero. An airplane is trimmed in steady flight with stick free when, in addition to the above conditions, the stick force is zero. The methods of obtaining trim are to adjust the pitching moment to zero by means of the elevators and to adjust the stick force to zero by either a trim tab, an adjustable stabilizer, an auxiliary airfoil near the tail, or an adjustable spring in the control system. Of these devices, the trim tab is by far the most common.

In order to determine whether an airplane is stable, it first must be trimmed. Stability is related to the behavior of an airplane after it is disturbed slightly from the trimmed condition. Stability is referred to as stick-fixed or stick-free stability, depending upon whether the control is held fixed in its trim position after the disturbance or is left free. The behavior of an airplane after such a disturbance may consist of a divergence, a convergence, or an increasing or decreasing oscillation. The definition of static longitudinal

stability is expressed in terms of this behavior as follows: an airplane is statically longitudinally stable if, when disturbed slightly from a trimmed condition (by changing angle of attack or speed), it will initially tend to return to its trimmed condition. An airplane is statically unstable if, when it is disturbed slightly from the trimmed condition, it performs a divergence. The dynamic longitudinal stability may be defined as follows: an airplane is dynamically longitudinally stable if, after a disturbance, it performs a decreasing oscillation. An airplane is dynamically unstable if, after a disturbance, it performs an oscillation of increasing amplitude.

METHODS OF OBTAINING STATIC LONGITUDINAL STABILITY

An airplane will be statically longitudinally stable if, when the angle of attack is increased, the pitching moment acting on the airplane becomes negative, tending to return the airplane to its original angle of attack ($dC_m/d\alpha$ negative). If this condition is fulfilled, the airplane will also tend to return to its trim speed if the speed is changed. For example, if the speed is greater than the trim speed, corresponding to a lower angle of attack than that required for trim, the airplane will tend to pitch up to the trim angle of attack. As a result, it will go into a climb and the speed will decrease and tend to approach the trim speed.

An approximate theory of static longitudinal stability is given in order to show the effects of primary design features on the stability. In the following analysis, it is assumed that drag forces and propeller effects may be neglected. The theory derived under these assumptions applies approximately to the condition of gliding flight at low angles of attack. The theory given herein is not sufficiently complete for design purposes because the methods for determining the effects of the fuselage and idling propellers are not discussed. The methods presented in references 5 and 6 may be used to calculate the longitudinal stability of an airplane in the gliding condition for design purposes.

Any combination of aerodynamic bodies that have linear variations of lift and pitching moment with angle of attack (such as a wing and fuselage) may be shown to have an aerodynamic center. The aerodynamic center is defined as the point about which the pitching moment remains constant if the angle of attack is varied at a given airspeed. This constant moment is indicated by the symbol M_0.

The moments and vertical forces acting on the airplane are indicated in figure 1. The pitching moment about the center of gravity is

$$M=Lx'+M_0-L_Tl \tag{1}$$

By definition

$$L=C_LqS$$

$$C_L=\alpha\frac{dC_L}{d\alpha}$$

$$M=C_mqSc$$

Making these substitutions gives

$$M=\alpha\frac{dC_L}{d\alpha}qSx'+C_{m_0}qSc-\alpha_T\left(\frac{dC_L}{d\alpha}\right)_Tq_TS_Tl \tag{2}$$

but

$$\alpha_T=\alpha\left(1-\frac{d\epsilon}{d\alpha}\right)+i_T$$

The following equation may therefore be derived:

$$C_m=\frac{-\left[\alpha\left(1-\frac{d\epsilon}{d\alpha}\right)+i_T\right]\left(\frac{dC_L}{d\alpha}\right)_Tq_TS_Tl+\alpha\frac{dC_L}{d\alpha}qSx'+C_{m_0}qSc}{qSc} \tag{3}$$

This equation may be used to determine the tail incidence required for trim ($C_m=0$) at a given angle of attack for the simplified airplane under consideration. The degree of static longitudinal stability may now be obtained from the preceding expression by differentiating with respect to α. The value of $dC_m/d\alpha$ is:

$$\frac{dC_m}{d\alpha}=-\left(1-\frac{d\epsilon}{d\alpha}\right)\left(\frac{dC_L}{d\alpha}\right)_T\frac{q_TS_Tl}{qSc}+\frac{dC_L}{d\alpha}\frac{x'}{c} \tag{4}$$

From equation (4) a value may be found for x', the distance from the aerodynamic center to the center of gravity, such that $\frac{dC_m}{d\alpha}=0$.

The concept of neutral point may now be introduced because the neutral point is defined as the center-of-gravity location at which $\frac{dC_m}{d\alpha}=0$ when the airplane is trimmed ($C_m=0$). When the center of gravity is ahead of the neutral point, $dC_m/d\alpha$ is negative and the airplane is statically stable. When the center of gravity is behind the neutral point, the value of $dC_m/d\alpha$ is positive and the airplane is statically unstable.

The preceding equations for determining the neutral point with stick fixed can also be used to determine the neutral point with stick free by using a value for the slope of the lift curve of the tail corresponding to that obtained with the elevator free. If the elevator tends to float with the relative wind (that is, to float up when the angle of attack is increased positively), the lift effectiveness of the tail will be reduced

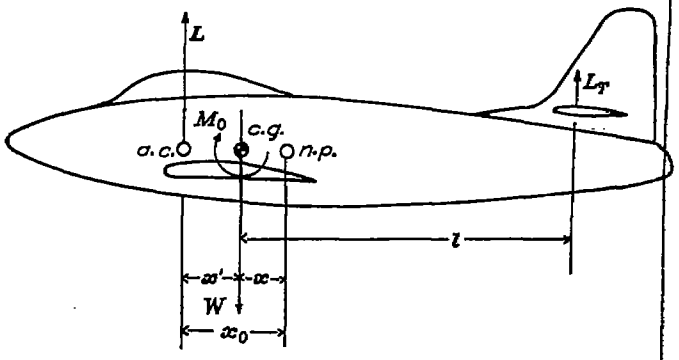

FIGURE 1.—Moments and vertical forces acting on an airplane in steady flight.

and the stick-free neutral point will be farther forward than the stick-fixed neutral point. If the elevator tends to float against the relative wind (that is, to float down when the angle of attack is increased positively as it may with certain types of aerodynamic balance), the lift effectiveness of the tail will be increased and the stick-free neutral point will be behind the stick-fixed neutral point.

The stability of an airplane is expressed in terms of various design parameters in formula (4). It is more convenient to transform this formula so that the center-of-gravity position is expressed in terms of its distance from the neutral point rather than from the aerodynamic center of the wing-fuselage combination. Solving equation (4) for the distance between the center of gravity and the aerodynamic center of the wing-fuselage combination yields

$$\frac{x'}{c}=\left(1-\frac{d\epsilon}{d\alpha}\right)\frac{\left(\frac{dC_L}{d\alpha}\right)_T}{\frac{dC_L}{d\alpha}}\frac{q_T S_T l}{qSc}+\frac{\frac{dC_m}{d\alpha}}{\frac{dC_L}{d\alpha}} \tag{5}$$

At the neutral point, $\frac{dC_m}{d\alpha}=0$; hence, the distance between the aerodynamic center of the wing-fuselage combination and the neutral point is

$$\frac{x_0}{c}=\left(1-\frac{d\epsilon}{d\alpha}\right)\frac{\left(\frac{dC_L}{d\alpha}\right)_T}{\frac{dC_L}{d\alpha}}\frac{q_T}{q}\frac{S_T}{S}\frac{l}{c} \tag{6}$$

As may be seen from figure 1, the distance between the center of gravity and the neutral point is obtained by subtracting equation (5) from equation (6). This procedure gives the result

$$\frac{x}{c}=-\frac{dC_m/d\alpha}{dC_L/d\alpha}$$

$$=-\frac{dC_m}{dC_L} \tag{7}$$

Formula (7) shows that the degree of stability is determined solely by the distance between the center of gravity and the neutral point. The distance between the center of gravity and the neutral point, expressed in percent of the mean aerodynamic chord, is frequently called the static margin. If, in the design of the airplane, the center-of-gravity location is considered to be variable, any degree of stability may be obtained by suitable location of the center of gravity, and the tail may then be designed simply from consideration of its ability to provide trim. On the other hand, if the center of gravity is fixed by other design considerations, stability must be obtained by providing a sufficiently rearward location of the neutral point. Formula (6) shows the design features of the airplane that may be changed to provide more rearward location of the neutral point. These possibilities include increasing the tail area, tail length, and tail aspect ratio.

Under the simplified assumptions of the preceding analysis, the pitching-moment coefficient varies linearly with angle of attack and, as a result, the neutral-point location is independent of angle of attack. These assumptions no longer hold in power-on flight or in flight near the stall where the drag is increasing or where appreciable flow separation may have set in. In these cases, the variation of pitching moment with angle of attack may be nonlinear and neutral-point location will be a function of angle of attack.

DYNAMIC LONGITUDINAL STABILITY

The position of the center of gravity with respect to the neutral point determines the static longitudinal stability but not the dynamic stability. Certain general relations exist, however, between the dynamic stability and the position of the center of gravity with respect to the neutral point. These relations are summarized in figure 2, which shows the behavior of an airplane following a disturbance, with stick fixed and free, with various center-of-gravity locations. This method of presentation is taken from a British report of limited availability by S. B. Gates, which gives a more complete discussion of these relations. The period of the phugoid, or long-period, oscillation referred to in figure 2 is so great that the damping of this oscillation has no correlation with the handling characteristics from the pilot's standpoint. (See reference 7.) The occurrence of an unstable or poorly damped short-period oscillation with the elevator free is, however, very objectionable and dangerous because of the rapidity with which large accelerations may build up. (See reference 8.)

The divergence that occurs with the center of gravity behind the neutral point is not violent but is generally a slow, easily controlled motion. Although this type of instability is not dangerous, it is objectionable to the pilot on a long flight because small corrections must be made continually to hold a given flight speed. It is also undesirable because of illogical control-force variations and stick movements that are required in changing the flight speeds. For these reasons, this type of instability is considered unacceptable for satisfactory handling qualities. (This difficulty will be discussed more fully in connection with control characteristics.)

EFFECTS OF PROPELLER OPERATION AND POWER ON STABILITY

SINGLE-ENGINE AIRPLANES

The following discussion applies primarily to propeller-driven aircraft, though some of the effects of power on jet-propelled aircraft are quite similar to those on propeller-driven aircraft.

The application of power introduces the following effects which change the pitching moments acting on the airplane:

(1) Moment of propeller axial force about center of gravity
(2) Moment of propeller normal force about center of gravity
(3) Increased angle of downwash

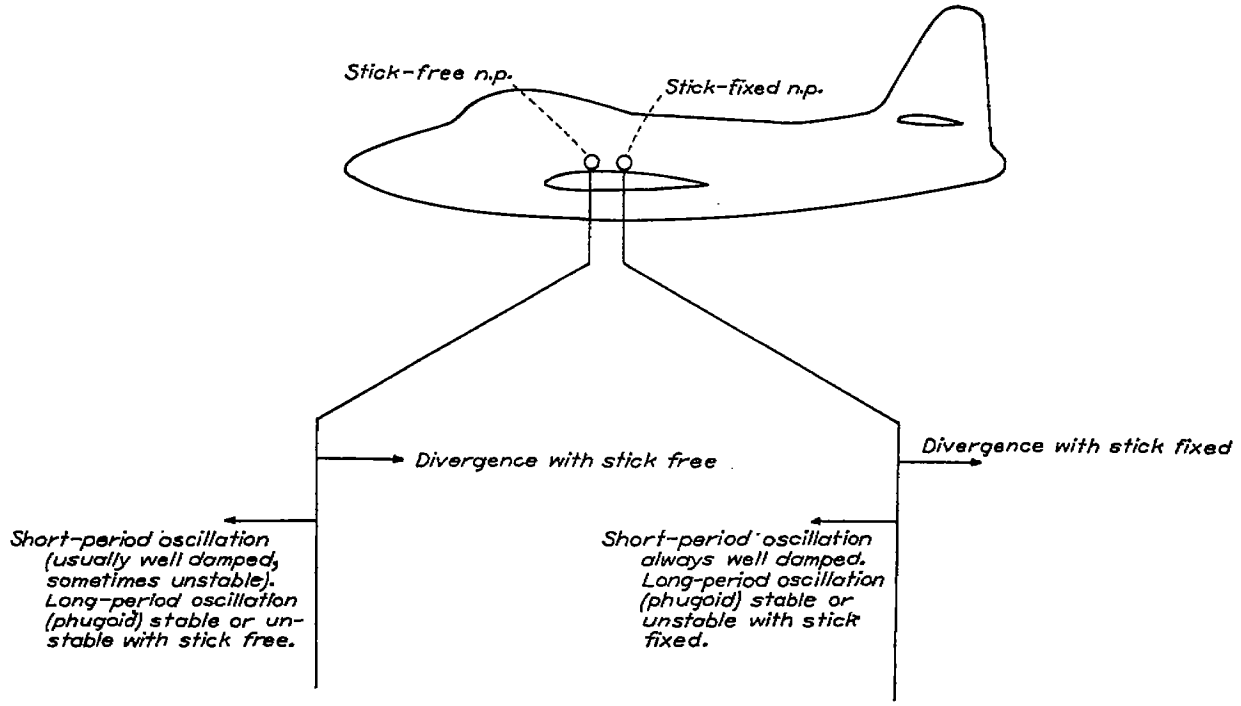

FIGURE 2.—Chart describing the dynamic longitudinal stability of an airplane as a function of center-of-gravity position. The arrows indicate location of center of gravity with respect to neutral point.

(4) Increased dynamic pressure at the tail
(5) Change in pitching moment of wing due to action of slipstream

These effects will cause a change in longitudinal trim of the airplane if the power is suddenly applied at a given speed. Since the longitudinal stability depends on the variation of pitching moment with angle of attack, the factors just listed will affect the stability if they vary in magnitude with the angle of attack. In steady flight, the propeller thrust coefficient varies and, as a result, all the related propeller effects vary with speed. The variation of propeller thrust coefficient with lift coefficient in steady flight is ordinarily similar to that shown in figure 3.

The moments of the direct propeller forces may be estimated from theoretical considerations or from experimental data given in various papers. A theoretical treatment of the propeller forces is given in reference 9. Because the thrust coefficient increases with lift coefficient, the moment coefficient caused by the axial force will increase with angle of attack. If the thrust line passes below the center of gravity, this effect will be destabilizing. The normal forces act on the propeller in a way similar to the force that would act on a small wing at the same location as the propeller. For a propeller located ahead of the center of gravity, the propeller normal force will therefore give an appreciable destabilizing effect.

The effects of the downwash and increased dynamic pressure in the slipstream on the pitching moments contributed by the wing and horizontal tail surface are difficult to estimate from theoretical considerations. For this reason, tests of powered models are normally used to predict the stability characteristics of an airplane in the power-on condition. Some general statements as to the effects of power on the moments contributed by the wing and tail may, however, be made.

The increment in dynamic pressure in the slipstream caused by propeller operation increases linearly with thrust coefficient. If the tail is required to carry a down load for trim (as for example, to offset the wing pitching moment with flaps down), the positive pitching-moment coefficient given by the tail located in the slipstream will increase as the angle of attack of the airplane increases, and a destabilizing effect will result. In extreme cases, the tail may actually decrease the static longitudinal stability in power-on flight.

Because of the increased normal force on the propeller with application of power, the slipstream is deflected downward and thereby causes an increased downwash over the tail. Also, with power on, the slipstream increases the lift of the section of the wing that it covers. The downwash in the slipstream, therefore, generally increases with angle of attack more rapidly than the downwash outside the slipstream. As a result, the factor $1-\frac{d\epsilon}{d\alpha}$ that occurs in the formula for the stability contributed by the horizontal tail is reduced and the stability of the airplane with power on is decreased.

If the tail is carrying a down load and comes into the high-velocity region of the slipstream as the angle of attack increases, the positive pitching-moment coefficient contributed by the tail will increase with angle of attack and a destabilizing effect will result. For this reason, the horizontal tail surfaces of some airplanes have been located near the top of the vertical tail in order to avoid entering the slipstream at high angles of attack.

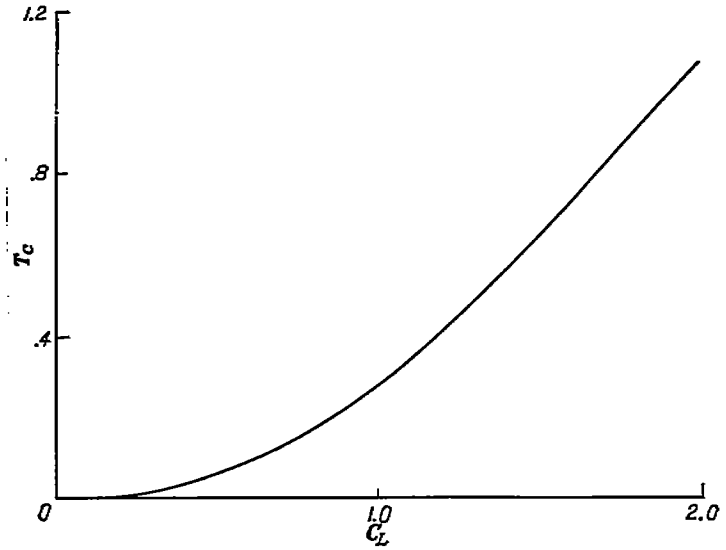

FIGURE 3.—Typical variation of propeller thrust coefficient T_c with lift coefficient in steady flight. $T_c=\frac{T}{\rho V^2 D^2}$.

Though the effects of power on the longitudinal stability of single-engine airplanes cannot be predicted in a completely rational manner, attempts have been made to devise semiempirical methods that will yield fairly accurate results. The method given in reference 10 may be used for design purposes.

MULTIENGINE AIRPLANES

The effects of power on the longitudinal stability of twin-engine or multiengine airplanes are similar to those on single-engine airplanes, but certain additional effects that depend on the mode of rotation of propellers are introduced. If the propellers rotate in opposite directions, changes in downwash over the horizontal tail will be introduced by the slipstream rotation. This effect is most marked in the case of twin-engine airplanes, because in most cases the span of the horizontal tail does not extend far beyond the center lines of the two propellers. The downwash behind the inboard portions of the propeller disks will have a predominant effect on the angle of attack of the tail.

Experiments have shown that in the flap-up condition of flight the rotation of the slipstream behind the propeller continues in the same direction after the slipstream has passed over the wing. If the propellers rotate in opposite directions with the blades moving up in the center, the slipstream rotation will cause an increment of upwash at the tail that will increase in strength as the speed is decreased because of the resulting increase in torque coefficient. This upwash at the tail will cause a negative pitching-moment increment that increases with increasing angle of attack; therefore, a stabilizing effect will result. Conversely, if the propellers rotate in opposite directions with the blades moving down in the center, an additional downwash at the tail will be produced resulting in a destabilizing effect. Figure 4 illustrates these conclusions.

Experiments have shown that with flaps down the direction of slipstream rotation is reversed after the slipstream has passed over the wing. (See reference 11.) As a result, the effects on stability discussed for the flap-up condition may be reversed in a flap-down condition of flight. In some cases, in which tests show that the stability of a twin-engine airplane may be different with flaps up or down, the mode of propeller rotation may be changed to utilize these stability effects; for example, if the stability is satisfactory with flaps up but deficient with flaps down, the stability with flaps down might possibly be improved by using propellers that rotate down in the center.

In general, the mode of rotation cannot be readily changed because, for reasons of servicing and maintenance, it is desirable to employ engines that rotate in the same direction.

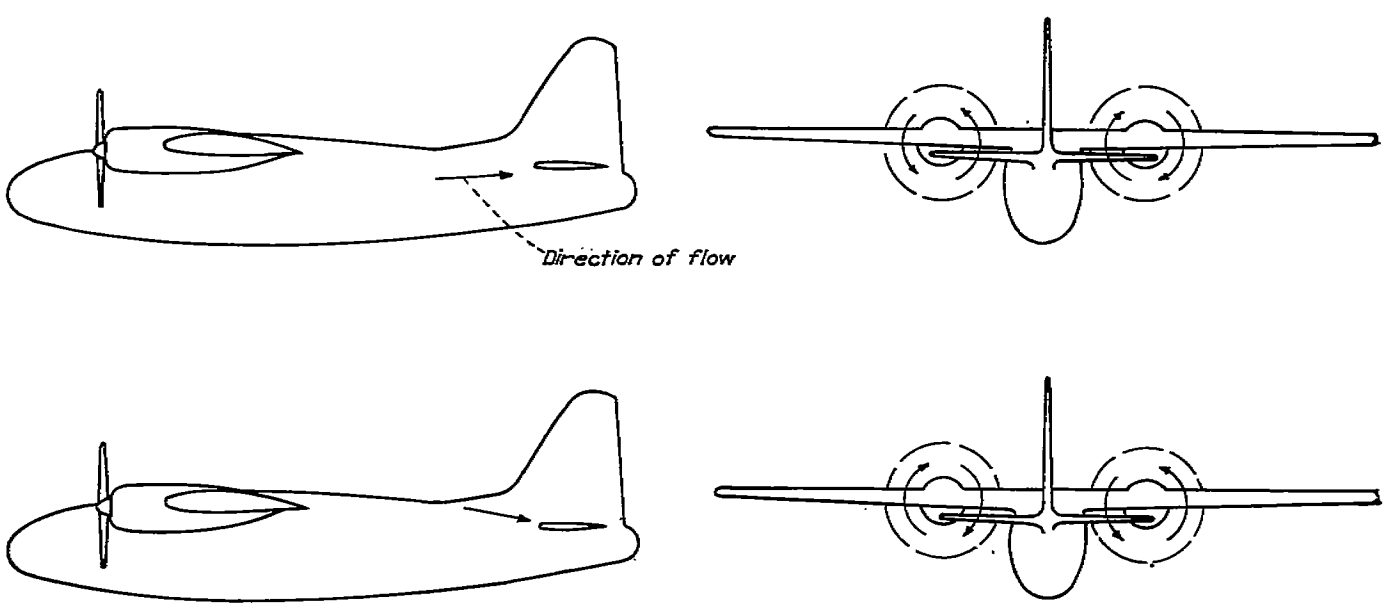

FIGURE 4.—Effect of mode of propeller rotation on downwash at tail on a twin-engine airplane.

JET-PROPELLED AIRPLANES

On a jet-propelled airplane in which the jet is expelled from the rear of the fuselage, the influence of the jet on the flow about the airplane will probably have a negligible effect on stability. Application of the jet power will, however, introduce the moment of the direct jet thrust about the center of gravity. The moment coefficient caused by this force varies with speed in a manner similar to that caused by the propeller axial force, and its effects on stability are the same. A more serious effect on stability may occur if the jet exit is unsymmetrical. In this case, the jet may adhere to one side of the nozzle in some flight conditions and not in others. As a result, the direction of the jet thrust may change in an unpredictable manner and cause large pitching-moment changes. For this reason, it is advisable to use a symmetrical nozzle which is not located directly alongside other parts of the airplane.

In order to avoid damage to the structure, the jet is always located in such a way that it does not impinge directly on some part of the airplane. Jets mounted on the wing, which pass below the tail, may, however, cause considerable change in the downwash at the tail, even though they do not blow directly on it, because of the inflow of air into the mixing zone behind the jet. The destabilizing effect of this downwash is similar to that of a propeller slipstream. The magnitude of this effect may be estimated from data given in reference 12.

The flow into the inlets of a turbojet engine also causes a destabilizing effect which may be estimated from the change in direction and the mass flow of the air entering the inlet.

CONTROL CHARACTERISTICS IN STEADY FLIGHT

In steady flight, the elevator must be used to offset any pitching moment caused by the stability of the airplane or, in other words, by the variation of pitching moment with angle of attack. If the airplane is stable ($dC_m/d\alpha$ negative), more up elevator (corresponding to a more rearward position of stick) must be applied to hold the airplane at a higher angle of attack. Because steady flight at a higher angle of attack corresponds to a lower flying speed, a stable airplane will require a rearward motion of the control stick to trim at a lower flight speed and vice versa. Such a condition leads to a logical type of control; that is, in order to reduce the speed, the pilot normally noses the airplane up by pulling back on the stick. This stick position may then be maintained to hold the airplane in trim at a lower flight speed. On the other hand, if the airplane is unstable, the pilot, in order to fly at a lower speed, must first pull the stick back to nose the airplane up and then move it forward ahead of its original position to hold the airplane in trim at the lower speed and prevent the speed from continuing to decrease.

The stability of the airplane with stick free is similarly related to the variation of control force with speed. If the airplane is stable with stick free, a pull force will be required to trim at a lower speed. Thus, for a stable airplane, if the speed were reduced and the stick then released, the stick would move forward and pitch the airplane down, and its speed would therefore increase to the original trim speed. A logical type of control results if the airplane has stick-free stability because in order to reduce the speed, for example, the pilot must first pull on the stick to pitch the airplane up. He may then maintain this control force to hold the airplane in trim at the lower speed.

The stick-fixed stability of an airplane is apparent to the pilot through its influence on the variation of elevator angle with speed or with angle of attack. In steady flight the elevator is used to make the pitching moment zero. The variation of elevator angle with speed may be derived by use of this fact. The following relations are obtained from figure 5. The pitching moment due to elevator angle is

$$M=-\delta_e\frac{\partial C_{L_T}}{\partial\delta_e}q_TS_Tl \tag{8}$$

This formula neglects the small pitching moment of the tail about its quarter-chord point. The pitching-moment coefficient is

$$C_m=-\delta_e\frac{\partial C_{L_T}}{\partial\delta_e}\frac{q_TS_Tl}{qSc} \tag{9}$$

In order to make $C_m=0$, the pitching-moment coefficient due to the elevator must be equal and opposite to the pitching-moment coefficient due to the angle of attack. From formula (7) this quantity is

$$\begin{aligned}C_m&=C_L\left(\frac{dC_m}{dC_L}\right)\\&=C_L\left(-\frac{x}{c}\right)\end{aligned} \tag{10}$$

Hence

$$C_L\frac{x}{c}+\frac{\delta_e\frac{\partial C_{L_T}}{\partial\delta_e}q_TS_Tl}{qSc}=0 \tag{11}$$

or

$$\delta_e=-\frac{C_L\frac{x}{c}qSc}{\frac{\partial C_{L_T}}{\partial\delta_e}q_TS_Tl} \tag{12}$$

or the elevator angle δ_e is directly proportional to the lift coefficient C_L and to the distance between the center of gravity and the neutral point. Because in steady flight

$$C_L=\frac{W}{\frac{\rho}{2}V^2S} \tag{13}$$

then

$$\begin{aligned}\delta_e&=-\frac{W\frac{x}{c}qSc}{\frac{\partial C_{L_T}}{\partial\delta_e}q_TS_Tl\frac{\rho}{2}V^2S}\\&=-\frac{\frac{W}{S}\frac{x}{c}}{\frac{\partial C_{L_T}}{\partial\delta_e}\frac{q_T}{q}\frac{S_T}{S}\frac{l}{c}\frac{\rho}{2}V^2}\end{aligned} \tag{14}$$

or the elevator angle varies inversely as the square of the speed.

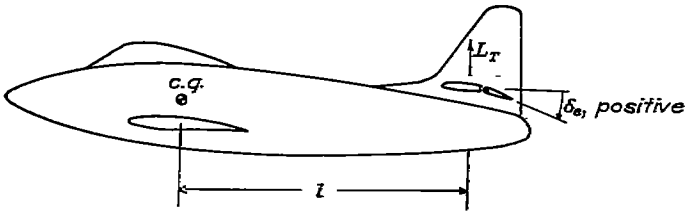

FIGURE 5.—Forces acting on airplane due to elevator deflection.

In the preceding formulas, it has been assumed that zero elevator deflection is required to trim when the lift coefficient is zero. In practice, some initial elevator deflection will be required to offset the pitching moments existing when $C_L=0$. The value of elevator deflection given in formulas (12) and (14) represents the change in deflection from this initial value.

Typical examples of the variation of elevator angle with speed for stable and unstable airplanes are shown in figure 6. In general, curves of the type predicted by formula (14) are measured in gliding flight, but considerable variations from this type of curve may be obtained in power-on flight because of the effects of power mentioned previously and also because of effects of sideslip that will be considered later.

The stick-free stability of an airplane in flight is apparent to the pilot through its influence on the variation of control force with speed. The control-force variation with speed depends not only on the elevator-angle variation with speed but also on the hinge-moment characteristics of the elevator. Some consideration of the hinge-moment characteristics of typical control surfaces will therefore be required in order to derive an expression for the stick-force variation with speed. A control surface that consists of a plain flap with no aerodynamic balance usually has hinge moments that vary linearly with angle of attack or with deflection at angles below the stall. In practice, some type of aerodynamic balance on the surfaces is usually employed. In some cases, the hinge-moment characteristics of an aerodynamically balanced surface are nonlinear. In order that the control characteristics of the airplane shall be normal, however, linear hinge-moment characteristics are very desirable and an effort is usually made to avoid nonlinear characteristics. For this reason, it will be assumed in the following discussion that the elevator hinge moment varies linearly with angle

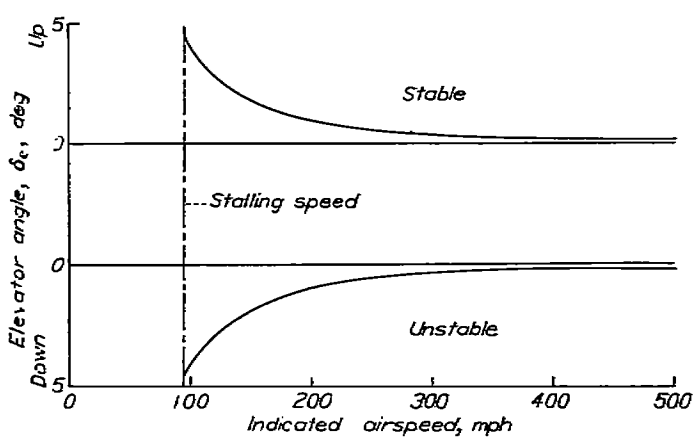

FIGURE 6.—Typical examples of the variation of elevator angle with speed for stable and unstable airplanes.

of attack of the tail and with elevator deflection. This statement may be expressed mathematically as follows:

$$H=\alpha_T\frac{\partial H}{\partial \alpha_T}+\delta_e\frac{\partial H}{\partial \delta_e} \tag{15}$$

Hinge moment may be expressed in terms of a dimensionless coefficient similar to lift and moment coefficients. The hinge-moment coefficient C_h is defined by the relation

$$C_h=\frac{H}{qb_ec_e^2} \tag{16}$$

Formula (15) may then be expressed as follows:

$$H=(\alpha_T C_{h_{\alpha_T}}+\delta_e C_{h_{\delta_e}}+C_{h_0})q_T b_e c_e^2 \tag{17}$$

The term C_{h_0} has been added to take care of any initial hinge-moment coefficient that may exist when α_T and δ_e are zero. The trim tab may be used to vary C_{h_0}.

The variation with speed of elevator hinge moment may be obtained by substituting in formula (17) the expressions for the values of α_T and δ_e already derived. The expression for δ_e (formula (14)) has been modified by adding δ_{e_0}, the initial elevator deflection when C_L is zero. This substitution gives

$$H=\left\{\left[\frac{C_L}{\frac{dC_L}{d\alpha}}\left(1-\frac{d\epsilon}{d\alpha}\right)+i_T\right]C_{h_{\alpha_T}}+\left(-\frac{C_L\frac{x}{c}qSc}{\frac{\partial C_{L_T}}{\partial \delta_e}q_TS_Tl}+\delta_{e_0}\right)C_{h_{\delta_e}}+C_{h_0}\right\}q_Tb_ec_e^2 \tag{18}$$

In steady flight $C_L=\frac{W}{qS}$. The stick force is directly proportional to the elevator hinge moment: $F=KH$. Making these substitutions and simplifying gives

$$F=K\left[\frac{\frac{W}{S}\frac{q_T}{q}\left(1-\frac{d\epsilon}{d\alpha}\right)b_ec_e^2}{\frac{dC_L}{d\alpha}}C_{h_{\alpha_T}}-\frac{\frac{W}{S}\frac{x}{c}b_ec_e^2}{\frac{l}{c}\frac{S_T}{S}\frac{\partial C_{L_T}}{\partial \delta_e}}C_{h_{\delta_e}}+C_{h_0}'q_Tb_ec_e^2\right] \tag{19}$$

where C_{h_0}' is the sum of the constant terms:

$$C_{h_0}'=i_TC_{h_{\alpha_T}}+\delta_{e_0}C_{h_{\delta_e}}+C_{h_0} \tag{20}$$

Formula (19) may be used to show the effect of various design features on the variation of stick force with speed. If the assumption is made that the ratio q_T/q does not vary appreciably with speed (a condition usually true in gliding flight), the first two terms of formula (19) are seen to be independent of speed. The third term, which depends on the trim-tab setting or stabilizer setting, adds to the constant force a force that varies as the square of the speed. These conditions are shown graphically in figure 7. The slope of the curve of stick force against speed for a given trim speed is seen to be stable when the sum of the first two terms gives a pull force. If $C_{h_{\delta_e}}$ is assumed to be negative, factors contributing to stability are, first, a center-of-gravity location ahead

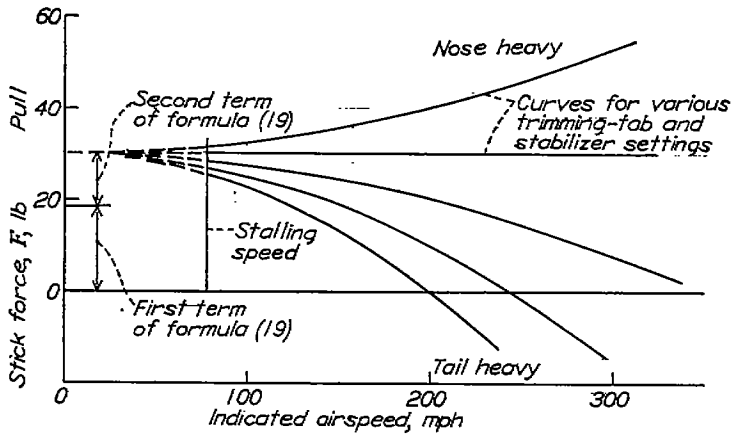

FIGURE 7.—Variation of stick force with speed in steady flight as calculated by formula (19). Values below the stalling speed have no physical significance.

of stick-fixed neutral point, and second, a positive value of $C_{h_{\alpha_T}}$. The case of a positive value of $C_{h_{\delta_e}}$ is of no practical interest because, as will be shown later, this condition results in unstable short-period oscillations of the airplane with stick free. If the airplane is stable with the stick fixed (x/c positive), increasing $C_{h_{\delta_e}}$ negatively will increase the slope of the curve of stick force against speed.

The relative importance of the terms $C_{h_{\delta_e}}$ and $C_{h_{\alpha_T}}$ may be shown by substituting the following typical values for the first two terms in formula (19):

$\frac{W}{S}=40$ pounds per square foot $\qquad K=1.25$

$\frac{dC_L}{d\alpha}=0.10$ per degree $\qquad \frac{q_T}{q}=1.0$

$1-\frac{d\epsilon}{d\alpha}=0.4$ $\qquad \frac{\partial C_{L_T}}{\partial \delta_e}=0.05$ per degree

$\frac{x}{c}=0.05$ $\qquad \frac{l}{c}=4$

$\frac{S_T}{S}=0.2$

The first two terms of formula (19) are $200C_{h_{\alpha_T}}b_ec_e^2$ and $62.5C_{h_{\delta_e}}b_ec_e^2$. For this particular value of static margin, therefore, a given change in $C_{h_{\alpha_T}}$ has about three times as much effect on the sum of these two terms, and hence on the stability characteristics, as a similar change in $C_{h_{\delta_e}}$.

One type of diagram that illustrates graphically the relative effects of $C_{h_{\alpha_T}}$ and $C_{h_{\delta_e}}$ on the static stability, and that is also useful in the design of an elevator, is shown in figure 8. This diagram is a plot of $C_{h_{\alpha_T}}$ against $C_{h_{\delta_e}}$. On this plot is a line representing combinations of $C_{h_{\alpha_T}}$ and $C_{h_{\delta_e}}$ which make the sum of the first two terms of equation (19), and hence the stick-free stability, equal to zero. This line is drawn for the case of a static margin of $0.05c$, just considered, and also for the case of the center of gravity at the stick-fixed neutral point (static margin equal to zero). When the static margin is equal to zero, variations of $C_{h_{\delta_e}}$ have no effect on the stick-force variation with speed. In this diagram, each combination of $C_{h_{\delta_e}}$ and $C_{h_{\alpha_T}}$ may represent the hinge-moment characteristics of an elevator with some type of aerodynamic balance. It is possible to pick combinations of $C_{h_{\delta_e}}$ and $C_{h_{\alpha_T}}$ that will give stability. A range of types of aerodynamic balance which will give stability may therefore be selected. Other lines, representing such quantities as various degrees of stick-force variation with speed or acceleration, trim changes due to flaps and power, and boundaries between stable and unstable short-period oscillations, may be drawn on a plot of this type. The hinge-moment parameters which give the most desirable characteristics for a given application may then be determined.

The relation between the control characteristics of the airplane and the locations of the stick-fixed and stick-free neutral points may be summarized on a diagram similar to that previously given for the stability characteristics. This chart is shown as figure 9.

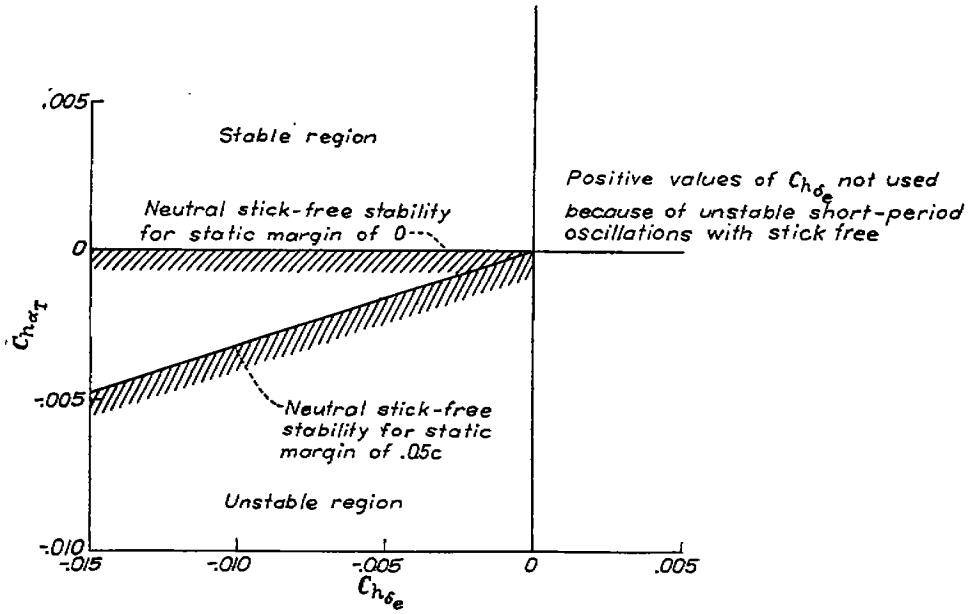

FIGURE 8.—Boundary between stable and unstable values of $C_{h_{\alpha_T}}$ and $C_{h_{\delta_e}}$ for the example given in the text. Unstable side of boundaries indicated by cross-hatching.

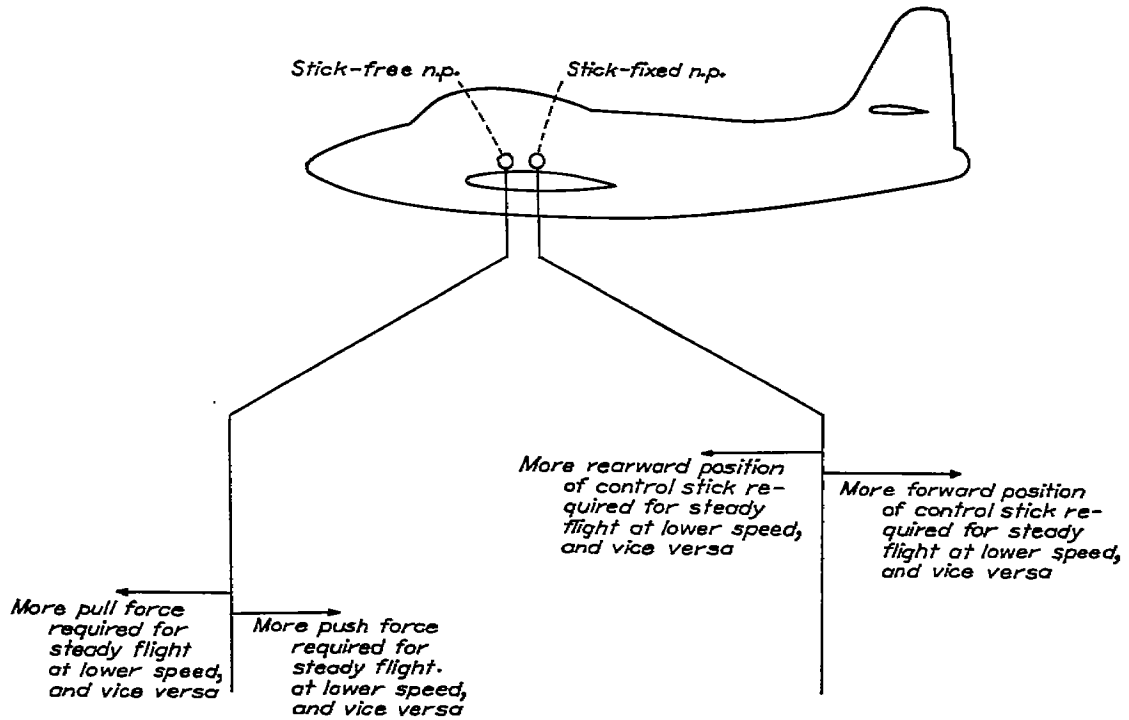

FIGURE 9.—Chart describing the control characteristics of an airplane as a function of center-of-gravity position. The arrows indicate location of center of gravity with respect to neutral point.

When a control surface is free to float it will assume a deflection such that the hinge moment is zero. If the surface is initially trimmed at zero deflection, the floating angle is related to the angle of attack by the formula

$$\frac{\delta}{\alpha}=-\frac{C_{h_\alpha}}{C_{h_\delta}} \tag{21}$$

It was previously mentioned that the stick-free stability would be increased if the elevator tended to float against the relative wind and that a positive value of $dC_h/d\alpha$ would contribute to the stick-free stability. Formula (21) indicates that a surface with a positive value of C_{h_α} will float against the relative wind. The two methods of considering the problem of stick-free stability are therefore in agreement.

DETERMINATION OF NEUTRAL POINTS FROM FLIGHT TESTS

Data for the determination of neutral points from flight tests are obtained by measuring the elevator angle and stick force required to trim the airplane at various speeds. The tests are made at two or more center-of-gravity positions.

STICK-FIXED NEUTRAL POINT

The stick-fixed neutral point is determined from the variation of the elevator angle with speed. Typical flight data showing elevator angle plotted against speed for various center-of-gravity positions are shown in figure 10(a). The stick-fixed neutral point at any given speed may be determined by finding the center-of-gravity position at which the elevator angle for trim remains constant as the speed is changed slightly. Because of the difficulty of reading the slopes of the curves plotted in figure 10(a) with equal accuracy at all speeds, it is desirable to plot first the elevator angles against lift coefficient as shown in figure 10(b). Inasmuch as in this case these curves are not straight lines, the slopes of these curves are determined at the lift coefficient at which it is desired to find the neutral point. These slopes are then plotted against the center-of-gravity position as shown in figure 10(c). The stick-fixed neutral point is the point at which slope $\frac{d\delta_e}{dC_L}$ equals zero: in this case, 36.5 percent mean aerodynamic chord (M.A.C.).

STICK-FREE NEUTRAL POINT

The stick-free neutral point is determined from the variation of stick force with speed. Typical flight data showing stick force plotted against speed for various center-of-gravity positions are shown in figure 11(a). From these curves, a plot of F/q against lift coefficient is made as shown in figure 11(b). The slopes of these curves are determined at the lift coefficient at which it is desired to find the neutral point. These slopes are then plotted against the center-of-gravity position, as shown in figure 11(c). The stick-free neutral point is found as the center-of-gravity position for which the slope $\frac{d\frac{F}{q}}{dC_L}$ equals zero: in this case, at 28.0 percent mean aerodynamic chord.

This method is strictly correct only at the lift coefficient at which the airplane is trimmed, but the error involved at other lift coefficients is generally within the accuracy of the flight data.

Another method to determine the stick-free neutral point in flight is to trim the airplane, stick free, at various speeds and record the trim-tab angle as a function of speed. The test is repeated at various center-of-gravity positions and the stick-free neutral point is determined as the center-of-gravity position where the variation of trim-tab angle with lift coefficient is zero. The procedure used is similar to that described for finding the stick-fixed neutral point from the measured variation of elevator angle with speed.

EFFECTS OF COMPRESSIBILITY ON TRIM AND STABILITY

EFFECTS OF COMPRESSIBILITY ON VARIOUS AIRPLANE COMPONENTS

Large changes in the aerodynamic forces and moments exerted on a wing do not occur until the wing critical Mach number is exceeded. At the critical Mach number, a shock wave is formed. In order to define the critical Mach number, a locus of points on the body where the velocity of flow is a maximum must be determined. When the component of velocity normal to this locus reaches the local speed of sound, the critical Mach number is reached. For two-dimensional and axially symmetrical flow, or other flows in which the locus of points where the velocity is a maximum is perpendicular to the free-stream flow, the critical Mach number is the speed at which the local velocity equals the local speed of sound. At a Mach number approximately 1/10 greater than the critical Mach number, separation of flow occurs behind the shock wave, and the lift and the moment acting on the wing are greatly changed. Generally the lift at a given angle of attack is reduced and the pitching moment acting on the wing becomes more positive. The critical Mach number of a wing depends principally on its thickness and somewhat on its airfoil section. The critical Mach numbers of various airfoil sections are given in reference 13.

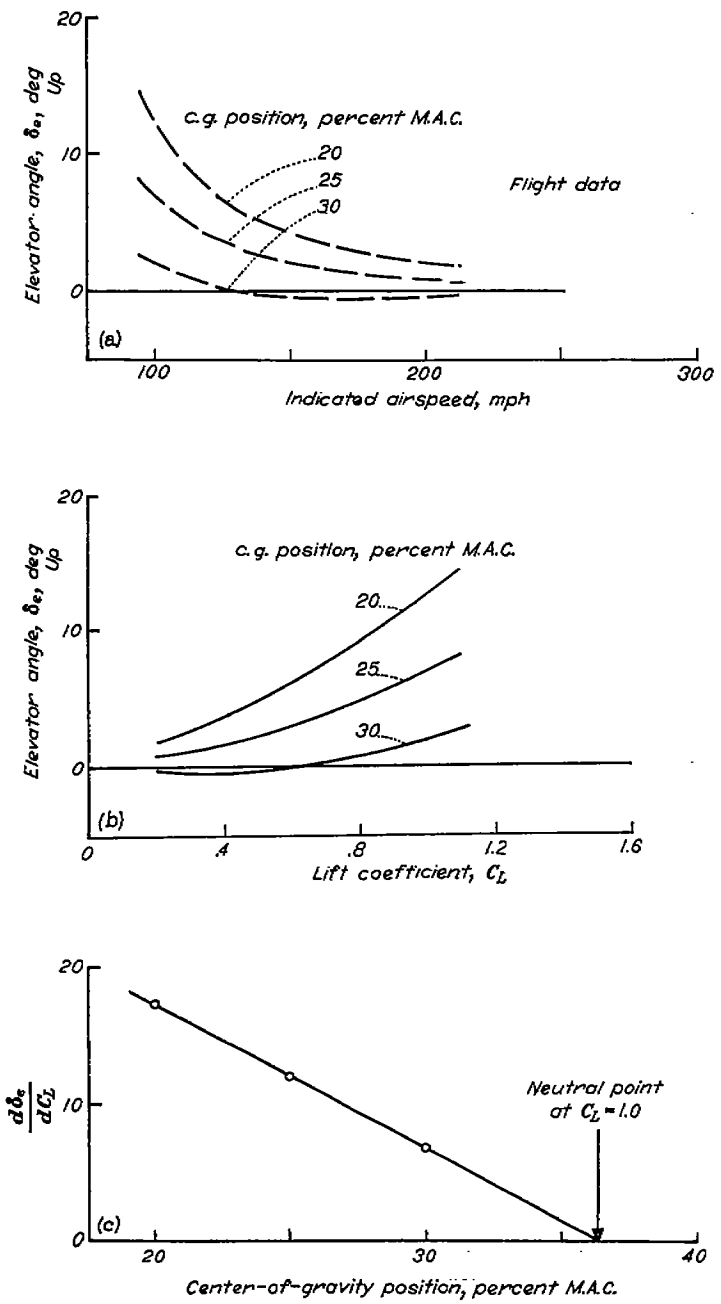

(a) Variation of elevator angle with indicated airspeed.
(b) Variation of elevator angle with lift coefficient.
(c) Variation of the quantity $\frac{d\delta_e}{dC_L}$ with center-of-gravity position.

FIGURE 10.—Method for determining stick-fixed neutral point from flight data.

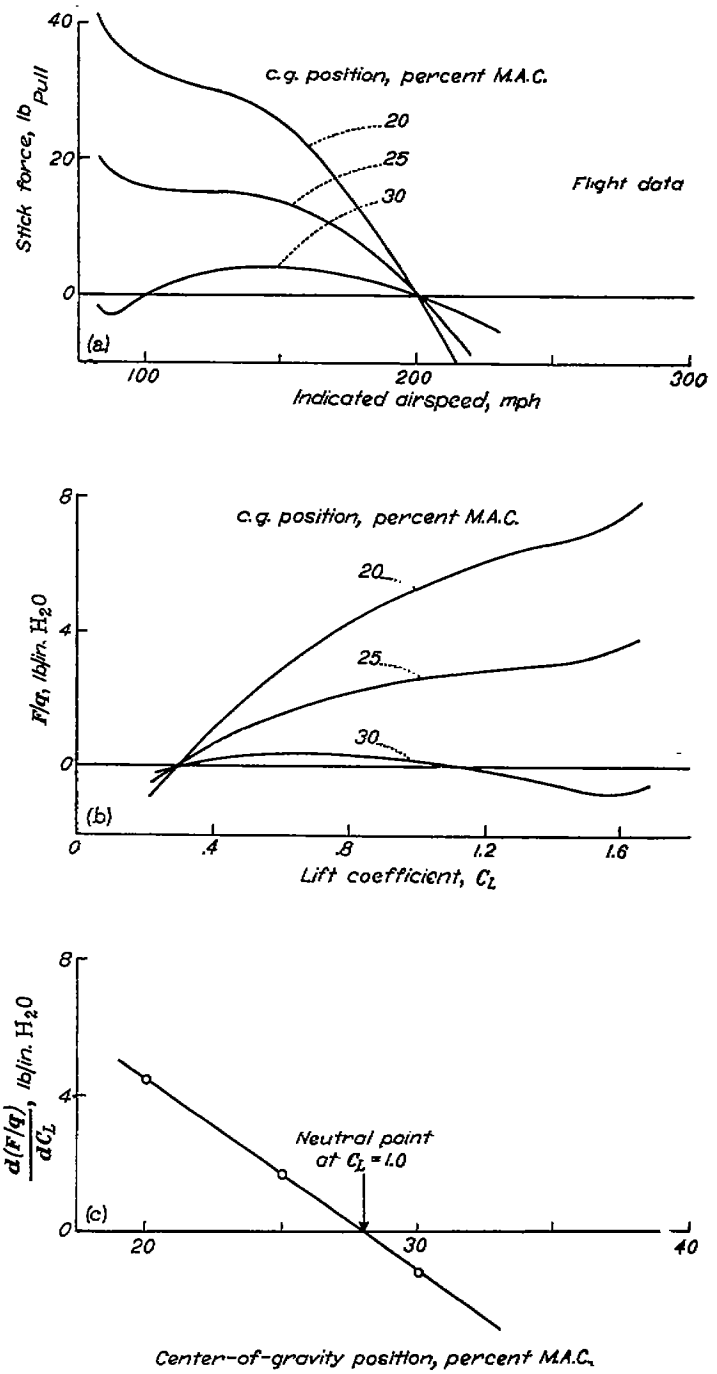

(a) Variation of stick force with indicated airspeed.
(b) Variation of the quantity F/q with lift coefficient.
(c) Variation of the quantity $\frac{d(F/q)}{dC_L}$ with center-of-gravity position.

FIGURE 11.—Method for determining stick-free neutral point from flight data.

The forces acting on the tail are influenced by compressibility effects in the same way as the forces on the wing. At Mach numbers 1/10 or more above the critical Mach number of the tail section, the effectiveness of a control surface such as the elevator may be expected to be greatly reduced.

Compressibility effects on the fuselage may cause considerable drag increases but they usually do not seriously affect the stability.

EXAMPLES OF EFFECTS OF COMPRESSIBILITY

Typical effects of compressibility on the trim and stability characteristics of a straight-wing airplane designed primarily for flight at subcritical speeds, as typified by fighter airplanes of World War II, are as follows:

(1) Large nosing-down tendency at high speed that may require pull force on the stick exceeding the strength of the pilot

(2) Large increase in stability which requires unduly large elevator movement and forces to produce a given change in lift coefficient or acceleration

An example of the variation with speed of the stick force required for steady flight in a fighter airplane of this type is shown in figure 12. The stick forces required to pull out of the dive with various accelerations are also shown. Although most airplanes experience a diving tendency due to compressibility effects, some airplanes have shown a nosing-up tendency.

REASONS FOR COMPRESSIBILITY EFFECTS

In most cases the diving tendency experienced at high Mach numbers may be accounted for by a reduction in downwash at the tail resulting from separation of flow at the wing root and also from the need to pitch the airplane to a higher angle of attack in order to maintain the same lift on the wing as the Mach number increases. The increased stability of the airplane at high Mach numbers results from the same cause: that is, the airplane must be pitched to a higher angle of attack than normal to obtain a given lift increment and when this lift is obtained it is not accompanied by downwash at the tail because of separation of the flow from the inboard portions of the wing. When these compressibility effects are experienced in flight, they are generally accompanied by severe buffeting and shaking of the airplane caused by the action of the wing wake on the tail surfaces.

Compressibility effects may be postponed to higher Mach numbers by providing thinner wings and otherwise providing for a cleaner design. The terminal Mach numbers of future airplanes may, however, frequently exceed the Mach numbers at which compressibility effects occur, in spite of any refinements in design. With thinner sections, however, the adverse effects of compressibility on stability and control are likely to be much less severe.

Another method for reducing the adverse effects of compressibility is the use of sweepback. On a sweptback wing of high aspect ratio, the critical Mach number of sections not too close to the root or tip is postponed until the component of velocity normal to the leading edge exceeds the critical Mach number of the airfoil in two-dimensional flow. (See reference 14.) On a finite-span swept wing, however, this amount of gain is not obtained because the root section tends to behave more like an unswept wing. Thus, the use of sweepback cannot be expected to eliminate stability difficulties similar to those encountered with straight-wing designs. The use of a large amount of sweepback also introduces many low-speed stability and control problems. (See reference 15.)

DIVE-RECOVERY FLAPS

One device which has proved successful in providing recovery from dives at high Mach numbers on straight-wing airplane configurations designed primarily for flight at subcritical speeds is known as the dive-recovery flap which consists of a pair of small movable flaps on the lower surface of the wing, generally located at about 30 percent of the chord. Such flaps should be located in front of the horizontal tail because their main effect is to change the span load distribution of the wing so as to provide an increased downwash at the tail. For a fighter airplane such flaps would have about 2-foot span and 6-inch chord. When deflected in the dive these flaps will cause the airplane to pull out with an acceleration of about 5*g*. The acceleration obtained may be adjusted by varying the flap deflection. A typical dive-recovery-flap installation is illustrated in figure 13.

EFFECTS OF STRUCTURAL AND CONTROL-SURFACE DISTORTION ON LONGITUDINAL STABILITY

Other causes of difficulty with longitudinal stability and control characteristics that appear in flight at high speeds are distortion of the covering on the control surface, twisting of the stabilizer, or bending of the fuselage. The most serious effect generally results from deflection of the covering of the control surface. Such effects generally arise from two

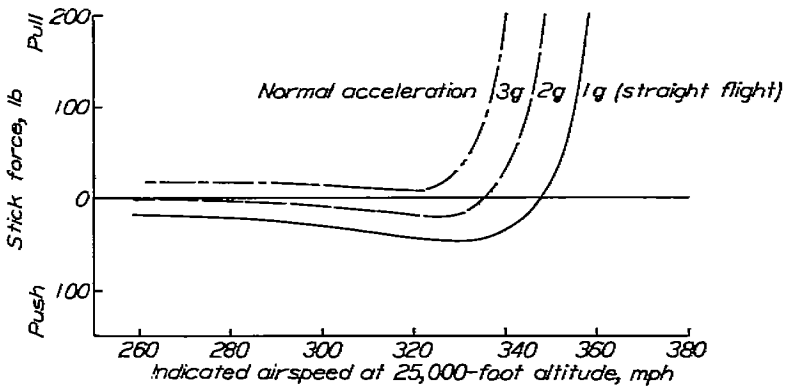

FIGURE 12.—Typical example of effects of compressibility on the variation of stick force with speed in steady flight and in flight with constant values of normal acceleration.

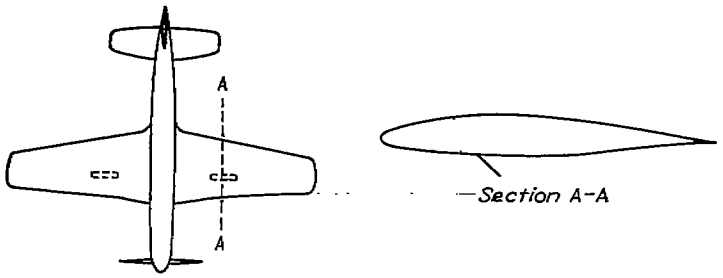

FIGURE 13.—Typical dive-recovery-flap installation.

causes. These are first, a bulging or sucking in of the covering due to positive or negative internal pressure, and second, a change in the mean camber line of the control surface due to external aerodynamic loads.

The effect of positive internal pressure may bulge the surface so that its trailing-edge angle is greatly increased. This change in contour may result in the surface becoming overbalanced and will cause violent short-period oscillations to occur. On the other hand if the covering is sucked in by negative internal pressure, the effective trailing-edge angle may be reduced so that values of C_{h_α} become more negative. This change in hinge-moment characteristics may result in a loss of stick-free stability which may cause unstable control-force variations with acceleration in dive pull-outs.

Bowing of the mean camber line of the control surface which increases progressively with speed may occur if the fixed surface ahead of it is set at the wrong angle. For example, if the stabilizer incidence is too great, up elevator will have to be carried in flight at high speed. The down load on the elevator will cause a progressive increase in curvature of the surface which gives an effect similar to deflecting a trim tab on the surface farther up as the speed increases. As a result, rapidly increasing pull force will be required to maintain trim. The opposite effect will occur if the stabilizer is set at a negative angle, requiring down elevator for trim. The effects are illustrated in figure 14.

In order to determine whether unusual control characteristics in high-speed flight are caused by compressibility or by distortion, tests should be made at low and high altitudes. In this way different Mach numbers may be attained at the same dynamic pressure. Compressibility effects will always set in at a given Mach number, whereas distortion effects will set in at a given dynamic pressure.

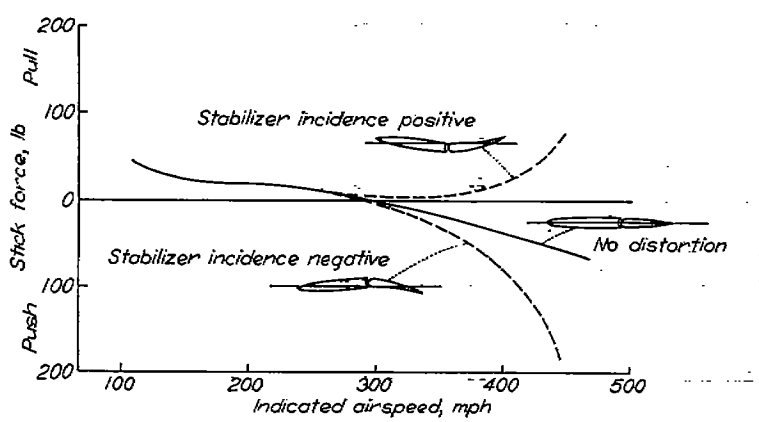

FIGURE 14.—Effect of stabilizer incidence on the variation of stick force with speed in straight flight. The variations in stick-force characteristics result from distortion of the elevator covering and from stabilizer twist. (Angles and distortions greatly exaggerated on sketches.)

These stability characteristics cannot be predicted from wind-tunnel tests of a rigid model; however, tests of a rigid model should give characteristics of the basic airplane configuration when it is free from distortion effects. The distortion effects may be minimized by correctly setting the stabilizer and by properly venting the elevator to avoid large internal pressures. In some cases the distortion effects may be employed to advantage to provide increased stability if the rigid airplane is deficient in stability. A more complete analysis of these distortion effects is given in reference 16.

LONGITUDINAL TRIM CHANGES DUE TO POWER AND FLAPS

REQUIREMENT

The specifications of various agencies for satisfactory flying qualities differ somewhat in the limits specified for allowable trim changes. In general, the requirement is that the change in stick force due to changing the configuration of the airplane by changing the flap position or power condition should be less than 35 pounds at any speed within the structural limits of the design.

REASONS FOR TRIM CHANGE WITH FLAP AND POWER CONDITION

In general, changing the flap or power condition will cause a change in angle of flow and in dynamic pressure at the tail. These effects combined with the change in wing pitching-moment characteristics will require a change in elevator angle to maintain trim. The changes in the angle of attack and elevator angle influence the elevator hinge-moment coefficient in accordance with the values of C_{h_α} and C_{h_δ}. A change in dynamic pressure causes a change in elevator hinge moment even if the hinge-moment coefficient remains constant. Trim change may possibly be minimized by using values of C_{h_α} and C_{h_δ} such that the effects of angle of attack and elevator deflection tend to cancel one another.

The maximum trim change frequently occurs when full power is applied after the airplane has been trimmed for a landing approach with flaps down and power off. This condition usually requires full nose-up trim-tab deflection. With application of power the velocity of flow over the trim tab generally increases more than the average change over the tail and large push forces may be required to prevent the airplane from nosing up.

On large airplanes, the value of C_{h_δ} must be made small to obtain light forces in maneuvers over a reasonably large center-of-gravity range. Since large changes in angle of attack of the tail usually occur when the flaps are deflected, the value of C_{h_α} must also be small to avoid large trim changes. In general, a large positive value of C_{h_α} (obtained with a horn-balanced elevator or a beveled-trailing-edge elevator) has been found to lead to excessive trim changes.

LANDING AND TAKE-OFF CHARACTERISTICS

REQUIREMENT FOR LANDING CHARACTERISTICS

The flying-qualities requirements state that the elevator control should be sufficiently powerful to hold the airplane off the ground until three-point contact is made for a conventional landing gear and, for a tricycle landing gear, should be sufficiently powerful to hold the airplane from

actual contact with the ground until the minimum speed required of the airplane is attained. The stick force required for this maneuver should be less than 50 pounds pull.

REQUIREMENTS FOR TAKE-OFF CHARACTERISTICS

During the take-off run it should be possible to maintain the attitude of the airplane by means of the elevator at any value between the level attitude and that corresponding to maximum lift under the following conditions:

(1) For a tricycle landing gear, after 0.8 take-off speed has been reached

(2) For a conventional landing gear, after 0.5 take-off speed has been reached

DISCUSSION OF GROUND EFFECT

The foregoing requirements were established because the landing condition is often the most critical with regard to elevator control. This condition results from the fact that the ground reduces the downwash angles near the tail and makes the airplane more stable. The size of the elevator is usually determined by the control requirements near the ground. A simplified explanation of the effect follows.

The airplane wing may be replaced by a vortex whose strength is proportional to the lift, as shown in figure 15(a). The vortex produces a vertical velocity w in the region of the tail and the downwash angle

$$\epsilon=\frac{w}{V}$$

The effect of the ground can be simulated by a mirror image of the airplane and its vortex system, since such an image will satisfy the condition that there can be no vertical velocity through the ground. This vortex system is shown in figure 15(b). The effect of the image vortex is to produce an upward velocity w_g in the region of the tail. The downwash angle when the airplane is near the ground is then

$$\epsilon=\frac{w-w_g}{V}$$

The downwash is therefore reduced by the presence of the ground and more up-elevator angle is required to trim the airplane.

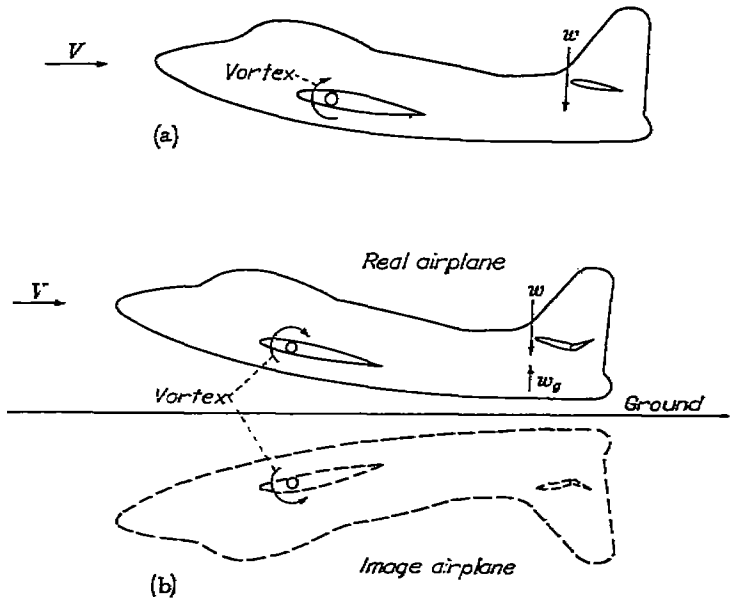

(a) Airplane away from ground.
(b) Airplane near ground.

FIGURE 15.—Effect of image vortex system on downwash at tail as airplane approaches the ground.

LONGITUDINAL STABILITY AND CONTROL CHARACTERISTICS IN ACCELERATED FLIGHT

RELATIONS BETWEEN LONGITUDINAL STABILITY IN STRAIGHT AND IN ACCELERATED FLIGHT

In the preceding sections the static stability of an airplane in straight flight has been discussed. The stability was related to the variation of pitching moment with angle of attack. Changes in angle of attack were brought about by changing the speed while keeping the airplane in straight flight at 1 g normal acceleration. This condition applies in ordinary climbing, cruising, or gliding flight. In maneuvers, however, it is more common for the pilot to make sudden or rapid changes in angle of attack which occur before the speed can change appreciably. The result of such changes in angle of attack is to cause an accelerated maneuver. In this case, the normal acceleration is more than 1 g and may approach the structural limit of the airplane, which for fighter airplanes corresponds to about $9g$ and for transport or bomber types, to about $3g$. During an accelerated maneuver of this kind, the elevator is used to supply a pitching moment which balances the pitching moment caused by the variation of angle of attack. In this respect longitudinal stability in maneuvers is similar to that in straight flight. An additional pitching moment is introduced, however, because of the curvature of the flight path in an accelerated maneuver. In order to calculate the elevator movement and control forces required in accelerated maneuvers, the effects of both sources of pitching moment must be considered.

The effects of curvature of the flight path are discussed first. Consider the airplane performing a pull-up from straight flight while traveling at constant speed as illustrated in figure 16. The change in angle of attack of the tail caused by the curvature of the flight path is given by the expression

$$\frac{l}{R}=\Delta\alpha_T \tag{22}$$

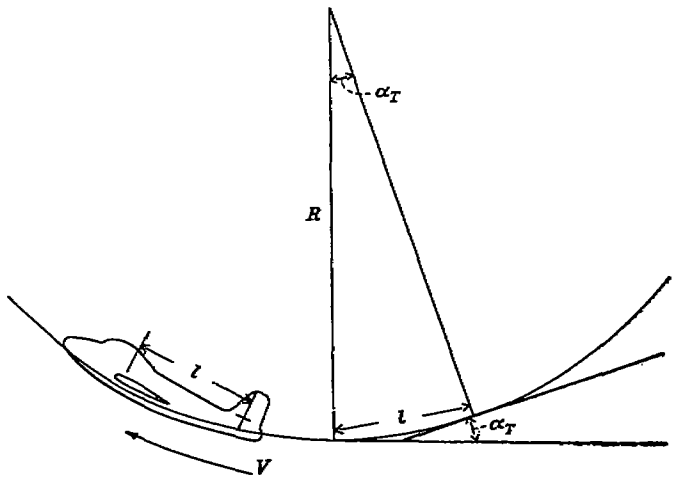

FIGURE 16.—Effect of curvature of flight path on the angle of attack at the tail during a pull-up.

The radius of curvature may be expressed in terms of the normal acceleration and the speed, by means of the formula

$$n-1=\frac{a_r}{g}=\frac{V^2}{Rg} \tag{23}$$

The change in angle of attack of the tail caused by curvature is therefore given by the expression

$$\Delta\alpha_T=\frac{l(n-1)g}{V^2} \tag{24}$$

For some calculations this formula is more conveniently expressed in terms of lift coefficient instead of normal acceleration. From the definition of lift coefficient

$$C_L=\frac{L}{\frac{\rho}{2}V^2S}$$

$$=\frac{Wn}{\frac{\rho}{2}V^2S} \tag{25}$$

This formula may be solved for V^2 to give

$$V^2=\frac{Wn}{C_LS\frac{\rho}{2}} \tag{26}$$

Substituting this value in formula (24) gives the following expression:

$$\Delta\alpha_T=\frac{l(n-1)C_LS\frac{\rho}{2}}{Wn}$$

$$=\frac{C_L}{2\mu}\frac{n-1}{n} \tag{27}$$

where

$$\mu=\frac{m}{\rho Sl} \tag{28}$$

The quantity μ is called the airplane relative-density coefficient. This factor frequently occurs in dynamic-stability calculations.

The change in elevator angle required in accelerated flight, like the change in angle of attack of the tail, comes from two sources. The first part, designated $\Delta\delta_{e_1}$, is that required to pitch the whole airplane to a higher angle of attack, and the second part, designated $\Delta\delta_{e_2}$, is that required to offset the additional lift on the tail that results from the curvature of the flight path. The quantity $\Delta\delta_{e_1}$ is derived by equating the pitching moment due to the change in elevator angle to the pitching moment due to change in angle of attack. The expression for the elevator angle was derived previously and is given in formula (12). The change in elevator angle is

$$\Delta\delta_{e_1}=-\frac{\Delta C_L qSx}{\frac{\partial C_{L_T}}{\partial\delta_e}q_TS_Tl} \tag{29}$$

An additional change in elevator angle is required to offset the effect of curvature of the flight path. This change in elevator angle is given by the expression

$$\Delta\delta_{e_2}=-\frac{\Delta\alpha_T}{\tau}$$

$$=-\frac{C_L}{2\mu\tau}\frac{n-1}{n} \tag{30}$$

where

$$\tau=\frac{\partial C_{L_T}/\partial\delta_e}{\partial C_{L_T}/\partial\alpha_T} \tag{31}$$

The sum of these two increments of elevator angle gives the total change in elevator angle required in accelerated flight.

CALCULATION OF STICK FORCES IN ACCELERATED FLIGHT

The change in elevator hinge moment may be calculated from the general formula

$$\Delta H=\left(\Delta\delta_eC_{h_{\delta_e}}+\Delta\alpha_TC_{h_{\alpha_T}}\right)q_Tb_ec_e^2 \tag{32}$$

It is convenient to consider separately the changes in hinge moment caused by pitching the whole airplane to a higher angle of attack and the changes in hinge moment caused by the effects of curvature of the flight path.

Effects of pitching the whole airplane to a higher angle of attack.—The change in elevator angle necessary to substitute in formula (32) was given in formula (29). The change in angle of attack at the tail is derived as follows:

$$\Delta\alpha_{T_1}=\Delta\alpha_w\left(1-\frac{d\epsilon}{d\alpha}\right)$$

$$=\frac{\Delta C_L}{\left(\frac{dC_L}{d\alpha}\right)_w}\left(1-\frac{d\epsilon}{d\alpha}\right) \tag{33}$$

Substituting the preceding values for $\Delta\delta_{e_1}$ and $\Delta\alpha_{T_1}$ in equation (32) and simplifying gives the following expression for the change in elevator hinge moment:

$$\Delta H_1=\left[-\frac{Sx}{\frac{\partial C_{L_T}}{\partial\delta_e}S_Tl}C_{h_{\delta_e}}+\frac{\left(1-\frac{d\epsilon}{d\alpha}\right)\frac{q_T}{q}}{\left(\frac{dC_L}{d\alpha}\right)_w}C_{h_{\alpha_T}}\right]\frac{W}{S}(n-1)b_ec_e^2 \tag{34}$$

where ΔH_1 is the change in elevator hinge moment neglecting the effects due to curvature of the flight path.

Effects of curvature of the flight path.—The change in elevator angle necessary to substitute in formula (32) was given previously (formula (30)) and the change in angle of attack at the tail due to the curvature of the flight path was also presented (formula (27)). The elevator angle used is that required to offset the additional lift on the tail caused by the curvature of the flight path. When these quantities are substituted in formula (32) and the result simplified, the following expression is obtained for the change in elevator hinge moment caused by curvature of the flight path:

$$\Delta H_2=\left[-\frac{1}{\tau}C_{h_{\delta_e}}+C_{h_{\alpha_T}}\right]g\frac{\rho}{2}\frac{q_T}{q}lb_ec_e^2(n-1) \tag{35}$$

DISCUSSION OF FACTORS INFLUENCING STICK FORCES IN ACCELERATED FLIGHT

Formulas (34) and (35) show that the hinge moment and hence the stick force in a pull-up varies directly with the normal acceleration and that the force per g normal acceleration is approximately independent of speed. The part of the stick force per g caused by pitching the airplane to a higher angle of attack is proportional to the wing loading and to the span times chord squared of the elevator. The contribution of $C_{h_{\delta_e}}$ to this part of the force per g is proportional to x, the distance between the center of gravity and the stick-fixed neutral point in straight flight. The part of the stick force per g caused by curvature of the flight path is proportional to the air density, the tail length, and the span times chord squared of the elevator. This part of the force per g, therefore, varies with altitude and approaches zero at high altitude where the density becomes small. This part of the force per g is independent of the center-of-gravity position.

DISTINCTION BETWEEN TURNS AND PULL-UPS

In a steady turn the angle of bank rapidly approaches 90° as the acceleration increases. For example, in a $2g$-turn the angle of bank is 60°, and in a $4g$-turn the angle of bank is 76°. When the airplane is banked, the acceleration of gravity which caused a reading of 1 g on the accelerometer in level flight is no longer applied to the instrument. A turn and a pull-up made at the same value of acceleration as determined by an accelerometer will, therefore, differ because 1 g which was supplied by gravity in the pull-up must be supplied by a shorter radius of curvature in the turn. The change in the angle of attack at the tail caused by curvature of the flight path will, therefore, be greater in a steady turn than in a gradual pull-up at the same acceleration. The expression for change in angle of attack at the tail caused by curvature of the flight path in a turn is as follows:

$$\Delta\alpha_T=\frac{C_L}{2\mu}\left(\frac{n^2-1}{n^2}\right) \tag{36}$$

When this expression is used to calculate the force per g, it is found that the force per g in a turn does not vary linearly with the acceleration. The departure from linearity causes a slight difference between the values of force per g measured in turns and pull-ups. This difference, however, is generally within the experimental accuracy of flight tests. Many other factors may cause a nonlinear variation of stick force with acceleration on an actual airplane. For example, nonlinear stick-force variation may be introduced by nonlinear hinge-moment characteristics of the elevator or by gyroscopic moments from the propeller.

REQUIREMENTS FOR ELEVATOR CONTROL IN ACCELERATED FLIGHT

The elevator effectiveness is specified by the requirement that either the allowable load factor or the maximum lift coefficient can be developed at every speed. Ordinarily this requirement is less critical than the requirement for making a three-point landing. Possible exceptions to this statement are as follows: light airplanes for which the effects of curvature of the flight path are large, and flight at high Mach numbers where, because of large increases in stability caused by compressibility effects, excessive elevator deflection may be required for maneuvering.

The variation of normal acceleration with elevator angle and with control force should be approximately linear. The theory developed previously indicates that this condition will be satisfied if the elevator hinge moment and effectiveness characteristics vary linearly with deflection.

The variation of the elevator control force with normal acceleration should be in the following range:

(1) For transports, heavy bombers, and so forth, less than 50 pounds per g

(2) For dive bombers, torpedo planes, and so forth, less than 15 pounds per g

(3) For pursuit types, sport planes, and other highly maneuverable airplanes, less than 8 pounds per g

(4) For any airplane it should require a pull force of not less than 30 pounds to obtain the allowable load factor

These requirements vary somewhat in the specifications of various agencies, but the force limits are in the same range. Another requirement sometimes made is that the airplane should not, under any condition, be flown with the center of gravity far enough back to reduce the force gradient to zero pounds per g. An additional requirement that the force in rapid maneuvers should be sufficiently heavy compared with the force in steady turns has been shown to be necessary by recent research.

EXAMPLES OF STICK FORCE IN ACCELERATED FLIGHT ON DIFFERENT TYPES OF AIRPLANES

The stick force per g of an airplane at any center-of-gravity position may be conveniently shown on a plot of the type shown in figure 17(a). The effects of changes in some of the parameters that influence the force per g are illustrated in figure 17(b). In order to illustrate the effect of airplane size on the stick-force characteristics, the force per g that would be obtained at various center-of-gravity positions on three airplanes of different types has been calculated. The calculations were based on the assumption of an unbalanced elevator with hinge-moment parameters $C_{h_\alpha}=-0.003$ per degree and $C_{h_\delta}=-0.007$ per degree. The results of the calculations are shown in figure 18. The desired range of stick force is also shown in this figure. The airplane characteristics that were assumed in calculating these results are given in table I.

From these examples, the use of a plain unbalanced elevator on the fighter or bomber airplane types is seen to give stick forces that do not satisfy the requirements over a sufficiently large center-of-gravity range.

MEANS OF OBTAINING SATISFACTORY ELEVATOR CONTROL FORCES IN STEADY MANEUVERS

As illustrated in figure 17(b), the variation of stick force per g with center-of-gravity position may be decreased by reducing the value of C_{h_δ} and the value of the stick force

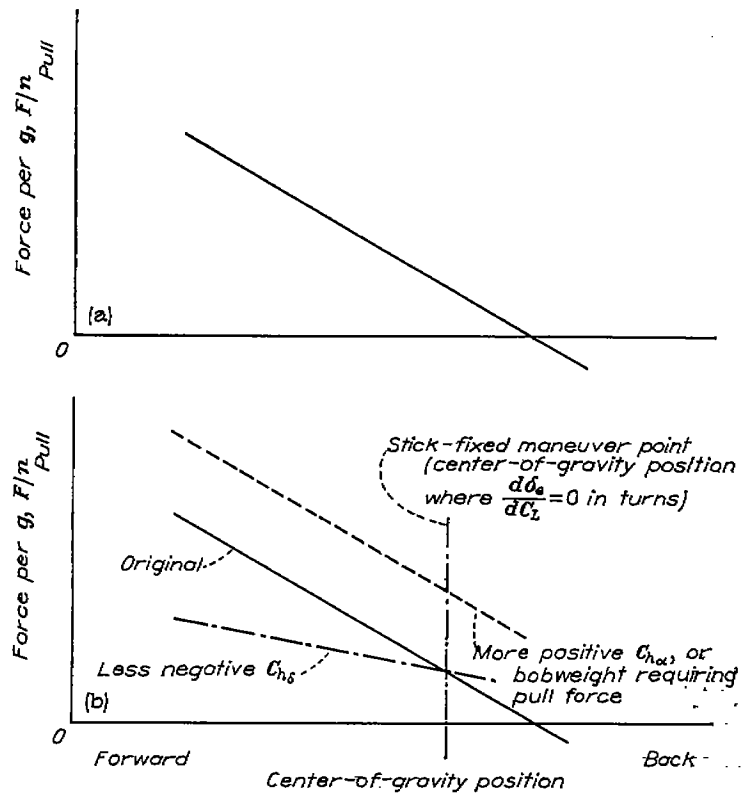

(a) Illustrative variation of force per g with center-of-gravity position.
(b) Effect of various design variables on the variation of force per g with center-of-gravity position.
FIGURE 17.—Graphs showing stick forces required in maneuvers.

per g may be changed by a constant amount at any center-of-gravity position by changing the value of C_{h_α}. A constant increment of stick force per g may also be added by use of a bobweight. A bobweight, therefore, has an effect on the stick-force characteristics similar to that of a more positive value of C_{h_α}. Means for independently varying the values of C_{h_α} and C_{h_δ} were discussed in connection with the balancing of control surfaces. Figure 18 shows that an unbalanced elevator will provide satisfactory stick forces on a light airplane, but that a large amount of aerodynamic balance will be required on larger airplanes. The required reduction in C_{h_δ} as a function of airplane weight is shown roughly in figure 19. Since small variations in C_{h_δ} will occur because of differences in contours of the elevators within production tolerances, the stick-force characteristics of very large airplanes may be difficult to predict and may vary widely between different airplanes of the same type if a conventional elevator is used. These difficulties may be avoided by the use of a servotab or by some type of booster mechanism which multiplies the pilot's effort by a large factor.

STICK FORCES IN RAPID PULL-UPS

When an airplane is equipped with an elevator that does not have a large amount of aerodynamic balance, the stick force required to produce a given acceleration in a rapid pull-up will be much larger than the stick force required to produce the same acceleration in a steady turn, because the elevator deflection required in a rapid pull-up is much larger. On the other hand, if the elevator is very closely balanced so that C_{h_δ} is zero and all the force in a maneuver results from the use of a bobweight or a positive value of C_{h_α} the stick force in a rapid maneuver will be no greater than that in a

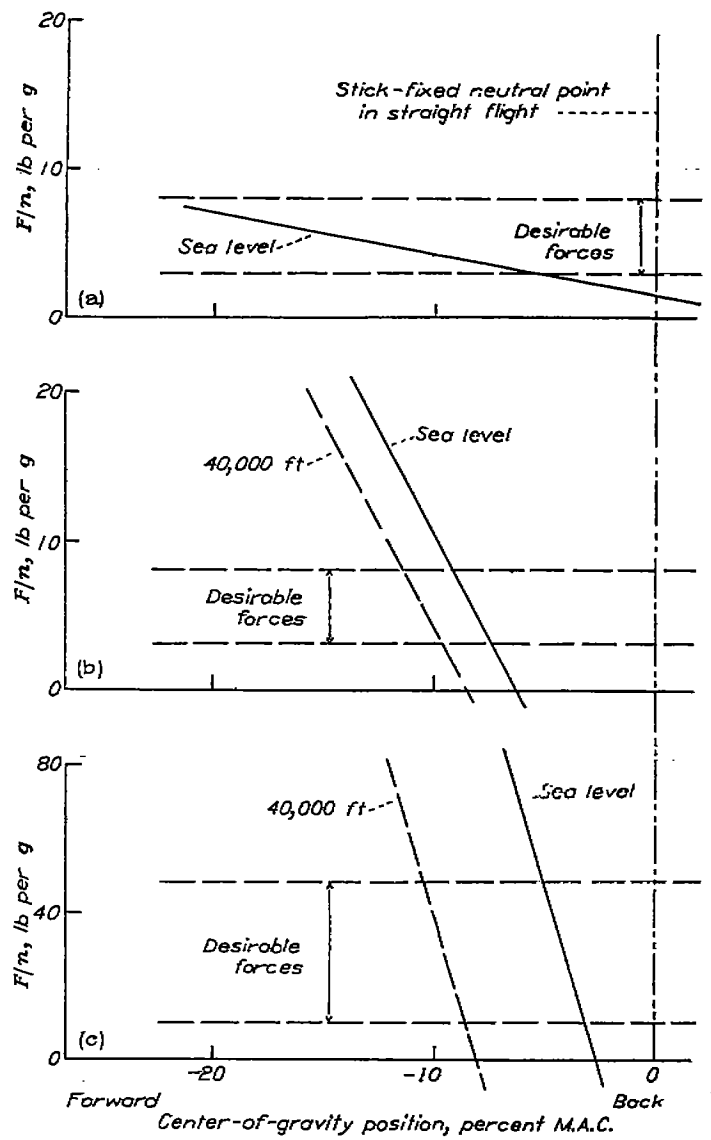

(a) Light airplane.
(b) Fighter airplane.
(c) Bomber.
FIGURE 18.—Stick-force characteristics in maneuvers for three types of airplanes with unbalanced elevators; airplane characteristics given in table I. $C_{h_\alpha}=-0.003$ per degree; $C_{h_\delta}=-0.007$ per degree.

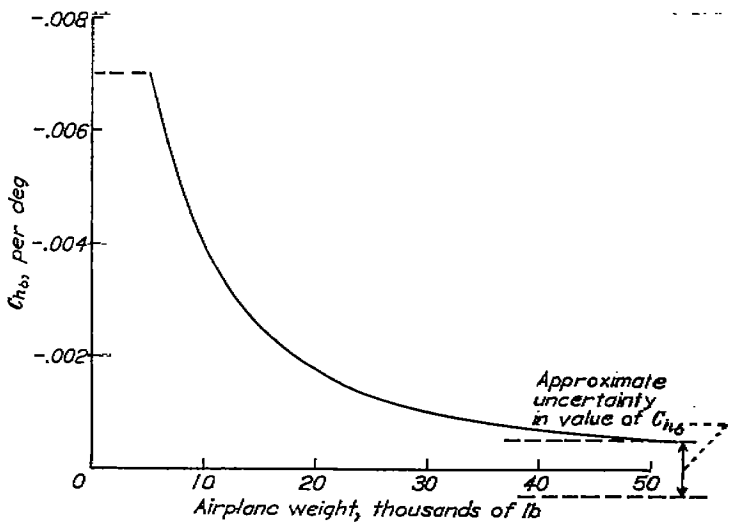

FIGURE 19.—Approximate reduction in C_{h_δ} required to meet elevator-control-force requirements as a function of airplane weight.

steady turn. Such arrangements have been tried in order to provide desirable stick forces in steady turns over a large range of center-of-gravity position. Flight tests of such an arrangement have shown it to be undesirable, however, because the pilots object to the light stick forces in rapid maneuvers. With such a system the pilot may be able to deflect the elevator quickly a large amount with practically no stick force and then the stick force caused by the action of the bobweight will build up as the acceleration increases. In order to avoid this undesirable control feel, the use of very closely balanced elevators should perhaps be avoided. This restriction will necessarily limit the center-of-gravity range over which desirable stick forces can be obtained unless some additional mechanism is employed which increases the stick forces for rapid deflections without affecting the forces under steady conditions.

DISCUSSION OF TYPES OF CONTROL-SURFACE BALANCE

IMPORTANCE OF CONTROL-SURFACE BALANCE

The discussion of stick-force characteristics in steady flight and in maneuvers indicated the close relation between the stick-free longitudinal stability characteristics of an airplane and the hinge-moment parameters of the elevator. The same type of relation is shown to exist in the case of the aileron and rudder controls. Not only the stability itself but also the magnitude of the control forces in various maneuvers is directly dependent on the control-surface hinge-moment parameters. As larger and faster airplanes are made, an increased degree of balance (corresponding to values of C_{h_α} and C_{h_δ} closer to zero) must be employed on all control surfaces in order to prevent control forces in steady flight and in maneuvers from becoming excessive. Several common types of aerodynamic balance for control surfaces will be considered. First, the characteristics of a plain control surface, which consists of a hinged flap with no aerodynamic balance, are discussed.

PLAIN CONTROL SURFACE

The values of C_{h_α} and C_{h_δ} as a function of flap chord for plain (unbalanced) sealed flaps on an NACA 0009 airfoil of infinite aspect ratio are shown in figure 20. These data are taken from reference 17. The effect of finite aspect ratio usually is to reduce somewhat the negative values of both C_{h_α} and C_{h_δ}. Reliable values of these hinge-moment parameters for a finite aspect ratio can be calculated from the two-dimensional parameters only when methods based on lifting-surface theory are used. Lifting-line-theory methods, such as are generally used in prediction of lift-curve slope, have been proved inadequate. Lifting-surface-theory equations, applicable to full-span control surfaces on wings of finite aspect ratio, are given in reference 18.

BALANCE CHARACTERISTICS

Overhanging or inset-hinge balance.—The overhanging balance or inset-hinge balance has been the type most commonly used in the past on actual airplanes. The hinge-moment parameters for control surfaces having such balances are affected by the overhang length and by the balance nose shape in the manner illustrated in figure 21. These data are taken from reference 19, which also contains a large amount of information on the various types of aerodynamic balance. Increasing the bluntness of the balance nose reduces the hinge moments for small deflections, but it also tends to make the flow separate from the balance nose at smaller deflections than those at which separation occurs on an elliptical- or sharp-nose section. A control surface with a very blunt-nose balance therefore usually must be restricted to a smaller deflection range than a control surface with a more rounded nose shape.

Unshielded horn balance.—The effects of varying the size of an unshielded horn balance are shown for a typical case in figure 22. These data are taken from reference 20. The amount of balance is expressed in terms of the area moment of the horn about the hinge line.

Balancing tab.—The effect of a balancing tab is to reduce the negative value of C_{h_δ} without appreciably changing the value of C_{h_α}. The value of C_{h_α} is not changed because the configuration of the airfoil is not affected by the tab except when the control-surface deflection is varied. The tab affects the value of C_{h_δ} by changing the pressure distribution in the vicinity of the trailing edge of the control surface when the surface is deflected. This change for a balancing tab results in a small loss in control-surface effectiveness as well as a reduction in the value of C_{h_δ}. A tab with a ratio of tab chord to flap chord of about 0.2 gives the least

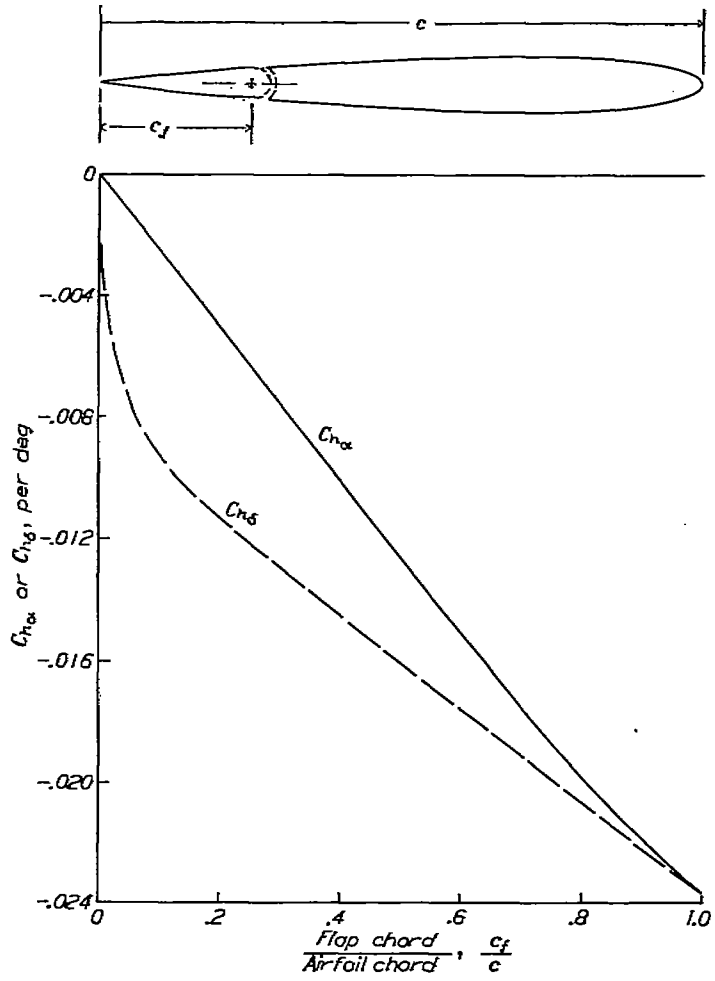

FIGURE 20.—Variation of flap section hinge-moment parameters with ratio of flap chord to airfoil chord. Plain flaps with sealed gaps on NACA 0009 airfoil of infinite aspect ratio. Data from reference 17.

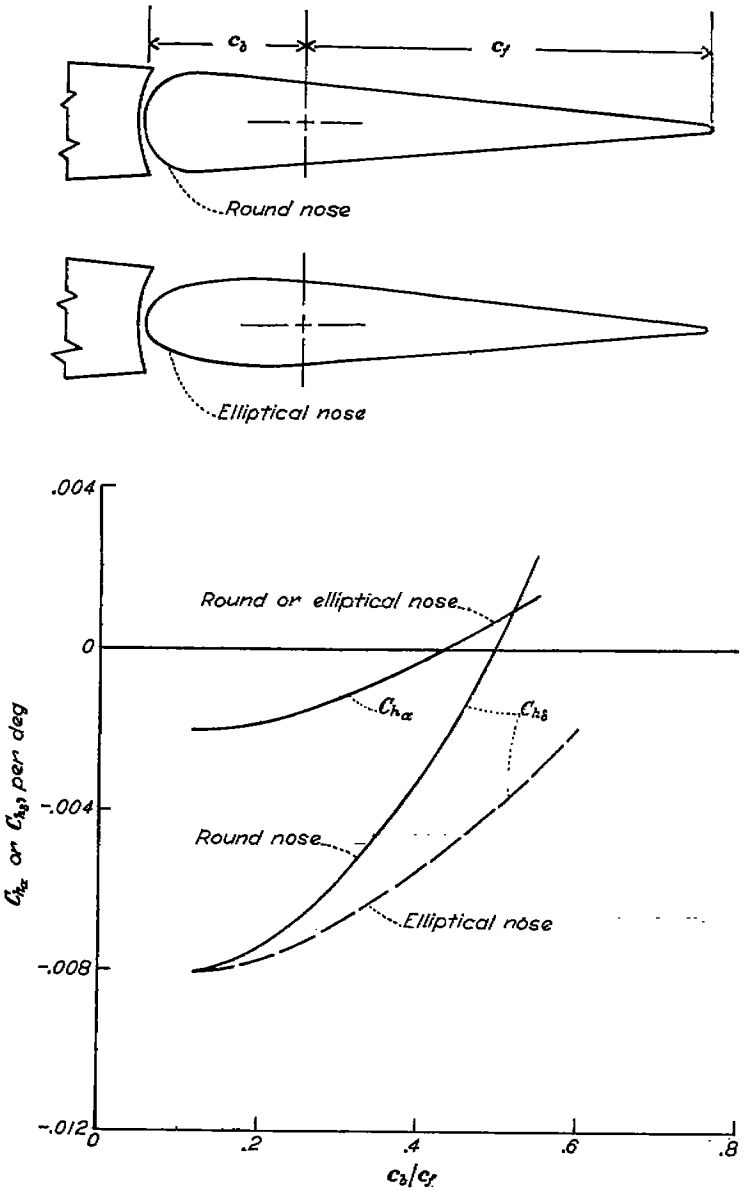

FIGURE 21.—Typical effects of overhang balances on control-surface hinge-moment parameters. Derived from data of reference 19.

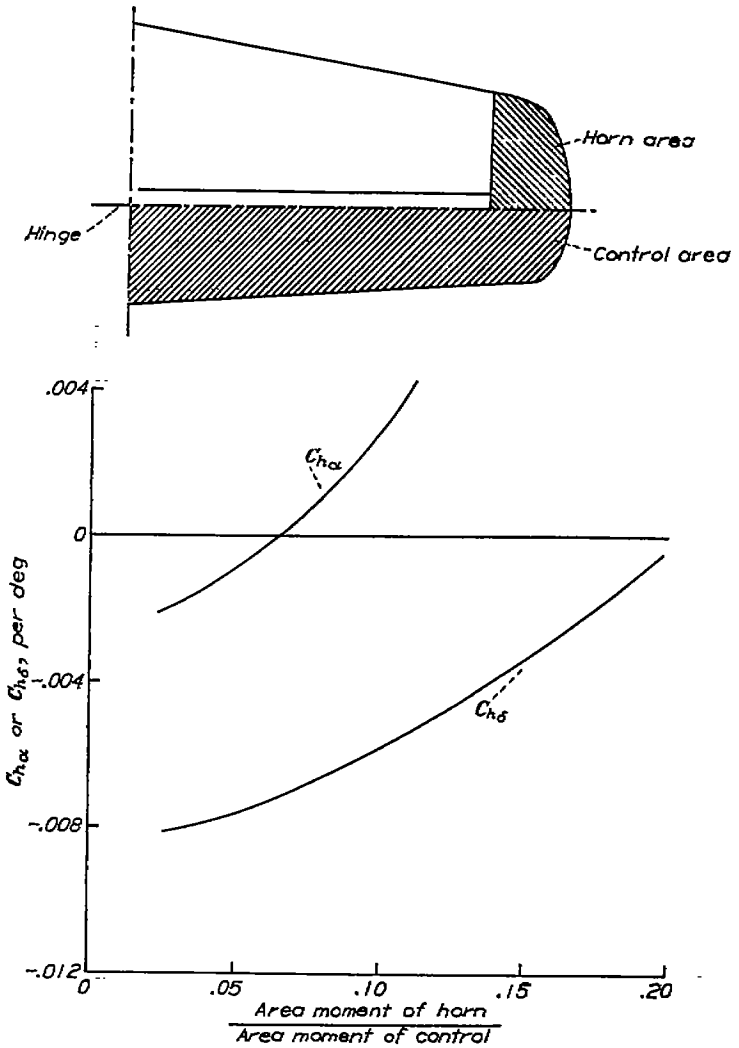

FIGURE 22.—Typical effects of unshielded horn balances on control-surface hinge-moment parameters. Derived from data of reference 20.

reduction in control effectiveness for a given change in C_{h_δ}. Typical effects of a balancing tab on the hinge-moment characteristics are illustrated in figure 23. The data shown in this figure are derived from reference 19.

Beveled-trailing-edge balance.—The flow in the vicinity of the trailing edge of an airfoil equipped with a beveled-trailing-edge control surface, when the control surface is deflected, is like that caused by a deflected tab. For this reason, the value of C_{h_δ} is reduced by the beveled trailing edge. The beveled trailing edge also reduces the negative value (or increases the positive value) of C_{h_α}. A beveled trailing edge on an unsealed control surface may give exaggerated effects at small deflections and angles of attack, which result in overbalance of the surface for a small deflection range. For this reason, control surfaces equipped with a beveled trailing edge should be sealed. The effects of trailing-edge angle on hinge-moment characteristics are shown in figure 24. The data shown in this figure are derived from reference 19.

Sealed internal balance.—The characteristics of a sealed internal balance are somewhat similar to those of an overhanging balance. The ratio of the area of any leaks in the seal to the area of the vents at the hinge line must be small if the balance is to be effective. In practice, some type of rubberized cloth seal is most satisfactory. The effects of a sealed internal balance on the hinge-moment characteristics are shown in figure 25.

Other types of control-surface balance.—Other types of control-surface balance that are sometimes used are as follows: shielded horn balance (paddle balance), Frise balance, piston balance, and various types of double-hinge control surfaces, such as those described in references 21 and 22. Other devices that may be used to reduce control forces include spoilers (reference 19), all-movable control surfaces (reference 23), servotabs, and spring tabs (reference 24).

COMPARISON OF VARIOUS BALANCING DEVICES

The preceding discussion of the various balancing devices has shown that some balances affect C_{h_α} more than C_{h_δ}, whereas other balances have a predominant effect on C_{h_δ}. In order to obtain desired control-force and stability characteristics, it is convenient to be able to vary C_{h_α} and C_{h_δ} independently through the appropriate choice of balance or of combinations of balances.

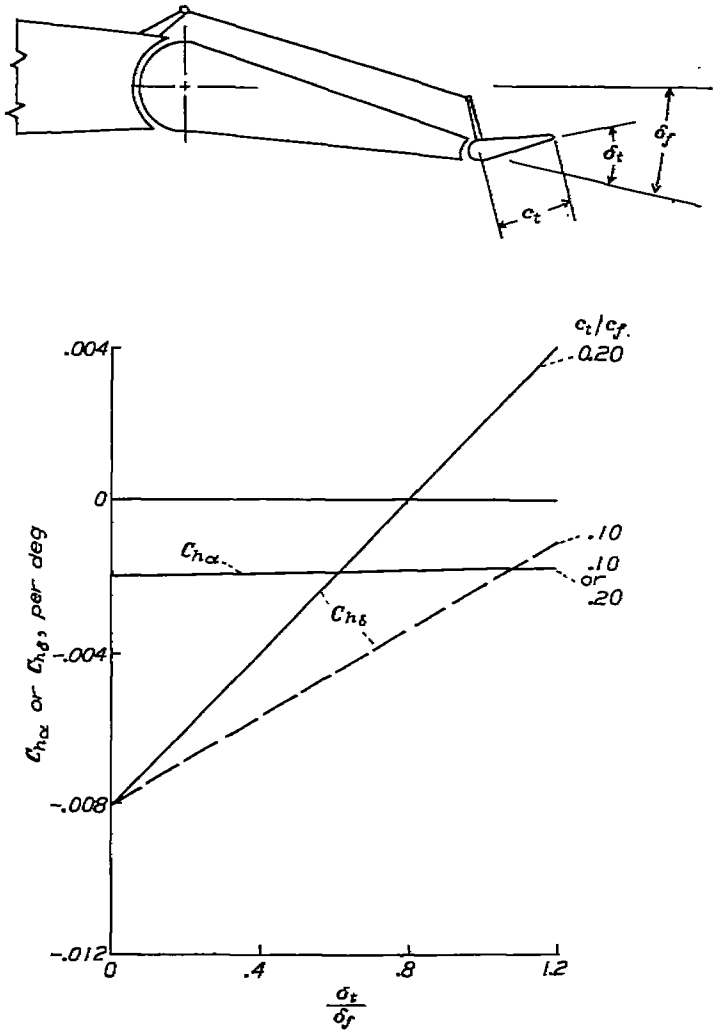

FIGURE 23.—Typical effects of full-span balancing tabs on control-surface hinge-moment parameters. Derived from data of reference 19.

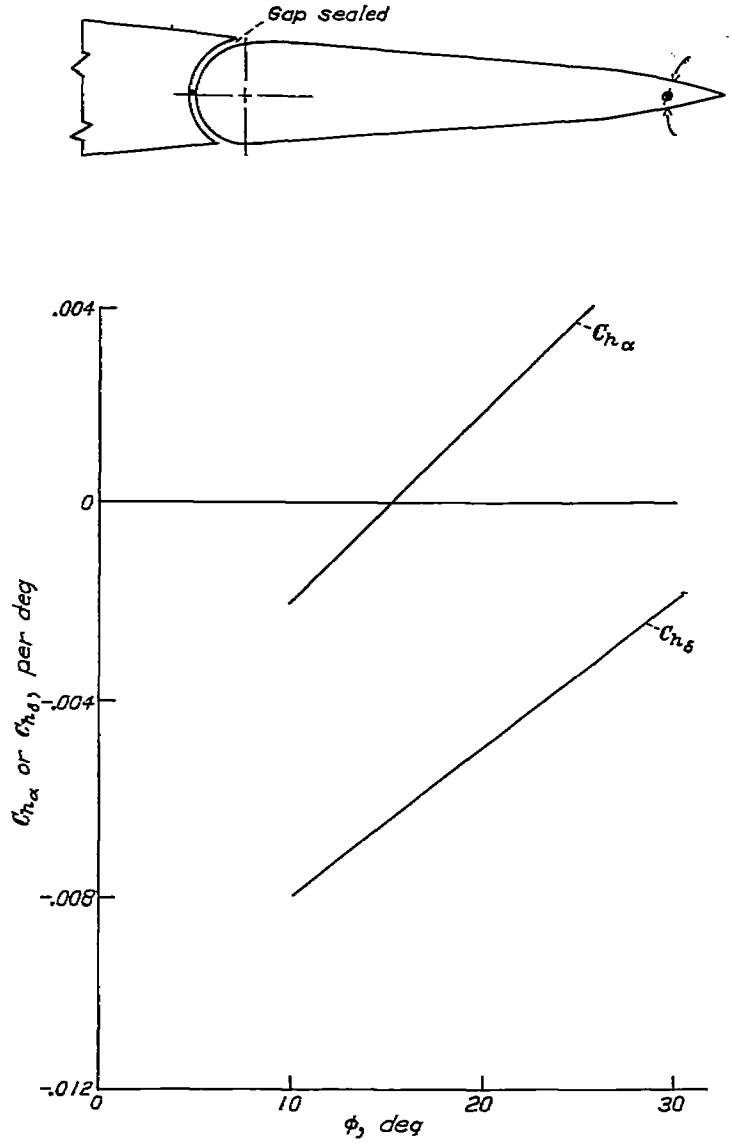

FIGURE 24.—Typical effects of beveled-trailing-edge balances on control-surface hinge-moment parameters. Derived from data of reference 19.

A comparison of the relative effects of the various balances on the hinge-moment parameters is given in figure 26 where values of C_{h_α} are plotted against values of C_{h_δ}. A point indicated by a circle on figure 26 represents the values of the hinge-moment parameters of a typical plain control surface. The various lines radiating from that point indicate the manner in which the hinge-moment parameters are changed by the addition of various kinds of balances. The distance along any of the lines from the point for the plain control surface to a point for a balanced control surface depends on the amount of balance used. Through the appropriate choice of aerodynamic balance a large number of combinations of C_{h_α} and C_{h_δ} can be obtained. A considerably greater number of combinations of these parameters can be obtained by combining two or more types of balance as, for example, a small amount of bevel with any of the overhang balances or with a balancing tab. The value of C_{h_α} may be made to increase positively while the value of C_{h_δ} increases negatively by combining an unbalancing tab with an unshielded horn balance or with a beveled-trailing-edge balance. A plot of C_{h_α} against C_{h_δ} such as figure 26 showing the balance characteristics may be used in conjunction with a similar plot such as figure 8 showing the required hinge-moment characteristics. By comparison of the two sets of curves, a balance which will provide the desired stick forces may be selected.

Any of the types of balance discussed in this section may be used to reduce the value of C_{h_δ} to zero if used in sufficient amount. The choice of the type of balance to use in a practical installation depends largely on the effect of the balance on characteristics other than the hinge moments at small deflections. The advantages and disadvantages of various types of balance are briefly discussed in table II.

DIRECTIONAL STABILITY AND CONTROL CHARACTERISTICS

DIRECTIONAL TRIM CHARACTERISTICS

REQUIREMENTS

For all types of airplanes, the rudder should be sufficiently powerful to provide equilibrium of yawing moments in flight with the wings level at any speed and in any flight condition. When the airplane is trimmed at maximum level-flight speed, the rudder force required at any speed from the stall to the maximum driving speed should be as

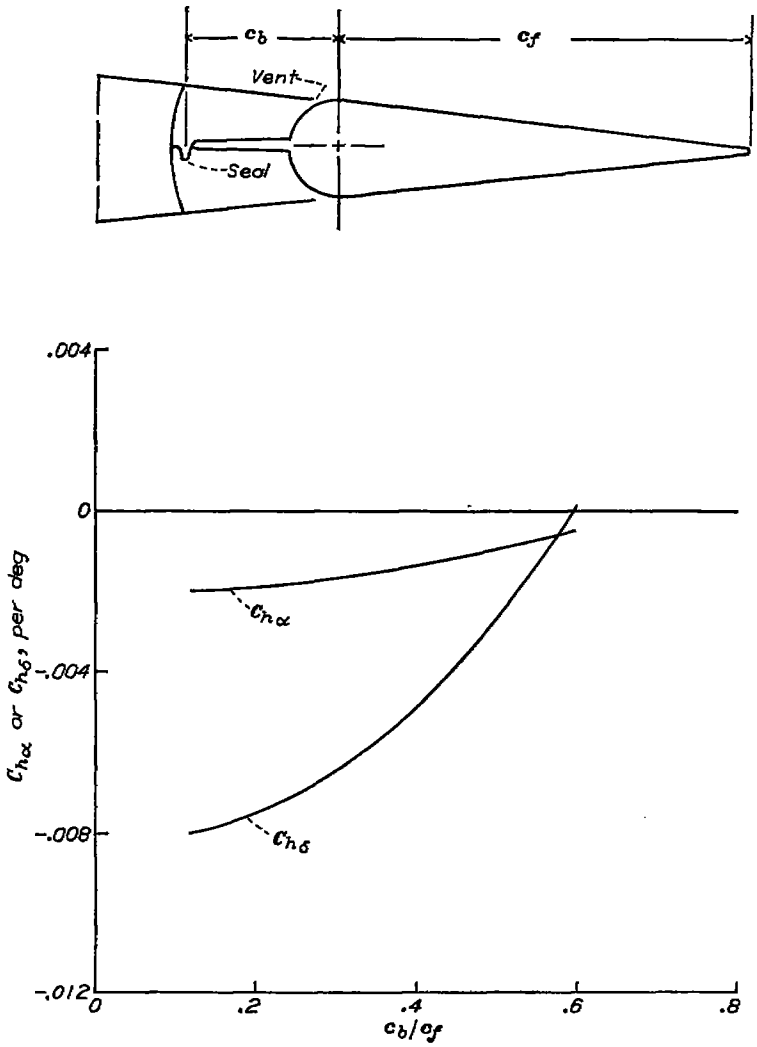

FIGURE 25.—Typical effects of sealed internal balances on control-surface hinge-moment parameters.

small as possible and should not exceed 180 pounds. In addition, the rudder control should be sufficiently powerful to maintain directional control during take-off and landing. For multiengine airplanes, the rudder control should be sufficiently powerful to provide equilibrium of yawing moments at all speeds above 110 percent of the stalling speed with any one engine inoperative (propeller at low pitch) and the other engines developing full rated power.

DIRECTIONAL TRIM CHARACTERISTICS FOR SINGLE-ENGINE AIRPLANES

Typical variations of rudder angle, rudder force, and sideslip with speed in straight flight with the wings laterally level are shown for a single-engine airplane in figure 27. The reasons for the rudder deflection and sideslip required at low speed with power on are illustrated in figure 28. At high angles of attack the propeller produces a yawing moment and the propeller-fuselage combination produces a side force. For the normal direction of propeller rotation (clockwise when viewed from the rear) the yawing moment and side force are to the left. Right rudder deflection is required to offset propeller yawing moment and also to offset the aileron yawing moment when the ailerons are deflected to balance the propeller torque. The vertical tail, therefore, develops an additional side force to the left. In order to offset the left side force on the fuselage and tail, the airplane must sideslip to the left because with the wings level no side-force component due to gravity exists. Because of the airplane's directional stability, additional rudder deflection to the right is required to provide directional trim when the airplane sideslips to the left. Right rudder deflection is also required to offset the effects of slipstream rotation. The provision of directional trim at low speed with flaps down and rated power generally is a critical condition for the rudder power. It is desirable to have sufficient rudder deflection beyond that required for trim to offset the yawing moments due to aileron deflection and rolling velocity in a roll.

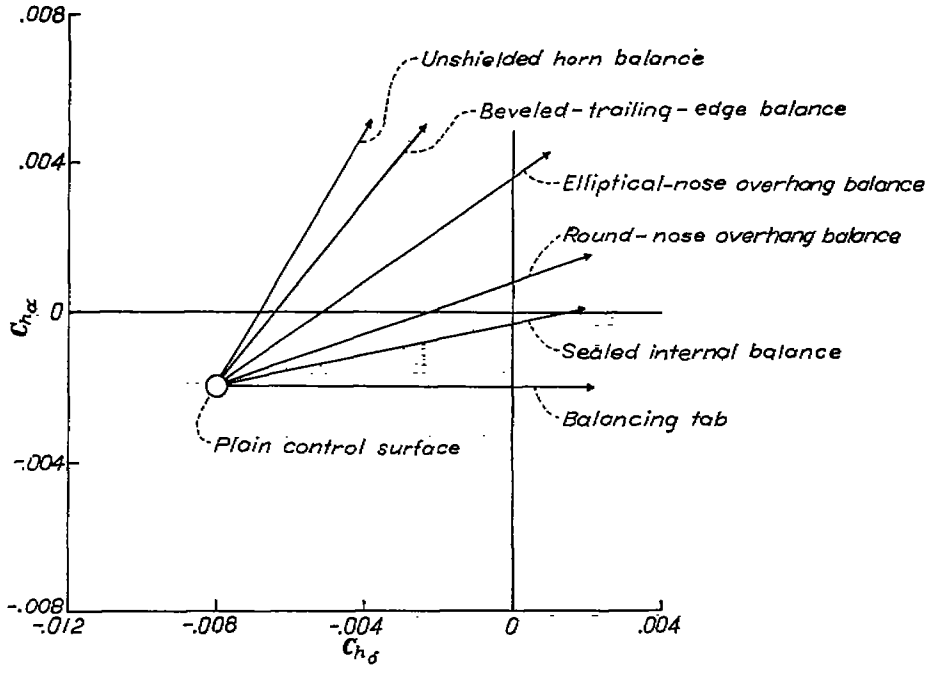

FIGURE 26.—Comparison of effects of various aerodynamic balances on hinge-moment parameters of typical control surface.

The variation of sideslip angle with speed in the power-on condition (fig. 27) may influence the elevator angle required for trim and hence the static longitudinal stability as measured in flight. The sideslip angle will affect the elevator angle required for trim in cases where there is a pitching moment due to sideslip. Frequently the pitching moment due to sideslip of a single-engine tractor airplane in the power-on condition is in the nose-down direction. As a result, increased up-elevator deflection will be required for trim at lower speeds. This effect results in an increase in static longitudinal stability. This effect of sideslip must be considered when comparing flight and wind-tunnel predictions of static longitudinal stability. The use of this effect to increase stability does not appear very desirable, inasmuch as a large pitching moment due to sideslip is inherently undesirable.

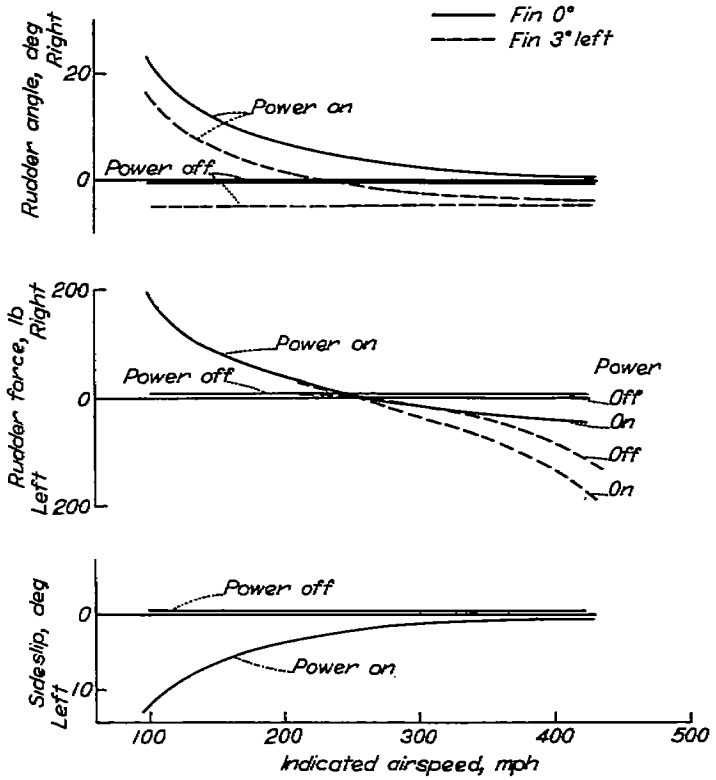

FIGURE 27.—Typical variations of rudder angle, rudder force, and sideslip angle with speed in straight flight with wings laterally level. Single-engine tractor airplane.

The variation of rudder force with speed is caused by the effects of power and by distortion effects on the rudder fabric at high speed. In the power-off condition an airplane with zero fin offset would be expected to require no rudder deflection or rudder force for trim at any speed. The right rudder force which is shown by figure 27 to be required for trim in the low-speed power-on condition results from the right rudder deflection required. The left rudder forces required for trim at very high speed would occur if the fin were offset with leading edge to the left, for the same reason that the elevator force variation with speed depends on stabilizer setting. On actual airplanes the fin is frequently offset to the left in order to reduce the rudder deflection required for trim at low speed. This practice appears inadvisable on high-speed airplanes because of its adverse effect on the rudder trim forces in dives that result from distortion of the rudder.

A possible method for considerably reducing the rudder deflection for trim at low speed without introducing undesirable effects at high speed is to offset the center of gravity of the airplane to the right. This method is effective for the following reasons:

(1) The aileron deflection required for trim at low speed and therefore the aileron yawing moment are thereby reduced.

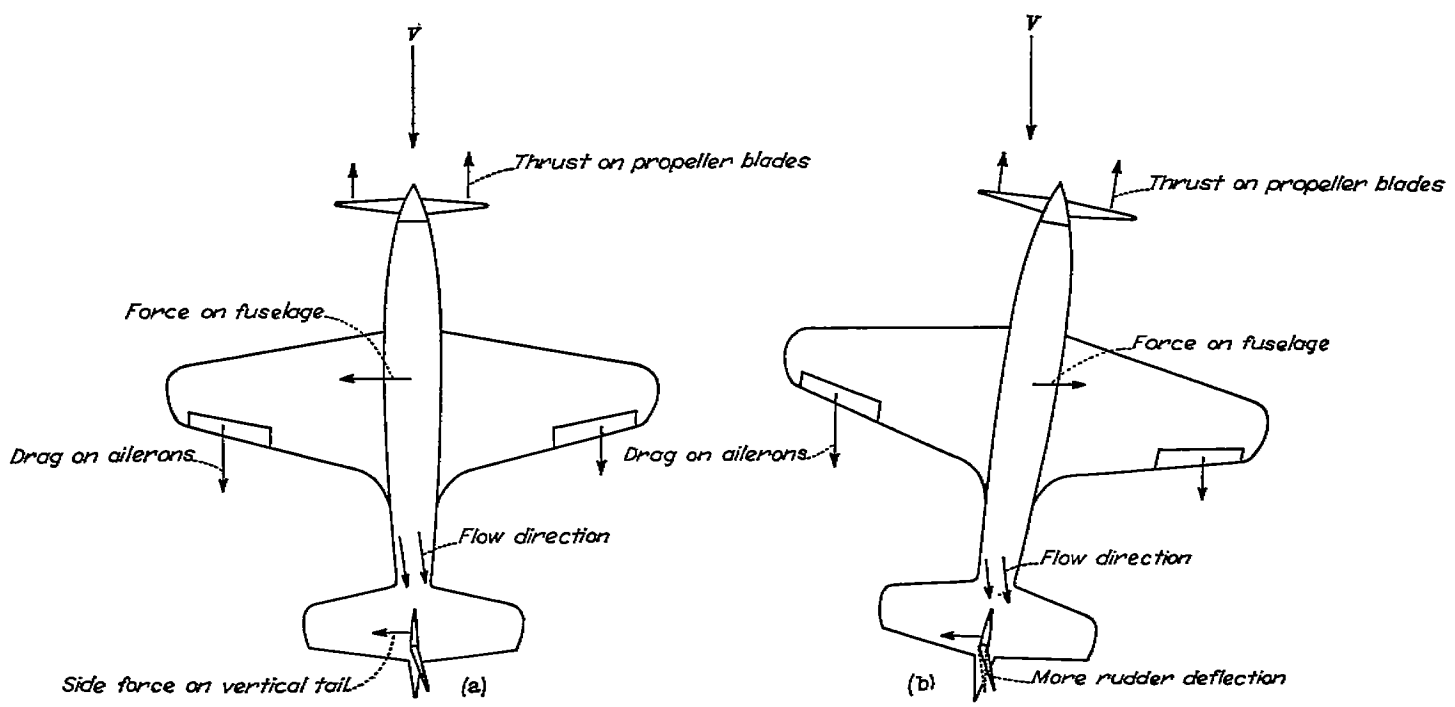

(a) Sideslip=0; side force to left.

(b) Sideslip to left; side force=0; airplane in equilibrium.

FIGURE 28.—Forces and moments acting on single-engine tractor airplane in flight at high angles of attack with wings laterally level. Propeller rotation clockwise when viewed from the rear.

(2) If the thrust force exceeds the drag, the excess of thrust over drag produces a yawing moment to the right about the center of gravity which reduces the rudder deflection required for trim.

(3) Because of the smaller side force on the vertical tail, less sideslip is required for equilibrium and hence the rudder deflection required to produce this sideslip is reduced. The control deflections required when the center of gravity is offset vary inversely as the square of the speed and therefore become very small at high speeds. Flight tests have shown that on a typical single-engine airplane a lateral center-of-gravity shift of 1.8 percent of the wing span reduced the rudder deflection required for trim at minimum speed in the wave-off condition by 10°.

CHARACTERISTICS IN STEADY SIDESLIPS

REQUIREMENTS

Directional stability and control characteristics in sideslips.—Right rudder deflection should be required to hold left sideslip, and vice versa. The variation of rudder angle with sideslip should be approximately linear for angles of sideslip up to ±15°. The variation of rudder force with sideslip should be such that right rudder force should be required to hold a rudder deflection to the right of the trim position, and vice versa. If this requirement is met, the airplane will tend to return to zero sideslip when the rudder is released. For multiengine airplanes the directional stability with rudder free should be such that straight flight can be maintained by sideslipping, at any speed above 140 percent of the stalling speed, with maximum possible asymmetry of power caused by loss of one engine.

Pitching moment due to sideslip.—The variation of elevator angle and elevator force with sideslip angle should be as small as possible. Requirements of different agencies are somewhat different. Flight tests have shown that the pitching moments in sideslips should not be sufficient to produce undesirable changes in acceleration if the elevator is left free. A tentative requirement is that the application of a rudder force of 50 pounds should not produce a change in normal acceleration greater than $0.2g$.

Side-force characteristics.—The variation of side force with sideslip should be such that left bank is required in left sideslips and vice versa.

The lateral stability and control characteristics in steady sideslips are considered in another section.

DISCUSSION OF EQUILIBRIUM OF AN AIRPLANE IN A STEADY SIDESLIP

In a steady sideslip the airplane flies straight with constant attitude and speed and must therefore be completely in equilibrium. In order to maintain this condition the rudder is deflected until the yawing moment is zero. The ailerons are deflected to make the rolling moment zero and the elevators are deflected to make the pitching moment zero. The airplane must bank so that the lateral component of gravity offsets the aerodynamic side force on the fuselage caused by sideslip. The relation between the angle of bank and the angle of sideslip may be derived by referring to figure 29

$$W \sin \phi = C_Y qS$$

$$= \beta \frac{\partial C_Y}{\partial \beta} qS$$

or for small angles of bank

$$W\phi = \beta \frac{\partial C_Y}{\partial \beta} qS$$

$$\frac{\phi}{\beta} = \frac{\frac{\partial C_Y}{\partial \beta} q}{W/S}$$

$$= \frac{\partial C_Y/\partial \beta}{C_L} \tag{37}$$

This relation shows that at low speeds or high lift coefficients a large amount of sideslip will be required in combination with a small angle of bank in a steady sideslip. At high speed the angle of sideslip corresponding to a given amount of bank is reduced. The formula also shows that an airplane with a small amount of side area will have to sideslip to large angles for relatively small amounts of bank in steady sideslips. If an airplane is banked and an effort is made to raise the low wing by use of the rudder alone, the flight path of the airplane will continue to curve toward the low wing until the sideslip is sufficient to develop side force on the fuselage to offset the lateral component of gravity. A large side-force coefficient is therefore desirable in order to minimize course changes that occur when the airplane is displaced in roll by gusty air.

TYPICAL DEFICIENCIES IN SIDESLIP CHARACTERISTICS

One type of difficulty frequently encountered, known as rudder "lock," is really a condition of rudder-free directional instability that occurs at large angles of sideslip. This difficulty is usually found to be caused by the vertical tail stalling

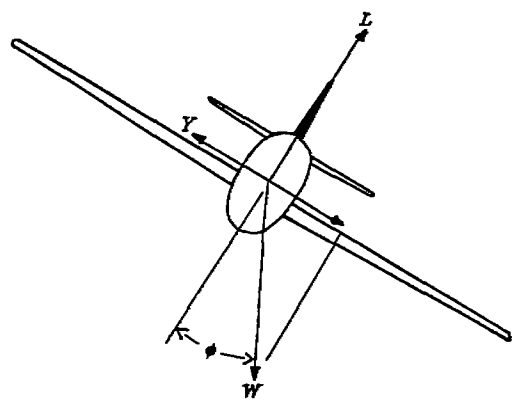

FIGURE 29.—Forces acting on an airplane in a steady sideslip.

or emerging from the slipstream at large angles of sideslip. If an airplane is directionally stable with rudder free, left rudder force will be required to hold the airplane in a right sideslip, and vice versa. When a condition of rudder lock is encountered the rudder floats to an angle greater than that required to hold the airplane in a steady sideslip, and the pilot must exert right rudder force to return the rudder toward neutral when the airplane is in a right sideslip, and vice versa. This condition may be very dangerous on a large airplane because the rudder force required to push the rudder from its stops and start it turning toward neutral may exceed the strength of the pilot.

Directional instability at small angles of sideslip is sometimes encountered, especially in the flap-up condition at high angles of attack. It is sometimes caused by the vertical tail operating in the wake of the fuselage. This type of instability makes it very difficult to hold the airplane on the desired course, especially in maneuvers in which high angles of attack are reached at high speeds. Lack of directional stability at small angles of sideslip may be dangerous in flight at high speeds because in accelerated rolling maneuvers, in which the airplane is subjected to large yawing moments, angles of sideslip may build up sufficiently to exceed the design load of the vertical tail.

Negative dihedral effect may be encountered in flight at low speed with power on, especially in the flaps-down condition, even though the airplane may have positive dihedral effect in high-speed flight. The causes of this condition are discussed in subsequent sections. Negative dihedral effect is undesirable, but it is not considered to be a dangerous condition provided that the aileron control is more than adequate to hold up the leading wing in a sideslip with full rudder.

CONTRIBUTIONS OF VARIOUS AIRPLANE COMPONENTS TO THE DIRECTIONAL STABILITY

Directional stability of the fuselage.—The variation of yawing moment with sideslip for a fuselage is difficult to predict because of the irregular shape of the fuselage. The effect of the fuselage cannot be neglected, however, because it usually contributes a large unstable variation of yawing moment with sideslip. Theoretical attempts to predict the directional instability of the fuselage have been based on calculations of the yawing moments on ellipsoids in an ideal fluid. The flow around an ellipsoid in an ideal fluid does not simulate the flow around an actual fuselage and for this reason the theoretical calculations exaggerate the directional instability. These calculations do show that the directional stability of the fuselage depends principally on its dimensions as seen in the side view and does not depend to any large extent on its thickness. Since yawing moments of fuselage shapes are frequently presented in the form of yawing-moment coefficients based on the fuselage volume, care should be taken to convert these results to the basis of side dimensions when they are applied to prediction of the moments on a body with different cross-sectional shape. In order to predict the directional stability of an actual fuselage, wind-tunnel-test results for a similar fuselage shape are preferred. Wind-tunnel results are frequently presented as the variation of aerodynamic forces and moments with angle of yaw, rather than angle of sideslip. Angle of yaw is defined as the angle of the longitudinal axis of the airplane with respect to a fixed direction, whereas angle of sideslip is the angle of the longitudinal axis with respect to the direction of the relative wind. For an airplane in straight flight or in a wind tunnel, the angle of yaw is equal to the negative of the angle of sideslip, and the two angles may be used interchangeably. When any type of maneuver involving turning is analyzed, however, the two angles must be considered separately. In the present paper the term "angle of sideslip" will therefore be used in the text when the angle with respect to the relative wind is being considered. Some of the figures presenting wind-tunnel data, however, are given in terms of angle of yaw in accordance with usual wind-tunnel practice.

One of the factors contributing to the problem of rudder lock is the fact that the unstable yawing moments from the fuselage and propeller continue to increase when large angles of sideslip are reached, whereas the stabilizing effect of the vertical tail may decrease when it stalls or emerges from the slipstream. Figure 30 shows the variation of yawing moment with angle of yaw for an isolated fuselage with circular cross section. The effect of small fins added on the rear part of the body is also shown. The addition of fins makes the fuselage very stable at large angles of sideslip though it does not affect the instability at small angles of sideslip.

Propeller yawing moments.—A tractor propeller gives an unstable variation of yawing moment with sideslip because it behaves like a vertical fin located ahead of the center of gravity. The instability contributed by the propeller may

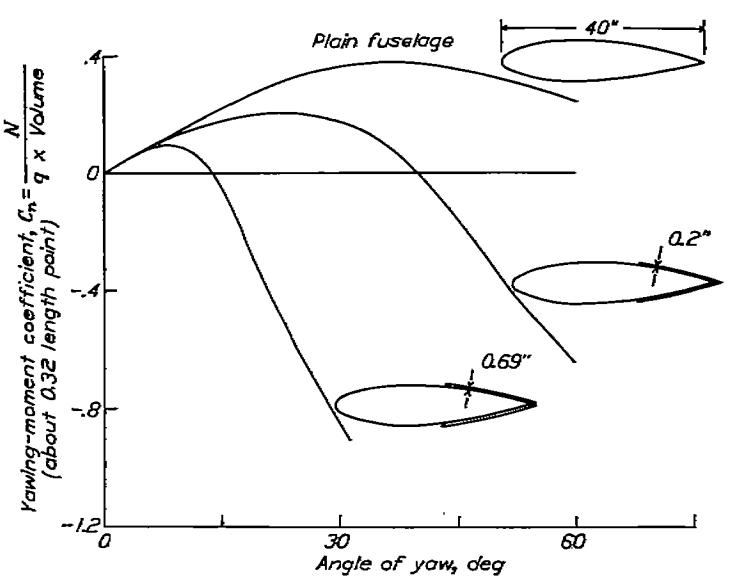

FIGURE 30.—Effect of small fins on the yawing moments of a fuselage with circular cross section.

be accurately estimated from theoretical calculations of the direct propeller forces, such as those given in reference 9. The propeller also affects the flow conditions at the vertical tail and so influences its contribution to the directional stability.

Wing yawing moments.—The variation of yawing moment with sideslip for the wing is generally small. A wing with positive geometric dihedral will give a slight destabilizing effect because of the influence of the lift force on the yawing moments. The reason for the unstable variation of yawing moment with sideslip is shown in figure 31. The lift vectors are drawn perpendicular to the relative wind and perpendicular to the surface of the wing. Yawing moments contributed by the induced drag in a steady sideslip are small because the ailerons are used to balance out the rolling moment and hence tend to equalize the lift on the two sides of the wing. For conventional designs the contribution of the isolated wing to the directional stability is very small, but it may become important in the case of tailless airplanes.

Yawing moments from the vertical tail.—The vertical tail is designed to overcome the unstable yawing moments contributed by the propeller, wing, and fuselage. The yawing moments produced by the vertical tail may be estimated from the following formula:

$$N_T=\alpha_T\left(\frac{\partial C_N}{\partial \alpha}\right)_T q_T S_T l$$
$$=\beta\left(1-\frac{\partial \sigma}{\partial \beta}\right)\left(\frac{\partial C_N}{\partial \alpha}\right)_T q_T S_T l \qquad (38)$$

In practice the quantities entering into this formula are difficult to estimate accurately. The principal source of error is the determination of the area and effective aspect ratio of the vertical tail. Inasmuch as tests have shown that the portion of the vertical tail located behind the fuselage contributes very little to the directional stability, it appears desirable to base these quantities only on the portion of the vertical tail located above the fuselage. The aspect ratio of the vertical tail should be increased by a factor ranging in value from 1.2 to 1.5 to take into account the end-plate effect of the horizontal tail. The sidewash and dynamic pressure at the vertical tail must also be estimated. The sidewash and dynamic pressure that exist in the propeller slipstream may be determined from various theoretical or experimental data. Interference effects from the wing and fuselage also have a large effect on the sidewash and dynamic pressure at the vertical tail. These effects are discussed in reference 25. Wind-tunnel tests have shown that a favorable sidewash factor $\frac{\partial \sigma}{\partial \beta}$ as large as -0.4 may exist for low-wing airplanes. On the other hand for high-wing airplanes an unfavorable sidewash factor of 0.6 has been measured. Tests of powered models of actual airplanes have generally shown much smaller sidewash effects. The average favorable sidewash for low-wing models seems to be approximately -0.1, to which the propeller sidewash should be added. The dynamic pressure at the tail may be assumed equal to that in the propeller slipstream for airplanes with clean canopies, but for airplanes with poorly shaped canopies the vertical tail area in the wake of the canopy must be assumed to be relatively ineffective.

DESIGN CONSIDERATIONS FOR PREVENTION OF RUDDER LOCK

The yawing moments contributed by the fuselage, propeller, and vertical tail may increase with sideslip somewhat as shown in figure 32. The yawing moment given by the tail does not increase beyond about 15° sideslip because the tail reaches the stall angle and also emerges from the slipstream, whereas the yawing moments given by the propeller and fuselage continue to increase all the way to about a 45° angle of sideslip. For this reason the airplane may become directionally unstable at large angles of sideslip even with

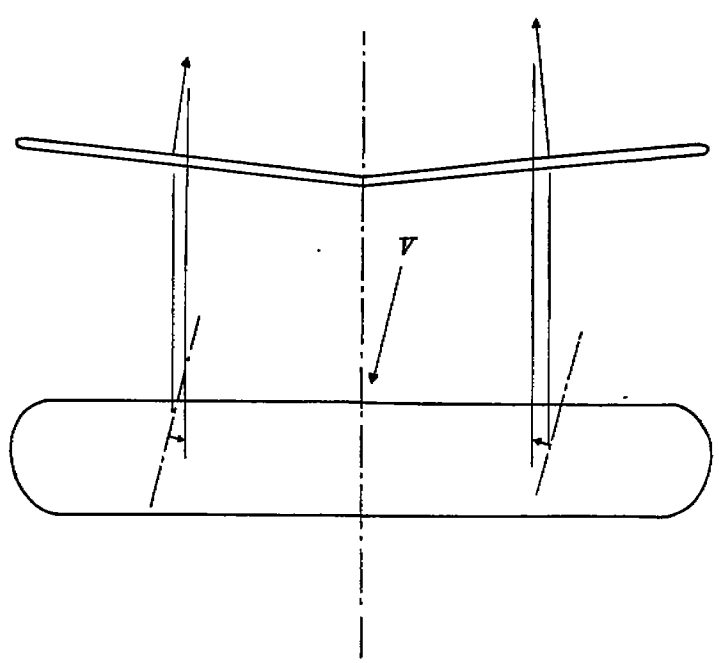

FIGURE 31.—Illustration of cause of unstable variation of yawing moment with sideslip for a wing with dihedral.

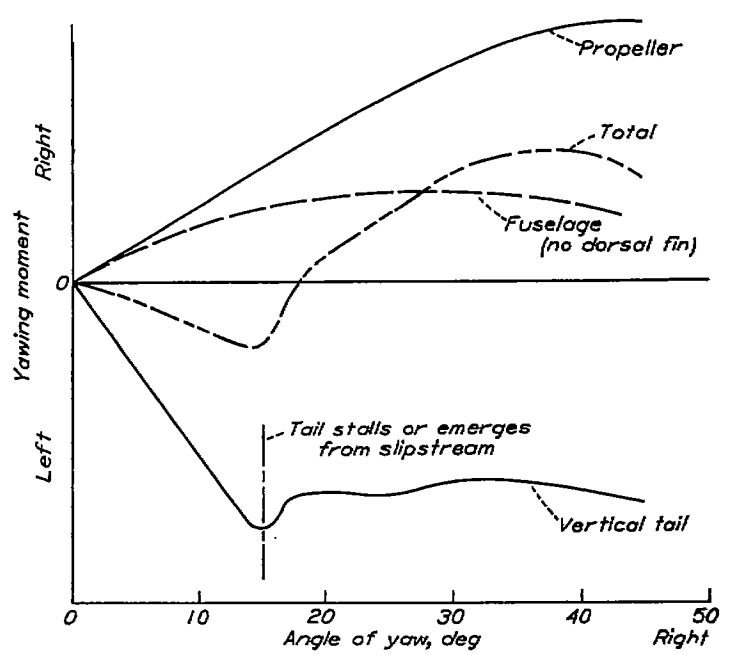

FIGURE 32.—Variation with sideslip of the yawing moments contributed by the propeller, fuselage, and vertical tail for a single-engine tractor airplane.

the rudder fixed. With rudder free the directional stability will be further decreased because when the vertical tail stalls the rudder always has a large tendency to float with the relative wind no matter what type of balance is used. (See reference 26.) A large amount of directional stability must be added at large angles of sideslip so that the rudder deflection required to hold the airplane in a steady sideslip will exceed the angle to which the rudder tends to float. One method of making the fuselage stable at large angles of sideslip was pointed out previously in the discussion of fuselage yawing moments. This method consisted of the addition of small sharp-edge fins along the rear portion of the fuselage. These fins, known as dorsal or ventral fins, have proved very successful in eliminating rudder lock on many actual airplanes. Another method that has been proposed to prevent rudder lock consists of placing vertical tail surfaces at the tips of the horizontal tail. These surfaces tend to preserve the directional stability up to larger angles of sideslip because they remain in the slipstream longer. Wind-tunnel tests showing the effect on the yawing moments of dorsal fins and of end plates on the horizontal tail of a typical single-engine fighter airplane are shown in figure 33. Note that the curves pass through zero because of the use of contrarotating propellers. With single rotation, the curves for power-on conditions are displaced at zero sideslip, and thus rudder-force reversal is caused at a still smaller angle of sideslip in one direction (normally in right sideslips).

DIHEDRAL EFFECT

Requirements.—The dihedral effect as indicated by the variation of aileron angle with sideslip in steady sideslips should be such that up aileron is required on the leading wing. The variation of aileron angle with sideslip should be approximately linear. The variation of aileron force with sideslip angle should be such that the stick will tend to return toward its trim position at zero sideslip when it is released. This requirement is equivalent to stating that the dihedral effect shall be positive with stick fixed or stick free.

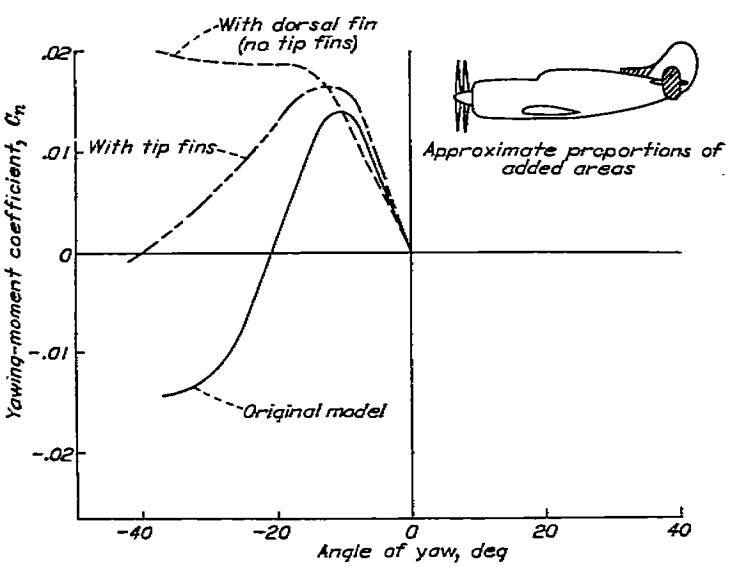

FIGURE 33.—Wind-tunnel measurements showing effect on the directional stability characteristics of a dorsal fin and of vertical fins on the tip of the horizontal tail of a single-engine fighter airplane. Power-on condition (contrarotating propellers); rudder free.

The maximum allowable dihedral effect is specified indirectly by the following requirements:

(1) When the airplane is displaced laterally and the controls are released, the resulting oscillation should damp to one-half amplitude in less than 2 cycles.

(2) The rolling velocity in a roll made with rudder fixed should never decrease to zero as a result of the sideslip produced in the roll.

The foregoing requirements for the maximum allowable dihedral effect are rather lenient and a more severe requirement should possibly be provided. Some airplanes with large dihedral effect and low directional stability have proved objectionable because of the violence of the rolling motion caused by small movements of the rudder in high-speed flight. Further research is required before a definite requirement can be formulated to cover this condition.

Definition of effective dihedral.—The geometric dihedral angle is defined as the angle, as seen in the front view, between the wing panels of an airplane and the spanwise axis of the airplane. The effective dihedral angle may differ from the geometric dihedral angle because of the interference effects of the fuselage and propeller slipstream. The effective dihedral of an airplane is defined as the number of degrees of geometric dihedral that would be required on an isolated wing of the same plan form to give the same variation of rolling-moment coefficient with sideslip. The effective dihedral is taken on the basis that it is constant from the root to the tip of the wing. Thus, a wing with tips up turned at a 45° angle might have about 10° effective dihedral.

The variation of rolling moment with sideslip per degree dihedral for wings of various plan forms and aspect ratios has been determined theoretically and may be obtained from various papers, such as reference 27. For an aspect ratio of 6, 1° of effective dihedral corresponds to a value of $\frac{\partial C_l}{\partial \beta}$, the variation of rolling-moment coefficient with sideslip angle, of 0.0002 per degree.

Influence of wing location, power, and sweepback on effective dihedral.—Ordinarily a high-wing arrangement has about 3° more effective dihedral than geometric dihedral. A low-wing arrangement has about 3° less effective dihedral then geometric dihedral.

The effective dihedral on a tractor-type airplane frequently decreases with the application of power. This condition is most marked in the climbing condition with flaps down at low speeds because in this condition the ratio of dynamic pressure in the slipstream to free-stream dynamic pressure is highest. The reason for the decrease in effective dihedral with power is illustrated in figure 34. The decrease in dihedral effect is caused by the additional lift developed by the trailing wing when the slipstream, which is deflected in the sideslip, covers a larger area of that wing. The lift results in a rolling moment tending to raise the trailing wing. Because of the increase in the thrust coefficient as the speed is decreased, the effective dihedral in power-on conditions of flight becomes progressively more negative (unstable) as the lift coefficient increases.

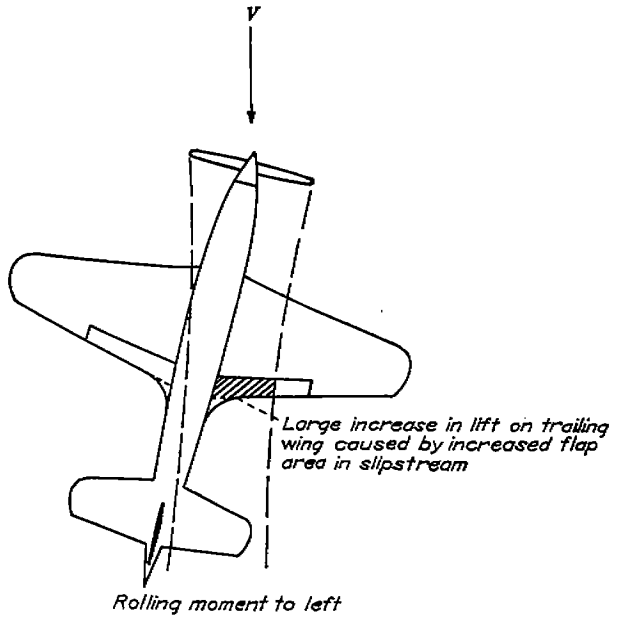

FIGURE 34.—Illustration of unstable dihedral effect caused by power (tractor-type airplane).

A wing with sweepback is found experimentally to have a positive dihedral effect that increases in proportion to the lift coefficient. This effect may be used to offset the decrease in dihedral effect due to power. A typical example of the variation of effective dihedral with lift coefficient for an airplane in the power-on condition is given in figure 35. The beneficial effect of a relatively small amount of sweepback in avoiding negative dihedral effect at high lift coefficients is shown. With flaps down sweepforward or sweepback of the hinge line of the flaps rather than the quarter-chord line of the wing sections is the important factor in determining the dihedral effect. The difficulties encountered with large positive dihedral effect in high-speed flight have been mentioned previously. It is therefore very desirable to reduce as much as possible any increase of dihedral effect with increasing speed. Experience has shown that negative dihedral effect at low speeds is less serious than excessive positive dihedral effect at high speeds. Though sweepback is beneficial in offsetting the decrease in dihedral effect due to power, sweepback of a wing even in small amounts is usually detrimental to its stalling characteristics.

The use of a large amount of sweepback (that is, 30° or more) on jet-propelled aircraft for the improvement of performance at transonic and supersonic speeds generally produces very large positive dihedral effect at high lift coefficients. The increase in dihedral effect with lift coefficient and with sweepback may be estimated qualitatively by calculating the lift on the left and right wings on the assumption that the component of velocity normal to the leading edge is responsible for the lift of the wing. The predictions based on this theory are in fair agreement with experiment so long as the flow on the wing remains unstalled. With large sweep angles, however, flow separation may start at relatively low angles of attack, and the dihedral effect obtained under these conditions increases with lift coefficient less

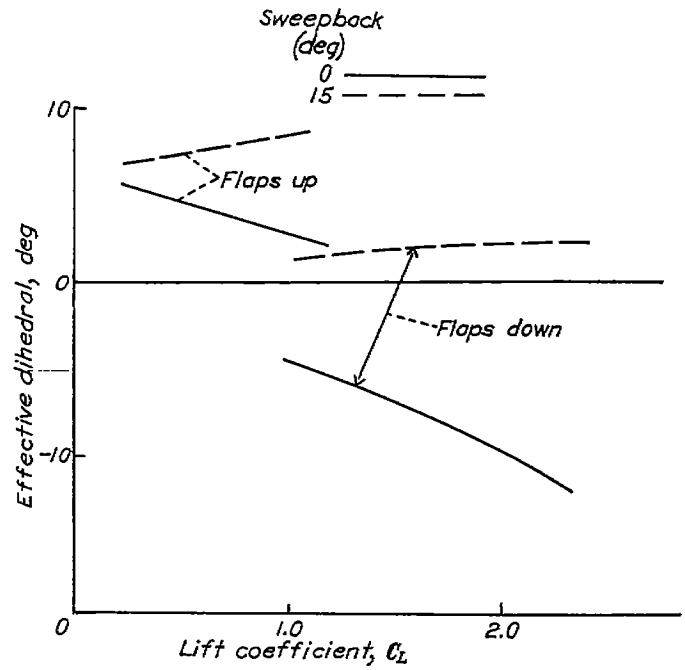

FIGURE 35.—Effect of a moderate amount of sweepback on the variation of effective dihedral with lift coefficient. Single-engine tractor airplane; power-on condition.

rapidly than predicted by the theory. Tests of sweptback wings with sharp leading edges have shown that the dihedral effect changes from positive to negative values at moderate lift coefficients, as a result of stalling of the leading wing. Quantitative data on the dihedral effect and other aerodynamic characteristics of swept wings may be found in reference 28 and many other papers. High dihedral effect at high lift coefficients or low flight speeds is not so objectionable as it would be at high speeds, and acceptable flight characteristics may be obtained provided that the directional stability is also fairly large and the aileron effectiveness is normal.

Measurement of effective dihedral in flight.—From the variation of aileron angle with sideslip measured in steady sideslips the variation of rolling moment with sideslip or the dihedral effect may be determined, provided that the variation of rolling-moment coefficient with aileron deflection is known, by means of the formula

$$\frac{\partial C_l}{\partial \beta}=\frac{\partial \delta_a}{\partial \beta}\frac{\partial C_l}{\partial \delta_a} \tag{39}$$

The variation of rolling-moment coefficient with aileron angle may be obtained from flight measurements of the rolling velocity by means of the formula

$$\frac{\partial C_l}{\partial \delta_a}=C_{l_p}\frac{\partial\left(\frac{pb}{2V}\right)}{\partial \delta_a} \tag{40}$$

The damping in roll C_{l_p} may be obtained for wings of various plan forms from theoretical calculations. The value of C_{l_p} is between 0.4 and 0.6 for unswept wings of normal aspect ratios.

AILERON CONTROL CHARACTERISTICS

REQUIREMENTS FOR SATISFACTORY AILERON CONTROL

Early research on lateral-control devices was concerned mainly with improvement of the lateral control of the airplane beyond the stall. Attempts were made on the basis of this work to set up requirements for satisfactory aileron control characteristics. One proposed criterion stated that the ratio of rolling-moment coefficient to lift coefficient should exceed a certain value. This criterion would in effect require an airplane to have a rolling velocity that varied inversely as the airspeed. Measurements of flying qualities of numerous airplanes have shown that a criterion of this type does not conform to the pilots' opinions of satisfactory rolling performance. With conventional ailerons the rolling velocity obtained with a given aileron deflection increases in proportion to the speed. The reason for this increase is that the ailerons introduce an effective twist into the wing that causes the airplane to roll essentially on a geometric helix. In a steady roll with a given aileron deflection, therefore, the airplane always rolls through the same angle of bank in traveling a given distance no matter what the airspeed.

The concept that the airplane describes a helix when it rolls has led to the practice of specifying the rate of roll in terms of the helix generated by the wing tip. The tangent of this helix angle is given by the expression $pb/2V$ as shown in figure 36. In practice $pb/2V$ is of the order of 0.1 or less so that it is sufficiently accurate to consider the tangent equal to the angle expressed in radians. For this reason, $pb/2V$ is generally called the helix angle.

Flight tests of numerous airplanes have shown that pilots demand a higher rolling velocity as the speed is increased and they also require that a small airplane should be able to roll faster than a larger airplane. These observations lead to the conclusion that the rolling ability of any airplane will be considered satisfactory by pilots if the value of $pb/2V$ is greater than a certain amount. Tests have shown that the rolling ability of an airplane is considered satisfactory when the value of $pb/2V$ exceeds 0.07 radian. (See reference 29.) This criterion is consistent with logical design of the airplane, because geometrically similar wing-aileron arrangements of different sizes with a given aileron deflection will have the same helix angle independent of size or airspeed. If a given rolling velocity were required to satisfy the pilots, the aileron proportions would have to increase rapidly with the size of the airplane.

With an aileron control system in which the ailerons are directly linked to the control stick, the pilot is generally unable to obtain full deflection of the ailerons above some definite speed because the stick force required becomes too large. For nonmilitary airplanes the requirements state that full aileron deflection should be obtainable with 30-pound stick force or 80-pound wheel force up to 0.8 times the maximum level-flight speed. Combat experience with military airplanes has emphasized the importance of rolling ability in both normal flight and high-speed dives. The present Army and Navy requirements, therefore, specify that large values of $pb/2V$ or rolling velocity should be available up to the maximum diving speeds of fighter-type airplanes with the stick force not exceeding 30 pounds. The Army and Navy requirements also specify a value of $pb/2V$ considerably greater than 0.07 for low-speed or cruising flight in order to provide for rolling ability greater than that desired simply on the basis of satisfactory handling characteristics.

In addition to the previously stated requirements for aileron effectiveness and stick force, the following requirements must be satisfied:

(1) The aileron force and rolling velocity should vary approximately linearly with aileron deflection and the stick force should be sufficient to return the control to neutral when the stick is released.

(2) The rolling acceleration should always be in the correct direction and should reach a maximum value no more than 0.2 second after the ailerons are deflected; this requirement has always been met by conventional ailerons but certain types of spoiler ailerons have proved unsatisfactory because of excessive lag or initial reversal in their action.

TYPICAL AILERON CONTROL CHARACTERISTICS

If the ailerons are suddenly deflected, an airplane ordinarily reaches its steady rolling velocity very rapidly. For this reason only the steady rolling velocity is considered in the requirements for aileron effectiveness. If the rudder is held fixed during the roll, the rolling velocity may decrease after it reaches the maximum because of the sideslip developed during the roll. Any sideslip in conjunction with the dihedral effect of the airplane introduces a rolling moment

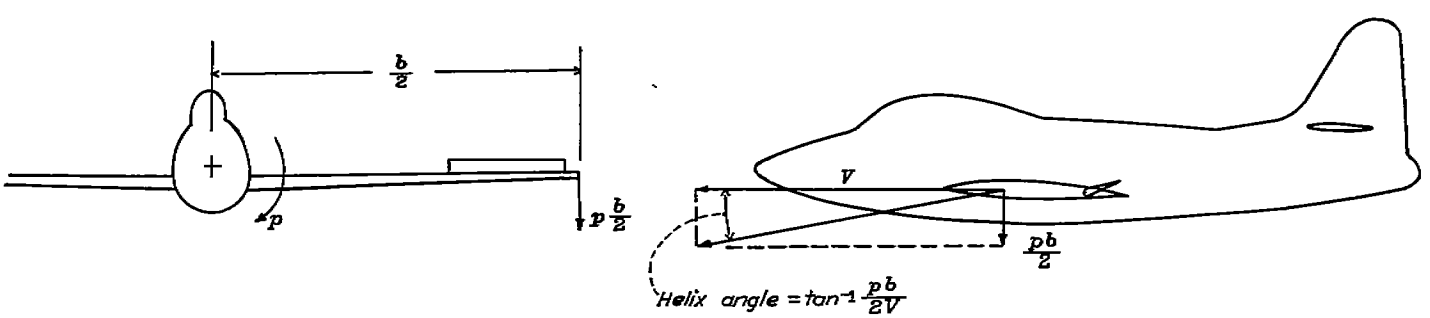

FIGURE 36.—Derivation of the formula for helix angle.

opposite to that given by the ailerons. If the rudder is used to maintain zero sideslip, the rolling velocity may continue to increase during the roll because of the rolling moment due to yawing velocity. Typical time histories of rudder-fixed rolls are given in figure 37. Although in normal flight the rudder is coordinated with the ailerons to avoid excessive sideslipping, tests for aileron control characteristics are usually made with the rudder fixed in order to obtain a maneuver that can be reproduced.

The variation of aileron effectiveness with speed is ordinarily similar to that shown in figure 38. This diagram shows that with a rigid wing a constant value of $pb/2V$ should be obtained at all speeds with full aileron deflection. In practice, however, the ailerons cause the wing to twist in such a way as to reduce the rolling velocity, until at some very high speed, known as the aileron reversal speed, the wing twist completely offsets the effect of aileron deflection and the ailerons fail to produce rolling velocity. The aileron reversal speed should, of course, be well above the maximum diving speed of an airplane. A method for estimating the aileron reversal speed is given in reference 9. Figure 38 also shows that some loss in aileron effectiveness may be expected near the stall because of reduction in the rolling moments given by the ailerons and because of the increased sideslip reached in rolls at low speed. With a given stick force the pilot can fully deflect the ailerons up to some definite speed but at higher speeds the aileron deflection is reduced because of the high stick forces, hence the value of $pb/2V$ is reduced. This reduction is illustrated in figure 38.

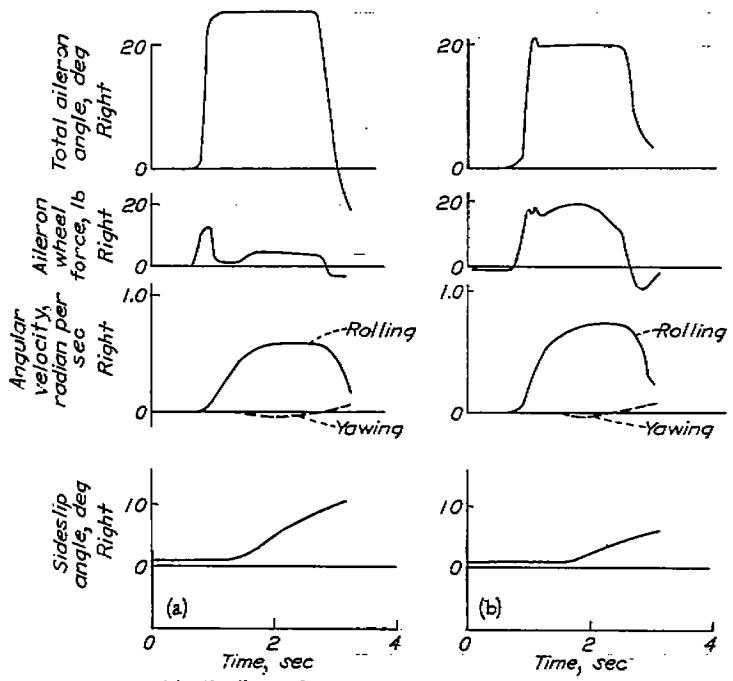

(a) 140 miles per hour. (b) 200 miles per hour.

FIGURE 37.—Time histories of typical rudder-fixed aileron rolls in a medium-bomber airplane.

With a given aileron configuration and conventional types of aileron balance, the aileron performance at low speed may be improved at the expense of high-speed characteristics by increasing the aileron travel while keeping the same stick travel. Conversely, the aileron effectiveness at high speeds may be improved at the expense of low-speed rolling ability by decreasing the aileron travel while keeping the same stick travel. These effects are shown in figure 39. With increased aileron travel, the value of $pb/2V$ for full aileron deflection is increased but the speed above which the pilot is unable to obtain full aileron deflection is reduced because of the reduced mechanical advantage of the stick over the ailerons.

CALCULATION OF ROLLING EFFECTIVENESS

The value of $pb/2V$ attainable with a given aileron deflection and with given wing and aileron dimensions can be calculated accurately enough for design purposes. The rolling velocity may be estimated within about ±10 percent for conventional types of ailerons in unstalled flight. The calculation is based on the assumption that in a steady roll the rolling moment due to the ailerons is equal to the damping moment in roll

$$L_a=L_p=C_{l_p}\left(\frac{pb}{2V}\right)qSb \tag{41}$$

The damping moment is caused by the increased angle of attack on the downgoing wing and the reduced angle of attack on the upgoing wing. Formula (41) shows that this moment is proportional to the helix angle, the dynamic pressure, and the product of area and span of the wing. If formula (41) is expressed in coefficient form, the following result is obtained:

$$C_{l_a}=C_{l_p}\left(\frac{pb}{2V}\right) \tag{42}$$

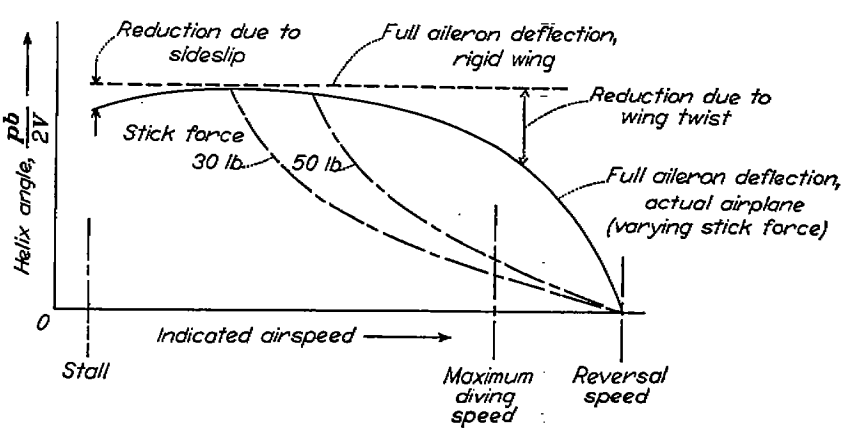

FIGURE 38.—Typical variation of aileron effectiveness with speed.

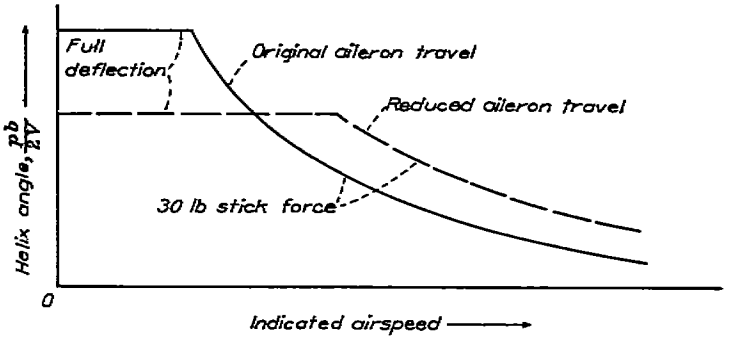

FIGURE 39.—Effect of changing aileron travel while keeping same stick travel on the variation of aileron effectiveness with speed.

The damping-moment coefficient C_{l_p} is a function only of the wing plan form. Its value has been calculated theoretically and may be found in reference 27 as a function of wing aspect and taper ratios. The value of $pb/2V$ may be readily calculated if the aileron rolling-moment coefficient is known. This quantity may be determined from wind-tunnel tests or may be determined with equal accuracy from the aileron dimensions by the following procedure. The aileron rolling-moment coefficient may be expressed in the form

$$C_{l_a}=\delta_a\left(\frac{C_{l_\delta}}{\tau}\right)\tau \tag{43}$$

where the coefficient C_{l_δ} is equal to $\frac{\partial C_l}{\partial \delta_a}$ and the value of τ is the ratio of the variation of section lift coefficient with aileron deflection to the variation of section lift coefficient with angle of attack. Notice that the symbol τ is equivalent to the symbol k used in reference 27. The value of $\frac{C_{l_\delta}}{\tau}$ represents the rolling-moment coefficient that would be given by a wing if the spanwise part that includes the ailerons were twisted 1 radian. When this quantity is multiplied by τ, the rolling-moment coefficient is reduced to correspond to 1 radian of aileron deflection. The value of $\frac{C_{l_\delta}}{\tau}$ may be found in reference 27 as a function of the wing aspect and taper ratios and of the spanwise location of the aileron. The value of τ may be obtained from section data but more accurate calculations may be made by computing from values of $pb/2V$ measured in flight a value of τ for ailerons of a type similar to those under consideration. A somewhat more exact procedure for calculating the value of $pb/2V$ is given in reference 9.

AMOUNT OF AILERON BALANCE REQUIRED FOR SATISFACTORY CHARACTERISTICS

The following example illustrates the degree of aerodynamic balance required for ailerons on airplanes of various sizes. Consider a fighter-type airplane with the dimensions shown in figure 40. The value of $pb/2V$ reached with $\pm 15°$ aileron deflection may be calculated as follows: For 20-percent-chord plain ailerons, assume that $\tau=0.4$. From reference 27:

$$C_{l_p}=0.46$$

$$\frac{C_{l_\delta}}{\tau}=0.3$$

From formula (43)

$$C_{l_a}=\frac{15}{57.3}\,(0.3)\,(0.4)=0.0314$$

From formula (42)

$$\frac{pb}{2V}=\frac{0.0314}{0.46}=0.068 \text{ radian}$$

The stick forces are calculated by assuming that plain ailerons with no aerodynamic balance are used. The following typical values are assumed for the hinge-moment parameters:

$$C_{h_\delta}=-0.007$$

$$C_{h_\alpha}=-0.003$$

Assume 9 inches stick travel is required to deflect each aileron 15°. The force required per aileron is then determined from the aileron hinge moment as follows:

$$F\Delta X_s=H\Delta\delta_a \tag{44}$$

$$F\left(\frac{9}{12}\right)=H\left(\frac{15}{57.3}\right)$$

$$F=0.35H$$

The hinge moment is given by the equation

$$H=(\Delta\alpha C_{h_\alpha}+\Delta\delta_a C_{h_\delta})\,qb_a c_a^2 \tag{45}$$

where $\Delta\alpha$ is the change in angle of attack at the aileron caused by the rolling velocity. This change in angle of attack at the wing tip is equal to the value of $pb/2V$. The change in angle of attack at any point on the aileron may be calculated

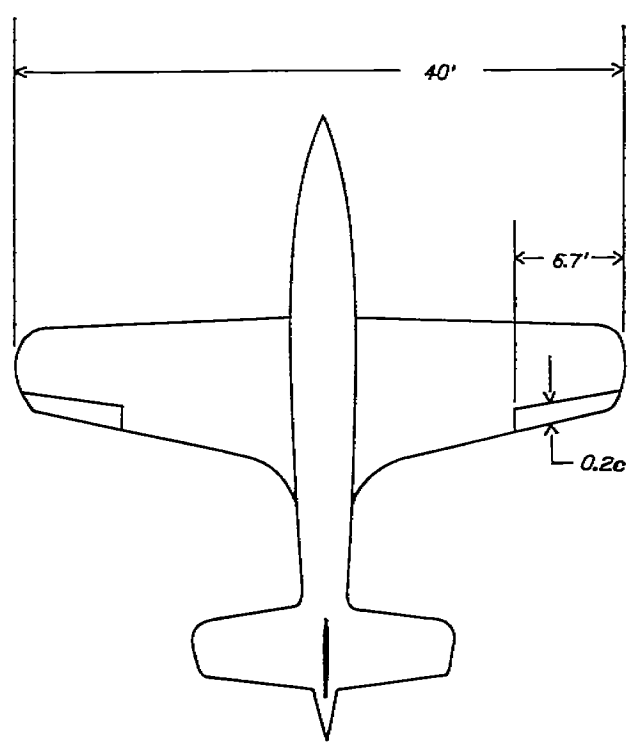

FIGURE 40.—Airplane dimensions used in example for calculation of aileron control characteristics. Taper ratio, 0.5; aspect ratio, 6; aileron root-mean-square chord, 1 foot; aileron travel, ±15°; and stick travel, ±9 inches.

by multiplying $pb/2V$ by the ratio $\frac{2b'}{b}$, where b' is the distance from the longitudinal axis to this point on the aileron and b is the wing span. More complete analyses, such as that given in reference 11, have shown that a point near the inboard end of the aileron should be used to give the best average measure of the angle-of-attack change.

In the present example

$$\Delta\alpha=\frac{pb}{2V}\frac{2b'}{b}$$
$$=(0.068)\frac{28}{40}$$
$$=0.048 \text{ radian or } 2.8°$$

where b' is the distance from the longitudinal axis to a point on aileron 0.7 foot from the inboard end. From equation (45), the hinge moment on the fully downward deflected aileron is

$$H=[(-2.8)(-0.003)+15(-0.007)]\,q\,(6.7)(1)^2$$
$$=-0.00077V^2 \text{ foot-pounds}$$

where V is in feet per second.

The variation with airspeed of stick force to deflect two ailerons is therefore as shown in figure 41. With plain ailerons, full deflection cannot be reached with 30 pounds stick force above 158 miles per hour. Above this speed, the deflection and hence the value of $pb/2V$ vary inversely as the square of the speed.

In order to meet the present Army or Navy requirements for aileron control at high speed, the ailerons on an airplane of this size would have to be aerodynamically balanced to reduce the hinge moments to about 1/3 of those for a plain aileron, even with the ±15° deflection range that was assumed. The aileron deflection range would, however, have to be increased to ±19.5° to meet the low-speed requirement of a value of $pb/2V$ of 0.09. The mechanical advantage of the control stick would therefore be reduced and the hinge moment for full deflection increased and a still closer degree of balance would be required for satisfactory high-speed characteristics.

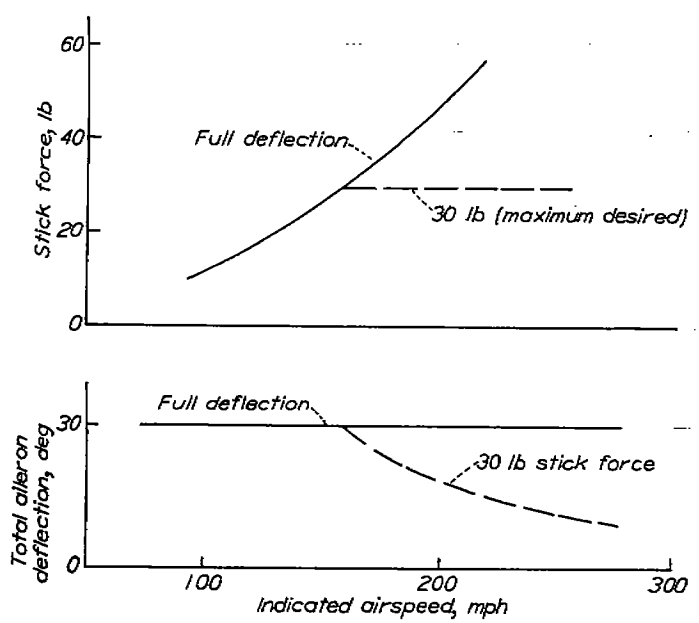

FIGURE 41.—Variation of stick force and aileron deflection with speed for airplane used as example.

Consider next a large bomber of 240-foot span, assumed to have a wing-aileron arrangement geometrically similar to that of the fighter airplane discussed previously. If a stick-type control is assumed, the mechanical advantage of the stick over the ailerons will remain the same. If plain, unbalanced ailerons are again assumed, the only quantity in the equations that changes is the product $b_a c_a^2$. This quantity is multiplied in the ratio $\left(\frac{240}{40}\right)^3$ or 6^3 which equals 216. By use of a wheel-type control, the pilot's mechanical advantage may be increased about 60 percent, so that the forces would be multiplied by $\frac{216}{1.60}$ or 135. The order of magnitude of the wheel forces is indicated in figure 42.

A very close degree of balance of the ailerons (approx. $C_{h_\delta}=-0.00014$ and $C_{h_\alpha}=0.00000$, for example) would be required to reduce the wheel forces to acceptable limits. In practice, this degree of balance is unattainable because minor differences in the contours of the ailerons, within production tolerances, can cause variations in C_{h_δ} and C_{h_α} of ±0.0005. Some type of servo or booster control is therefore required for adequate control of an airplane of this size, or even for one of considerably smaller size. The ailerons should be aerodynamically balanced as far as possible, while a definite force gradient is still maintained, in order to reduce the power requirements for the booster.

NOTES ON AILERON BALANCE, FRISE AILERONS, AND SPOILERS

The example given previously showed that the change in angle of attack at the aileron during the roll was about 1/5 the change in aileron deflection. A given change in the value of C_{h_α} will therefore have only 1/5 as much effect on aileron forces as the same change in the value of C_{h_δ}. The aileron control-feel characteristics are not markedly affected by the

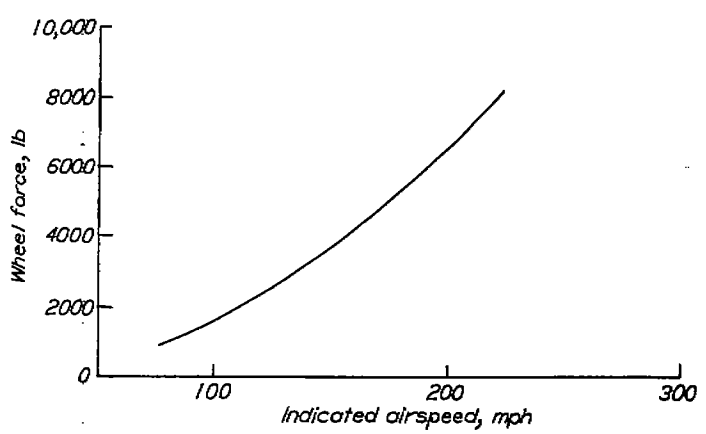

FIGURE 42.—Aileron wheel force for full aileron deflection as a function of speed for airplane with 240-foot span. Unbalanced ailerons.

ratio of the values of C_{h_α} and C_{h_δ} although when C_{h_α} is positive, the control force required to deflect suddenly the ailerons will be lighter than the final force reached in a steady roll; whereas when the value of C_{h_α} is negative, the opposite will be true. All the types of control-surface aerodynamic balance discussed previously have been sucessfully applied to ailerons.

Certain additional means of providing aerodynamic balance for ailerons have been frequently used. These methods depend upon balancing the system consisting of the two ailerons and their connecting linkage rather than balancing each aileron individually. In the case of one frequently used type of aileron balance, called the Frise aileron, the upgoing aileron is overbalanced and therefore helps to deflect the downgoing aileron. In using this arrangement the control system must be very rigid so that the upgoing aileron will not deflect to excessively large angles and cause the system to overbalance at high speeds. A differential linkage is frequently employed in conjunction with Frise type ailerons as well as with other types of ailerons. With this arrangement the upgoing aileron deflects through a larger range than the downgoing aileron. If both the ailerons have an upfloating tendency (trailing edge tending to go up), the differential linkage will result in reduced stick forces.

The use of spoiler-type ailerons has been proposed to permit increasing the span of the landing flaps, thereby decreasing take-off and landing speed without sacrificing aileron performance. The hinge moments of spoiler-type ailerons may be erratic unless care is taken to use a design that develops very small hinge moments. One successful spoiler arrangement incorporated a thin circular-arc spoiler which develops small hinge moments in conjunction with a small conventional aileron to provide the necessary control forces. The spoiler should be located far back on the chord in order to avoid undesirable lag in its action.

ADVERSE AILERON YAW

Use of the ailerons to produce a rolling moment also introduces a yawing moment for two reasons. When the ailerons are first deflected the induced drag on the side of the downgoing aileron is increased and that on the side of the upgoing aileron is decreased. The difference in induced drag causes a yawing moment. When the airplane starts to roll the lift vectors on the downgoing wing are inclined forward and those on the upgoing wing are inclined backward. A yawing moment is therefore introduced called the yawing moment due to rolling which is in the same direction as the yawing moment due to the ailerons. These two yawing moments tend to swing the nose of the airplane to the right in a left roll, and vice versa. The change in heading is in the opposite direction from that desired and this effect has therefore been called adverse aileron yaw. An additional yawing moment due to the profile-drag differences on the left and right wings when the ailerons are deflected must also be added to the induced yawing moment and the yawing moment due to rolling mentioned previously, but this profile-drag difference is relatively small for conventional ailerons. With spoiler-type ailerons the profile-drag differences may introduce an appreciable favorable yawing moment. Even when spoiler ailerons are used, however, at high lift coefficients this favorable moment is generally smaller than the sum of the adverse yawing moments due to induced-drag differences and due to rolling.

The adverse aileron yawing moment in a roll may be calculated by adding to the yawing moments measured in a wind tunnel the yawing moment due to rolling. The yawing moment due to rolling may be determined as a function of wing plan form by methods from reference 27 and other papers. If wind-tunnel data are not available, the induced aileron yawing moment may be found from theoretical calculations in reference 30. An approximate formula for the adverse yawing-moment coefficient acting in a steady roll is as follows:

$$C_n=\frac{C_L}{8}\frac{pb}{2V} \tag{46}$$

This formula, which is accurate within ±5 percent for ordinary wing plan forms, gives approximately the sum of the yawing moments due to induced drag and due to rolling. The adverse aileron yawing moment is directly proportional to lift coefficient.

REQUIREMENT FOR LIMITS OF YAW DUE TO AILERONS

Since undesirable heading changes occur in maneuvers because of the effects of aileron yaw if the directional stability of an airplane is too small, a requirement in the handling-qualities specifications has been provided to set an upper limit on the sideslip reached in rolls. This requirement states that the change in sideslip occurring in a rudder-fixed roll made with full aileron deflection at 1.2 times the stalling speed should not exceed 20°. It is important that this degree of stability should be obtained at small sideslip angles in order to limit inadvertent sideslipping which causes heading changes in maneuvers involving small aileron deflections such as those used in flying through rough air. Also, it is important to avoid large amounts of sideslip in high-speed flight, as discussed in the following section. Thus, in a roll with 5 percent of full aileron deflection, the sideslip should not exceed 1°. With conventional types of ailerons the designer can do little to reduce the adverse aileron yawing moment. The rudder-fixed directional stability of the airplane must therefore be made sufficiently great to meet the above requirement. In flight tests, this requirement can be checked more conveniently by rolling out of a 45° banked turn, so that excessive angles of bank are not reached before the maximum sideslip is attained.

ROLLING MANEUVERS IN ACCELERATED FLIGHT

When an airplane is rolled out of a pull-out or out of an accelerated turn, the values of $pb/2V$, lift coefficient, and airspeed may all be relatively large. The aileron yawing-moment coefficient will therefore be large, as shown by

formula (46). The amount of sideslip developed in a rudder-fixed roll at high speed in this type of maneuver may therefore equal the amount of sideslip developed in a roll from straight flight near the stalling speed. Reference 31 indicates that because of the high speed, the loads imposed on the vertical tail may be exceptionally large. The provision of adequate directional stability, especially at small angles of sideslip, in order to prevent excessive sideslipping in rolls at high speed is therefore important from structural considerations as well as from the standpoint of providing desirable flying qualities.

STALLING CHARACTERISTICS

REQUIREMENTS FOR SATISFACTORY STALLING CHARACTERISTICS

Conventional airplanes are unable to fly if the flow on the wing has completely stalled. In setting up the requirements for satisfactory stalling characteristics the fact that normal control characteristics cannot be maintained beyond the stall has been considered. The purpose of the requirements is, therefore, to prevent inadvertent entry into a stalled condition of flight and to assure recovery from a stalled condition if the pilot stalls the airplane intentionally.

The required characteristics are as follows: First, the approach to a complete stall should be unmistakable to the pilot. Any of the following characteristics are considered to constitute satisfactory stall warning:

(1) Marked buffeting or shaking of the airplane or control system

(2) Marked rearward motion of the control stick or increase in pull force required to stall the airplane

(3) Sufficiently slow development of instability

(4) A mechanical warning device may be used, in the event that inherent stall warning is not present.

Second, it should be possible to effect a prompt recovery from a complete stall by normal use of the controls. Finally, a desirable characteristic, although not required, is that the rate of roll of the airplane after the stall should be low.

DISCUSSION OF TYPICAL STALLING CHARACTERISTICS

Flight tests have been made by the NACA to determine the stalling characteristics of many different airplanes. In these tests measurements were made of the control motions, accelerations along each of the three axes, angular velocities about each of the three axes, angle of sideslip, and airspeed. In some cases the progression of the stall on the wing has been visualized by means of tufts. Many different types of stall behavior have been observed. In some cases a violent roll without any form of warning occurs at the stall. In a fighter-type airplane the rate of roll has in some cases exceeded 90° per second. In other cases violent oscillatory motion occurs in which the airplane rolls, pitches, and yaws through a fairly large amplitude in an erratic fashion. This type of stall is not so dangerous as the first mentioned type but is, nevertheless, considered unsatisfactory if the violent motion occurs without warning. In some other cases, violent buffeting of the airplane occurs several miles an hour above the minimum speed and full up elevator may be applied without causing the airplane to roll. This type of stall behavior is considered satisfactory. Another type of motion at the stall consists of a gradually increasing oscillation in roll and pitch that, if allowed to continue, may eventually cause the airplane to roll on its back. This type of stall is considered satisfactory if the pilot has time to apply corrective action before the amplitude of the motion becomes excessive.

The stalling characteristics may be markedly different in different conditions of power and flap setting. They may be also affected to a large extent by minor changes in configuration, such as change in cowl-flap position. A stall made from a high-speed turn is frequently more violent than a stall made from straight flight because of the increased aerodynamic moments acting on the stalled airplane.

INFLUENCE OF VARIOUS DESIGN FACTORS ON STALLING CHARACTERISTICS

The stalling characteristics of an airplane cannot be accurately predicted by any available methods. The uncertainty in the prediction of stalling characteristics is due partly to the large number of variables which may influence these characteristics and partly to the lack of an adequate theoretical treatment of phenomena involving flow separation. A few general statements with regard to present knowledge of stalling characteristics will be given in the following paragraphs. In any individual design, however, other factors than those considered may have a large effect on the stalling characteristics. A summary of full-scale wind-tunnel studies of stalling characteristics is given in reference 32.

The progression of the stall on the wing is usually considered to be of primary importance in determining the stalling characteristics. If the stall starts first at the tip and progresses inboard, the type of stall characterized by a violent roll without warning is likely to result. A violent roll is caused because the region of stalled flow is at a large distance from the airplane center line and, therefore, exerts a large rolling moment. As soon as the airplane starts to roll, the angle of attack on the downgoing wing is increased farther beyond the stalling angle while that on the upgoing wing is decreased. As a result the downgoing wing is completely stalled while the upgoing wing remains unstalled. The large rolling moment produced by this asymmetric-flow condition may be accompanied by a large yawing moment which will tend to cause the airplane to enter a spin. Stall warning is likely to be absent because the stalled flow does not strike the tail of the airplane. Aileron control may also be lost because of the stalling of the flow over the ailerons. Initial stalling of the wing tips is likely to be caused by a high degree of taper or by the use of sweepback. In the case of a tapered wing, the induced velocity at the wing caused by the trailing vortices increases the effective angle of attack of sections at the tip and decreases the effective angle of attack of sections at the root. The tips therefore stall first unless the tip airfoil sections are designed to have a higher stalling angle than those at the root.

Sweepback has a similar effect in promoting tip stalling. The flow field about the wing creates an induced velocity and also an induced camber at the tip which tends to promote tip stalling. In addition, the boundary layer tends to flow toward the tip, which helps to prevent separation at the inboard sections.

A stall which starts at the wing root and progresses symmetrically toward the tips is usually considered beneficial. This type of stall may provide warning in the form of buffeting because fluctuations in the flow occur at the tail over a region approximately twice as wide as the region of reduced dynamic pressure in the wake. Furthermore, the large loss of lift at the center portion of the wing may result in a decrease in downwash at the tail. A large nosing-down moment will result and a marked increase in up-elevator deflection or a pull force on the stick will be required to maintain trim. The small moment arm of the stalled area contributes to a low initial rate of roll and the aileron control may be maintained.

Initial stalling of the wing root is promoted by use of a wing of rectangular plan form or by sweepforward. The induced velocities and boundary-layer effects are then opposite from those of the tapered and sweptback wings.

Some factors which may be overlooked in connection with stalling characteristics are as follows:

(1) On a large airplane a stall at the wing root may be unsatisfactory because of excessively violent buffeting of the tail.

(2) The wake from a wing stalled at the root may blanket the vertical tail. As a result rudder control may be lost and the airplane may become directionally unstable. This instability in combination with the high effective dihedral of a stalled wing may result in a violent directional divergence and roll.

(3) "Stability" of the stall pattern is important. In other words, several degrees change in angle of attack should be required for the stall to progress from the root to the tip. If only a small change in angle of attack is required to cause the whole wing to stall, then as soon as the airplane starts to roll the increased angle of attack of the downgoing wing will cause this wing to stall and a violent roll will result. If stability of the stall pattern is attained by means of "washout" of the wing tips, a loss in maximum lift coefficient will necessarily result because not all portions of the wing will reach their maximum lift at the same time. Stability of the stall pattern may, however, be provided by use of slots on the outer portions of the wing. These slots increase the maximum lift coefficient at these stations. This procedure will not result in any loss of maximum lift coefficient.

(4) If the wing stalls first at the trailing edge of the wing root, the spread of the stall to the leading edge rather than outboard on the wing is beneficial. This characteristic causes a large loss in lift as the angle of attack is increased which will cause the airplane to pitch down rather than to roll.

It is possible for some airplanes to have good stalling characteristics even though the tip sections stall first. These desirable characteristics are usually obtained by the use of an airfoil section at the tip which has a so-called flat-top lift curve. With this type of lift curve the airfoil maintains its lift beyond the stall and as a result large rolling moments are not applied to the airplane. Thin highly cambered sections with small leading-edge radii generally have lift curves of this type.

FLIGHT CONDITIONS LEADING TO INADVERTENT STALLING

The handling characteristics of an airplane at speeds above the stall may have a decided effect on the danger of inadvertent stalling. A large pitching moment due to sideslip is undesirable because the pilot has very little ability to judge the amount of sideslip existing in flight at low speed, and because changes in sideslip such as those occurring in a roll out of a turn in the landing approach may result in pitching moments sufficient to stall the airplane. Longitudinal instability in the landing-approach condition also increases the danger of inadvertent stalling because the airplane will tend to stall by itself unless the pilot applies increasing push forces to the stick. Directional instability may result in inadvertent large sideslip angles while rolling into or out of turns. The maximum lift coefficient may be considerably reduced at these large sideslip angles, and the airspeed meter may give false indications, so that the airplane may stall at indicated speeds at which it would normally remain unstalled.

The formation of ice on the leading edge of the wing or on the retaining strips of de-icer boots may have a serious adverse effect on the stalling characteristics of an airplane and may also greatly reduce the maximum lift coefficient.

GROUND LOOPING

Ground looping and stalling characteristics are closely related. Ground looping difficulties have generally been caused by large yawing and rolling tendencies caused by an unsymmetrical stall on the wing of an airplane while it is in the three-point attitude. The ground angle of an airplane with a conventional landing gear should be approximately 2° less than the stalling angle in order to avoid this difficulty. The use of a tricycle landing gear usually eliminates this trouble.

CONTROL-FREE STABILITY OR SHORT-PERIOD OSCILLATIONS

REQUIREMENTS FOR LONGITUDINAL MOTION

If an airplane which has static longitudinal stability is disturbed from a trimmed condition and then allowed to fly for a long period with the controls either fixed in the trim position or free, it will normally perform a motion consisting of two types of oscillations. A short oscillation, which generally damps out within 1 or 2 seconds, occurs immediately after the disturbance. A long-period oscillation then occurs which consists of a gradual increase and decrease of speed about the trim speed with a corresponding variation in the altitude of the airplane. This long-period oscillation, called the phugoid oscillation, has a period given approximately by the formula: period in seconds equals one-quarter times the velocity in miles per hour. The period is, therefore, of the order of a minute for high-speed airplanes in

cruising flight. Because the period is so long, the pilot has no difficulty in controlling the oscillation and causing it to damp out. Tests have shown that the damping of the phugoid oscillation has no correlation with the pilot's opinion of the handling qualities and, therefore, no requirements are specified for its damping. In many actual airplanes this oscillation is unstable.

If the controls are held fixed following a disturbance, the short-period oscillation always damps out so rapidly that it is difficult to detect. With the controls free the short-period oscillation generally damps out very rapidly, but in some cases the pitching motion of the airplane may be coupled with the oscillations of the elevator to cause a violent unstable oscillation. The period of this oscillation varies inversely as the speed and is generally about 1 second in high-speed flight. If the oscillation does not damp out, it may cause large accelerations approaching the structural strength of the airplane after 1 or 2 cycles. Such an oscillation cannot be tolerated and the requirement is therefore made that this oscillation should damp out so that the motion of the elevator and the airplane has completely disappeared in less than 1 cycle.

INFLUENCE OF DESIGN FACTORS ON SHORT-PERIOD LONGITUDINAL OSCILLATIONS

Reference 33 shows that theoretically an airplane with a positive value of C_{h_δ} of the elevator is likely to experience unstable, short-period longitudinal oscillations. An airplane having a positive value of C_{h_δ} will be statically unstable with stick free unless the value of C_{h_α} is sufficiently positive. If a positive value of C_{h_α} is used in combination with a positive value of C_{h_δ} to provide stick-free static stability, unstable short-period oscillations are likely to result. For this reason a fairly accurate rule to follow in connection with the design of aerodynamic balance for the elevator is that C_{h_δ} should always be negative. The tendency for short-period longitudinal oscillations to become unstable is greater at high altitude and with a bobweight in the control system. Theoretical analysis and flight tests have shown that a continuous short-period oscillation may exist under these conditions unless the value of C_{h_δ} is sufficiently negative.

REQUIREMENTS FOR LATERAL MOTION

When an airplane is disturbed laterally from a trimmed condition and the controls are left free for a long period or held fixed in their trimmed positions, the airplane will generally perform a short-period oscillation and will eventually go into a spiral dive. The divergence into the spiral dive, known as spiral instability, is very slow and, like the phugoid oscillation, has no correlation with the pilot's opinion of the handling characteristics. For this reason there are no requirements for spiral stability. Almost all actual airplanes are spirally unstable. Two types of lateral oscillation which are difficult to distinguish from each other may occur. These are known as Dutch roll and snaking. The requirement is made that these oscillations should damp to one-half amplitude in less than 2 cycles.

INFLUENCE OF DESIGN FACTORS ON LATERAL OSCILLATIONS

Dutch roll oscillations may occur with the controls either fixed or free. The period of this type of oscillation on conventional airplanes varies inversely as the speed and generally varies from approximately 6 seconds near the stalling speed to about 2 seconds near the maximum speed. This oscillation is a combined yawing and rolling oscillation that is generally well damped for normal values of directional stability and dihedral. With normal values of directional stability an effective dihedral of approximately 15° would be required to cause instability of the Dutch roll oscillations. On airplanes with a large amount of weight in the fuselage, the inclination of the fuselage to the flight path has an important effect on the stability of the oscillations. A positive angle of attack of the fuselage has a stabilizing effect. (See reference 34.) The tendency for this oscillation is increased on airplanes with high wing loading flying at high altitude and the requirement for damping of the oscillation may set an upper limit on the allowable dihedral angle for heavily loaded airplanes intended to fly at very high altitude.

The type of oscillation called snaking is a constant-amplitude motion that can occur only with the rudder free. It is caused by the use of a rudder that tends to float against the relative wind in conjunction with friction in the rudder control system. If the airplane is disturbed from a trimmed condition, the rudder will tend to float in a direction to oppose any sideslip that is introduced. The friction in the rudder control system will then hold the rudder as the airplane swings back through the trimmed position. The rudder, therefore, tends to feed energy into the oscillation and a constant-amplitude oscillation is built up. This sequence of events is illustrated in figure 43. The period of the oscillation varies inversely as the speed, and the amplitude is proportional to the friction in the rudder system. A theoretical analysis of this type of oscillation is given in

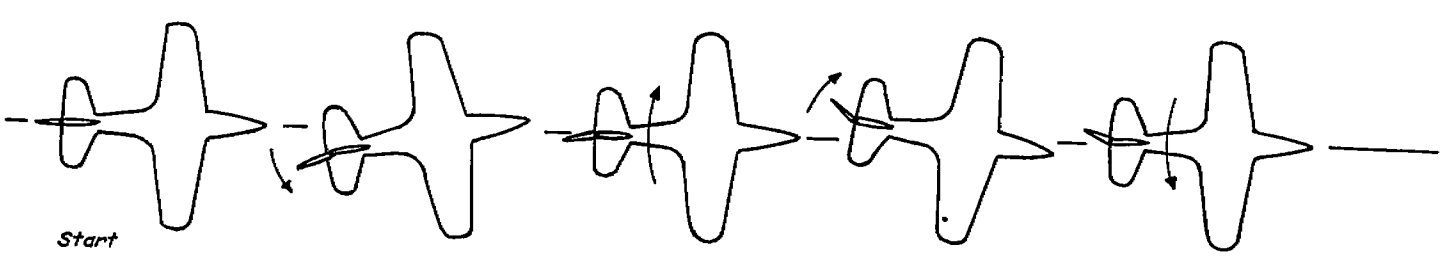

FIGURE 43.—Illustration of rudder and airplane motion during a snaking oscillation.

reference 35. Because the motion of the airplane in this type of oscillation is very similar to that in a Dutch roll, it is difficult to distinguish the two types of motion. In some cases the pilot may hold the rudder pedals fixed but the flexibility in the rudder control system will allow the rudder to move slightly and maintain an oscillation of constant amplitude. Nearly all cases of small-amplitude yawing oscillations which have been reported on numerous airplanes have been cases of snaking rather than Dutch roll. A good rule to use in connection with the design or rudder balance is that the value of C_{h_α} should always be negative so as to avoid the possibility of snaking oscillations. Theoretically, a small positive value of C_{h_α} may be used without causing oscillations provided C_{h_δ} has a sufficiently large negative value.

RELATION BETWEEN RUDDER, AILERON, AND ELEVATOR SHORT-PERIOD OSCILLATIONS

The rudder snaking oscillation discussed previously is the most frequent type of short-period oscillation caused by motion of a control surface. Short-period longitudinal oscillations with the elevator free are less likely to occur, and the range of hinge-moment parameters that can be used is less restricted by the requirements for stability of the oscillations. Short-period aileron oscillations can also occur but these oscillations are more difficult to obtain than those of the elevator. It has been shown theoretically that unstable oscillations of the ailerons can occur only when C_{h_δ} and C_{h_α} have appreciable positive values. Short-period oscillations of the ailerons have been observed in cases for which the controls were overbalanced for small deflections because of nonlinear hinge-moment characteristics. Overbalance of either the elevator or rudder controls at small deflections would be even more likely to cause short-period oscillations of these controls in addition to probably causing static instability with controls free. The short-period oscillations discussed herein are quite distinct from flutter in that they do not involve much deformation of the airplane structure. Usually the oscillations caused by flutter have much shorter periods than the oscillation discussed in this section.

WIND-TUNNEL TESTS AND CALCULATION PROCEDURES FOR DETERMINATION OF FLYING QUALITIES

INTRODUCTION

For many years wind-tunnel tests were ordinarily made of models without propellers. Sometimes empirical methods were used to allow for the effects of power on stability; for example, a criterion that required that the slope of the curve of pitching moment against lift coefficient should lie within certain specified limits. Such a procedure was shown to be unsatisfactory when quantitative flight-test data became available. Tests of powered models are now ordinarily made and it has been shown that the stability of an airplane may be correctly predicted from these tests. The procedures for making such tests are discussed in reference 36.

SIMULATION OF POWER CONDITIONS

CRITERIONS OF SIMILITUDE

Since the effects of power result from the action of the propeller forces and slipstream effects of the airplane, these factors must be simulated as closely as possible in the model tests. If the slipstream velocities are correctly reproduced in relation to the free-stream velocities, the forces of the propeller will also be reproduced, since they are equal to the changes in momentum of the air in the slipstream. The slipstream consists of a mass of air to which is imparted an increase of axial velocity, a rotational velocity, and a vertical or lateral velocity. Propeller theory indicates that the axial velocity is a function of the thrust coefficient, the rotational velocity is a function of the torque coefficient, and the vertical velocity is a function of the normal-force coefficient. Because the relation between the thrust coefficient and the torque coefficient is a function of the propeller efficiency, a propeller on the model would have to have the same efficiency as that on the airplane in order to simulate correctly all the propeller effects. Generally, the efficiency of the model propeller is somewhat less than that of the airplane propeller because of its smaller scale. Therefore, exact simulation of both the thrust and torque coefficients may not be possible in longitudinal-stability tests. However, the thrust coefficient is the most important parameter and should be exactly reproduced. The vertical-force coefficient may generally be reproduced with sufficient accuracy by using a propeller geometrically similar to the full-scale propeller.

VARIATION OF THRUST IN FLIGHT

The definition of propeller efficiency is given by the following equation:

$$\eta=\frac{TV}{550P}$$

Hence, the thrust is given as a function of speed by the equation

$$T=\frac{550P\eta}{V} \tag{47}$$

Ordinarily with constant-speed propellers, the horsepower remains approximately constant, and the propeller efficiency does not vary greatly throughout the speed range. The thrust, therefore, varies approximately inversely as the speed.

In order to test a powered model, the variation of thrust coefficient with lift coefficient must be known. The thrust coefficient based on wing area is usually employed in order that it should be directly comparable with the drag coefficient. From the preceding formula, the thrust coefficient based on wing area may be obtained as follows:

$$\begin{aligned} T_c'&=\frac{T}{qS}\\ &=\frac{550\eta P}{\frac{\rho}{2}V^3S} \end{aligned} \tag{48}$$

The speed may be expressed in terms of the lift coefficient by the formula

$$V=\sqrt{\frac{2\frac{W}{S}}{\rho C_L}} \tag{49}$$

Hence, the equation for the thrust coefficient becomes

$$T_c'=\frac{389\eta P\rho^{1/2}C_L^{3/2}}{W\left(\frac{W}{S}\right)^{1/2}} \tag{50}$$

This formula shows that the thrust coefficient increases approximately as the three-halves power of the lift coefficient. The effects of power on stability are usually greatest where the thrust coefficient and hence the axial velocity of the slipstream are greatest. Formula (50) indicates that these effects will be most marked at high lift coefficients or low speeds. The effects will also be greater at sea level than at high altitudes.

CALCULATION OF THE VARIATION OF THRUST COEFFICIENT WITH LIFT COEFFICIENT FOR A SPECIFIC AIRPLANE

For most investigations of specific models in a wind tunnel, the manufacturer will furnish a chart showing the variation of thrust coefficient with lift coefficient for several constant-power conditions. When such information is not supplied, however, this variation may be calculated by the following method. The use of a constant-speed propeller is assumed. Constant engine power is assumed because, in calculating the stability of an airplane, it is desired to determine the forces and moments that result when the trim speed or angle of attack is changed and the throttle setting is maintained constant.

The following factors are known: engine brake horsepower, propeller speed, propeller diameter, airplane weight, and wing area. The procedure may be outlined as follows:

(1) For several values of lift coefficient compute the speed from the relation

$$V=\sqrt{\frac{2\frac{W}{S}\cos\theta}{\rho C_L}} \tag{51}$$

For the first approximation, the angle of climb θ may be assumed to be zero.

(2) Compute the advance ratio for level flight $\left(\frac{V}{nD}\right)_{LF}$ for each value of lift coefficient.

(3) Calculate the power coefficient, $C_P=\frac{550P}{\rho n^3D^5}$.

(4) From propeller charts applicable to the propeller under consideration, determine C_T, β, and η for each of the values of $\left(\frac{V}{nD}\right)_{LF}$ and C_P. These charts are frequently presented in the form shown in figure 44. Examples of these charts may be found in reference 37.

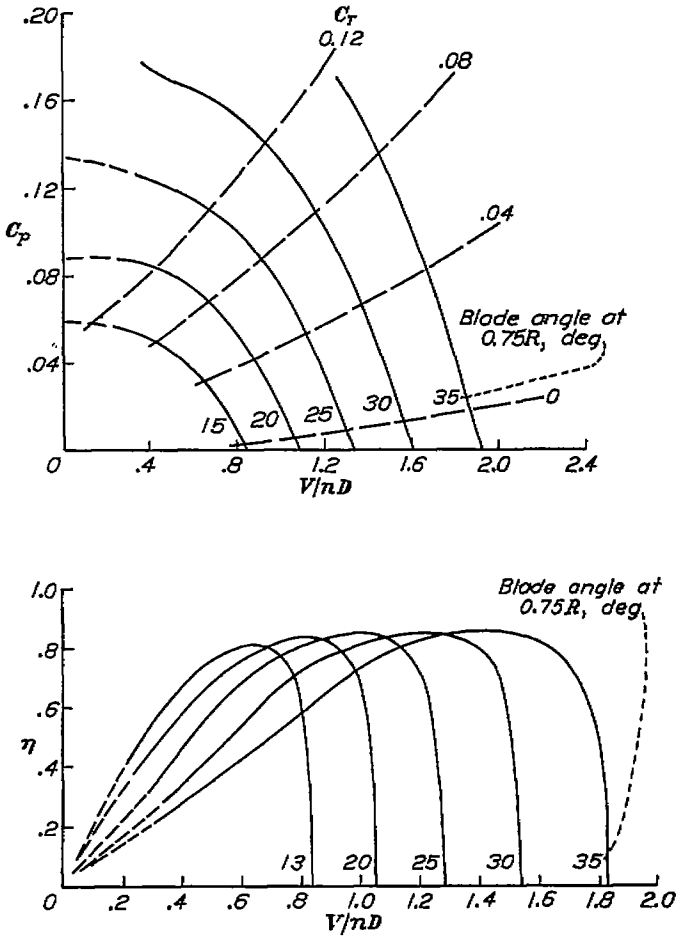

FIGURE 44.—Typical charts showing propeller characteristics.

(5) Compute the thrust coefficient based on wing area

$$T_c'=\frac{T}{qS}=\frac{C_T}{\left(\frac{V}{nD}\right)_{LF}^2}\frac{2D^2}{S} \tag{52}$$

(6) The angle of climb may now be computed from the equilibrium relation which applies in a steady climb or dive. This formula may be derived by considering the forces acting on the airplane as shown in figure 45. Equating the forces in the direction of flight gives the formula

$$T-D=W\sin\theta$$

$$W=\frac{L}{\cos\theta}$$

$$T-D=L\tan\theta$$

hence

$$\tan\theta=\frac{T-D}{L}$$

$$=\frac{T_c'-C_D}{C_L} \tag{53}$$

The drag coefficient for use in calculation may be estimated or measured on the model with the propeller removed.

(7) To correct the data for the angle of climb, recompute

$$\frac{V}{nD}=\left(\frac{V}{nD}\right)_{LF}\sqrt{\cos\theta}$$

and obtain new values of C_T, β, and η for the corrected values of $\frac{V}{nD}$.

(8) The thrust coefficient may be corrected more simply by use of the equation

$$T_c'=\frac{T_{c\,LF}'}{\cos\theta}$$

(9) The torque coefficient may be obtained from the formula.

$$Q_c=\frac{T_c'}{\eta}\left(\frac{V}{nD}\right)\frac{1}{2\pi}\left(\frac{S}{2D^2}\right) \tag{54}$$

SELECTION OF MODEL PROPELLER BLADE ANGLE

In the full-scale airplane the propeller blade angle changes with flight velocity for constant-speed operation. It is desirable to select a blade angle for the model propeller which will simulate as closely as possible the efficiency and normal-force characteristics of the actual airplane propeller. The model propeller may be calibrated by making measurements at various propeller speeds with the model held at 0° angle of attack. The drag of the model with propeller removed at the same angle of attack C_{D_R} is also obtained. The thrust coefficients may be computed from the formula

$$T_c'=C_D-C_{D_R}$$

and the torque coefficient may be obtained from the measurements of the power input to the model motor. From plots of torque coefficient against thrust coefficient for each of the blade angles tested, the blade angle which most closely simulates the full-scale propeller may be selected.

PREPARATION OF OPERATING CHARTS

The procedure of the previous section has resulted in two charts: the variation of thrust coefficient with lift coefficient for the airplane and the variation of thrust coefficient with rotational speed for the model propeller at the selected blade angle. These charts may be combined to give the variation of propeller rotational speed with lift coefficient. In order to determine the variation of propeller rotational speed with angle of attack, the variation of lift coefficient with angle of attack must be determined with the correct variation of thrust coefficient and also with the correct stabilizer setting variation to keep the model in trim. A sufficiently accurate curve may be obtained from the tests with two stabilizer settings. The results of these tests may be applied as shown in figure 46. At given propeller rotational speeds the angle of attack is selected to give the correct lift coefficient for a given power condition for the two stabilizer settings used. A chart showing the variation of propeller rotational speed

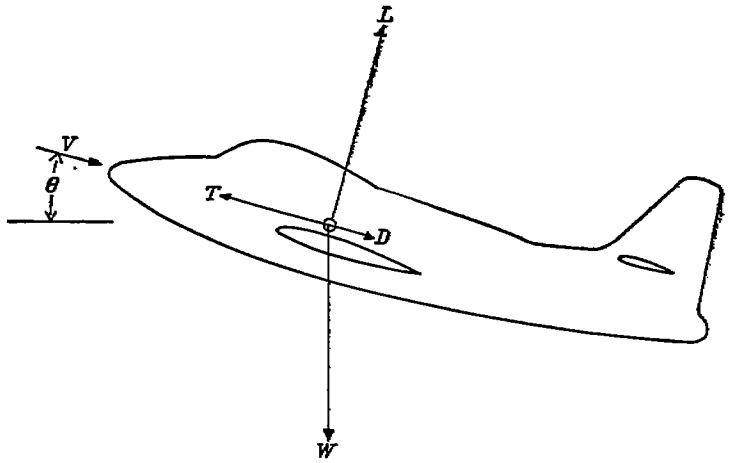

FIGURE 45.—Forces acting on an airplane in a steady climb.

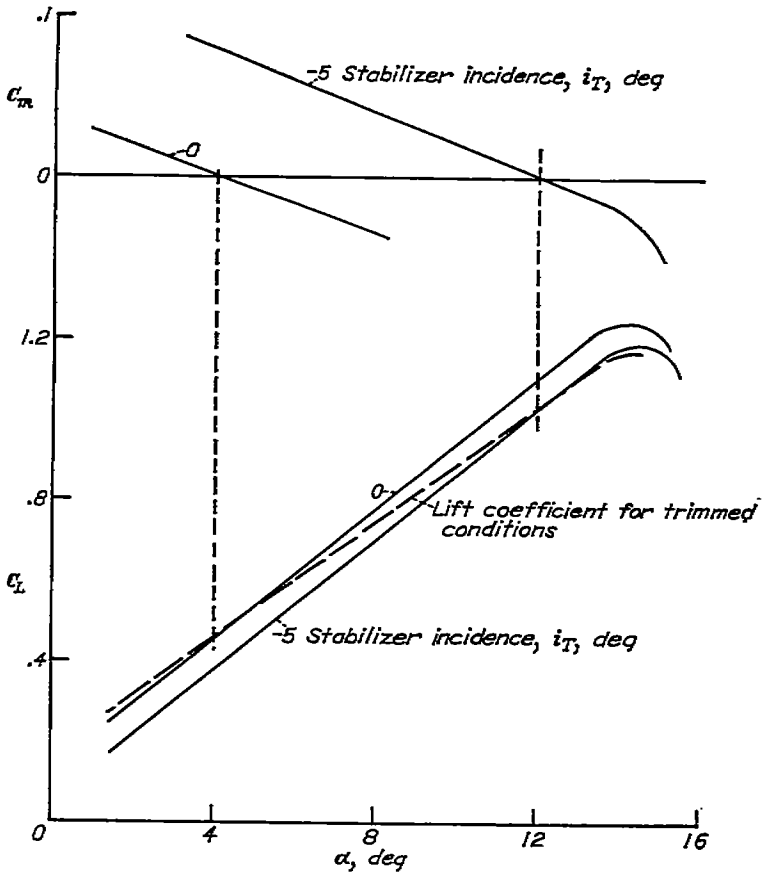

FIGURE 46.—Method of determining approximate variation of lift coefficient for trimmed conditions with angle of attack for preparation of propeller operating charts.

with angle of attack must be prepared for each power condition and flap condition to be tested. The curve of lift coefficient against angle of attack for trimmed conditions must be used in preparing this chart.

SIMULATION OF PROPELLER-IDLING CONDITION

A windmilling propeller on a wind-tunnel model will usually give a fairly accurate representation of an idling propeller on the actual airplane provided there is no undue amount of

friction in the model propeller drive. In order to obtain the maximum accuracy in simulating a propeller with engine idling, test data for the variation of engine torque with speed on the actual airplane must be used.

WIND-TUNNEL TESTS FOR LANDING AND TAKE-OFF CHARACTERISTICS

WIND-TUNNEL TESTS EMPLOYING A GROUND BOARD

Tests to determine elevator control near the ground are usually made by installing a ground board in the tunnel with just sufficient clearance between it and the model landing gear to permit a reasonable variation in angle of attack. The tests are made with the model in the landing configuration—that is, flaps down, landing gear down, propeller windmilling, and stabilizer set to the value used on the airplane for this condition. The model is run through the angle-of-attack range with a series of elevator settings. The pitching moment is plotted against angle of attack for each elevator setting. A cross plot is then made of elevator deflection for trim against angle of attack. Because of scale effect, the model angle of stall and maximum lift coefficient will be lower than those of the airplane. Consequently, the model usually stalls before it reaches the angle of attack corresponding to the three-point attitude. The curve of elevator angle against angle of attack must, therefore, be extrapolated to this point in order to determine the elevator deflection required.

SIMULATION OF POWER FOR TAKE-OFF CONDITION

The variation of thrust with speed and thrust coefficient with speed have been discussed previously. On the ground, as in the air, the thrust coefficient is determined by the velocity. In the air there is a definite relation between velocity and the lift coefficient and therefore between the thrust coefficient and the lift coefficient. On the ground there is no relation between the thrust coefficient and the lift coefficient. The airplane may be moving with a given velocity at almost any lift coefficient. In wind-tunnel tests the model propeller operating conditions may be determined by procedures similar to those given for the normal flight range. The calibrations must extend to very large values of thrust coefficient since these values are encountered at the airplane velocities below take-off speed. It will probably be necessary to reduce the tunnel speed considerably in order to obtain the required values of the thrust coefficient.

WIND-TUNNEL TEST PROCEDURE FOR TAKE-OFF CONDITION

The take-off condition requires large control moments from the elevator because of the ground-reaction moments. The requirement amounts to specifying that the elevator give sufficient aerodynamic moment to counteract the ground-reaction moments. It is desirable to refer all the moments to the center of gravity, since the airplane in take-off is accelerating. A summation of moments about any other point would require that the inertia effects be considered.

The model is tested in the presence of a ground board at 0° angle of attack with the thrust coefficient varied through a suitable range. For a tricycle landing gear the maximum up-elevator deflection and the most forward center-of-gravity location are used, and for conventional landing gear the maximum down-elevator deflection and most rearward center-of-gravity location are used. Curves of aerodynamic pitching moment available and moment required to balance ground-reaction effect can then be plotted against the thrust coefficient or velocity. At 0.8 take-off speed, the summation of the two should be positive for the tricycle-landing-gear case; and at 0.5 take-off speed, it should be negative for the conventional-landing-gear case.

COMPUTATION OF GROUND-REACTION MOMENTS

Tricycle landing gear.—In figure 47(a), the forces acting on an airplane with a tricycle landing gear during the take-off run are shown. The ground-reaction moment is given by the formula

$$M_g=-F_rh-Rd$$

or since $R=W-L$ and $F_r=(W-L)f$

$$\begin{aligned} M_g&=-(W-L)fh-(W-L)d\\ &=-Wfh+Lfh-Wd+Ld\\ &=-Wfh+C_LqSfh-Wd+C_LqSd \end{aligned} \tag{55}$$

The corresponding moment coefficient is given by the formula

$$\begin{aligned} C_{m_g}&=\frac{M_g}{qSc}\\ &=\frac{-Wfh}{qSc}+\frac{C_LqSfh}{qSc}-\frac{Wd}{qSc}+\frac{C_LqSd}{qSc}\\ &=\frac{-W}{qS}\left(\frac{fh}{c}+\frac{d}{c}\right)+C_L\left(\frac{fh}{c}+\frac{d}{c}\right)\\ &=\left(C_L-\frac{W}{qS}\right)\left(\frac{fh}{c}+\frac{d}{c}\right) \end{aligned} \tag{56}$$

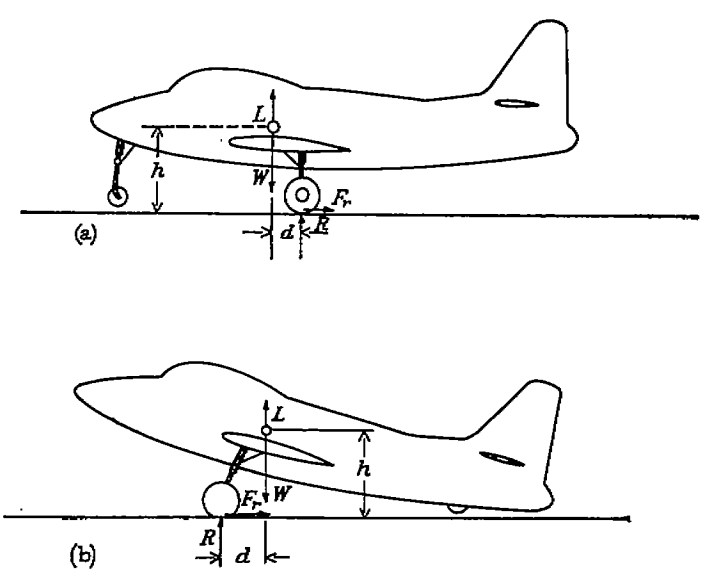

(a) Tricycle landing gear.
(b) Conventional landing gear.

FIGURE 47.—Calculation of ground reaction moments.

From the wind-tunnel measurements, the speed at which the aerodynamic moment is sufficient to balance the ground reaction may be determined.

Conventional landing gear.—In figure 47(b) the forces acting on an airplane with a conventional landing gear during the take-off run are shown. The equation for the ground-reaction moment coefficient may be derived in the same manner as before to give

$$C_{m_g}=\left(C_L-\frac{W}{qS}\right)\left(\frac{fh}{c}-\frac{d}{c}\right) \tag{57}$$

DETERMINATION OF NEUTRAL POINTS

STICK-FIXED NEUTRAL POINT

The stick-fixed neutral point may be determined from the measured variation of pitching-moment coefficient with lift coefficient determined with two or more stabilizer (or elevator) settings. One way to determine the neutral point would be to recompute the pitching moments about several center-of-gravity positions from the wind-tunnel balance readings. With sufficiently extensive calculations, the neutral points could be found as the center-of-gravity locations for which $C_m=0$ and $\frac{dC_m}{d\alpha}=0$.

A simpler procedure, given in reference 38, will now be described. Assume that the wind-tunnel results are presented as lift and pitching moment about some particular point (1) on the model. As shown by figure 48, the moment about another point (n) is given by

$$M_n=Lx_n+M_1 \tag{58}$$

Converting to coefficient form:

$$C_{m_n}qSc=C_LqSx_n+C_{m_1}qSc \tag{59}$$

$$C_{m_n}=C_L\frac{x_n}{c}+C_{m_1} \tag{60}$$

also

$$\frac{dC_{m_n}}{dC_L}=\frac{x_n}{c}+\frac{dC_{m_1}}{dC_L} \tag{61}$$

If point (n) is the neutral point, $C_{m_n}=0$ and $\frac{dC_{m_n}}{dC_L}=0$. Hence, from equation (60)

$$\frac{C_{m_1}}{C_L}=-\frac{x_n}{c} \tag{62}$$

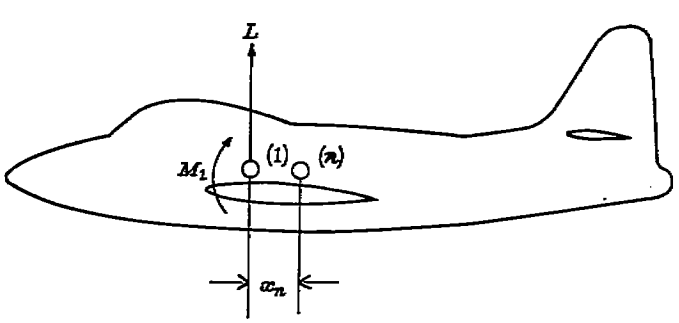

FIGURE 48.—Diagram illustrating calculation of moments about point (n) when forces and moments about point (1) are given

and from equation (61)

$$\frac{dC_{m_1}}{dC_L}=-\frac{x_n}{c} \tag{63}$$

In order to find the stick-fixed neutral point, a point on the curves of C_{m_1} against C_L where $\frac{C_{m_1}}{C_L}=\frac{dC_{m_1}}{dC_L}$ must be found. The distance between the neutral point and point (1), the pitching-moment reference point, is then equal to either $-\frac{C_{m_1}}{C_L}$ or $-\frac{dC_{m_1}}{dC_L}$.

A graphical method based on the above relationship that may be used to determine the stick-fixed neutral point is shown in figure 49. At a lift coefficient of 1.0, the following relation exists:

$$\begin{aligned}\frac{dC_m}{dC_L}&=\frac{C_m}{C_L}\\&=-\frac{x_n}{c}\\&=-0.05\end{aligned}$$

Hence, the neutral point is at 0.25+0.05=0.30 or 30 percent mean aerodynamic chord. At a lift coefficient of 0.6, the following relation exists:

$$\begin{aligned}\frac{dC_m}{dC_L}&=\frac{C_m}{C_L}\\&=-\frac{x_n}{c}\\&=-0.10\end{aligned}$$

Hence, the neutral point is at 0.25+0.10=0.35 or 35 percent mean aerodynamic chord at $C_L=0.6$.

At other lift coefficients, the results obtained from the tests at two stabilizer settings must be interpolated or extrapolated. For example, at a lift coefficient of 0.3, the values of $\frac{dC_m}{dC_L}$ and $\frac{C_m}{C_L}$ obtained from the measured results of figure 49 may be plotted as shown in figure 50(a).

The neutral point is found from the relation

$$\frac{dC_m}{dC_L}=\frac{C_m}{C_L}=-0.204$$

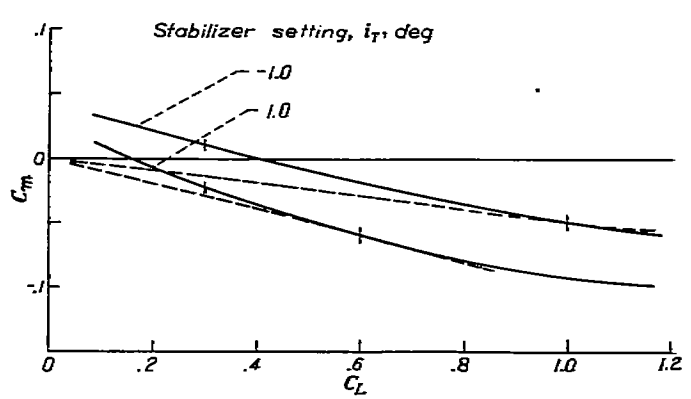

FIGURE 49.—Wind-tunnel test data for determination of the stick-fixed neutral point. Neutral points determined directly at C_L=1.0 and 0.6. Data for center of gravity at 25 percent M.A.C.

Hence, the neutral point is at 0.25+0.204=0.454 or 45.4 percent mean aerodynamic chord.

Another graphical construction, known as the method of tangents, is illustrated in figure 50(b) for the same data that were plotted in figure 49. At a lift coefficient of 0.3, the neutral point is given by the slope of the line from the origin to the intersection of tangents to the pitching-moment curves at $C_L=0.3$. This slope is

$$\frac{C_m}{C_L}=-\frac{x_n}{c}=-0.204$$

Hence, the neutral point is at 0.25+0.204=0.454, which agrees with the value obtained by the previous method.

The pitching-moment curves presented in these examples are idealized. In practice, experimental scatter of the data will make difficult exact determination of the slopes of the curves. In order to reduce errors in determining the neutral points, it is desirable to obtain data for three stabilizer settings with rather large increments of deflection.

STICK-FREE NEUTRAL POINT

The stick-free neutral points may be determined from wind-tunnel tests in which the pitching moments and elevator hinge moments are measured with at least two stabilizer settings and two elevator settings, and the pitching moments are also measured with tail off. A graphical procedure similar to that for the stick-fixed neutral points may be used. This procedure is described in reference 39. Alternatively, the model may be tested with a free, mass-balanced elevator and the same procedure as was used for calculating the stick-fixed neutral point may be employed.

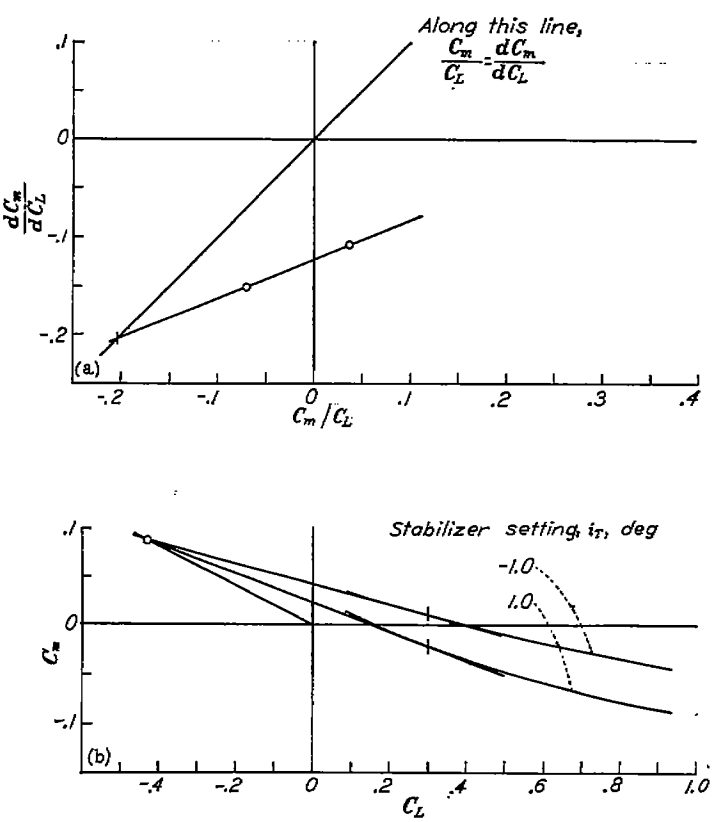

(a) Method of extrapolation of slopes.
(b) Method of tangents.

FIGURE 50.—Graphical procedures for determination of stick-fixed neutral point from wind-tunnel tests.

CONCLUDING REMARKS CONCERNING SELECTION OF AIRPLANE CONFIGURATION TO SATISFY THE FLYING-QUALITIES REQUIREMENTS

The various design factors which may be employed to obtain satisfactory handling qualities have been discussed in connection with the various requirements. Many of these design conditions are of a conflicting nature so that compromises in the design will generally have to be made in order to meet all the requirements as closely as possible. A few typical examples of the conflicting requirements are given as illustrations. The use of a slightly sweptback wing to improve the dihedral effect in low-speed climbing flight may cause unsatisfactory stalling characteristics. The use of a closely balanced elevator to provide desirable stick-force gradients in steady maneuvers over a large center-of-gravity range may result in undesirably light control forces in rapid maneuvers. The use of a positive value of C_{h_α} on the rudder to improve the directional stability with rudder free will probably result in unsatisfactory snaking oscillations. Offsetting the fin to provide sufficient directional control for trim at low speeds with power on may cause undesirably large variations in rudder force with speed in high-speed dives. Increasing the chord of any control surface to provide additional control power will make the problem of balancing the control surface to obtain sufficiently light stick forces more difficult. Many other similar examples may be found by studying the handling-qualities requirements in detail.

In spite of the conflicting nature of many of the design requirements, several airplanes have been built which meet almost all the handling-qualities requirements without appreciably sacrificing performance characteristics. Desirable handling qualities in these cases have been attained by considering the stability and control characteristics in the early stages of the design and arranging such basic design factors as the horizontal and vertical tail areas and locations, wing plan form, and center-of-gravity location in such a way that the handling-qualities requirements may be more easily satisfied.

The ability of an airplane to meet many of the handling-qualities requirements may be estimated quite accurately simply from the dimensions of the airplane. Methods of making these estimations have not been discussed in detail in the present report but they may be found in the various NACA papers given as references. Some factors which cannot be accurately estimated from the airplane dimensions at the present time are the effects of power on longitudinal and directional stability. Wind-tunnel tests of a complete model are desirable in estimating these effects. The methods of calculating the flying qualities of an airplane from wind-tunnel tests are described more fully in references 40 and 41. In order to make a complete evaluation of the handling qualities of a proposed airplane, the effects of compressibility should be determined by means of tests of a complete model in a high-speed tunnel, and the hinge moments of the control surfaces should be measured by means of tests of large-scale or full-size models.

LANGLEY MEMORIAL AERONAUTICAL LABORATORY,
NATIONAL ADVISORY COMMITTEE FOR AERONAUTICS,
LANGLEY FIELD, VA., *April 12, 1948.*

APPENDIX

SYMBOLS

a_r	radial acceleration, ft/sec^2
b	span of wing, unless subscript is used to indicate otherwise
b'	distance from longitudinal axis to a point on aileron
C_D	drag coefficient (D/qS)
C_{D_R}	drag coefficient of airplane with propeller removed
C_h	elevator hinge-moment coefficient $(H/qb_ec_e^2)$
C_{h_0}	elevator hinge-moment coefficient when $\alpha_T=0°$ and $\delta=0°$
C_{h_α}	variation of control-surface hinge-moment coefficient with angle of attack $\left(\frac{\partial C_h}{\partial \alpha}\right)$
C_{h_δ}	variation of control-surface hinge-moment coefficient with deflection $\left(\frac{\partial C_h}{\partial \delta}\right)$
C_L	lift coefficient (L/qS)
C_l	rolling-moment coefficient (L/qSb)
C_{l_p}	damping-moment coefficient in roll $\left(\frac{dC_l}{d\left(\frac{pb}{2V}\right)}\right)$
C_{l_δ}	variation of rolling-moment coefficient with aileron deflection $\left(\frac{dC_l}{d\delta}\right)$
C_m	pitching-moment coefficient (M/qSc)
C_{m_0}	pitching-moment coefficient at zero lift (M_0/qSc)
C_N	normal-force coefficient $\left(\frac{\text{Normal force}}{qS}\right)$
C_n	yawing-moment coefficient (N/qbS)
C_P	propeller power coefficient $(P/\rho n^3D^5)$
C_T	propeller thrust coefficient $(T/\rho n^2D^4)$
C_Y	side-force coefficient (Y/qS)
c	wing mean aerodynamic chord, with subscripts indicates root-mean-square chord of indicated surface
D	drag, or propeller diameter
d	horizontal distance between center of gravity and wheel hub
F	stick force
F_r	friction force
f	coefficient of friction
g	acceleration due to gravity (32.2 ft/sec^2)
H	hinge moment
h	vertical distance between center of gravity and ground when airplane is on the ground
i_T	incidence of stabilizer
K	ratio between elevator stick force and elevator hinge moment
L	lift, or rolling moment
L_p	damping moment in roll
l	tail length measured from the center of gravity to quarter-chord point of tail
M	pitching moment
M_0	pitching moment at zero lift
m	mass of airplane
N	yawing moment
n	propeller speed, rps; or normal acceleration in g
P	shaft horsepower
p	rolling velocity
Q_c	propeller torque disk-loading coefficient $\left(\frac{\text{Propeller torque}}{\rho V^2D^3}\right)$
q	dynamic pressure $\left(\frac{1}{2}\rho V^2\right)$
R	ground reaction, or radius of curvature of flight path
S	wing area
T	propeller thrust
T_c	propeller thrust disk-loading coefficient $(T/\rho V^2D^2)$
T_c'	propeller thrust coefficient based on wing area $\left(\frac{T}{qS} \text{ or } T_c\frac{2D^2}{S}\right)$
V	true airspeed
W	weight of airplane
w	vertical velocity of flow at tail
X_s	stick movement
x	distance from center of gravity to neutral point
x'	distance from center of gravity to aerodynamic center of wing-fuselage combination
x_0	distance from aerodynamic center of wing-fuselage combination to neutral point
Y	side force
α	angle of attack
β	propeller blade angle, or angle of sideslip
Δ	change in a quantity
δ	control surface deflection
δ_{e_0}	elevator deflection required for trim when $C_L=0$
ϵ	downwash angle
η	propeller efficiency
θ	angle of climb
μ	airplane relative-density coefficient $(m/\rho Sl)$

ρ air density

$\tau=\dfrac{\dfrac{\partial C_L}{\partial \delta}}{\dfrac{\partial C_L}{\partial \alpha}}$ control-surface effectiveness factor

σ sidewash angle

ϕ angle of bank, or trailing-edge angle of airfoil

Subscripts:

a aileron

b balance

e elevator

f flap

g due to presence of ground

LF level flight

n point n

t tab

T tail

w wing

REFERENCES

1. Phillips, W. H., Williams, W. C., and Hoover, H. H.: Measurements of the Flying Qualities of a Curtiss SB2C-1 Airplane (No. 00014). NACA MR, March 14, 1944.
2. Gilruth, R. R.: Requirements for Satisfactory Flying Qualities of Airplanes. NACA Rep. 755, 1943.
3. Anon.: Stability and Control Characteristics of Airplanes. AAF Specification No. R-1815-A, April 7, 1945.
4. Anon.: Specification for Stability and Control Characteristics of Airplanes. SR-119A, Bur. Aero., April 7, 1945.
5. Gilruth, R. R., and White, M. D.: Analysis and Prediction of Longitudinal Stability of Airplanes. NACA Rep. 711, 1941.
6. White, Maurice D.: Estimation of Stick-Fixed Neutral Points of Airplanes. NACA CB L5C01, 1945.
7. Soulé, Hartley A.: Flight Measurements of the Dynamic Longitudinal Stability of Several Airplanes and a Correlation of the Measurements with Pilots' Observations of Handling Characteristics. NACA Rep. 578, 1936.
8. Phillips, William H.: A Flight Investigation of Short-Period Longitudinal Oscillations of an Airplane with Free Elevator. NACA ARR, May 1942.
9. Ribner, Herbert S.: Notes on the Propeller and Slipstream in Relation to Stability. NACA ARR L4I12a, 1944.
10. Goett, Harry J., and Delany, Noel K.: Effect of Tilt of the Propeller Axis on the Longitudinal-Stability Characteristics of Single-Engine Airplanes. NACA Rep. 774, 1944.
11. Sweberg, Harold H.: The Effect of Propeller Operation on the Air Flow in the Region of the Tail Plane for a Twin-Engine Tractor Monoplane. NACA ARR, Aug. 1942.
12. Ribner, Herbert S.: Field of Flow about a Jet and Effect of Jets on Stability of Jet-Propelled Airplanes. NACA ACR L6C13, 1946.
13. Heaslet, Max. A.: Critical Mach Numbers of Various Airfoil Sections. NACA ACR 4G18, 1944.
14. Jones, Robert T.: Thin Oblique Airfoils at Supersonic Speed. NACA Rep. 851, 1946.
15. Soulé, Hartley A.: Influence of Large Amounts of Wing Sweep on Stability and Control Problems of Aircraft. NACA TN 1088, 1946.
16. Mathews, Charles W.: An Analytical Investigation of the Effects of Elevator-Fabric Distortion on the Longitudinal Stability and Control of an Airplane. NACA ACR L4E30, 1944.
17. Sears, Richard I.: Wind-Tunnel Data on the Aerodynamic Characteristics of Airplane Control Surfaces. NACA ACR 3L08, 1943.
18. Swanson, Robert S., and Crandall, Stewart M.: Lifting-Surface-Theory Aspect-Ratio Corrections to the Lift and Hinge-Moment Parameters for Full-Span Elevators on Horizontal Tail Surfaces. NACA Rep. 911, 1948.
19. Langley Research Department: Summary of Lateral-Control Research. (Compiled by Thomas A. Toll.) NACA Rep. 868, 1947.
20. Lowry, John G.: Résumé of Hinge-Moment Data for Unshielded Horn-Balanced Control Surfaces. NACA RB 3F19, 1943.
21. Sears, Richard I., and Purser, Paul E.: Wind-Tunnel Investigation of Control-Surface Characteristics. XIV—NACA 0009 Airfoil with a 20-Percent-Chord Double Plain Flap. NACA ARR 3F29, 1943.
22. Spearman, M. Leroy: Wind-Tunnel Investigation of Control-Surface Characteristics. XXIII – A 0.25-Airfoil-Chord Flap with Tab Having a Chord Twice the Flap Chord on an NACA 0009 Airfoil. NACA ARR L5G25, 1945.
23. Jones, Robert T., and Kleckner, Harold F.: Theory and Preliminary Flight Tests of an All-Movable Vertical Tail Surface. NACA ARR, Jan. 1943.
24. Phillips, William H.: Application of Spring Tabs to Elevator Controls. NACA Rep. 797, 1944.
25. House, Rufus O., and Wallace, Arthur R.: Wind-Tunnel Investigation of Effect of Interference on Lateral-Stability Characteristics of Four NACA 23012 Wings, an Elliptical and a Circular Fuselage, and Vertical Fins. NACA Rep. 705, 1941.
26. Sears, Richard I., and Hoggard, H. Page, Jr.: Characteristics of Plain and Balanced Elevators on a Typical Pursuit Fuselage at Attitudes Simulating Normal-Flight and Spin Conditions. NACA ARR, March 1942.
27. Pearson, Henry A., and Jones, Robert T.: Theoretical Stability and Control Characteristics of Wings with Various Amounts of Taper and Twist. NACA Rep. 635, 1938.
28. Lefko, William, and Goodman, Alex: Preliminary Wind-Tunnel Investigation at Low Speed of Stability and Control Characteristics of Swept-Back Wings. NACA TN 1046, 1946.
29. Gilruth, R. R., and Turner, W. N.: Lateral Control Required for Satisfactory Flying Qualities Based on Flight Tests of Numerous Airplanes. NACA Rep. 715, 1941.
30. Pearson, H. A.: Theoretical Span Loading and Moments of Tapered Wings Produced by Aileron Deflection. NACA TN 589, 1937.
31. Gilruth, Robert R.: Analysis of Vertical-Tail Loads in Rolling Pull-Out Maneuvers. NACA CB L4H14, 1944.

32. Sweberg, Harold H., and Dingeldein, Richard C.: Summary of Measurements in Langley Full-Scale Tunnel of Maximum Lift Coefficients and Stalling Characteristics of Airplanes. NACA ACR L5C24, 1945.
33. Greenberg, Harry, and Sternfield, Leonard: A Theoretical Investigation of Longitudinal Stability of Airplanes with Free Controls Including Effect of Friction in Control System. NACA Rep. 791, 1944.
34. Sternfield, Leonard: Effect of Product of Inertia on Lateral Stability. NACA TN 1193, 1947.
35. Greenberg, Harry, and Sternfield, Leonard: A Theoretical Investigation of the Lateral Oscillations of an Airplane with Free Rudder with Special Reference to the Effect of Friction. NACA Rep. 762, 1943.
36. Recant, Isidore G., and Swanson, Robert S.: Determination of the Stability and Control Characteristics of Airplanes from Tests of Powered Models. NACA ARR, July 1942.
37. Biermann, David, and Hartman, Edwin P.: Tests of Five Full-Scale Propellers in the Presence of a Radial and a Liquid-Cooled Engine Nacelle, Including Tests of Two Spinners. NACA Rep. 642, 1938.
38. Schuldenfrei, Marvin: Some Notes on the Determination of the Stick-Fixed Neutral Point from Wind-Tunnel Data. NACA RB 3I20, 1943.
39. Schuldenfrei, Marvin: Some Notes on the Determination of the Stick-Free Neutral Point from Wind-Tunnel Data. NACA RB 4B21, 1944.
40. Kayten, Gerald G.: Analysis of Wind-Tunnel Stability and Control Tests in Terms of Flying Qualities of Full-Scale Airplanes. NACA Rep. 825, 1945.
41. Goett, Harry J., Jackson, Roy P., and Belsley, Steven E: Wind Tunnel Procedure for Determination of Critical Stability and Control Characteristics of Airplanes. NACA Rep. 781, 1944.

TABLE I

AIRPLANE CHARACTERISTICS ASSUMED IN CALCULATING STICK FORCES REQUIRED IN MANEUVERS GIVEN IN FIGURE 18

Characteristics assumed to be the same for all example airplanes:	
S_T/S	0.2
$\frac{\partial C_{L_T}}{\partial \delta_e}$, per deg	0.03
l/c	3
$\left(\frac{\partial C_L}{\partial \alpha}\right)_W$, per deg	0.07
$d\delta_e/dX_s$, radian/ft	0.6
Characteristics assumed for individual airplanes:	
Light airplane:	
W/S, lb/sq ft	6
b_e, ft	7
c_e, ft	1.5
Fighter airplane:	
W/S, lb/sq ft	45
b_e, ft	13
c_e, ft	1.5
Bomber:	
W/S, lb/sq ft	45
b_e, ft	35
c_e, ft	3

TABLE II

SUMMARY OF CHARACTERISTICS OF VARIOUS TYPES OF CONTROL-SURFACE BALANCE

Type	Structural considerations	Lift characteristics	Hinge moments beyond the stall (tendency to "lock over")	Remarks
Plain flap 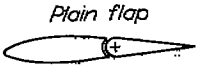	Difficult to mass balance, easy to seal (seal improves effectiveness).	Lift increases linearly with deflection to larger deflections than on the surfaces with overhanging balance. Lift effectiveness of a plain sealed flap may be regarded as a standard to be approached by other types of balances.	Relatively large tendency to float with relative wind.	Values of C_{h_δ} and C_{h_α} too large to give acceptable control forces on most modern airplanes.
Overhanging or inset hinge balance 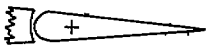	Easy to obtain mass balance, difficult to seal.	Large amounts of overhanging balance may result in separation of the flow over the balance at relatively small deflections causing reduced maximum lift. Maximum lift increment due to flap deflection usually greater without seal.	Very strong tendency to float with the wind when surface is stalled, especially if balance nose projects beyond the contour of the fixed surface.	Characteristics depend on nose shape. Blunt-nose balance has greater effect on hinge moments than sharp-nose balance at small deflections but the opposite may be true at large deflections. Characteristics generally are linear over smaller range than plain flap. Drag increase may be considerable with sharp nose.
Horn balance 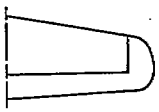	Easy to mass balance but balance weight not evenly distributed along leading edge. Easy to seal hinge gap. Large air loads on horn result in torsion loads in surface.	Same as plain flap	Generally smaller than plain flap.	If horn balance is used to give small values of C_{h_δ}, C_{h_α} will be positive. This characteristic on an elevator may give large trim changes due to flaps and power. On a rudder positive C_{h_α} may cause snaking.
Shielded horn balance 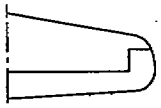	Same as horn balance	Shielded portion similar to overhanging balance, rest similar to plain flap.	Similar to overhanging balance.	Effect on C_{h_α} much less than unshielded horn balance.
Balancing tab 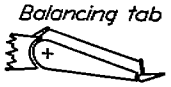	Same as plain surface. Tab linkage must be stiff to avoid flutter.	Variation of lift with deflection and, also, maximum lift increment due to deflection reduced by action of tab.	Tendency to float with relative wind even greater than plain control surface.	Balancing tab may be used in conjunction with other types of balance to adjust the value of C_{h_δ} while leaving C_{h_α} unchanged.
Beveled-trailing-edge balance 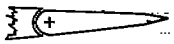	Same as plain flap	Variation of lift with deflection and angle of attack smaller than plain flap but maximum lift increment approximately the same.	Considerably reduced below value for plain flap.	Characteristics likely to be nonlinear unless hinge gap is sealed. Seal does not need to be absolutely airtight.
Sealed internal balance (shrouded balance) 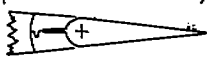	Easy to mass balance. Structurally complicated to install airtight seal. Deflection range may be limited by interference of balance with inside of fixed surface.	Same as plain flap but may be seriously reduced if cover plates are bent outward. Maximum lift increment due to deflection may be reduced if deflection range is limited.	Similar to overhanging balance.	Aerodynamically clean installation gives small drag increment.
All-movable control surface 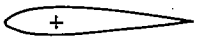	Structure may be complicated by hinge installation. Reduction in total tail area may be possible in some cases.	Maximum lift coefficient of surface may be developed no matter what the angle of attack of the approaching flow.	Relatively large tendency to float with relative wind.	Values of C_{h_α} may be adjusted to any value by varying the hinge location. Value of C_{h_δ} may be adjusted by use of balancing tab (or unbalancing tab).