NACA TN No. 1508

6099

TECH LIBRARY KAFB, NM
0144641

NATIONAL ADVISORY COMMITTEE FOR AERONAUTICS

TECHNICAL NOTE

No. 1508

PROVISIONAL SYMBOLS AND DEFINITIONS FOR AIRCRAFT TURBINES

By NACA Subcommittee on Turbines

Lewis Flight Propulsion Laboratory
Cleveland, Ohio

Washington
March 1949

AFMDC
AFL 2811

TECH LIBRARY KAFB, NM

TECH LIBRARY KAFB, NM
0144641

NATIONAL ADVISORY COMMITTEE FOR AERONAUTICS

TECHNICAL NOTE NO. 1508

PROVISIONAL SYMBOLS AND DEFINITIONS FOR AIRCRAFT TURBINES

By NACA Subcommittee on Turbines

INTRODUCTION

In order to establish uniform and consistent turbine terminology for presenting results of investigations conducted by various laboratories, the NACA Subcommittee on Turbines has prepared a nomenclature with definitions of various turbine parameters and a consistent set of physical constants. A panel appointed by the Subcommittee on Turbines to execute this phase of the standardization program consisted of: Professor C. Richard Soderberg of the Massachusetts Institute of Technology, Chairman; Arnold H. Redding of the Westinghouse Electric Corporation; Professor J. T. Rettaliata of the Illinois Institute of Technology; and Arthur W. Goldstein of the NACA Lewis laboratory.

UNITS

Unless specifically stated, the system of units employed is based on the selection of basic units for length, time, force, and temperature. Physical constants are those of the Third International Conference on Steam Tables (reference 1).

In the English system, these units are foot (ft), second (sec), pound (lb), and degree Fahrenheit (°F). The unit of heat is the British thermal unit (Btu). This system of units is associated with the acceleration due to gravity at sea level $g = 32.17$ feet per second per second and the mechanical equivalent of heat $J = 778.3$ foot-pounds per Btu. The unit of power is the horsepower equivalent to 550 foot-pounds per second or 2544 Btu per hour.

In the metric system, the units are meter (m), second (sec), kilogram (kg), and degree Centigrade (°C). The unit of heat is the kilogram-calorie (kg-cal). This system of units is associated with the acceleration due to gravity at sea level $g = 9.807$ meters per second per second and the mechanical equivalent of heat $J = 427.0$ kilogram-meters per kilogram calorie. The metric horsepower is equivalent to 75 kilogram-meters per second or 542.5 foot-pounds per second.

SYMBOL NOTATION

The following symbols have been adopted by the NACA Subcommittee on Turbines:

Symbol	Concept	Typical units
A	flow area	sq ft
a	velocity of sound	ft/sec
b	blade height or span	ft
C_D	drag coefficient	dimensionless
C_L	lift coefficient	dimensionless
c	blade chord	ft
c_p	specific heat at constant pressure	Btu/(lb)(°F)
c_v	specific heat at constant volume	Btu/(lb)(°F)
c_x	axial projection of chord	ft
D	diameter	ft
D_h	hydraulic (or equivalent) diameter $\left(\frac{4A}{\text{perimeter}}\right)$	ft
d	distance across blade channel at discharge end (fig. 3)	ft
f	fuel-air ratio	lb fuel/lb air
g	acceleration due to gravity, 32.17	ft/sec^2
H	heat-transfer coefficient	Btu/(hr)(sq ft)(°F)
h	specific enthalpy	Btu/lb
J	mechanical equivalent of heat, 778.3 ft-lb/Btu	dimensionless
k	thermal conductivity	Btu/(hr)(sq ft)(°F/ft)
k or γ	ratio of specific heats (c_p/c_v)	dimensionless
L	lift of blade	lb
L	lift of blade per unit span	lb/ft

1010

Symbol	Concept	Typical units
l	length or perimeter	ft
M	Mach number	dimensionless
N	rotational speed (alternative symbol)	rpm or rps
n	rotational speed (preferred symbol)	rpm or rps
n	exponent of polytropic expansion or compression	dimensionless
P	power	hp
p	absolute pressure	lb/sq ft
Q or Q'	heat flow per unit time	Btu/sec
q	quantity of heat per unit mass (or weight)	Btu/lb
R	gas constant	ft-lb/(lb)(°F)
R or r	radius	ft
R or Re	Reynolds number	dimensionless
S	surface area	sq ft
s	blade pitch or spacing (fig. 3)	ft
s	specific entropy	Btu/(lb)(°R)
T	absolute temperature (459.7° + °F)	°R
t	time	sec
U	blade velocity	ft/sec
u	specific internal energy	Btu/lb
V	absolute velocity of gas	ft/sec
v	specific volume	cu ft/lb
W	relative velocity of gas	ft/sec
w	weight flow rate of gas (w/g mass flow)	lb/sec
Z	number of blades, rows, or stages	
z	altitude	ft

Symbol	Concept	Typical units
α	angle of absolute velocity (fig. 4)	deg
α	coefficient of thermal expansion, temperature coefficient in general	$1/^{\circ}F$
β	angle of relative velocity (fig. 4)	deg
Γ	circulation	sq ft/sec
γ or k	ratio of specific heats (c_p/c_v)	dimensionless
γ	weight density (ρg)	lb/cu ft
Δ	prefix to indicate change An appended subscript indicates state function constant during change. (Example: $\Delta_s h$ isentropic change in enthalpy)	
Δh_L	leaving loss $(V_e^2/2gJ)$	Btu/lb
$\Delta h_{L,x}$	axial component of leaving loss $(V_{x,e}^2/2gJ)$	Btu/lb
δ	pressure reduction ratio $(p/p^*$ or $\gamma p/\gamma^* p^*)$ (* reference state of gas)	dimensionless
ζ	loss coefficient (energy loss per unit of kinetic energy)	dimensionless
η	efficiency	dimensionless
θ	temperature reduction ratio $(T/T^*$ or $\gamma RT/\gamma^* R^* T^*)$	dimensionless
μ	absolute viscosity	(lb)(sec)/sq ft
ν	kinematic viscosity	sq ft/sec
ν	turbine or stage velocity ratio	dimensionless
ρ	mass density	slug/cu ft
ρ	reheat coefficient	dimensionless

1010

1010

Symbol	Concept	Typical units
$\rho + 1$	reheat factor	dimensionless
σ	density reduction ratio (ρ/ρ^*)	dimensionless
ψ	velocity coefficient, $\psi^2 = 1/(1+\zeta)$ is the energy coefficient	dimensionless
ω	angular velocity	radian/sec

Subscripts:

b	burner
c	compressor
cr	critical, state at speed of sound
D	dilution coolant
d	diffuser
e	exhaust (a number may be used instead of e)
h	station at inner radius
i	inlet (a number may be used instead of i)
i	internal
j	jet
L	loss (except C_L)
M	mechanical
m	mean
n	propulsion nozzle
R	rotor
r	radial projection or component

S stator

st stage

T station at outer radius

t turbine

u tangential

x axial projection or component

Numerical subscripts are used to indicate stations in the turbine or engine.

0 NACA sea-level air

Superscripts:

* reference state of gas

' stagnation state

" relative stagnation state

Quantities of state (h, p, s, T, u, v) of a moving fluid are defined for an observer moving with the fluid. The stagnation state is the state of the fluid after it is brought to rest by an adiabatic reversible process. The quantities related to the stagnation state are indicated by a prime (h', p', s', T', u', v'). If the fluid is thus brought to rest with respect to the moving blades, the relative stagnation state thus attained is symbolically indicated by a double prime (h", p", s", T", u", v").

DEFINITIONS RELATED TO STRUCTURE OF AN AXIAL-FLOW TURBINE STAGE

A turbine stage consists of a set of stator blades and a set of rotor blades. The construction may be drum (fig. 1) or shrouded (fig. 2) or combinations of the two, the chief difference being in the provisions to prevent leakage.

A developed section along the blade path gives the essential dimensions of the stator and rotor cascades (fig. 3). The airfoils are descriptively determined by a base line, a camber line, and a

1010

thickness distribution. The base line is tangent to the concave surface of the airfoil. The chord is the length on the base line cut off by normals from the intersections of the airfoil camber line with the airfoil surface at the leading and trailing edges. The orientation of the airfoils to make up the cascade is determined by the pitch and the stagger angle, forming the opening $AB = d$ between the airfoils at the exit section.

The rotor and stator cascades differ for the various radii in the stage. The cascade at the arithmetic mean radius of the flow annulus is of particular importance because it can usually be made the basis for the average function of the stage.

DEFINITIONS RELATED TO FUNCTIONS OF TURBINE STAGE

The velocity diagram (fig. 4) represents the designer's conception of the circumferentially averaged flow velocities. This velocity diagram varies with the radius; unless specifically assigned to any particular radius, the velocity diagram usually refers to the mean radius. The velocity V_1 is part of the velocity diagram for the preceding stage.

The Mollier (h-s) diagram (fig. 5) gives the energy relations corresponding to the velocity diagram. Adiabatic flow is assumed. The following definitions relate to the function of the stage as exhibited through the velocity and Mollier diagrams:

h_1	inlet enthalpy
$\frac{V_1^2}{2gJ}$	carry-over energy from preceding stage (For first stage this is turbine-inlet kinetic energy.)
$h'_1 = h_1 + \frac{V_1^2}{2gJ} = h'_2$	stagnation enthalpy, stator
h_2	exhaust enthalpy, stator
$\frac{W_2^2}{2gJ}$	carry-over energy from stator to rotor
$h''_2 = h_2 + \frac{W_2^2}{2gJ} = h''_3$	relative stagnation enthalpy, rotor
h_3	exhaust enthalpy, rotor

$\frac{V_3^2}{2gJ}$	carry-over energy to next stage (leaving loss for last stage Δh_L)
$h'_3 = h_3 + \frac{V_3^2}{2gJ}$	exhaust stagnation enthalpy
$\Delta_s h_S$	isentropic enthalpy drop, stator
$\Delta_s h_R$	isentropic enthalpy drop, rotor
$\Delta_s h_{st}$	isentropic enthalpy drop, stage
$(\zeta_S)\left(\frac{V_2^2}{2gJ}\right) = \left(\frac{1}{\psi_S^2} - 1\right)\left(\frac{V_2^2}{2gJ}\right)$	loss, stator (kinetic energy irreversibly converted into heat)
$(\zeta_R)\left(\frac{W_3^2}{2gJ}\right) = \left(\frac{1}{\psi_R^2} - 1\right)\left(\frac{W_3^2}{2gJ}\right)$	loss, rotor
Δh or Δh_{st}	enthalpy drop, stage
$\Delta h'$ or $\Delta h'_{st} = \Delta h + \frac{V_1^2 - V_3^2}{2gJ}$	stagnation enthalpy drop (work done in stage, "Btu into work," output)
$\Delta_s h'$ or $\Delta_s h'_{st}$	stagnation enthalpy drop available for stage (input, isentropic enthalpy drop from inlet stagnation pressure and temperature to final stagnation pressure)
$\eta_{st} = \frac{\Delta h'}{\Delta_s h'}$	stage efficiency (internal efficiency of stage)

The stage efficiency is functionally related to the following variables computed on the mean radius:

$\nu = \frac{U_m}{\sqrt{2gJ\,\Delta_s h + V_1^2}}$	velocity ratio
p'_1/p_2 or p'_1/p'_2	pressure ratio
R_2 or R_3	Reynolds number

The Reynolds number corresponding to that used in channel flow is defined for the discharge of the stator blades (R_2) or rotor blades (R_3) at the mean radius. The characteristic length used is the hydraulic diameter of the throat section $D_h = 4bd_m/2(b+d_m)$. If the sum of the perimeters of all the throat sections in the row is denoted by l_2 for the stator- and l_3 for the rotor-blade passages,

$$R_2 = \frac{w}{g\mu_2 \frac{l_2}{4}}$$

$$R_3 = \frac{w}{g\mu_3 \frac{l_3}{4}}$$

Turbine stages are classified with respect to the degree of reaction, which is usually defined as the ratio of isentropic enthalpy drop across the rotor to the isentropic enthalpy drop across the stage. The 50-percent reaction stage, in which stator and rotor airfoils are identical and the velocity triangles symmetrical (sometimes referred to as the "reaction stage"), is defined as the symmetrical stage. The impulse stage, in which the enthalpy drop across the rotor is zero, is defined as the zero-reaction stage.

For stages in which the change in radius from the inner to the outer boundary is appreciable (appreciable values of b/D), this distinction between different types of stage has lost its significance, inasmuch as the same stage may have zero reaction at the inner radius and considerable reaction at the outer radius.

The constant-circulation stage is an idealized stage in which the angles and area distribution are chosen in such a manner that for an inviscid fluid the quantities $V_{x,2}$, $rV_{u,2}$, $V_{x,3}$, $rV_{u,3}$, h'_1, and h'_3 are constant along the radius. The circulation around the stator and rotor airfoils, as well as the work done, is then constant along the radius. This idealized stage cannot be realized in practice.

DEFINITIONS RELATED TO FUNCTIONS OF TURBINE

The following quantities relate to the performance of a single-stage or a multistage turbine (fig. 6):

T'_i	inlet stagnation temperature
p'_i	inlet stagnation pressure
p_e	exhaust pressure
$\Delta_s h$	isentropic enthalpy drop from inlet state to exit pressure
$\Delta_s h'$	isentropic enthalpy drop from inlet stagnation state to exit stagnation pressure
$\Delta h'$	stagnation enthalpy drop
$\Delta h_L = \frac{V_e^2}{2gJ}$	leaving loss
$\Delta h_{L,x} = \frac{V_{x,e}^2}{2gJ}$	part of leaving loss resulting from axial component of velocity
$\eta_i = \frac{\Delta h'}{\Delta_s h'}$	internal efficiency
$\eta_{net} = \frac{\Delta h'}{\Delta_s h + \frac{V_i^2}{2gJ}}$	net efficiency
w	weight flow rate of gas
$P' = \frac{3600}{2545} w (\Delta h')$	gross power
ΔP_M	mechanical power loss
$P = P' - \Delta P_M$	brake power

The efficiencies (internal or net) are functionally related to the following variables evaluated on the mean diameter:

1010

$\nu = \sqrt{\dfrac{\sum U_m^2}{2gJ\ \Delta_s h + V_i^2}}$ velocity ratio

p'_i/p_e pressure ratio

R Reynolds number (determined for inlet stator R_i, exhaust blade R_e, or any other designated row)

The state of the gas entering the propulsion nozzle (subscript n) may be estimated (fig. 6) by assuming that the kinetic-energy component $V_{u,e}^2/2gJ = \Delta h_L - \Delta h_{L,x}$ is dissipated in friction and turbulence.

In order to make turbine performance comparable for different conditions of the working fluid, turbine-performance parameters are reduced to equivalent values for a designated standard inlet state of the gas.

Departures from this state are measured by the following variables:

$\delta'_i = p'_i/p^*$ inlet-stagnation-pressure reduction ratio

$\theta'_i = T'_i/T^*$ inlet-stagnation-temperature reduction ratio

$\sigma'_i = \rho'_i/\rho^*$ inlet-stagnation-density reduction ratio

The following quantities are used in representing the performance of a turbine over an extended range of states of the incoming gas:

$\dfrac{w\sqrt{\theta'_i}}{\delta'_i}$ equivalent weight flow

$n/\sqrt{\theta'_i}$ equivalent rotational speed

The equivalent flow and the efficiencies are functionally related to equivalent speed, pressure ratio, and Reynolds number.

The preceding method of representing the performance of a turbine over a wide range of operating conditions does not take into account the variation of $\gamma = c_p/c_v$ with temperature. The slight inaccuracy introduced by this variation may be approximately

compensated for by replacing the turbine pressure ratio p'_i/p_e with the expression $(p'_i/p_e)^{\gamma^*/\gamma}$, the temperature reduction ratio $\theta'_i = T'_i/T^*$ with $\theta'_i = \gamma RT'_i/\gamma^* R^* T^*$, and the pressure reduction ratio $\delta'_i = p'_i/p^*$ with $\gamma p'_i/\gamma^* p^*$. 1010

In cooled turbines or turbines with appreciable heat loss, modification of the efficiencies to include the effects of the cooling may be desirable. Cooling may be obtained by one or both of the following methods:

(a) The coolant flows in a closed circuit and dissipates heat at the rate Q (Btu/sec).

(b) The coolant flow per unit time w_d (lb/sec) discharges into the turbine and is taken through a positive change in stagnation enthalpy $\Delta h'_d$ and mixed with the main flow.

In these cases the drop in stagnation enthalpy $\Delta h'$ is not equal to the work output per pound of fluid, which is equal to $\Delta h' - (w_d/w)\,\Delta h'_d - Q/w$, and the efficiencies and gross power are computed with this modification of work output.

Lewis Flight Propulsion Laboratory,
National Advisory Committee for Aeronautics,
Cleveland, Ohio, January 24, 1949.

REFERENCE

1. Anon.: The Third International Conference on Steam Tables. Mech. Eng., vol. 57, no. 11, Nov. 1935, pp. 710-713.

1010

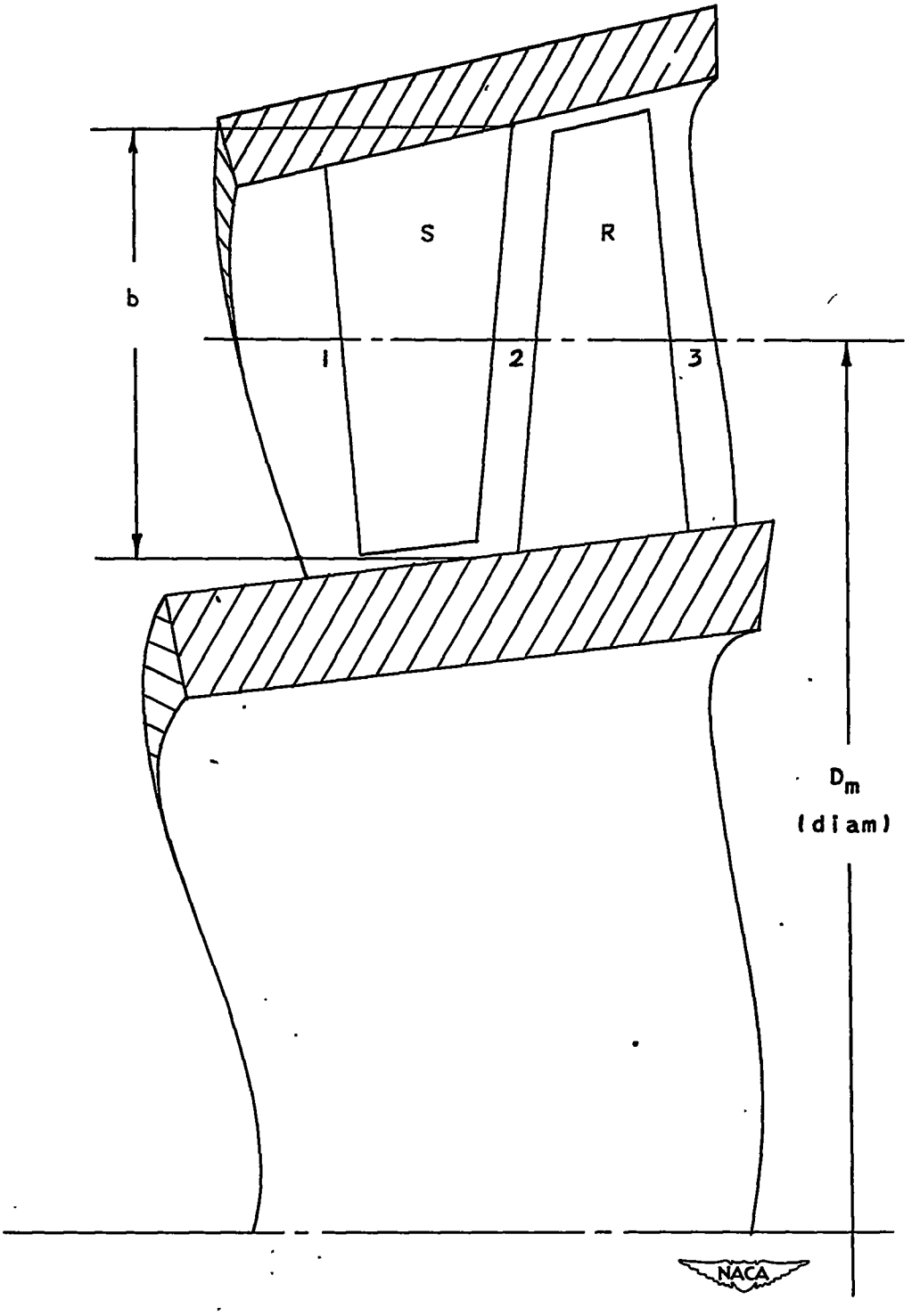

Figure 1. - Typical drum construction in turbine.

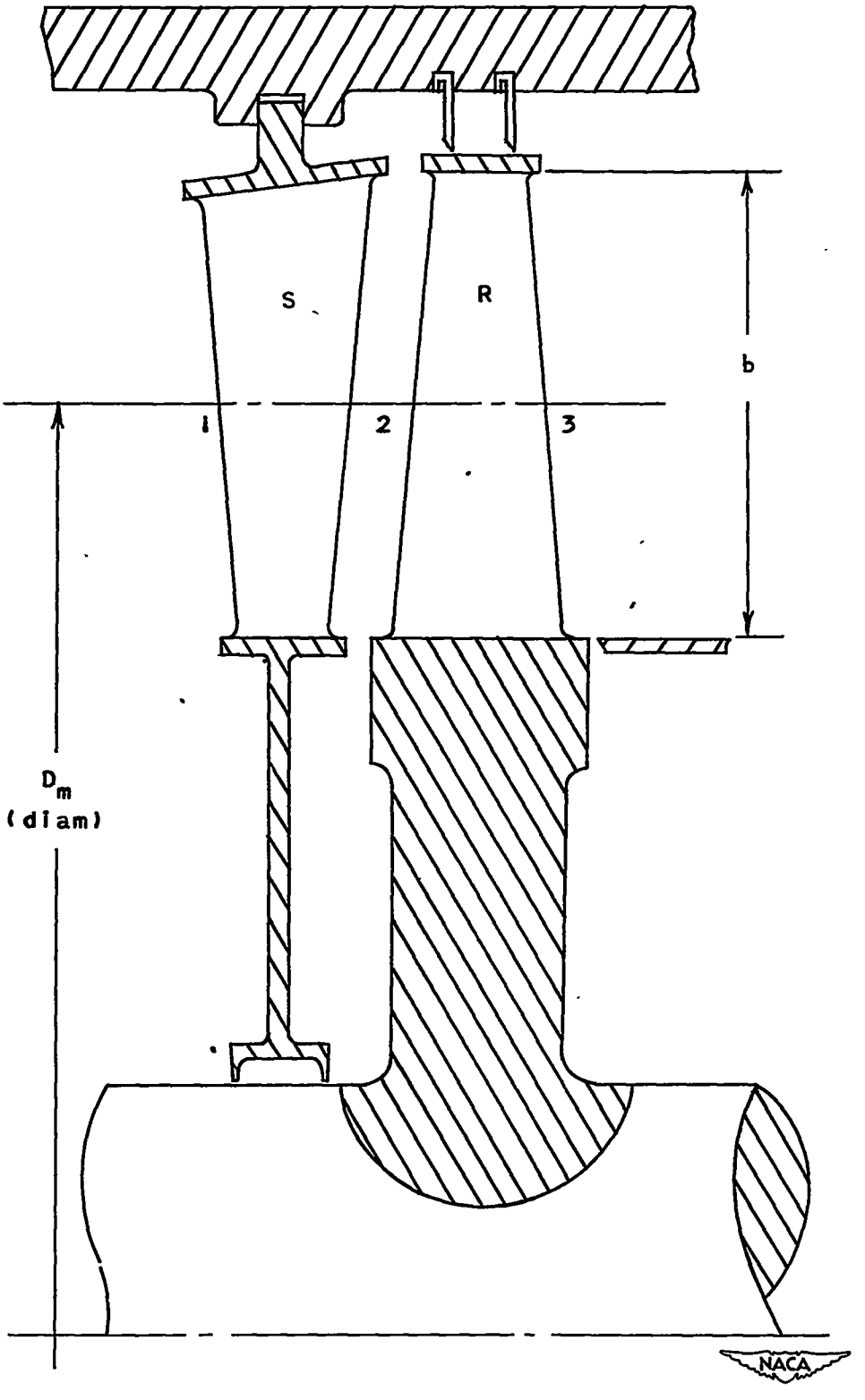

Figure 2. - Typical shrouded construction in turbine.

1010

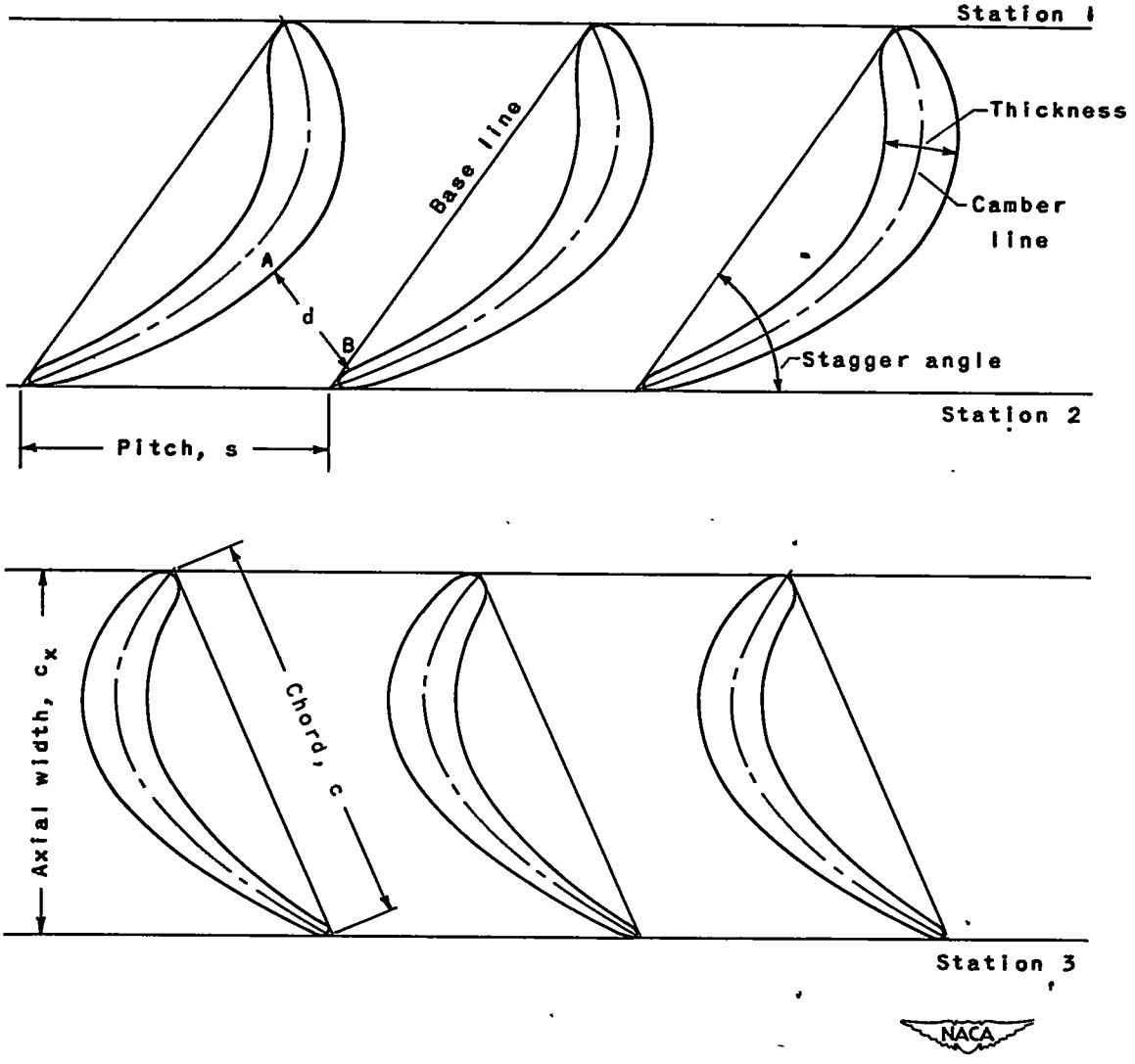

Figure 3. - Developed section of turbine blading showing stator and rotor cascades of a stage.

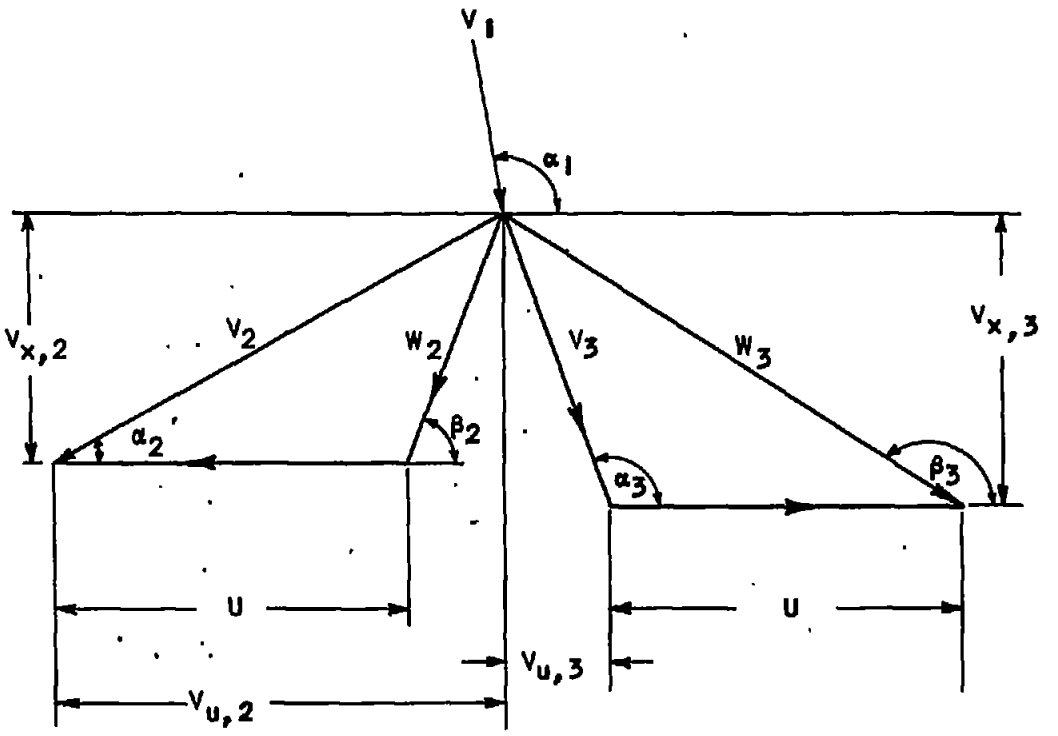

Figure 4. - Velocity-diagram notation for stator and rotor components of a stage.

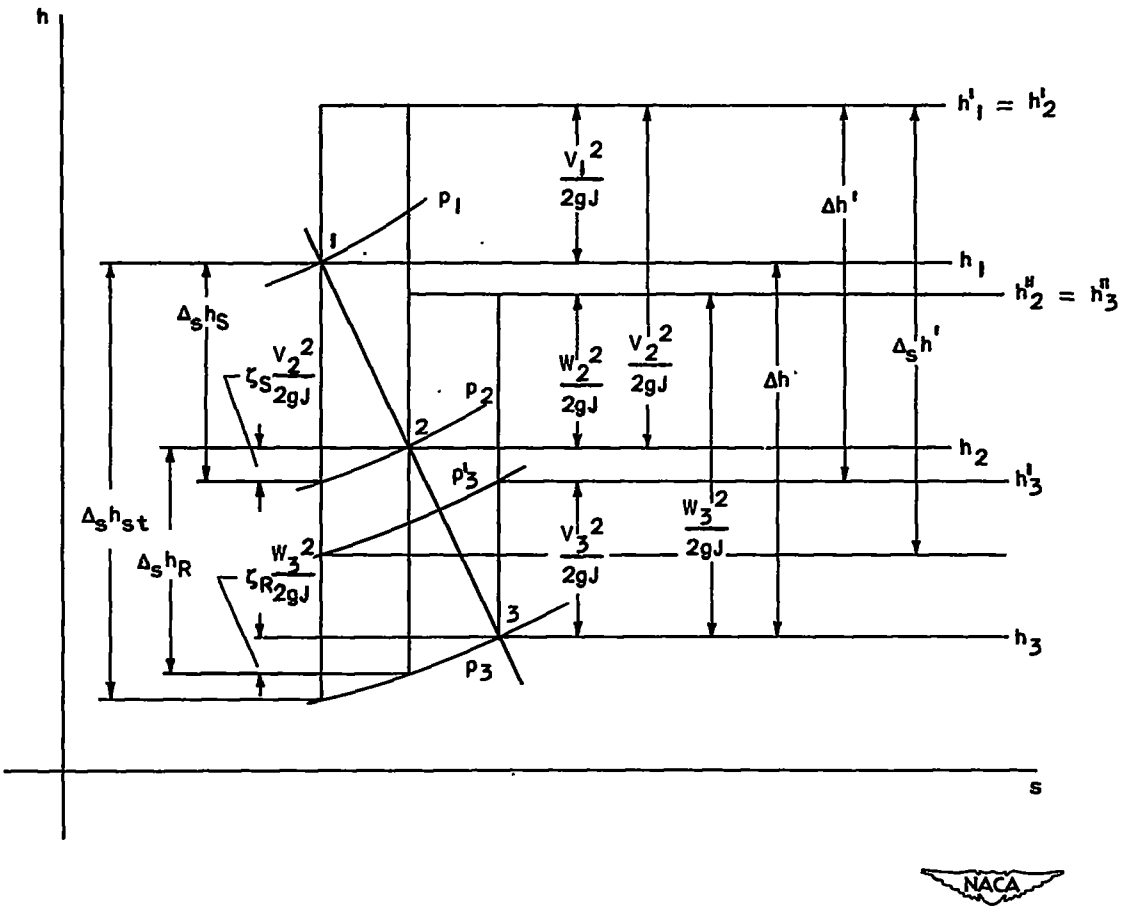

Figure 5. - Mollier diagram for stator and rotor components of a stage.

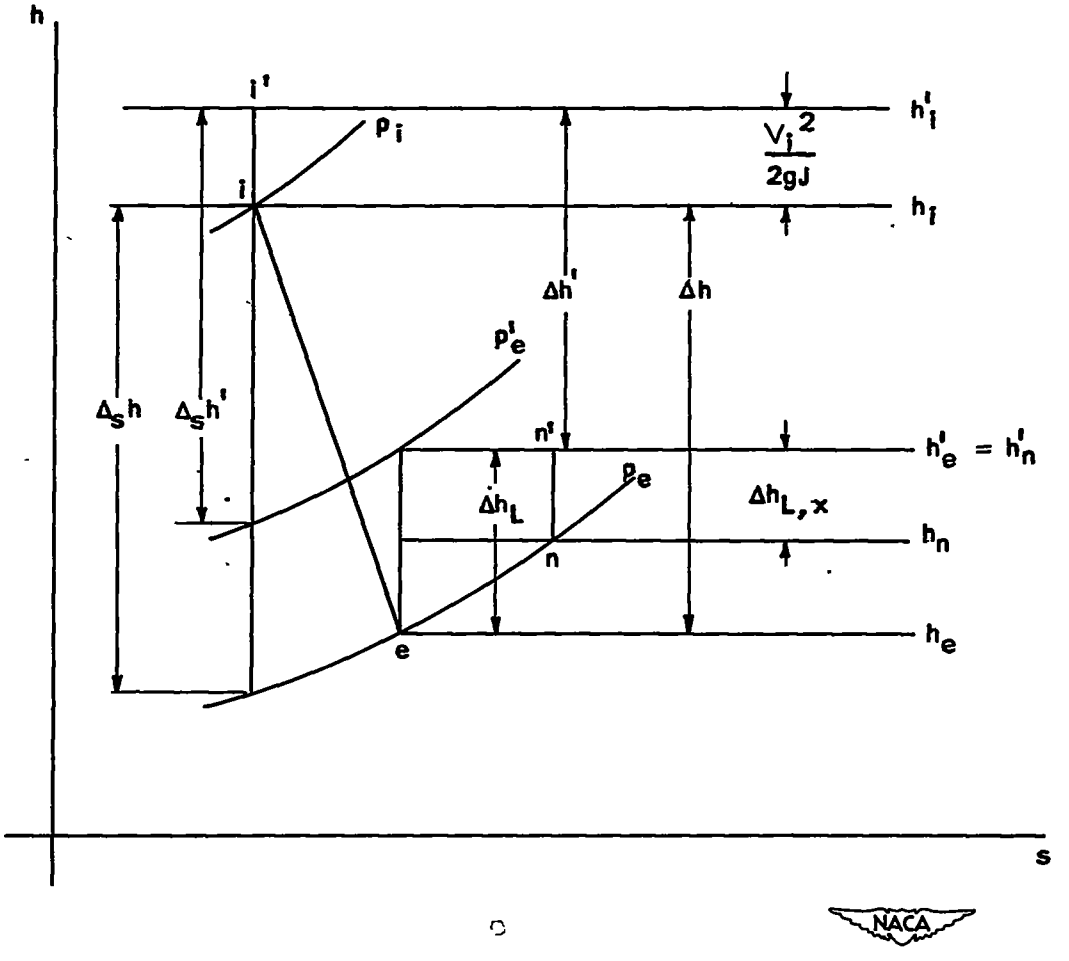

Figure 6. - Mollier diagram for turbine.