8482

NACA TN 2056

TECH LIBRARY KAFB, NM
0065297

NATIONAL ADVISORY COMMITTEE FOR AERONAUTICS

TECHNICAL NOTE 2056

VELOCITY DISTRIBUTION ON WING SECTIONS OF ARBITRARY SHAPE IN COMPRESSIBLE POTENTIAL FLOW

III - CIRCULATORY FLOWS OBEYING THE SIMPLIFIED DENSITY-SPEED RELATION

By Lipman Bers

Syracuse University

Washington
March 1950

AFMDC
TECHNICAL LIBRARY
AFL 2811

319.98/41

TECH LIBRARY KAFB, NM

0065297

NATIONAL ADVISORY COMMITTEE FOR AERONAUTICS

TECHNICAL NOTE 2056

VELOCITY DISTRIBUTION ON WING SECTIONS OF ARBITRARY SHAPE IN COMPRESSIBLE POTENTIAL FLOW

III – CIRCULATORY FLOWS OBEYING THE SIMPLIFIED DENSITY-SPEED RELATION

By Lipman Bers

SUMMARY

The method of computing velocity and pressure distributions along wing profiles under the assumption of the simplified density-speed relation, outlined in NACA Technical Note 1006, is extended to the case of a nonsymmetrical profile and a flow with circulation. The shape of the profile, the speed of the undisturbed flow, and a parameter determining the angle of attack may be prescribed. The problem is reduced to a nonlinear integral equation which can be solved numerically by an iteration method. A numerical example is given.

INTRODUCTION

This paper treats the flow of a compressible fluid past a wing section under the assumption of Chaplygin's simplified density-speed relation (references 1, 2, and 3). The method is sufficiently well known to preclude the necessity of a detailed discussion. It will suffice to recall that it consists of replacing the "exact" density-speed relation in a potential flow

$$\rho = \rho_0\left(1 - \frac{\gamma - 1}{2}\frac{q^2}{a_0^2}\right)^{\frac{1}{\gamma-1}} \tag{1}$$

(where ρ is the density, q the speed, a the speed of sound, γ the ratio of specific heats, and the subscript zero refers to the stagnation values) by the "approximate" relation

$$\rho = \rho_0\left(1 + \frac{q^2}{a_0^2}\right)^{-\frac{1}{2}} \tag{2}$$

which can be obtained from equation (1) by setting $\gamma = -1$. Under the assumption of relation (2), the continuity equation for the potential of a steady two-dimensional flow

$$\frac{\partial}{\partial x}\left(\rho\frac{\partial\phi}{\partial x}\right) + \frac{\partial}{\partial y}\left(\rho\frac{\partial\phi}{\partial y}\right) = 0$$

becomes the classical equation of a minimal surface.

For flows past airfoils obeying the simplified density-speed relation, the "inverse problem" (construction of a flow past a profile without predetermining the shape of the profile) was solved by Tsien (reference 4) for flows without circulation. A formula generating circulatory flows was given by the author (reference 5) and, in a more elegant and general form, by Gelbart (reference 6). The latter result was also obtained independently by Lin (reference 7). In a recent report (reference 8) the "direct problem" (construction of a flow past a given profile) was solved for the case of a circulation-free flow and a symmetrical profile. The solution for the general case is given in this report. It will be seen that the corresponding boundary-value problem is equivalent to a mapping problem, similar to the conformal mapping problem occurring in the theory of incompressible fluid. This mapping problem may be reduced to an integral equation somewhat similar to the well-known equation of Theodorsen and Garrick but not identical with it even in the case of infinitely slow (and therefore incompressible) flows. The integral equation can be solved numerically by an iteration method which seems to converge, though a rigorous convergence proof is still lacking.

The procedure for computing velocity distribution is described in the main part of the paper; the mathematical derivation and justification will be found in the appendix.

The method described in this report could be extended to the case of gases obeying the actual equation of state (or, for that matter, any prescribed pressure-density relation) as was done for the case of symmetrical flows (reference 9). The computational labor involved in treating this case would be so extensive that a detailed description does not seem to be called for at present.

The author wants to draw attention to a paper by A. Gelbart and D. Resch (reference 10) in which a different method of obtaining velocity distributions along preassigned profiles is used. While Gelbart's method does not aim at obtaining exact values, it does achieve good approximations and involves very little computational labor.

This investigation was conducted at Syracuse University under the sponsorship and with the financial assistance of the National Advisory Committee for Aeronautics.

The author is greatly indebted to Miss Elizabeth H. Wetherell for competent assistance.

SYMBOLS

$A(\omega)$	auxiliary function defined by equation (A23)
a	local speed of sound
a_0	speed of sound at stagnation point
$B(\omega)$	auxiliary function defined by equation (A23)
c	positive constant
ds	line element in z-plane; line element of profile P
dS	line element on minimal surface $\phi(x,y)$ whose projection is ds
$E(P)$	domain exterior to profile P
$f(\omega)$	function equal to $f^*(\omega - \omega_0)$
$f_n(\omega)$	nth approximation to function $f(\omega)$
$f^*(\omega)$	function defining mapping of circle into profile P
g_i	function defined in section 3 under ANALYSIS
g_{ik}	coefficients of metric dS^2
G	complex potential of a compressible flow
$h(\omega)$	function defined by equation (10)

l	line through z_T directed toward $E(P)$ and bisecting angle at z_T
L^*	function defined by equation (A35)
M_∞	stream Mach number
P	profile in z-plane
q	speed
q_∞	speed of undisturbed flow
$\tilde{q}[f(\omega)]$	value of q at a boundary point
q^*	distorted speed
$\tilde{q}^*[f(\omega)]$	value of q^* at a boundary point
$\tilde{q}^*_{max}$	maximum of $\tilde{q}^*$
q^*_∞	distorted speed of flow at infinity
R	radius of circle in ζ-plane
Re	real part of following term
s	arc length measured along P
S	total length of curve P
u,v	components of velocity
w	complex velocity
w^*	distorted complex velocity
x,y	Cartesian coordinates in z-plane
$z = x + iy$	complex variable
z_L	complex variable on leading edge
z_T	complex variable on trailing edge
$Z(\sigma)$	coordinate of profile as a function of parameter σ

α	angle of attack
β	angle at trailing edge
γ	exponent in adiabatic relation
Γ	circulation of flow
$\zeta = \xi + i\eta$	auxiliary complex variable
θ	slope of velocity vector
$\tilde{\theta}$	value of θ on boundary
$\Theta(\sigma)$	function determining shape of curve P
λ	square of distorted speed of undisturbed flow
$\Lambda(\omega)$	function defined by equations (9)
ξ,η	Cartesian coordinates in ζ-plane
ρ	density
ρ_0	stagnation density
σ	dimensionless length parameter along profile P
σ_L	parameter value corresponding to point z_L on P
σ_1	prescribed value of $f(\omega_1)$
ϕ	velocity potential
$\tilde{\phi}(\sigma)$	value of ϕ at boundary
$\chi(\zeta)$	auxiliary analytic function defined by equation (A22)
ψ	stream function
ω	argument of a point on circle $\lvert\zeta\rvert = R$
ω_0	parameter determining angle of attack and circulation
$\omega_0^{(n)}$	nth approximation to parameter ω_0
ω_1	value of ω for which $f(\omega) = \sigma_1$

ANALYSIS

1. The Boundary-Value Problem and the Mapping Problem

Given a profile P (see fig. 1) in the plane of the complex variable $z = x + iy$. The profile P is assumed to be a smooth curve except perhaps for a sharp corner at the trailing edge z_T. Let l be a directed straight line passing through the point z_T, pointing toward the domain exterior to P and bisecting the angle at z_T. (If P has a cusp at z_T, l shall be tangent to P at this point.) The position of P can be specified by prescribing the angle α by which l must be turned in order to make it coincide with the positive x-axis. This angle will be called the angle of attack and it will be assumed that $|\alpha| < \frac{\pi}{2}$.

Let s denote the arc length on P measured in the counterclockwise direction from the point z_T. It will be convenient to use the dimensionless parameter

$$\sigma = 2\pi s/S$$

where S is the total length of the curve P. The shape of P is determined by the function $\Theta(\sigma), 0 \leq \sigma \leq 2\pi$, which denotes the angle between l and the tangent to P at a point corresponding to the parameter value σ, the tangent pointing in the direction of increasing σ (cf. fig. 1). Note that

$$\left.\begin{aligned} \Theta(0) &= \pi - \frac{\beta}{2} \\ \Theta(2\pi) &= 2\pi + \frac{\beta}{2} \end{aligned}\right\} \tag{3}$$

β being the angle at the trailing edge.

It is required to find a steady compressible potential flow around the profile P which is parallel to the x-axis far away from the profile and has there a prescribed speed q_∞. The flow should obey the simplified density-speed relation (2) and satisfy the Kutta-Joukowski condition (i.e., the trailing edge should be a stagnation point, or at least, if P has a cusp at z_T, a point where the streamline divides itself into two branches). It is assumed that the values of α

and q_∞ are such that there exists one more stagnation point, at some point z_L of P corresponding to the parameter value σ_L.

It will be shown in the appendix that this problem is equivalent to the determination of a mapping of the domain E(P) exterior to the profile P onto the domain $|\zeta| > R$ in the plane of the auxiliary complex variable ζ, in such a way that the potential and stream function of the flow become conjugate harmonic functions in the ζ-plane. The mapping should take $z = \infty$ into $\zeta = \infty$ and should preserve the length and direction of a horizontal line element at infinity.

By this mapping the profile P goes over into the circle $|\zeta| = R$, the points $z = z_T$ and $z = z_L$ being taken into $\zeta = Re^{-i\omega_0}$ and $\zeta = -Re^{i\omega_0}$, respectively (see fig. 2). The point-to-point correspondence between P and the circle is described by an increasing function

$$\sigma = f^*(\omega), \; -\omega_0 \leq \omega \leq 2\pi - \omega_0 \tag{4}$$

such that $z = Z(\sigma)$ corresponds to $\zeta = Re^{i\omega}$. In particular

$$\left.\begin{aligned} f^*(-\omega_0) &= 0 \\ f^*(\pi + \omega_0) &= \sigma_L \\ f^*(2\pi - \omega_0) &= 2\pi \end{aligned}\right\} \tag{5}$$

It will be more convenient to use the function

$$f(\omega) = f^*(\omega - \omega_0) \tag{6}$$

satisfying the relations

$$\left.\begin{aligned} f(0) &= 0 \\ f(\pi + 2\omega_0) &= \sigma_L \\ f(2\pi) &= 2\pi \end{aligned}\right\} \tag{7}$$

It will be seen that the functions $f(\omega)$ can be computed by solving a nonlinear integral equation.

2. Computations of the Velocity Distribution, the Angle of Attack, and the Circulation

It turns out that the function $f(\omega)$ determines completely the mapping from the ζ-plane into the z-plane, as well as the velocity distribution of the flow. The boundary values of quantities characterizing the flow will be denoted by tildes and considered as functions of the parameter σ. Thus $\tilde{\phi}(\sigma)$ denotes the value of the potential at the point corresponding to the parameter value σ.

The speed of the flow at infinity will be characterized by means of the parameter

$$\lambda = \frac{q_\infty^2}{a_0^2} \frac{1}{\left(1 + \sqrt{1 + \frac{q_\infty^2}{a_0^2}}\right)^2} \tag{8}$$

Set

$$\left.\begin{aligned} \Lambda(\omega) &= \Theta\left[f(\omega)\right] - \frac{\beta + \pi}{2\pi}\omega, \quad 0 \leq \omega \leq 2\pi \\ \Lambda(\omega) &= \Lambda(\omega + 2\pi) \end{aligned}\right\} \tag{9}$$

and

$$h(\omega) = \frac{1}{2\pi}\int_0^\pi \left[\Lambda(\omega + t) - \Lambda(\omega - t)\right] \cot\frac{t}{2}\, dt \tag{10}$$

The speed of the flow at the profile is given by the formula

$$\tilde{q}\left[f(\omega)\right] = a_0 \frac{2\tilde{q}^*\left[f(\omega)\right]}{1 - \tilde{q}^*\left[f(\omega)\right]^2} \tag{11}$$

where

$$\tilde{q}^*\left[f(\omega)\right] = \sqrt{\lambda}\, 2^{1+\frac{\beta}{\pi}} \left|\sin\frac{\omega}{2}\right|^{\frac{\beta}{\pi}} \left|\cos\frac{\omega - 2\omega_0}{2}\right| e^{h(\omega)} \tag{12}$$

The angle of attack α is determined by

$$\alpha = \omega_0 - \frac{3\pi}{2} + \frac{1}{2\pi}\int_0^{2\pi} \Theta\left[f(\omega)\right] d\omega \tag{13}$$

Finally, the circulation of the flow equals

$$\Gamma = -a_0 \frac{2^{2+\frac{\beta}{\pi}}\pi\sqrt{\lambda}\, S \sin\omega_0}{\displaystyle\int_0^{2\pi} \left|\sin\frac{\omega}{2}\right|^{1-\frac{\beta}{\pi}} \left[e^{-h(\omega)} - \lambda 2^{2+\frac{2\beta}{\pi}} \left|\sin\frac{\omega}{2}\right|^{\frac{2\beta}{\pi}} \cos^2\frac{\omega - 2\omega_0}{2}\, e^{h(\omega)}\right] d\omega} \tag{14}$$

It will be seen that the function $f(\omega)$ can be computed. Thus it is possible to determine a flow for a given function $\Theta(\sigma)$, that is, for a profile of given shape and for a given value of the parameter λ, that is, for a given speed of the undisturbed flow. The parameter ω_0 determines the angle of attack and the circulation. In particular, the value $\omega_0 = 0$ leads to a circulation-free flow.

3. The Integral Equation

The function $f(\omega)$ satisfies the relation

$$f(\omega) = 2\pi \frac{\displaystyle\int_0^{\omega} \left|\sin\frac{\omega'}{2}\right|^{1-\frac{\beta}{\pi}} \left[e^{-h(\omega')} - \lambda 2^{2+\frac{2\beta}{\pi}} \left|\sin\frac{\omega'}{2}\right|^{\frac{2\beta}{\pi}} \cos^2\frac{\omega' - 2\omega_0}{2}\, e^{h(\omega')}\right] d\omega'}{\displaystyle\int_0^{2\pi} \left|\sin\frac{\omega'}{2}\right|^{1-\frac{\beta}{\pi}} \left[e^{-h(\omega')} - \lambda 2^{2+\frac{2\beta}{\pi}} \left|\sin\frac{\omega'}{2}\right|^{\frac{2\beta}{\pi}} \cos^2\frac{\omega' - 2\omega_0}{2}\, e^{h(\omega')}\right] d\omega'} \tag{15}$$

where $h(\omega)$ is given by equations (9) and (10). Since the right-hand side depends on f, equation (15) is a nonlinear integral equation.

For $\omega_0 = 0$ the integral equation reduces to the one derived previously (reference 8) under the special assumption that the profile

is symmetrical with respect to the x-axis. The special case $\lambda = 0$ corresponds to an infinitely slow flow. For $\lambda = 0$ the integral equation becomes

$$f(\omega) = 2\pi \frac{\int_0^{\omega} \left|\sin \frac{\omega'}{2}\right|^{1-\frac{\beta}{\pi}} e^{-h(\omega')} \, d\omega'}{\int_0^{2\pi} \left|\sin \frac{\omega'}{2}\right|^{1-\frac{\beta}{\pi}} e^{-h(\omega')} \, d\omega'}$$

It is seen that $f(\omega)$ does not depend on ω_0. This had to be expected; for in this case the function $f(\omega)$ describes the correspondence between P and $|\zeta| = R$ resulting from a conformal mapping of $E(P)$ onto $|\zeta| > R$. In fact, an infinitely slow compressible flow is equivalent to an incompressible flow.

The right-hand side of equation (15) will be denoted by $F[\omega, f(\omega'), \lambda, \omega_0]$. The integral equation may be written in the symbolic form

$$f = F(f, \lambda, \omega_0) \tag{16}$$

In this equation λ and ω_0 are fixed parameters. Instead of determining the speed of the flow by the value of λ (i.e., by the value of q_∞) it may be desirable to prescribe the value of the maximum local speed q_{max}. It is known (and follows from the formulas given by the appendix) that the speed attains its maximum at the boundary. According to equation (11), prescribing the maximum local speed is tantamount to prescribing the maximum of the function $\tilde{q}^*$ defined by equation (12). Let this maximum be denoted by $\tilde{q}^*_{max}$. It follows from equation (12) that

$$\sqrt{\lambda} = \frac{\tilde{q}^*_{max}}{2^{1+\frac{\beta}{\pi}}} \left\{ \max \left[\left|\sin \frac{\omega}{2}\right|^{\frac{\beta}{\pi}} \left|\cos \frac{\omega - 2\omega_0}{2}\right| e^{h(\omega)} \right] \right\}^{-1} \tag{17}$$

$$0 \leq \omega \leq 2\pi$$

or

$$\lambda = g_1\left(f, \tilde{q}^*_{max}, \omega_0\right) \tag{18}$$

where g_1 denotes the square of the right-hand side of equation (17). If $\tilde{q}^*_{max}$ is the prescribed value and λ the unknown quantity, then equation (17) must be replaced by the system

$$\left.\begin{aligned} f &= F(f, \lambda, \omega_0) \\ \lambda &= g_1\left(f, \tilde{q}^*_{max}, \omega_0\right) \end{aligned}\right\} \tag{19}$$

Similarly, if instead of prescribing the value of ω_0 it is desired to prescribe the angle of attack α, equation (16) is to be replaced by the system

$$\left.\begin{aligned} f &= F(f, \lambda, \omega_0) \\ \omega_0 &= g_2(f, \lambda, \alpha) \end{aligned}\right\} \tag{20}$$

where $g_2(f, \lambda, \alpha)$ is obtained by solving equation (13),

$$g_2(f, \lambda, \alpha) = \alpha + \frac{3\pi}{2} - \frac{1}{2\pi}\int_0^{2\pi} \Theta\left[f(\omega)\right] d\omega$$

The angle of attack (and hence also ω_0) will be determined if the value of $f(\omega)$ is prescribed at some fixed point ω_1, $0 < \omega_1 < 2\pi$. In fact, expanding the terms $\cos^2 \frac{\omega' - 2\omega_0}{2}$ in equation (15) by means of the addition theorem, it is seen that the condition

$$f(\omega_1) = \sigma_1 \tag{21}$$

is equivalent to a trigonometric equation for the angle ω_0. The coefficients of this equation will depend upon the function f and upon λ (as well as upon ω_1). Denote the solution of this trigonometric equation by

$$\omega_0 = g_3(f, \lambda, \sigma_1) \tag{22}$$

If the angle of attack is determined by means of condition (21) the equations to be solved take the form

$$\left.\begin{aligned} f &= F(f, \lambda, \omega_0) \\ \omega_0 &= g_3(f, \lambda, \sigma_1) \end{aligned}\right\} \tag{23}$$

Although this way of fixing the angle of attack seems rather artificial, it turns out to be advantageous for numerical computations.

4. Solution of the Integral Equation

All four forms of the integral equation given in the preceding section suggest the application of the method of successive approximation. To solve equation (16) for instance, an initial function $f_0(\omega)$ is selected, such that

$$\left.\begin{aligned} f_0' &> 0 \\ f_0(0) &= 0 \\ f_0(2\pi) &= 2\pi \end{aligned}\right\} \tag{24}$$

The operator $F(f, \lambda, \omega_0)$ transforms this function into another function $f_1(\omega)$ which also satisfies conditions (24). Now compute successively the functions

$$\begin{aligned} f_1 &= F(f_0) \\ f_2 &= F(f_1) \\ &\cdots \\ f_{n+1} &= F(f_n) \\ &\cdots \end{aligned}$$

If the sequence (f_n) converges and $F(f_n) \rightarrow F(\lim f_n)$, then the limit $f = \lim f_n$ is a solution of equation (16).

It is easy to see how this procedure has to be modified for the systems (19), (20), and (23). In the case of system (23), for instance, an initial function $f_0(\omega)$ satisfying conditions (24) is chosen, and the function $f_1(\omega)$ and the values $\omega_0^{(1)}$ are computed so that

$$\left.\begin{aligned} f_1 &= F\left(f_0, \lambda, \omega_0^{(1)}\right) \\ \omega_0^{(1)} &= g_3\left(f_1, \lambda, \sigma_1\right) \end{aligned}\right\} \tag{25}$$

This is clearly possible, since the function f_0 determines a function $h(\omega)$ according to equations (9) and (10). With this function $h(\omega)$ and the given values of λ, σ_1, and ω_1, the value $\omega_0^{(1)}$ is determined so that the condition

$$f_1(\omega_1) = \sigma_1$$

be satisfied. Once the value of $\omega_0^{(1)}$ is found, the computation of $f_1(\omega)$ can be completed. The function $f_1(\omega)$ satisfies conditions (24), so that the procedure may be continued. The function $f_n(\omega)$ and the numbers $\omega_0^{(n)}$ are computed by the scheme:

$$f_n = F\left(f_{n-1}, \lambda, \omega_0^{(n)}\right)$$

$$\omega_0^{(n)} = g_3\left(f_n, \lambda, \sigma_1\right)$$

The procedure yields the solution of system (23) provided that it converges, that is, provided that the limits

$$f(\omega) = \lim_{n \to \infty} f_n(\omega)$$

$$\omega_0 = \lim_{n \to \infty} \omega_0^{(n)}$$

exist.

The systems (19) and (20) may be treated in a similar way.

Attempts to settle the convergence question theoretically have failed thus far. On the basis of numerical computations which were carried out, the author believes the iteration method will in general diverge when applied to the equation (16) and will converge for the case of system (23), provided the value of σ_1 is chosen in such a way that the point of P corresponding to the value of σ_1 is close to the point of maximum curvature of the profile. The convergence might be due to the fact that all successive approximations satisfy condition (21). This opinion is substantiated by the fact that previous computations (see reference 8) indicate that the iteration method can be applied successfully to equation (16) provided the profile is symmetrical and the flow is circulation-free. In fact, for a symmetrical profile the condition $\omega_0 = 0$ is equivalent to a condition of the form of equation (21) with $\omega_1 = \sigma_1 = \pi$.

The computation of the successive approximations is a routine matter involving only numerical integration. Note that the integral in equation (10) is a proper Riemann integral, the value of the integral at $t = 0$ being defined as

$$\lim_{t \to 0} \left\{ \left[\Lambda(\omega + t) - \Lambda(\omega - t) \right] \cot \frac{t}{2} \right\}$$

$$= 4\Lambda'(\omega)$$

$$= 4\left\{ \Theta'\left[f(\omega)\right] f'(\omega) - \frac{\pi + \beta}{2\pi} \right\} \tag{26}$$

The rapidity of the convergence will depend upon the choice of the approximation of order 0, $f_0(\omega)$. In general there should be no difficulty in finding a good initial approximation. The remarks concerning this made in reference 8, section 6, apply to the present case with obvious modification.

5. Example

As an example, the velocity distribution of a circulatory flow past a symmetrical Joukowski profile has been computed. The stream Mach number was chosen to be $M_\infty = 0.685$. Since the stream Mach number is connected with the parameter λ by the relation

$$\lambda = \frac{M_\infty^2}{\left(1 + \sqrt{1 - M_\infty^2}\right)^2} \tag{27}$$

the value of λ is 0.157. The thickness of the profile is determined by setting the usual thickness parameter ϵ equal to 0.15. (The significance of ϵ is seen from fig. 3.) The angle of attack was determined by choosing the values

$$\omega_1 = \pi$$

$$\sigma_1 = 3.1222$$

The computation yielded the values

$$\omega_0 = 3^\circ\ 27'$$

$$\alpha = 2^\circ\ 27'$$

The functions $\Theta(\sigma)$ and $\Theta'(\sigma)$ for a Joukowski profile were computed by Saltzer (reference 11). The numerical values of these functions for a symmetrical profile with $\epsilon = 0.15$ are given in reference 8. The solution of the integral equation for $\lambda = 0.157$, $\omega_0 = 0^\circ$ was chosen as $f_0(\omega)$. The values of the successive approximations $f_n(\omega)$, $\omega_0^{(n)}$ are given in table 1. The functions $f_n(\omega)$ were computed for $\omega = 0^\circ, 10^\circ, \ldots, 360^\circ$. The difference between f_8 and f_9 may be considered as negligible within the limits of accuracy of the computations. The resulting velocity distribution is given in table 2 and plotted in figure 3. The points on the profile are characterized by means of the amplitudes δ of the points of the circle into which they are taken by the standard conformal mapping.

The resulting velocity distribution may be compared with that of an incompressible flow $(M_\infty = 0)$ for the same angle of attack, and with that obtained by means of the Kármán-Tsien velocity-correction formula

$$\left(\frac{q}{q_\infty}\right)_c = \left(\frac{q}{q_\infty}\right)_i \frac{1 - \lambda}{1 - \lambda\left(\frac{q}{q_\infty}\right)_i^2} \tag{28}$$

where the subscripts c and i denote compressible and incompressible flow, respectively.

Remark.– During the present investigation, it has come to the author's attention that, in a previous work on this subject (reference 8), there are two errors. In the formula (61) on page 24 (cf. equation (28) of the present report) the exponent 2 is missing in the denominator. In table IIIb the values in the second column have been computed incorrectly. The corrected values are given in table 3 of the present report.

CONCLUDING REMARKS

The integral equation used for the numerical computation of velocity distributions can also be used as a basis of existence theorems for flows obeying the simplified density-speed relation. This, however, is a problem of pure mathematical interest. As stated in the INTRODUCTION, the extension of the present method to subsonic flows obeying the adiabatic pressure-density relation hinges essentially on problems of computational technique.

Syracuse University
Syracuse, N. Y., September 1, 1947

APPENDIX

MATHEMATICAL DERIVATION AND JUSTIFICATION OF PROCEDURE

1. The Boundary-Value Problem

This appendix contains the derivation of the results announced in sections 1 to 3 under ANALYSIS. According to the definition of the quantities α, S, σ, Θ the equation of the profile P may be written in the form

$$z = Z(\sigma) = z_T + \frac{Se^{-i\alpha}}{2\pi}\int_0^\sigma e^{i\Theta(t)}\,dt, \quad 0 \leq \sigma \leq 2\pi \tag{A1}$$

The velocity potential ϕ is defined by the relations

$$\left.\begin{aligned} u &= a_0 \frac{\partial\phi}{\partial x} \\ v &= a_0 \frac{\partial\phi}{\partial y} \end{aligned}\right\} \tag{A2}$$

where u and v are the components of the velocity vector. As stated in the INTRODUCTION, ϕ satisfies the minimal surface equation

$$\left[1 + \left(\frac{\partial\phi}{\partial y}\right)^2\right]\frac{\partial^2\phi}{\partial x^2} - 2\,\frac{\partial\phi}{\partial x}\,\frac{\partial\phi}{\partial y}\,\frac{\partial^2\phi}{\partial x\,\partial y} + \left[1 + \left(\frac{\partial\phi}{\partial x}\right)^2\right]\frac{\partial^2\phi}{\partial y^2} = 0 \tag{A3}$$

It is required to find a solution of equation (A3) defined in the domain $E(P)$ exterior to P and satisfying the conditions

$$\left.\begin{aligned} &\frac{\partial\phi}{\partial x} \rightarrow \frac{q_\infty}{a_0}, \quad \frac{\partial\phi}{\partial y} \rightarrow 0 \quad \text{as} \quad z \rightarrow \infty \\ &\frac{\partial\phi}{\partial n} = 0 \quad \text{on} \quad P \end{aligned}\right\} \tag{A4}$$

(n denoting the direction normal to P) as well as the Kutta-Joukowski condition

$$\left(\frac{\partial\phi}{\partial x}\right)^2 + \left(\frac{\partial\phi}{\partial y}\right)^2 < \infty \text{ at } z_T$$

In general ϕ will not be one-valued. The circulation of the flow is given by

$$\Gamma = \oint (u\,dx + v\,dy) = a_0 \oint d\phi \tag{A5}$$

the integration being performed along any simple closed curve containing P in its interior. It is assumed that there exists exactly one stagnation point different from z_T, $z_L = Z(\sigma_L)$.

Set

$$w = u - iv = qe^{-i\theta} \tag{A6}$$

The function θ (slope of the velocity vector) satisfies the conditions

$$\theta \to 0 \quad \text{as} \quad z \to \infty \tag{A7}$$

$$\theta = \begin{cases} \Theta - \alpha - \pi \text{ on the upper bank of } P \\ \Theta - \alpha - 2\pi \text{ on the lower bank of } P \end{cases} \tag{A8}$$

Here the upper or lower bank of P denotes the arc of P corresponding to the parameter values $0 < \sigma < \sigma_L$ or $\sigma_L < \sigma < 2\pi$, respectively.

The stream function ψ of the flow is defined by the relations

$$\left.\begin{aligned} \frac{\rho u}{\rho_0 a_0} &= \frac{\partial\psi}{\partial y} \\ \frac{\rho v}{\rho_0 a_0} &= -\frac{\partial\psi}{\partial x} \end{aligned}\right\} \tag{A9}$$

where ρ is given by equation (2). Since ψ is constant along any streamline, it may be assumed that $\psi = 0$ on P.

The "distorted complex velocity" is given by

$$w^* = q^* e^{-i\theta} \tag{A10}$$

where q^* is the "distorted speed"

$$q^* = \frac{q}{a_0} \frac{1}{1 + \sqrt{1 + \frac{q^2}{a_0^2}}} \tag{A11}$$

Note that the parameter λ defined by equation (8) satisfies

$$\lambda = \left(q^*_\infty\right)^2 \tag{A12}$$

where q^*_∞ is the value of q^* for the undisturbed flow, and that equation (A11) is equivalent to equation (11).

It has been shown (see, for instance, reference 5) that the complex potential

$$G = \phi + i\psi \tag{A13}$$

is an analytic function of the complex variable w^*.

2. Mapping of the Profile onto a Circle

In this section the existence and uniqueness of the mapping of the domain $E(P)$ described in section 1 under ANALYSIS will be established. This transformation

$$\left.\begin{aligned} \xi &= \xi(x,y) \\ \eta &= \eta(x,y) \end{aligned}\right\} \tag{A14}$$

must satisfy the following conditions:

(1) The transformation (A14) maps $E(P)$ in a one-to-one way onto the domain $|\zeta| > R$, where R is an appropriately chosen positive constant and $\zeta = \xi + i\eta$. The profile P is taken into the circle $\zeta = Re^{i\omega}$, $0 \leq \omega \leq 2\pi$.

(2) The transformation (A14) takes the point $z = \infty$ into $\zeta = \infty$ and, as $z \to \infty$,

$$\left.\begin{aligned} \frac{\partial\xi}{\partial x} &\to 1 & \frac{\partial\eta}{\partial x} &\to 0 \\ \frac{\partial\xi}{\partial y} &\to 0 & \frac{\partial\eta}{\partial y} &\to c > 0 \end{aligned}\right\} \tag{A15}$$

(3) In the ζ-plane the complex variables G and w^* are analytic functions of ζ.

Let ds be a line element in the z-plane, $ds = (dx,dy)$. Let dS denote the length of a line element on the minimal surface $\phi = \phi(x,y)$ whose projection is ds.

Then

$$dS^2 = d\phi^2 + dx^2 + dy^2$$

$$= \frac{1}{a_0^2}(u\,dx + v\,dy)^2 + ds^2$$

or

$$dS^2 = g_{11}\,dx^2 + 2g_{12}\,dx\,dy + g_{22}\,dy^2$$

where

$$g_{11} = 1 + \left(q/a_0\right)^2 \cos^2\theta$$

$$g_{12} = \left(q/a_0\right)^2 \cos\theta \sin\theta$$

$$g_{22} = 1 + \left(q/a_0\right)^2 \cos^2\theta$$

By virtue of classical theorems it is possible to map the domain $E(P)$ in a one-to-one way onto the domain exterior to a circle in the ζ-plane, the mapping being conformal with respect to the Riemannian metric dS. It has been shown (reference 5) that any such mapping satisfies condition (3). By a linear transformation of the ζ-plane it can be achieved that the mapping satisfy condition (2). The constant R is then uniquely determined.

According to the definition of the function $f^*(\omega)$, equation (4) takes the point $z = Z[f^*(\omega)]$ into $\zeta = Re^{i\omega}$.

3. The Complex Potential in the ζ-plane

In the ζ-plane $G = \phi + i\psi$ is an analytic function for $|\zeta| > R$. The harmonic function ψ is one-valued, and $\psi = 0$ for $|\zeta| = R$. The harmonic function ϕ increases by Γ/a_0 as ζ goes once around the circle $|\zeta| = R$ (in the counterclockwise direction). Furthermore, by conditions (A4) and (A15),

$$G'(\infty) = \frac{q_\infty}{a_0} \tag{A16}$$

It follows that G has the form (except perhaps for a nonessential additive constant)

$$G(\zeta) = \frac{q_\infty}{a_0}\left(\zeta + \frac{R^2}{\zeta}\right) + \frac{\Gamma}{a_0 2\pi i} \log \frac{\zeta}{R} \tag{A17}$$

so that

$$\frac{dG}{d\zeta} = \frac{q_\infty}{a_0}\left(1 - \frac{Re^{-i\omega_0}}{\zeta}\right)\left(1 + \frac{Re^{i\omega_0}}{\zeta}\right)$$

where

$$\omega_0 = -\sin^{-1} \frac{\Gamma}{4\pi R q_\infty} \tag{A18}$$

The boundary value of the velocity potential is given by

$$\tilde{\phi}\left[f(\omega)\right] = 2Rq_\infty/a_0\left(\cos\omega - \omega \sin\omega_0\right)$$

so that

$$\frac{d\tilde{\phi}\left[f^*(\omega)\right]}{d\omega} = -4R\,\frac{q_\infty}{a_0} \sin\frac{\omega + \omega_0}{2} \cos\frac{\omega - \omega_0}{2} \tag{A19}$$

Note that the line $\psi = 0$ in the ζ-plane meets the circle $|\zeta| = R$ at $\zeta = Re^{-i\omega_0}$ and at $\zeta = -Re^{i\omega_0}$, whereas the line $\psi = 0$ in the z-plane meets the profile P at z_T and z_L. It follows that

$$\left.\begin{aligned} f^*(-\omega_0) &= 0 \\ f^*(\pi + \omega_0) &= \sigma_L \end{aligned}\right\} \tag{A20}$$

as was asserted in section 1 under ANALYSIS.

4. The Velocity in the ζ-Plane

The distorted velocity w^* is analytic in the ζ-plane. Since $q \neq 0$ in $E(P)$, $w^*(\zeta) \neq 0$ for $|\zeta| > R$, so that

$$\log w^* = \log q^* - i\theta$$

is a regular analytic function in $|\zeta| > R$. By virtue of equations (A8) and (A18) the boundary values of the harmonic function θ are as follows:

$$\tilde{\theta}\left[f^*(\omega)\right] = \begin{cases} \Theta\left[f^*(\omega)\right] - \pi - \alpha, & -\omega_0 < \omega < \pi + \omega_0 \\ \Theta\left[f^*(\omega)\right] - 2\pi - \alpha, & \pi + \omega_0 < \omega < 2\pi - \omega_0 \end{cases} \tag{A21}$$

Thus, if f^* is assumed known, θ may be computed in the whole domain $|\zeta| > R$ (say, by Poisson's integral formula), and so can $\log q^*$ and therefore q. For $\zeta = \infty$ the mean-value theorem for harmonic functions yields

$$\theta\Big|_{\zeta=\infty} = \frac{1}{2\pi}\int_{-\omega_0}^{2\pi-\omega_0} \Theta\left[f^*(\omega)\right] d\omega - \alpha - \frac{3\pi}{2} + \omega_0$$

Recalling the definition of $f(\omega)$ (cf. equation (6)), this may be written

$$\theta\Big|_{\zeta=\infty} = \frac{1}{2\pi}\int_0^{2\pi} \Theta\left[f(\omega)\right] d\omega - \alpha - \frac{3\pi}{2} + \omega_0$$

But, by condition (A7),

$$\theta\Big|_{\zeta=\infty} = 0$$

Formula (13) for the angle of attack follows from these two relations.

It is seen from equations (A21) and (3) that $\tilde{\theta}\left[f^*(\omega)\right]$ experiences jumps of magnitude β and π at $\omega = -\omega_0$ and $\omega = \pi + \omega_0$, respectively. This implies that q^* vanishes at $\zeta = Re^{-i\omega_0}$ as $\left|\zeta - Re^{-i\omega_0}\right|^{\frac{\beta}{\pi}}$ and at $\zeta = -Re^{i\omega_0}$ as $\left|\zeta + Re^{i\omega_0}\right|$. Hence

$$\chi(\zeta) = \frac{w^*\zeta^{1+\frac{\beta}{\pi}}}{\left(\zeta - Re^{-i\omega_0}\right)^{\frac{\beta}{\pi}}\left(\zeta + Re^{i\omega_0}\right)} \tag{A22}$$

is regular for $|\zeta| > R$, continuous for $|\zeta| \geq R$, and everywhere different from 0 or ∞. It follows that $\log \chi(\zeta)$ is regular for $|\zeta| > R$ and continuous for $|\zeta| \geq R$. Set

$$\log \chi\left(Re^{i\omega}\right) = A(\omega) + iB(\omega) \tag{A23}$$

A classical theorem (see, for instance, reference 12, p. 243) yields the relation

$$A(\omega) = -\frac{1}{2\pi}\int_0^{\pi} \left[B(\omega + t) - B(\omega - t)\right] \cot\frac{t}{2} + \log\left|\chi(\infty)\right| \tag{A24}$$

Clearly $\left(\text{since } q^{*2}_{\infty} = \lambda\right)$

$$\chi(\infty) = \sqrt{\lambda} \tag{A25}$$

It follows from equation (A22) that

$$A(\omega) = \log \frac{\tilde{q}^*\left[f^*(\omega)\right]}{2^{1+\frac{\beta}{\pi}} \left| \sin \frac{\omega + \omega_0}{2} \right|^{\frac{\beta}{\pi}} \left| \cos \frac{\omega - \omega_0}{2} \right|} \tag{A26}$$

Also

$$B(\omega) = -\tilde{\theta}\left[f^*(\omega)\right] + \left(1 + \frac{\beta}{\pi}\right)\omega - \frac{\beta}{\pi} \arg\left(e^{i\omega} - e^{-i\omega_0}\right) - \arg\left(e^{i\omega} + e^{i\omega_0}\right) \tag{A27}$$

Since $\tilde{\theta}\left[f^*(\omega)\right]$ is given by equation (A21)

$$B(\omega) = -\Lambda^*(\omega) + \text{Constant} \tag{A28}$$

where

$$\left.\begin{aligned} \Lambda^*(\omega) &= \Theta\left[f^*(\omega)\right] - \frac{\beta + \pi}{2\pi}\omega \\ \Lambda^*(\omega + 2\pi) &= \Lambda^*(\omega) \end{aligned}\right\} \tag{A29}$$

From equations (A26), (A28), and (A24), it follows that

$$\tilde{q}^*\left[f^*(\omega)\right] = \sqrt{\lambda}\, 2^{1+\frac{\beta}{\pi}} \left| \sin \frac{\omega + \omega_0}{2} \right|^{\frac{\beta}{\pi}} \left| \cos \frac{\omega - \omega_0}{2} \right| e^{h^*(\omega)} \tag{A30}$$

where

$$h^*(\omega) = \frac{1}{2\pi} \int_0^{\pi} \left[\Lambda^*(\omega + t) - \Lambda^*(\omega - t)\right] \cot \frac{t}{2}\, dt \tag{A31}$$

Formula (A30) is clearly equivalent to equation (12).

5. The Mapping Function

The knowledge of the function $f(\omega)$ implies the knowledge of the mapping from the domain $|\zeta| > R$ to the z-plane. In fact, using equations (2), (A2), and (A9), it is seen that

$$d\phi = \frac{q}{a_0}\,(dx \cos\theta + dy \sin\theta)$$

$$d\psi = \frac{q/a_0}{\sqrt{1 + \frac{q^2}{a_0^2}}}\,(-dx \sin\theta + dy \cos\theta)$$

so that

$$dz = dx + i\,dy = \frac{1}{2}\,e^{i\theta}\left[\frac{d\phi + i\,d\psi}{q^*} - q^*(d\phi - i\,d\psi)\right]$$

or

$$dz = \frac{1}{2}\left(\frac{dG}{w^*} - \overline{w^*\,dG}\right) \tag{A32}$$

where a bar denotes the conjugate complex quantity. This well-known relation is due to Chaplygin (reference 1). In the ζ-plane it becomes

$$dz = \frac{1}{2}\left[\frac{G'(\zeta)\,d\zeta}{w^*} - \overline{G'(\zeta)w^*\,d\zeta}\right]$$

and since $z = z_T$ corresponds to $\zeta = Re^{-i\omega_0} = \zeta_0$,

$$z = z_T + \frac{1}{2}\int_{\zeta_0}^{\zeta} \frac{G'(\zeta')\,d\zeta'}{w^*(\zeta')} - \frac{1}{2}\overline{\int_{\zeta_0}^{\zeta} G'(\zeta')w^*(\zeta')d\zeta'} \tag{A33}$$

Both integrals are path-independent, the integrands being analytic functions.

In particular, if $|\zeta| = R$ the integration can be performed along an arc of the circle $|\zeta| = R$. Then

$$d\zeta = iRe^{i\omega}\,d\omega$$

$$w^* = \tilde{q}^*\left[f^*(\omega)\right]e^{-i\tilde{\theta}\left[f^*(\omega)\right]}$$

where $\tilde{q}^*$ is given by equation (A30) and $\tilde{\theta}$ by equation (A21). Also, by equation (A19), since $\psi = 0$ on $|\zeta| = R$,

$$G' = -\frac{ie^{-i\omega}}{R}\frac{d\tilde{\phi}\left[f^*(\omega)\right]}{d\omega}$$

$$= 4ie^{-i\omega}(q_\infty/a_0)\sin\frac{\omega+\omega_0}{2}\cos\frac{\omega-\omega_0}{2}$$

If these values are introduced into the right-hand side of equation (A33) and it is noted that for $\zeta = Re^{i\omega}$, $z = Z\left[f^*(\omega)\right]$, the following relation is obtained:

$$Z\left[f^*(\omega)\right] = z_T + \frac{2^{-\frac{\beta}{\pi}}R(q_\infty/a_0)}{\sqrt{\lambda}}e^{-i\alpha}\int_{-\omega_0}^{\omega} L^*(\omega')e^{i\Theta\left[f^*(\omega')\right]}\,d\omega' \tag{A34}$$

where

$$L^*(\omega) = \left|\sin\frac{\omega+\omega_0}{2}\right|^{1-\frac{\beta}{\pi}}\left[e^{-h^*(\omega)} - \lambda 2^{2+\frac{2\beta}{\pi}}\left|\sin\frac{\omega+\omega_0}{2}\right|^{\frac{2\beta}{\pi}}\cos^2\frac{\omega-\omega_0}{2}\,e^{h^*(\omega)}\right] \tag{A35}$$

Differentiation of equation (A35) with respect to ω, together with equation (A1), yields the relation

$$\frac{S}{2\pi}f'(\omega) = \frac{2^{-\frac{\beta}{\pi}}R(q_\infty/a_0)}{\sqrt{\lambda}}L^*(\omega) \tag{A36}$$

Integration of this equation from $\omega = -\omega_0$ to $\omega = 2\pi - \omega_0$, taking into account equations (5), leads to

$$R = \frac{\sqrt{\lambda}\,S}{2^{-\frac{\beta}{\pi}}(q_\infty/a_0)\displaystyle\int_{-\omega_0}^{2\pi-\omega_0} L^*(\omega')\,d\omega'} \tag{A37}$$

If this expression is introduced into equation (A18), it follows that

$$\Gamma = -a_0 \frac{2^{2+\frac{\beta}{\pi}} \pi\sqrt{\lambda}\, S \sin \omega_0}{\int_{-\omega_0}^{2\pi-\omega_0} L^*(\omega)\, d\omega} \tag{A38}$$

It is easy to verify that this is equivalent to equation (14).

6. The Integral Equation

If R in equation (A36) is replaced by its value from equation (A37) and the resulting equation is integrated from $-\omega_0$ to a variable upper limit ω, it is seen that

$$f^*(\omega) = 2\pi \frac{\int_{-\omega_0}^{\omega} L^*(\omega')\, d\omega'}{\int_{-\omega_0}^{2\pi-\omega_0} L^*(\omega')\, d\omega'} \tag{A39}$$

Since L^* is given by equations (A29), (A31), and (A35), this is an integral equation for the function $f^*(\omega)$. Furthermore, since $f(\omega) = f^*(\omega - \omega_0)$, equation (A39) is identical with equation (15).

It remains to be shown that the solution of the integral equation is equivalent to the solution of the original boundary-value problem. To verify this, assume that an increasing function $f^*(\omega)$ satisfying equation (A39) (for given values of λ and ω_0) is given. With this function define $G(\zeta)$ by means of equations (A17), (A18), and (A37). From the way the integral equation was set up, it follows that there exists an analytic function $w^*(\zeta)$ regular for $|\zeta| > R$ and satisfying the equation

$$w^*\left(Re^{i\omega}\right) = \tilde{q}^*\left[f^*(\omega)\right]e^{-i\tilde{\theta}\left[f^*(\omega)\right]}, \quad w^*(\infty) = \sqrt{\lambda} \tag{A40}$$

where $\tilde{q}^*$ is given by equation (A30) and $\tilde{\theta}$ by equation (A21). With these functions, G and w^*, form the mapping function, equation (A33). This function maps $|\zeta| = R$ in a one-to-one way onto the profile P. Hence

$$\oint dz = 0$$

if the integration is performed along $|\zeta| = R$. By Cauchy's theorem the same is true for any simple closed curve in $|\zeta| \geq R$. Hence equation (A33) defines a one-valued transformation from the ζ-plane to the z-plane. Next,

$$\frac{\partial x}{\partial \xi} + i\frac{\partial y}{\partial \xi} = \frac{\partial z}{\partial \zeta} + \frac{\partial z}{\partial \bar{\zeta}} = \frac{1}{2}\frac{G'}{w^*} - \frac{1}{2}\overline{G'w^*}$$

$$\frac{\partial x}{\partial \eta} + i\frac{\partial y}{\partial \eta} = i\frac{\partial z}{\partial \zeta} - i\frac{\partial z}{\partial \zeta} = i\left(\frac{1}{2}\frac{G'}{w^*} + \frac{1}{2}\overline{G'w^*}\right)$$

Thus as $\zeta \rightarrow \infty$

$$\frac{\partial x}{\partial \xi} \rightarrow \frac{q_\infty}{a_0}\frac{1}{2}\left(\frac{1}{\sqrt{\lambda}} - \sqrt{\lambda}\right)$$

$$\frac{\partial y}{\partial \xi} \rightarrow 0$$

$$\frac{\partial x}{\partial \eta} \rightarrow 0$$

$$\frac{\partial y}{\partial \eta} \rightarrow \frac{q_\infty}{a_0}\frac{1}{2}\left(\sqrt{\lambda} + \frac{1}{\sqrt{\lambda}}\right)$$

By equation (8) this is equivalent to

$$\frac{\partial x}{\partial \xi} \rightarrow 1 \qquad \frac{\partial x}{\partial \eta} \rightarrow 0$$

$$\frac{\partial y}{\partial \xi} \rightarrow 0 \qquad \frac{\partial y}{\partial \eta} \rightarrow c > 0$$

as $\zeta \rightarrow \infty$. It follows that $\zeta = \infty$ is taken into $z = \infty$. Finally the Jacobian of the transformation

$$J = \frac{\partial(x,y)}{\partial(\xi,\eta)} = \frac{\partial(z,\bar{z})}{\partial(\zeta,\bar{\zeta})}$$

is equal to

$$J = \frac{1}{4}\left|G'(\zeta)\right|^2\left(\frac{1}{|w^*|^2} - |w^*|^2\right) \tag{A41}$$

Since it was assumed that $f^{*\prime}(\omega) \geq 0$, it follows from equation (A39) that $L^*(\omega) \geq 0$, so that by equations (A30) and (A35) $|\tilde{q}^*| \leq 1$. By the maximum modulus principle, and by equation (A40), this implies that $|w^*| < 1$ for $|\zeta| > R$, so that

$$J > 0 \quad \text{for} \quad |\zeta| > R$$

The preceding statements contain the result that equation (A33) gives a one-to-one mapping of $|\zeta| > R$ onto $E(P)$, taking $|\zeta| = R$ into P and $\zeta = \infty$ into $z = \infty$. Therefore the functions ϕ and w^* may be considered as functions of x and y, defined in the domain $E(P)$. Now, by equations (A33) and (A13),

$$\left.\begin{aligned} \phi &= \text{Re } G(\zeta) \\ x &= \text{Re } H(\zeta) \\ y &= \text{Re } K(\zeta) \end{aligned}\right\} \tag{A42}$$

where

$$\left.\begin{aligned} H &= \frac{1}{2}\int G'\left(\frac{1}{w^*} - w^*\right) d\zeta \\ K &= -\frac{i}{2}\int G'\left(\frac{1}{w^*} + w^*\right) d\zeta \end{aligned}\right\} \tag{A43}$$

Hence

$$\left(\frac{dG}{d\zeta}\right)^2 + \left(\frac{dH}{d\zeta}\right)^2 + \left(\frac{dK}{d\zeta}\right)^2 = 0 \tag{A44}$$

By use of a classical theorem by Weierstrass, it may be concluded from this relation that in the z-plane ϕ satisfies the minimal surface equation (i.e., is the velocity potential of a compressible flow). Next,

$$u - iv = a_0\left(\frac{\partial\phi}{\partial x} - i\frac{\partial\phi}{\partial y}\right) = 2a_0\frac{\partial\phi}{\partial z}$$

$$= 2a_0\left(\frac{\partial\phi}{\partial\zeta}\frac{\partial\zeta}{\partial z} + \frac{\partial\phi}{\partial\bar{\zeta}}\frac{\partial\bar{\zeta}}{\partial z}\right) \tag{A45}$$

Using equation (A33) and the expression (A41) for the Jacobian, it is easily seen that

$$\left.\begin{aligned}\frac{\partial\zeta}{\partial z} &= \frac{2}{1 - |w^*|^4}\frac{w^*}{G'}\\ \frac{\partial\bar{\zeta}}{\partial z} &= \frac{2}{1 - |w^*|^4}\frac{w^{*2}\bar{w}^*}{\bar{G}'}\end{aligned}\right\} \tag{A46}$$

On the other hand,

$$\left.\begin{aligned}\frac{\partial\phi}{\partial\zeta} &= \frac{1}{2}G'\\ \frac{\partial\phi}{\partial\bar{\zeta}} &= \frac{1}{2}\bar{G}'\end{aligned}\right\} \tag{A47}$$

so that by equations (A45) to (A47)

$$u - iv = a_0\frac{2w^*}{1 - |w^*|^2}$$

Comparing the last expression with equations (A10) and (A11), it is seen that w^* is the "distorted velocity" of the compressible flow generated by ϕ. Now equation (A40) shows that ϕ satisfies the required conditions on the profile P and at infinity.

REFERENCES

1. Chaplygin, S. A.: On Gas Jets. Scientific Memoirs, Moscow Univ., Math. Phys. Sec., vol. 21, 1902, pp. 1–121. (Eng. translation published by Brown Univ., 1944; also NACA TM 1063, 1944.)

2. Demtchenko, B.: Quelques problèmes d'hydrodynamique bidimensionnelle des fluides compressibles. Pub. sci. et tech. du Ministère de l'air, no. 144, 1939, pp. 1–40.

3. Von Kármán, Th.: Compressibility Effects in Aerodynamics. Jour. Aero. Sci., vol. 8, no. 9, July 1941, pp. 337–356.

4. Tsien, Hsue-Shen: Two-Dimensional Subsonic Flow of Compressible Fluids. Jour. Aero. Sci., vol. 6, no. 10, Aug. 1939, pp. 399–407.

5. Bers, Lipman: On a Method of Constructing Two-Dimensional Subsonic Compressible Flows around Closed Profiles. NACA TN 969, 1945.

6. Gelbart, Abe: On Subsonic Compressible Flows by a Method of Correspondence. I – Methods for Obtaining Subsonic Circulatory Compressible Flows about Two-Dimensional Bodies. NACA TN 1170, 1947.

7. Lin, C. C.: On an Extension of the Von Kármán-Tsien Method to Two-Dimensional Subsonic Flows with Circulation around Closed Profiles. Quart. Appl. Math., vol. IV, no. 3, Oct. 1946, pp. 291–297.

8. Bers, Lipman: Velocity Distribution on Wing Sections of Arbitrary Shape in Compressible Potential Flow. I – Symmetric Flows Obeying the Simplified Density-Speed Relation. NACA TN 1006, 1946.

9. Bers, Lipman: Velocity Distribution on Wing Sections of Arbitrary Shape in Compressible Potential Flow. II – Subsonic Symmetric Adiabatic Flows. NACA TN 1012, 1946.

10. Gelbart, Abe, and Resch, Daniel: A Method of Computing Subsonic Flows around Given Airfoils. NACA TN 2057, 1950.

11. Saltzer, Charles: A Remark on the Rectification of the Joukowski Profile. Quart. Appl. Math., vol. IV, no. 2, July 1946, pp. 196–199.

12. Bateman, H.: Partial Differential Equations of Mathematical Physics. The Univ. Press (Cambridge, England), 1932.

TABLE 1.– SUCCESSIVE APPROXIMATIONS TO THE FUNCTION $f(\omega)$

[Joukowski profile, $\epsilon = 0.15$, $M_\infty = 0.685$, $\lambda = 0.157$, $\omega_1 = \pi$, $\sigma_1 = 3.122$]

ω		$f(\omega)$									
(deg)	(radians)	$f_0(\omega)$	$f_1(\omega)$	$f_2(\omega)$	$f_3(\omega)$	$f_4(\omega)$	$f_5(\omega)$	$f_6(\omega)$	$f_7(\omega)$	$f_8(\omega)$	$f_9(\omega)$
0	0.000	0.000	0.000	0.000	0.000	0.000	0.000	0.000	0.000	0.000	0.000
10	.175	.032	.031	.034	.032	.032	.033	.032	.032	.032	.032
20	.349	.128	.126	.134	.128	.127	.129	.127	.127	.127	.127
30	.524	.279	.277	.293	.279	.279	.281	.279	.279	.279	.279
40	.698	.476	.474	.501	.477	.477	.479	.477	.477	.477	.477
50	.873	.708	.706	.745	.708	.710	.711	.710	.710	.710	.710
60	1.047	.962	.960	1.011	.960	.965	.965	.965	.965	.965	.965
70	1.222	1.227	1.225	1.287	1.221	1.232	1.230	1.231	1.231	1.231	1.231
80	1.396	1.493	1.491	1.562	1.482	1.499	1.495	1.498	1.497	1.497	1.497
90	1.571	1.751	1.749	1.826	1.734	1.758	1.751	1.756	1.754	1.755	1.755
100	1.745	1.994	1.992	2.072	1.971	2.010	1.991	1.999	1.996	1.997	1.997
110	1.920	2.218	2.216	2.295	2.189	2.242	2.211	2.223	2.218	2.220	2.219
120	2.094	2.420	2.418	2.491	2.385	2.442	2.408	2.423	2.416	2.419	2.418
130	2.269	2.597	2.595	2.658	2.558	2.618	2.580	2.599	2.590	2.594	2.592
140	2.444	2.750	2.743	2.797	2.707	2.768	2.727	2.749	2.738	2.744	2.741
150	2.618	2.878	2.867	2.910	2.835	2.890	2.851	2.874	2.862	2.869	2.865
160	2.793	2.983	2.968	2.997	2.945	2.987	2.955	2.976	2.964	2.971	2.967
170	2.967	3.069	3.051	3.064	3.040	3.061	3.044	3.056	3.048	3.053	3.050
180	3.142	3.142	3.122	3.122	3.122	3.122	3.122	3.122	3.122	3.122	3.122
190	3.316	3.215	3.195	3.191	3.198	3.191	3.198	3.192	3.196	3.193	3.195
200	3.491	3.300	3.282	3.286	3.278	3.280	3.282	3.278	3.282	3.279	3.281
210	3.665	3.405	3.388	3.409	3.376	3.392	3.386	3.387	3.388	3.387	3.387
220	3.840	3.534	3.515	3.560	3.496	3.527	3.514	3.519	3.517	3.518	3.518
230	4.014	3.686	3.668	3.737	3.642	3.685	3.668	3.675	3.672	3.674	3.673
240	4.189	3.863	3.849	3.939	3.819	3.866	3.848	3.856	3.852	3.854	3.853
250	4.363	4.065	4.055	4.166	4.023	4.070	4.052	4.060	4.056	4.058	4.057
260	4.538	4.289	4.282	4.415	4.251	4.295	4.278	4.286	4.282	4.285	4.283
270	4.712	4.532	4.528	4.682	4.500	4.538	4.524	4.531	4.527	4.530	4.528
280	4.887	4.790	4.787	4.962	4.765	4.796	4.784	4.790	4.786	4.789	4.787
290	5.062	5.056	5.055	5.249	5.039	5.061	5.052	5.056	5.053	5.055	5.054
300	5.236	5.321	5.321	5.533	5.311	5.325	5.318	5.321	5.319	5.321	5.320
310	5.411	5.575	5.576	5.669	5.571	5.578	5.574	5.576	5.574	5.576	5.575
320	5.585	5.807	5.808	5.779	5.805	5.809	5.806	5.807	5.807	5.808	5.807
330	5.760	6.005	6.006	5.989	6.003	6.006	6.004	6.005	6.004	6.005	6.005
340	6.934	6.156	6.158	6.149	6.156	6.157	6.156	6.156	6.156	6.156	6.156
350	6.109	6.251	6.252	6.249	6.251	6.251	6.251	6.251	6.251	6.251	6.251
360	6.283	6.283	6.283	6.283	6.283	6.283	6.283	6.283	6.283	6.283	6.283
ω_0		-----	0° 30'	5° 52'	1° 37'	4° 47'	2° 42'	3° 52'	3° 17'	3° 37'	3° 27'

TABLE 2.– VELOCITY DISTRIBUTION

[Joukowski profile, $\epsilon = 0.15$, $M_\infty = 0.685$, $\lambda = 0.157$, $\omega_1 = \pi$, $\sigma_1 = 3.122$]

δ \ q/q_∞	By present method	For incompressible fluid	By Kármán–Tsien method
0	0.884	0.869	0.831
10	.849	.876	.840
20	.856	.893	.860
30	.888	.919	.893
40	.932	.952	.935
50	.984	.993	.990
60	1.047	1.040	1.056
70	1.121	1.092	1.132
80	1.204	1.148	1.220
90	1.295	1.205	1.316
100	1.392	1.263	1.421
110	1.492	1.319	1.529
120	1.589	1.372	1.641
130	1.672	1.415	1.739
140	1.715	1.445	1.812
150	1.675	1.445	1.812
160	1.464	1.373	1.644
170	.994	1.098	1.141
180	.457	.070	.059
190	.299	.377	.325
200	.760	.837	.793
210	1.034	1.047	1.066
220	1.180	1.141	1.209
230	1.244	1.177	1.268
240	1.255	1.182	1.277
250	1.235	1.167	1.251
260	1.194	1.141	1.208
270	1.143	1.106	1.155
280	1.088	1.068	1.097
290	1.033	1.028	1.039
300	.981	.990	.986
310	.935	.954	.938
320	.895	.923	.898
330	.863	.898	.866
340	.839	.880	.844
350	.839	.870	.832
360	.884	.869	.831

NACA

TABLE 3.- VELOCITY DISTRIBUTION; CORRECTION

TO TABLE IIIb, REFERENCE 8

[Joukowski profile, $\epsilon = 0.15$, $M_\infty = 0.685$, $\alpha = 0$]

δ \ q/q_∞	By present method	By Kármán-Tsien method	By Kaplan method	For incompressible fluid
0		0.832	0.839	0.870
10	0.835	.837	.852	.874
20	.847	.853	.867	.887
30	.873	.881	.892	.909
40	.912	.918	.927	.938
50	.957	.965	.970	.974
60	1.011	1.022	1.021	1.016
70	1.073	1.086	1.078	1.061
80	1.142	1.159	1.139	1.109
90	1.215	1.235	1.203	1.157
100	1.289	1.312	1.265	1.203
110	1.360	1.385	1.322	1.244
120	1.417	1.449	1.368	1.278
130	1.446	1.486	1.394	1.297
140	1.427	1.480	1.385	1.294
150	1.325	1.391	1.312	1.247
160	1.088	1.154	1.110	1.106
170	.645	.680	.674	.738
180	.000	.000	.000	.000

NACA

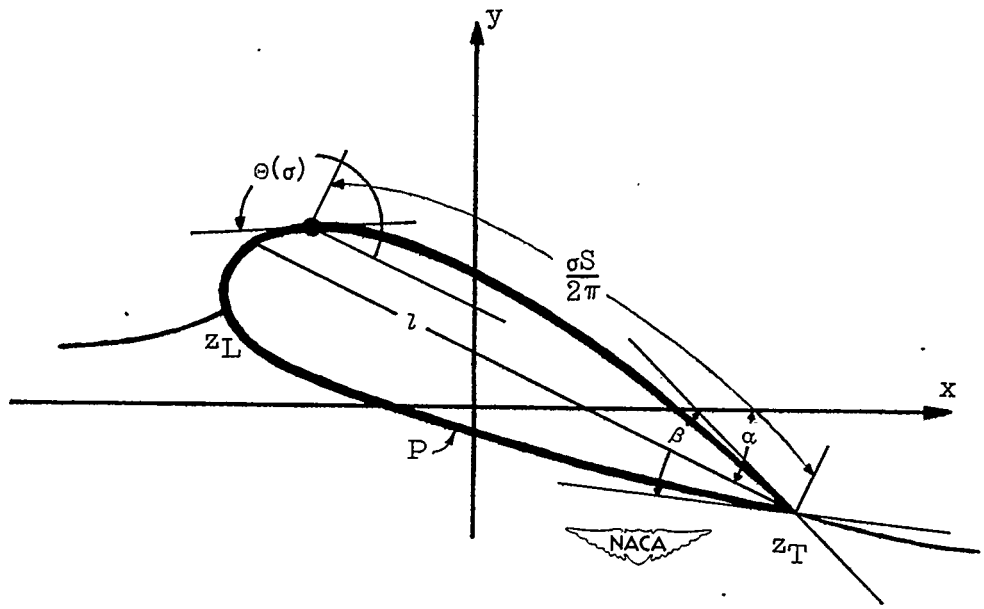

Figure 1.- Relationships in z-plane.

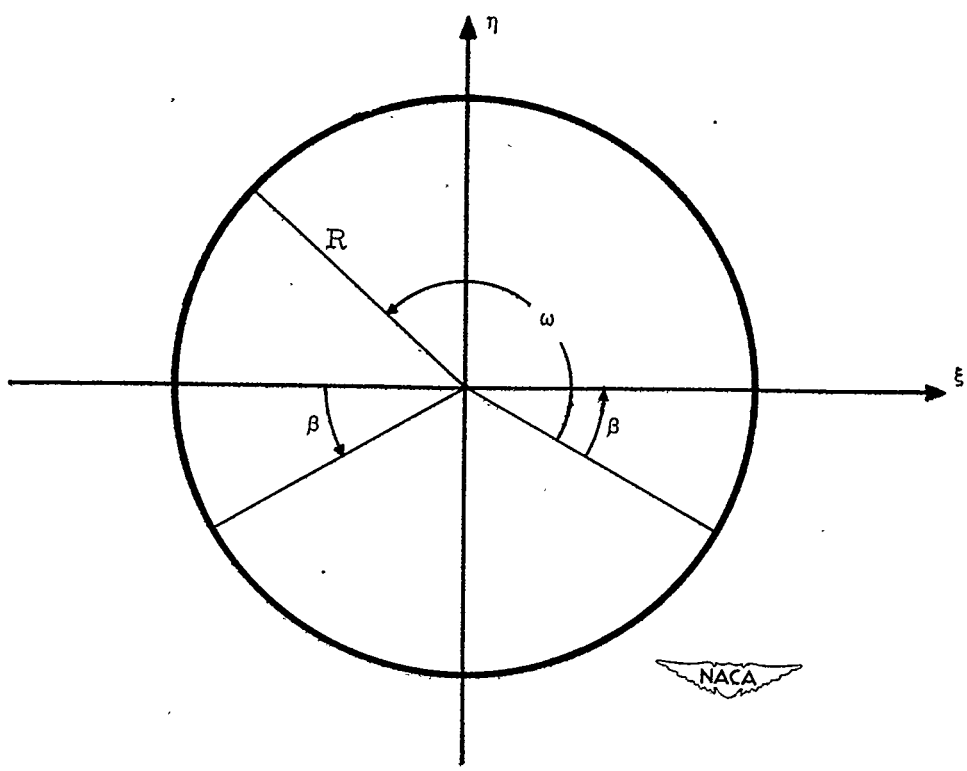

Figure 2.- Relationships in ζ-plane.

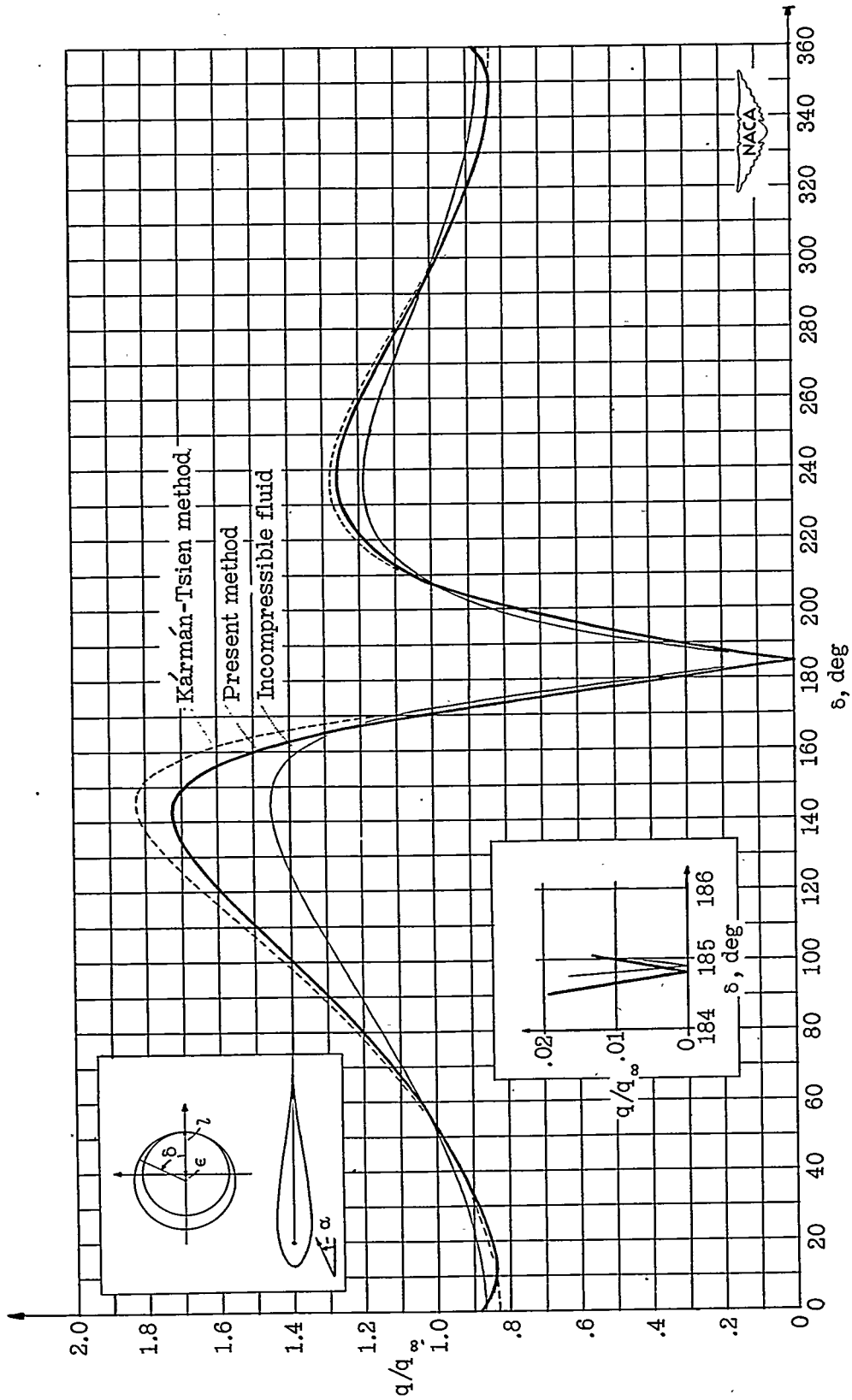

Figure 3.- Velocity distribution along a Joukowski profile. $\epsilon = 0.15$, $\alpha = 2^{\circ}\ 27'$, $M_{\infty} = 0.685$.