NACA TN 2147 8573

TECH LIBRARY KAFB, NM
0065093

NATIONAL ADVISORY COMMITTEE FOR AERONAUTICS

TECHNICAL NOTE 2147

SOME CONICAL AND QUASI-CONICAL FLOWS IN LINEARIZED SUPERSONIC-WING THEORY

By Herbert S. Ribner

Lewis Flight Propulsion Laboratory
Cleveland, Ohio

Washington
August 1950

TECH LIBRARY KAFB, NM

0065093

NATIONAL ADVISORY COMMITTEE FOR AERONAUTICS

TECHNICAL NOTE 2147

1317

SOME CONICAL AND QUASI-CONICAL FLOWS IN LINEARIZED SUPERSONIC-WING THEORY

By Herbert S. Ribner

SUMMARY

A number of conical and quasi-conical linearized supersonic flows have been derived. These flows may be applied in lift-cancellation techniques in the determination of wing-lift disturbances that arise at subsonic trailing edges. Some of the results are applied to damping in roll and pitch in another paper.

Two methods of analysis have been employed, both involving integral equations. One is a development of the membrane method of Evvard; the other is an analog of the superposition method of Schlichting. In both cases, source distributions are used. The mathematical equivalence of the first method and a new doublet-distribution method of Goodman and Mirels is shown.

INTRODUCTION

The analysis of the flow over a sweptback wing (reference 1) makes use of Lagerstrom's concept of lift cancellation (reference 2). The starting point is a delta wing of infinite chord. Suitable flows are superimposed that cancel the lift outboard of and behind a certain boundary. This boundary is chosen to constitute the tips and the trailing edge of the sweptback wing.

The cancellation flows for the wing tip modify the lift in the tip region; they are not of concern herein. The cancellation flows for the trailing edge modify the lift in a region ahead of the trailing edge if the edge is "subsonic"(that is, if the component stream velocity normal to the edge is subsonic). Now the lift distribution of a delta wing at an angle of attack is substantially flat in the center. (See fig. 1.) Thus, an approximate cancellation behind the trailing edge would be afforded by a constant lift such as flow I in the figure. (This idea was originated in reference 1.) Corresponding approximate cancellation flows (III and IV) for rolling and pitching motions are also shown in the figure. The derivation of

these three flows is the main object of this report; the work was initiated at the NACA Langley laboratory and completed at the NACA Lewis laboratory.

1317

The analysis leads to integral equations, some with several apparent solutions. The choice of the physically correct solution in each case is determined by comparison with the solution for a closely related flow that is more easily calculated. Thus, altogether, derivations are given for eight flow distributions. Four of these flows are conical: the velocity components and pressure are constant along any ray from the vertex. The remaining four are quasi-conical: the velocity components and pressure are proportional to the distance along any ray.

The practical application of several of these cancellation flows in the evaluation of damping in roll and pitch is made in reference 3.

CANCELLATION FLOWS

Each of the eight flows discussed can be considered to represent a slightly cambered lifting surface lying essentially in the $z = 0$ plane. (All symbols are defined in appendix A.) Thus, the u and v velocities are antisymmetric with respect to the $z = 0$ plane, and the w velocity is symmetric. With these reservations, the boundary conditions can be specified for the upper surface only. (This simplification is employed throughout the report.)

The flows contemplated for the partial cancellation of the lift behind the trailing edge are schematically designated in figure 2 for the several cases. A particular cancellation flow (any one of I to IV, fig. 2) is superposed on the sweptback wing so that the $w = 0$ regions lie ahead of the trailing edge and the shaded region lies behind. The lift, and hence the u velocity, is specified in the shaded region, and this specification determines the lift cancellation. (See fig. 1.) The specification $w = 0$ for the part of the flow overlapping the wing ensures that the resultant flow shall be tangent to the surface of the wing; the basic delta-wing flow already provides the correct value of upwash w on the wing (for example, $-\alpha V$ for angle of attack) and the cancellation flow must therefore add none.

The u velocity of the cancellation flow in the regions $w = 0$ is algebraically additive to that of the basic delta flow there. This additive u velocity corresponds to a pressure disturbance caused

by the wing trailing edge. The central problem of this report is the determination of the u velocity for each of the cancellation flows I to IV from the boundary conditions stated in the preceding paragraph.

In the integral-equation method of solution as applied herein, several solutions may be found for certain of the integral equations. Unique solutions can be obtained in each case, however, for a flow that is closely related to the desired flow. The correct solution for the desired flow may be identified by a comparison of the nature and the location of singularities in the two flows. The identification is made more convincing by a quantitative comparison of the u velocity over the region of interest in addition to a consideration of the singularities.

Thus in figure 2 flows I to IV are the desired flows and flows I' to IV' are the respective related flows. The boundary conditions for the desired and related flows differ only in the presence or absence of a left-hand $w = 0$ region. Because of the relative remoteness of the left-hand region, conditions in this region may be expected to affect but slightly the u velocity induced in the right-hand $w = 0$ region, so long as that region is relatively narrow. With this limitation the u velocity in the right-hand $w = 0$ region calculated for flow I', then, is presumed to be a good approximation to that for flow I, and similarly for the other pairs of flows.

It will be convenient to obtain first the solutions for the related flows I' to IV' so that they will be available to aid in identifying the correct solutions for flows I to IV, respectively. Flows I' to IV' require only a simple inversion of an Abel-type integral equation. Flows I to IV require a more elaborate procedure.

Flow I'
(For Angle of Attack)

In flow I' (fig. 3) the w velocity (or surface slope) is prescribed in region A, but not the u velocity (or lift). The u velocity is prescribed in region B, but not the w velocity. If the w velocity were known in region B, this wing would be of prescribed camber. According to Puckett (reference 4), the wing could be represented by a distribution of sources in proportion to the local value of w. The unknown u velocity in region A could then be obtained by simple integration and differentiation. The source representation can still be used, however, even though the distribution of w in region B is unknown. In this case the prescribed conditon on u in region B will give rise to a soluble

integral equation for the unknown w distribution. This procedure is a development of Evvard's method (reference 5). The details follow.

The surface u velocity is given in reference 5, equation (3a). In slightly modified form, and in the present notation, it is

$$u(\xi,\eta) = -\frac{1}{\pi M}\iint_S \frac{\left(\frac{\partial w}{\partial x_1}\right) d\xi_1\, d\eta_1}{\sqrt{(\xi-\xi_1)(\eta-\eta_1)}} - \frac{1}{2\pi\beta}\int_C \frac{\Delta w(d\eta_1 - d\xi_1)}{\sqrt{(\xi-\xi_1)(\eta-\eta_1)}} \tag{1}$$

The oblique coordinates of reference 5 (Mach coordinates) are employed. (See fig. 3.) Unsubscripted values refer to the field point, subscripted values to the source point. The transformations relating (x,y) and (ξ,η) are

$$\left.\begin{aligned} x &= \frac{\beta}{M}(\eta+\xi) & \xi &= \frac{M}{2\beta}(x-\beta y) \\ \beta y &= \frac{\beta}{M}(\eta-\xi) & \eta &= \frac{M}{2\beta}(x+\beta y) \end{aligned}\right\} \tag{2}$$

The surface integral is taken over the area S bounded by the forward Mach cone from the point (ξ,η). The line integral is taken along any lines within S or bounding S across which the w velocity experiences a jump Δw. The ξ-axis and the line $\eta = \tau\xi$ (fig. 3) might be such lines. Consider, however, the requirement of general similarity with flow I. The imposition of the Kutta condition at the trailing edge of the wing in figure 1 requires the continuity of w across the boundaries $\eta = \tau\xi$ and $\xi = \tau\eta$ of the shaded region of flow I, as sketched in figure 2. For flow I', w must similarly be continuous along the right-hand edge of the shaded region $(\eta = \tau\xi)$. Also, the continuity of w across the ξ-axis (Mach line) can be shown to be a consequence of the finite lift along that line. The line integral in equation (1) accordingly vanishes for flow I'.

Let the point (ξ,η) be located at P (fig. 3); P represents an arbitary point in region B. Then the forward Mach cone includes the shaded area in region B and an adjacent unshaded area in region A. The quantity $\partial w/\partial x_1 = 0$ in region A; therefore, only the shaded area contributes to the surface integral. Equation (1) may thus be written

1317

$$u(\xi,\eta) = -\frac{1}{\pi M}\int_0^{\eta}\frac{d\eta_1}{\sqrt{\eta-\eta_1}}\int_{\eta_1/\tau}^{\xi}\frac{\left(\frac{\partial w}{\partial x_1}\right)d\xi_1}{\sqrt{\xi-\xi_1}} \quad \text{region B} \tag{3}$$

The unknown inner integral, multiplied by $1/\pi M$, may be designated $J(\xi,\eta_1)$, which gives

$$u(\xi,\eta) = -\int_0^{\eta}\frac{J(\xi,\eta_1)d\eta_1}{\sqrt{\eta-\eta_1}} \quad \text{region B} \tag{4}$$

Equation (4) is an Abel-type integral equation for the unknown function $J(\xi,\eta_1)$. Its solution is given (reference 6) by

$$J(\xi,\eta_1) = -\frac{1}{\pi}\frac{\partial}{\partial\eta_1}\int_0^{\eta_1}\frac{u(\xi,\eta)d\eta}{\sqrt{\eta_1-\eta}} \tag{5}$$

(The more general treatment of Abel's integral equation in reference 7 implies that equation (5) will provide singular as well as continuous solutions. The only important restriction is that $u(\xi,\eta)$ must be such that the integral on the right-hand side of equation (5) is continuous. In reference 6, however, certain additional restrictions are placed on $u(\xi,\eta)$ to limit equation (5) to continuous solutions. In the present report, these additional restrictions are disregarded and singular solutions may be expected, as in equation (6).)

In the present case the function $u(\xi,\eta)$ is a constant u_0 (fig. 3). The solution for J is therefore

$$J(\xi,\eta_1) = \frac{-u_0}{\pi\sqrt{\eta_1}} \tag{6}$$

Now let the general point (ξ,η) be located in region A at Q (fig. 3). The only change in the expression for u

(equation (3)) is in the upper limit for η_1. This upper limit is now at the intersection of the line PQ with the line $\eta = \tau\xi$. Accordingly,

1317

$$u(\xi,\eta) = -\int_0^{\tau\xi} \frac{J(\xi,\eta_1)d\eta_1}{\sqrt{\eta-\eta_1}} \quad \text{region A} \tag{7}$$

The value of J already obtained in equation (6) applies here as well as in equation (4). Upon making the substitution,

$$u(\xi,\eta) = \frac{u_0}{\pi}\int_0^{\tau\xi} \frac{d\eta_1}{\sqrt{\eta\eta_1-\eta_1^2}}$$

$$= \frac{2u_0}{\pi}\sin^{-1}\sqrt{\frac{\tau\xi}{\eta}} \quad \text{region A} \tag{8}$$

It will be convenient to reexpress the result of equation (8) in terms of the conical coordinate $\sigma = \beta y/x$. Along the line $\eta = \tau\xi$, the coordinate σ is given the value n. The transformation

$$\left.\begin{aligned} \xi &= \frac{M}{2\beta}x(1-\sigma) \\ \eta &= \frac{M}{2\beta}x(1+\sigma) \\ \tau &= \frac{1+n}{1-n} \end{aligned}\right\} \tag{9}$$

then yields

$$u(\sigma) = \frac{2u_0}{\pi}\sin^{-1}\sqrt{\frac{(1+n)(1-\sigma)}{(1-n)(1+\sigma)}} \quad (n \leq \sigma \leq 1) \tag{10}$$

Equation (10) gives the hitherto unknown u velocity in region A of figure 3. The w velocity in region B is still unknown. This

1317

w velocity will not be needed in the present investigation, but the method of solution is given in appendix B as a matter of interest.

Flow II'
(Special)

The development leading to equation (5) in the treatment of flow I' leaves the boundary condition on u as yet unspecified. The development and the equation are thus sufficiently general to be applied to any of the flows I' to IV'.

The present case is complicated by discontinuity in the u velocity across the x-axis (fig. 4). The point $P = (\xi,\eta)$ may lie in either of the regions B_1 or B_2. The corresponding solutions for $J(\xi,\eta_1)$ from equation (5) will be different; call them $J_1(\xi,\eta_1)$ and $J_2(\xi,\eta_1)$, respectively. The conditions on $u(\xi,\eta)$ are

$$u(\xi,\eta) = -u_0 \qquad 0 < \eta < \xi \quad \text{region } B_1$$

$$u(\xi,\eta) = u_0 \qquad \xi < \eta < \tau\xi \quad \text{region } B_2$$

Then

$$J_1(\xi,\eta_1) = -\frac{1}{\pi}\frac{\partial}{\partial\eta_1}\int_0^{\eta_1}\frac{-u_0 d\eta}{\sqrt{\eta_1-\eta}}$$

$$J_2(\xi,\eta_1) = -\frac{1}{\pi}\frac{\partial}{\partial\eta_1}\left(\int_0^{\xi}\frac{-u_0 d\eta}{\sqrt{\eta_1-\eta}} + \int_{\xi}^{\eta_1}\frac{u_0 d\eta}{\sqrt{\eta_1-\eta}}\right)$$

The results are

$$\left.\begin{aligned} J_1(\xi,\eta_1) &= \frac{u_0}{\pi\sqrt{\eta_1}} \\ J_2(\xi,\eta_1) &= \frac{u_0}{\pi}\left(\frac{1}{\sqrt{\eta_1}} - \frac{2}{\sqrt{\eta_1-\xi}}\right) \end{aligned}\right\} \tag{11}$$

1317

Equation (7) is, like equation (5), applicable to any of the flows I' to IV'. For flow II' the appropriate function $J(\xi,\eta_1)$ is $J_1(\xi,\eta_1)$ in the range $0 < \eta < \xi$ and $J_2(\xi,\eta_1)$ in the range $\xi < \eta < \tau\xi$. Therefore

$$\begin{aligned} u(\xi,\eta) &= -\int_0^{\xi} \frac{J_1(\xi,\eta_1)d\eta_1}{\sqrt{\eta-\eta_1}} - \int_{\xi}^{\tau\xi} \frac{J_2(\xi,\eta_1)d\eta_1}{\sqrt{\eta-\eta_1}} \\ &= \frac{u_0}{\pi}\left[-\int_0^{\tau\xi} \frac{d\eta_1}{\sqrt{\eta\eta_1-\eta_1^2}} + 2\int_{\xi}^{\tau\xi} \frac{d\eta_1}{\sqrt{(\eta-\eta_1)(\eta_1-\xi)}}\right] \\ &= \frac{2u_0}{\pi}\left[\pi - \cos^{-1}\frac{(2\tau-1)\xi-\eta}{\eta-\xi} - \sin^{-1}\sqrt{\frac{\tau\xi}{\eta}}\right] \quad \text{region A} \end{aligned}$$

In terms of the conical coordinate $\sigma = \beta y/x$ this equation is, after the transformation equations (9) are applied,

$$u(\sigma) = \frac{2u_0}{\pi}\left[\pi - \cos^{-1}\frac{2n-\sigma(1+n)}{\sigma(1-n)} - \sin^{-1}\sqrt{\frac{(1+n)(1-\sigma)}{(1-n)(1+\sigma)}}\right] \tag{12}$$

1317

Equation (12) gives the u velocity in the $w = 0$ sector $(n \leq \sigma \leq 1)$ of flow II' (fig. 1), which is zone A of figure 4.

Flow III'

The appropriate value of u to be substituted in equation (5) is, from figure 2,

$$u = \kappa y$$

or

$$u = \frac{\kappa}{M}(\eta - \xi)$$

so that

$$J(\xi,\eta_1) = -\frac{\kappa}{\pi M}\frac{\partial}{\partial \eta_1}\int_0^{\eta_1}\frac{(\eta-\xi)d\eta}{\sqrt{\eta_1-\eta}}$$

$$= -\frac{\kappa}{\pi M}\frac{2\eta_1-\xi}{\sqrt{\eta_1}} \tag{13}$$

Insertion of this value into equation (7) gives

$$u(\xi,\eta) = \frac{\kappa}{\pi M}\int_0^{\tau\xi}\frac{(2\eta_1-\xi)d\eta_1}{\sqrt{\eta_1(\eta-\eta_1)}} \qquad (\eta \geq \tau\xi) \tag{14}$$

which integrates to

$$u(\xi,\eta) = \frac{2\kappa}{\pi M}\left[(\eta-\xi)\sin^{-1}\sqrt{\frac{\tau\xi}{\eta}} - \sqrt{\tau\xi(\eta-\tau\xi)}\right]$$

In terms of the conical coordinate $\sigma = \beta y/x$ this equation is, after the transformation equations (9) are applied,

$$u(\sigma,x) = \frac{\kappa x}{\pi\beta}\left[2\sigma \sin^{-1}\sqrt{\frac{(1+n)(1-\sigma)}{(1-n)(1+\sigma)}} - \frac{\sqrt{2(1+n)(1-\sigma)(\sigma-n)}}{1-n}\right] \tag{15}$$

1317

Equation (15) gives the u velocity in the $w = 0$ sector $(n \leq \sigma \leq 1)$ of flow III' of figure 2.

Flow IV'

Refer to figure 2 for the value of u to be substituted in equation (5):

$$u = \kappa x$$

$$= \frac{\kappa\beta}{M}(\eta+\xi)$$

Thus

$$J(\xi,\eta_1) = -\frac{\kappa\beta}{\pi M}\frac{\partial}{\partial\eta_1}\int_0^{\eta_1}\frac{(\eta+\xi)d\eta}{\sqrt{\eta_1-\eta}}$$

$$= -\frac{\kappa\beta}{\pi M}\frac{2\eta_1+\xi}{\sqrt{\eta_1}} \tag{16}$$

Substitution of this value in equation (7) gives

$$u(\xi,\eta) = \frac{\kappa\beta}{\pi M}\int_0^{\tau\xi}\frac{(2\eta_1+\xi)d\eta_1}{\sqrt{\eta_1(\eta-\eta_1)}} \qquad (\eta \geq \tau\xi)$$

The integration yields

$$u(\xi,\eta) = \frac{2\kappa\beta}{\pi M}\left[(\eta+\xi)\sin^{-1}\sqrt{\frac{\tau\xi}{\eta}} - \sqrt{\tau\xi(\eta-\tau\xi)}\right]$$

1317

In terms of the conical coordinate $\sigma = \beta y/x$ this equation is, after the transformation equations (9) are applied,

$$u(\sigma,x) = \frac{\kappa x}{\pi}\left[2 \sin^{-1}\sqrt{\frac{(1+n)(1-\sigma)}{(1-n)(1+\sigma)}} - \frac{\sqrt{2(1+n)(1-\sigma)(\sigma-n)}}{1-n}\right] \qquad (17)$$

This equation gives the u velocity in the $w = 0$ sector $(n \leq \sigma \leq 1)$ of flow IV' of figure 1.

Flow I
(For Angle of Attack)

Flows I to IV differ from flows I' to IV', respectively, in the specification of a left-hand sector $w = 0$ to match the right-hand sector (fig. 2). The solution can no longer be obtained by the simple inversion of an Abel-type integral equation. Resort is therefore made to a different integral-equation formulation in which advantage is taken of the conical nature of the flow. The method is an analog of the superposition method of Schlichting (reference 8).

According to the considerations developed in the discussion of flow I', flow I may be represented by a suitable source distribution. At every point the required source strength is proportional to the local value of w. Thus the source strength is zero in the two outside sectors. (See fig. 2.) In the central sector w is unknown, but there is a condition on the u velocity. The source distribution there must be so chosen that this condition on the induced u velocity is met. The formulation of this condition gives rise to an integral equation for the unknown source distribution. A convenient form of integral equation is obtained as follows: The source distribution over the region $u = u_0$ is considered to be obtained by superposing uniform sectors of infinitesimal strength and different lateral extent $\pm\sigma_1$. Section A-A of figure 5 illustrates such a distribution. The strength of an elementary sector is given by

$$\Delta w = -\frac{\partial w}{\partial \sigma_1} d\sigma_1 \qquad (\sigma_1 > 0)$$

Each elementary source-sheet sector induces a certain infinitesimal u velocity and the total u velocity is given by the integral. This integral must be equated to the prescribed u velocity shown in figure 5. The result is the desired integral equation for the unknown distribution strength $\partial w/\partial\sigma_1$. 1317

The infinitesimal u velocity induced by an elementary source-sheet sector extending from $-\sigma_1$ to σ_1 can be obtained from reference 4 (equation (31)). In the present notation it is

$$\Delta u(\sigma) = -\frac{\Delta w}{\pi\beta}\frac{\sigma_1}{\sqrt{1-\sigma_1^2}}\left(\cosh^{-1}\frac{1-\sigma_1\sigma}{|\sigma-\sigma_1|} + \cosh^{-1}\frac{1+\sigma_1\sigma}{|\sigma+\sigma_1|}\right) \tag{18}$$

where an absolute value sign has been added to the denominators of the $\cosh^{-1}$ terms. With the absolute value sign, equation (18) applies both for $|\sigma| \leq \sigma_1$ and for $|\sigma| \geq \sigma_1$; whereas in reference 4 the two cases are separately covered in equations (31) and (33), respectively. (The same expression results from the addition of two oppositely swept line sources of the acceleration potential. See reference 9, equation (12).)

The total u velocity induced by the superposed source-sheet sectors is

$$u(\sigma) = \frac{1}{\pi\beta}\int_0^n \frac{\partial w}{\partial\sigma_1}\frac{\sigma_1}{\sqrt{1-\sigma_1^2}}\left(\cosh^{-1}\frac{1-\sigma_1}{|\sigma-\sigma_1|} + \cosh^{-1}\frac{1+\sigma_1}{|\sigma+\sigma_1|}\right)d\sigma_1 \tag{19}$$

If $u(\sigma)$ is put equal to the specified value u_0 in the range $|\sigma| \leq n$, then equation (19) represents an integral equation for the derivative $\partial w(\sigma_1)/\partial\sigma_1$ of the unknown source strength. This equation as it stands is too complex to be useful. Great simplification results, however, upon differentiating both sides with respect to σ:

$$\frac{\partial u}{\partial\sigma} = \frac{2\sigma}{\pi\beta\sqrt{1-\sigma^2}}\int_0^n \frac{\frac{\partial w}{\partial\sigma_1}\sigma_1 d\sigma_1}{\sigma_1^2-\sigma^2} \tag{20}$$

1317

(The Cauchy principal value is to be taken for the integral.) In the range $|\sigma| < n$, $\partial u/\partial\sigma = 0$. The following less formidable integral equation is thus obtained:

$$\int_0^n \frac{\frac{\partial w}{\partial \sigma_1}\sigma_1}{\sigma_1^2-\sigma^2}\,d\sigma_1 = 0 \qquad |\sigma| < n \tag{21}$$

The substitution $t_1 = \sigma_1^2$, $t = \sigma^2$ reduces equation (21) to a special case of

$$\int_a^b \frac{f(t_1)dt_1}{t_1-t} = g(t) \tag{21a}$$

The integral equation (21a) is well known from incompressible thin-airfoil-section theory, but the usual inversions yield only the trivial solution $f(t_1) = 0$ for $g(t) = 0$. A nontrivial solution of equation (21) for $\partial w/\partial\sigma_1$ has been suggested by C. E. Brown of the NACA Langley laboratory. Put

$$\left.\begin{aligned}
\sigma^2 &= \frac{n^2}{2}(1 - \cos\delta) \\
\sigma_1^2 &= \frac{n^2}{2}(1 - \cos\theta) \\
\frac{\partial w}{\partial \sigma_1} &= Cf(\theta) \quad (C = \text{unknown constant})
\end{aligned}\right\} \tag{22}$$

Then equation (21) becomes

$$\int_0^\pi \frac{f(\theta)\sin\theta\,d\theta}{\cos\theta - \cos\delta} = 0 \tag{23}$$

Now according to reference 10

$$\int_0^{\pi} \frac{d\theta}{\cos\theta - \cos\delta} = 0$$

1317

whence a solution of equation (23) is

$$\left.\begin{aligned} f(\theta) &= \csc\theta \\ \text{or} \qquad \frac{\partial w}{\partial \sigma_1} &= C \csc\theta \end{aligned}\right\} \tag{24}$$

The question of uniqueness is deferred until later; in the meantime equation (24) is considered as the physically correct solution.

Equation (24) carries the solution for $\partial w/\partial\sigma_1$ far enough to enable the determination of u. Thus, equation (20) is still valid in the range $n < |\sigma| \leq 1$. In this range $\partial u/\partial\sigma \neq C$, and equation (20) may serve for the evaluation of u. The transformation from σ_1 to θ (equations (22)) is again convenient. (The transformation from σ to δ is not used as it leads to $\cos\delta > 1$.) The result is

$$\frac{\partial u}{\partial\sigma} = -\frac{C\sigma}{\pi\beta\sqrt{1-\sigma^2}} \int_0^{\pi} \frac{f(\theta)\sin\theta\, d\theta}{\frac{2\sigma^2}{n^2} - 1 + \cos\theta} \qquad n < |\sigma| \leq 1$$

and with $f(\theta) = \csc\theta$

$$\frac{\partial u}{\partial\sigma} = -\frac{C\sigma}{\pi\beta\sqrt{1-\sigma^2}} \int_0^{\pi} \frac{d\theta}{\frac{2\sigma^2}{n^2} - 1 + \cos\theta} \qquad n < |\sigma| \leq 1 \tag{25}$$

1317

This integral is evaluated in reference 11 (table 64, equation (12)). The result is

$$\frac{\partial u}{\partial \sigma} = -\frac{Cn^2\sigma}{2\beta\,|\sigma|\sqrt{(1-\sigma^2)(\sigma^2-n^2)}} \qquad n < |\sigma| \leq 1 \tag{26}$$

For purposes of integration, σ may be restricted to the positive range so that $\sigma/|\sigma| = 1$; the resultant integral will be applied for both the positive and the negative value of σ because of the symmetry of the flow in σ. The elliptic-function substitutions of appendix C are helpful in this and other more difficult integrations of the same nature in this report. The integral of equation (26) between the limits σ and 1 is found to be

$$u(\sigma) = \frac{Cn^2}{2\beta} F(\varphi,k)$$

where F is the incomplete elliptic integral of the first kind with modulus

$$k = \sqrt{1-n^2}$$

and amplitude

$$\varphi = \sin^{-1}\sqrt{\frac{1-\sigma^2}{1-n^2}}$$

The constant C is established by the condition that $u(n) = u_0$ so that finally

$$u(\sigma) = u_0 \frac{F(\varphi,k)}{F\left(\frac{\pi}{2},k\right)} \tag{27}$$

Equation (27) is a solution for the u velocity in the outboard sectors $n \leq \sigma \leq 1$ of flow I in figures 2 and 5. Equation (27) is not a unique solution of the integral equation (21), and it remains to be shown that it is the physically correct solution for flow I. The singularities in $\partial u/\partial\sigma$, equation (26), may be compared with those in the corresponding result for flow I', obtained by differentiating equation (10). In both cases half-order singularities are

found at $\sigma = n+$ and $\sigma = 1$ (that is, $|\partial u/\partial\sigma|$ approaches infinity as $(\sigma-n)^{-1/2}$ when σ approaches n from above (designated by $n+$) and there is a similar behavior as σ approaches 1). The quantitative comparison of equation (27) with the corresponding solution, equation (10), for the right-hand sector of flow I' (figs. 2 and 3) is even more convincing. The two solutions are plotted together in figure 6 for $n = 0.707$. The agreement is so close that the two sets of points seem to define a single curve, the uppermost curve of figure 6. (Other calculations for the point defined by $\varphi = 60^{\circ}$, plotted in fig. 7, confirm the expectation that this close agreement becomes progressively impaired as n is chosen smaller and smaller. The error is within 5 percent down to $n = 0.32$.) 1317

Equation (27) is the correct solution for the "symmetrical wake correction" of reference 1. This result has been incorporated in an erratum sheet thereto.

Flow II
(Special)

Flow II has more academic than practical significance. It could be used in the determination of the loading on special ailerons to cancel (approximately) the loading in the wake of a sweptback wing with the ailerons deflected. These ailerons would be full span, or located inboard if part span, with a vertical fence at their juncture to isolate the two ahead of the region of trailing-edge disturbance.

Comparison of the specifications of flow II and flow I in figure 2 shows that II is antisymmetric whereas I is symmetric. It is therefore necessary to use antisymmetric source-sheet sectors in the superposition process, rather than the symmetric sectors used for flow I. The change is effected by simply changing the sign of the second $\cosh^{-1}$ term in equations (18) and (19). The equation corresponding to equation (20) then becomes

$$\frac{\partial u}{\partial\sigma} = \frac{2}{\pi\beta\sqrt{1-\sigma^2}} \int_0^n \frac{\frac{\partial w}{d\sigma_1}\,\sigma_1^{\,2}d\sigma_1}{\sigma_1^{\,2}-\sigma^2} \tag{28}$$

1317

(The Cauchy principal part of the integral is to be taken.) The integral equation that results on setting $\partial u/\partial\sigma = 0$ is thus

$$\int_0^a \frac{\frac{\partial w}{\partial \sigma_1}\sigma_1{}^2 d\sigma_1}{\sigma_1{}^2-\sigma^2} = 0 \qquad |\sigma| < n \tag{29}$$

in place of equation (21). Equation (29) is of the same form as equation (21): $\partial w/\partial\sigma_1$ is replaced by $\sigma_1\partial w/\partial\sigma_1$ as the unknown function of σ_1. According to equation (24), a solution of equation (29) therefore is

$$\frac{\partial w}{\partial \sigma_1}\sigma_1 = C \csc\theta \tag{30}$$

in terms of the function θ defined in equations (22).

For the determination of u, the solution equation (30) is substituted back into equation (28) with $\sigma_1{}^2 = \frac{n^2}{2}(1 - \cos\theta)$ as in equation (22). There is obtained

$$\frac{\partial u}{\partial \sigma} = -\frac{C}{\pi\beta\sqrt{1-\sigma^2}}\int_0^\pi \frac{d\theta}{\frac{2\sigma^2}{n^2} - 1 + \cos\theta} \qquad n < |\sigma| \leq 1$$

This expression for $\partial u/\partial\sigma$ differs from equation (25) only in the lack of a factor σ outside the integral sign. Comparison with equation (26) therefore shows that the result of the integration must be .

$$\frac{\partial u}{\partial \sigma} = -\frac{Cn^2}{2\beta|\sigma|\sqrt{(1-\sigma^2)(\sigma^2-n^2)}} \qquad n < |\sigma| \leq 1 \tag{31}$$

This function is readily integrated with the aid of the elliptic-function substitutions of appendix C. (The absolute value sign is temporarily ignored.) The integral from σ to 1 can be expressed in the form 1317

$$u(\sigma) = \frac{Cn}{4\beta} \frac{\sigma}{|\sigma|} \cos^{-1} \frac{(1+n^2)\sigma^2-2n^2}{(1-n^2)\sigma^2} \qquad n \leq |\sigma| \leq 1$$

where the sign factor $\sigma/|\sigma|$ has been appended in order to provide the antisymmetry of u in $\pm\sigma$ indicated by equation (31). The constant C is established by the condition $u(n) = u_0$, so that finally

$$u(\sigma) = \frac{u_0}{\pi} \frac{\sigma}{|\sigma|} \cos^{-1} \frac{(1+n^2)\sigma^2-2n^2}{(1-n^2)\sigma^2} \qquad n \leq |\sigma| \leq 1 \tag{32}$$

Equation (32) is the solution for the u velocity in the $w = 0$ sectors of flow II (fig. 2). As before, the solution is confirmed by comparison with the solution (equation (12)) for the related flow II' of figure 2, with attention to the singularities in $\partial u/\partial\sigma$. The two solutions are plotted together in figure 6 for $n = 0.707$. Again, the agreement is such that the two sets of points seem to define a single curve, the second from the top in the figure.

Flow III

The boundary conditions (fig. 2) show that flow III cannot be conical like flows I and II, but must be quasi-conical. That is, the velocity components are not of the form $u = F(y/x)$ and $w = G(y/x)$, but are rather of the form $u = xF(y/x)$ and $w = xG(y/x)$. The flow is, however, antisymmetric like flow II. A flow of this type can be built up (compare treatment of flows I and II) by superposing elementary source-sheet sectors that have a strength variation proportional to y or, what amounts to the same thing, to $x\sigma$.

An example of how an arbitrary antisymmetric quasi-conical w velocity distribution of the form

$$w(\sigma_1) = x\sigma_1 f(\sigma_1) \tag{33}$$

1317

can be built up by such sheets is shown in figure 8. (Compare fig. 5, section A-A.) The strength of an elementary sheet is characterized by the strength parameter

$$\Delta f = -\frac{df}{d\sigma_1}\, d\sigma_1$$

The incremental u velocity induced by an elementary sheet for which

$$\begin{aligned} w &= (\text{constant})\ \beta y_1 \\ &= (\Delta f)\ x\sigma_1 \end{aligned}$$

can be derived by standard methods (for example, reference 5). The expression is

$$\begin{aligned} \Delta u &= \frac{(\Delta f)x}{\beta}\, U(\sigma,\sigma_1) \\ &= -\frac{\frac{df}{d\sigma_1}\, x}{\beta}\, U(\sigma,\sigma_1)\ d\sigma_1 \end{aligned} \tag{34}$$

where

$$U(\sigma,\sigma_1) \equiv \frac{\sigma_1{}^2}{\pi(1-\sigma_1{}^2)^{3/2}} \left[(1+\sigma_1\sigma)\ \cosh^{-1}\frac{1+\sigma_1\sigma}{|\sigma_1+\sigma|} - (1-\sigma_1\sigma)\ \cosh^{-1}\frac{1-\sigma_1\sigma}{|\sigma_1-\sigma|} \right]$$

The total value of u contributed by the superposition of all the contemplated sheets is given by

$$u(x,\sigma) = -\frac{x}{\beta}\int_0^n \frac{df}{d\sigma_1}\, U(\sigma,\sigma_1)\ d\sigma_1 \tag{35}$$

Now $u(x,\sigma)$ is specified over the shaded area $(|\sigma| \leq n)$ of flow III in figure 2. Thus, equation (35) represents an integral

equation for the unknown function $df(\sigma_1)/d\sigma_1$. The kernel $U(\sigma,\sigma_1)$ of this integral equation is quite complex. The second derivative of $U(\sigma,\sigma_1)$ with respect to σ has, however, the much simpler form 1317

$$\frac{\partial^2 U(\sigma,\sigma_1)}{\partial\sigma^2} = -\frac{4\sigma\sigma_1^3}{\pi(\sigma_1^2-\sigma^2)^2\sqrt{1-\sigma^2}}$$

This simple function would then be the kernel of the integral equation obtained by differentiating equation (35), provided that the right-hand side of equation (35) could be differentiated under the integral sign without regard for the singularity at $\sigma_1 = \sigma$. It is clear that such a procedure would be invalid in this case because for $|\sigma| < n$ the kernel would have a second-order pole within the range of integration.

H. Mirels of the Lewis laboratory has, however, pointed out that if the differentiation were conducted properly the result might be written in the form

$$\frac{\partial^2 u}{\partial\sigma^2} = \frac{x}{\beta} \int_0^n \frac{df}{d\sigma_1} \frac{4\sigma\sigma_1^3}{\pi(\sigma_1^2-\sigma^2)^2\sqrt{1-\sigma^2}} d\sigma_1 \tag{36}$$

The symbol $\int_0^n$ signifies that the indefinite integral evaluated at $\sigma_1 = 0$ is to be subtracted from the indefinite integral evaluated at $\sigma_1 = n$. Defined in this way, the integration can be carried out without difficulty, inasmuch as the integrand is regular in the neighborhood of the limits.

The formulation of equation (36) is a special case of a theorem that may be briefly stated as follows: If the function $f(x,\xi)$ has an "integrable singularity" within the interval of integration, then, under rather general circumstances, the equation

1317

$$\frac{\partial^n}{\partial x^n}\int_a^b f(x,\xi)d\xi = \int_a^b \frac{\partial^n}{\partial x^n} f(x,\xi)d\xi \tag{D4}$$

is correct. A general discussion and proof of this theorem is provided in appendix D by F. K. Moore of the Lewis laboratory.

The prescribed condition on u in the range $|\sigma| \leq n$ is (flow III, fig. 1):

$$\left.\begin{aligned} u &= \kappa y \\ &= \frac{\kappa x \sigma}{\beta} \\ \text{or} \qquad \frac{\partial^2 u}{\partial \sigma^2} &= 0 \end{aligned}\right\} \quad |\sigma| \leq n$$

Application of this condition to equations (35) and (36) yields the two alternate integral equations for $df(\sigma_1)/d\sigma_1$

$$\left.\begin{aligned} \kappa\sigma &= -\int_0^n \frac{df}{d\sigma_1} U(\sigma,\sigma_1)d\sigma \qquad (37) \\ 0 &= \int_0^n \frac{df}{d\sigma_1} \frac{\sigma_1^{\,3} d\sigma_1}{(\sigma_1^{\,2}-\sigma^2)^2} \qquad (38) \end{aligned}\right\} \quad |\sigma| \leq n$$

Attention will be centered on solving the simpler of the two equations, (38).

It is convenient to write equation (38) in the form

$$I \equiv \int_0^n \frac{g(\sigma_1)\sigma_1 d\sigma_1}{(\sigma_1^2-\sigma^2)^2} = 0 \tag{39}$$

1317

where

$$g(\sigma_1) = \frac{df}{d\sigma_1}\sigma_1^2 \tag{40}$$

is regarded as the unknown function. Then equation (39) will be solved if any choice of $g(\sigma_1)$ can be found that will cause the integral I to vanish.

The transformation

$$\left.\begin{aligned} g(\sigma_1) &= Cn^2h(\theta) \\ \sigma_1^2 &= n^2 \sin^2 \theta \\ \sigma^2 &= \frac{n^2q^2}{q^2-1} \end{aligned}\right\} \tag{41}$$

converts equation (39) to

$$I = C(1-q^2)^2 \int_0^{\pi/2} \frac{h(\theta) \sin \theta \cos \theta \, d\theta}{(\sin^2 \theta + q^2 \cos^2 \theta)^2} \tag{42}$$

Certain similarities to integrals 14 and 15 of reference 11, table 48, suggest

$$h(\theta) = \tan \theta \tag{43a}$$

$$h(\theta) = \cot \theta \tag{43b}$$

1317

as possible solutions of equation (38) or (39). Both functions are found upon substitution and integration to satisfy the equation. Any linear combination of solutions (43) is also clearly a solution. Thus, the integral equation (38) does not have a unique solution.

The later identification of equation (43a) as the physically correct solution is anticipated at this point. Then the u velocity in the $w = 0$ regions of flow III may be evaluated as follows. Equation (36) can be written

$$\frac{\partial^2 u}{\partial \sigma^2} = + \frac{4x\sigma}{\pi\beta\sqrt{1-\sigma^2}} I \tag{44}$$

where I is the integral defined in equation (39) or equation (42). With the solution equation (43a) substituted in equation (42), the integral I has the value (reference 11, table 48, integral 14)

$$I = C(1-q^2)^2 \frac{\pi}{4q} \qquad n < |\sigma| \leq 1 \tag{45}$$

But according to equations (41)

$$q = \frac{\sigma}{\sqrt{\sigma^2 - n^2}}$$

whence

$$I = \frac{\pi}{4} \frac{Cn^4}{\sigma(\sigma^2-n^2)^{3/2}} \qquad n < |\sigma| \leq 1$$

and, upon returning to equation (44),

$$\frac{\partial^2 u}{\partial \sigma^2} = \frac{Cn^4 x}{\beta(\sigma^2-n^2)^{3/2}\sqrt{1-\sigma^2}} \qquad n < |\sigma| \leq 1 \tag{46}$$

The u velocity in the region $n \leq \sigma \leq 1$ results upon integrating equation (46) twice between the limits σ and 1. This integration may be effected with the aid of the elliptic-integral substitutions of appendix C, and the result is 1317

$$u(\sigma,x) = \frac{Cn^2x}{\beta(1-n^2)}\left\{\sigma\left[E(\varphi,k)-n^2F(\varphi,k)\right] - \frac{1-n^2}{2}\sin 2\varphi\right\}$$

where

$$\varphi = \sin^{-1}\sqrt{\frac{1-\sigma^2}{1-n^2}}$$

$$k = \sqrt{1-n^2}$$

The value of C is established by the condition that $u(n,x) = \kappa y = \kappa nx/\beta$. The negative range of σ $(-1 \leq \sigma \leq -n)$ is taken care of by introduction of the antisymmetry factor $\sigma/|\sigma|$. These operations yield the final result

$$u(\sigma,x) = \frac{\sigma}{|\sigma|}\frac{\kappa x}{\beta}\frac{|\sigma|\left[E(\varphi,k)-n^2F(\varphi,k)\right] - \frac{1-n^2}{2}\sin 2\varphi}{E\left(\frac{\pi}{2},k\right)-n^2F\left(\frac{\pi}{2},k\right)} \qquad n \leq |\sigma| \leq 1 \tag{47}$$

Equation (47) is the solution for the u velocity in the $w = 0$ sectors of flow III (fig. 2). This equation results from the choice of equation (43a) among the solutions of the integral equation (39). The correctness of this choice is determined by comparison of equation (47) with the solution equation (15) of the related flow III of figure 2. Both equations exhibit a half-order singularity in $\partial u/\partial\sigma$ at $\sigma = n+$ together with $\partial u/\partial\sigma = 0$ at $\sigma = 1$. (Equation (43b), on the other hand, leads to a different behavior.) Equations (47) and (15) are plotted together in figure 6 for $n = 0.707$. Again, as for flows I and I' and II and II' the agreement is such that the two sets of points lie on a single curve, the bottom curve in the figure. The degree of agreement as a function of the parameter n for the ray defined by $\varphi = 60^\circ$ is shown in figure 7. The error is within 5 percent down to $n = 0.4$.

1317

Flow IV

The boundary conditions (fig. 1) show that this flow is quasi-conical like flow III. That is, the velocity components are of the form $u = xF(y/x)$ and $w = xG(y/x)$. The flow is, however, symmetric like flow I. A flow of this type can be built up (compare, treatment of flows I and III) by superposing elementary source-sheet sectors that have a strength variation proportional to x. These sheets are arranged in the same manner as the corresponding constant-strength sheets employed for flow I. (See section A-A, fig. 5.)

Let the source strength of an elementary sheet sector be specified by

$$w = (\Delta f)\, x$$

where Δf is a constant for a particular sheet and the sector extends from $\sigma = -\sigma_1$ to $\sigma = \sigma_1$. The incremental u velocity induced by such a sheet has been calculated by the method of reference 5 and the result is

$$\Delta u = \frac{\Delta f}{\beta} W(x,\sigma,\sigma_1) \tag{48}$$

where

$$W(x,\sigma,\sigma_1) = \frac{x\sigma_1}{\pi(1-\sigma_1^2)}\left(2\sqrt{1-\sigma^2} - \frac{1-\sigma_1\sigma}{\sqrt{1-\sigma_1^2}}\cosh^{-1}\frac{1-\sigma_1\sigma}{|\sigma_1-\sigma|} - \right.$$

$$\left. \frac{1+\sigma_1\sigma}{\sqrt{1-\sigma_1^2}}\cosh^{-1}\frac{1+\sigma_1\sigma}{|\sigma_1+\sigma|}\right) -$$

$$\frac{\sigma_1}{\pi\sqrt{1-\sigma_1^2}}\int_{\substack{\text{Mach}\\ \text{cone}}}^{x}\left(\cosh^{-1}\frac{1-\sigma_1\sigma}{|\sigma_1-\sigma|} + \cosh^{-1}\frac{1+\sigma_1\sigma}{|\sigma_1+\sigma|}\right)dx$$

(The integral was not evaluated inasmuch as only the x-derivatives of W will be needed in the applications herein.)

The individual sheet-strength parameter Δf can be expressed as 1317

$$\Delta f = -\frac{df}{d\sigma_1}\,d\sigma_1$$

so that

$$\Delta u = -\frac{\frac{df}{d\sigma_1}}{\beta}\,W(x,\sigma,\sigma_1)\,d\sigma_1$$

The total value of u contributed by the superposition of all the contemplated sheets is then

$$u(x,\sigma) = -\frac{1}{\beta}\int_0^n \frac{df}{d\sigma_1}\,W(x,\sigma,\sigma_1)\,d\sigma_1 \tag{49}$$

The development beyond this point runs similarly to that for flow III. Inasmuch as $u(x,\sigma)$ is specified over the shaded area $(|\sigma| \leq n)$ of flow IV of figure 2, equation (49) is an integral equation for the unknown function $df(\sigma_1)/d\sigma_1$. The kernel $W(x,\sigma,\sigma_1)$ is disagreeably complex, but its second derivative with respect to x,

$$\left[\frac{\partial^2}{\partial x^2}W(x,\sigma,\sigma_1)\right]_y = \frac{-4\sigma^4\sigma_1}{\pi x(\sigma_1{}^2-\sigma^2)^2\sqrt{1-\sigma^2}}$$

is relatively simple. The theorem, equation (D4), for differentiation under the integral sign is therefore employed to give

$$\left(\frac{\partial^2 u}{\partial x^2}\right)_y = \frac{1}{\beta}\int_0^n \frac{df}{d\sigma_1}\,\frac{4\sigma^4\sigma_1}{\pi x(\sigma_1{}^2-\sigma^2)^2\sqrt{1-\sigma^2}}\,d\sigma_1 \tag{50}$$

1317

The integration symbol $\int_0^n$ has the special significance previously discussed under flow III.

The prescribed condition on u in the range $|\sigma| \leq n$ is (flow IV, fig. 2)

$$\left.\begin{aligned} u &= \kappa x \\ \text{or} \qquad \left(\frac{\partial^2 u}{\partial x^2}\right)_y &= 0 \end{aligned}\right\} \quad |\sigma| \leq n$$

Application of this condition to equation (50) yields the integral equation for $df(\sigma_1)/d\sigma_1$

$$\int_0^n \frac{\frac{df}{d\sigma_1}\sigma_1 d\sigma_1}{(\sigma_1{}^2-\sigma^2)^2} = 0 \qquad |\sigma| \leq n \tag{51}$$

This equation may be compared with the corresponding equation for flow III (equation (38)). Both equations are of the form of equation (39), but with different expressions for the unknown $g(\sigma_1)$. Thus the method of solution for equation (39) will apply for equation (51), with

$$g(\sigma_1) = \frac{df}{d\sigma_1} \tag{52}$$

Once again the proper solution for $g(\sigma_1) = Cn^2h(\theta)$ is found (by later comparison of flows IV and IV') to be given by equation (43a). This solution is now employed in equation (50) in the range $n < |\sigma| \leq 1$ for which $\partial^2u/\partial x^2$ does not vanish. The integral has the value given in equation (45), and equation (50) becomes

$$\left(\frac{\partial^2 u}{\partial x^2}\right)_y = \frac{Cn^4\sigma^3}{\beta x(\sigma^2-n^2)^{3/2}\sqrt{1-\sigma^2}} \qquad n < |\sigma| < 1 \tag{53}$$

1317

Now u is known to be of the form (quasi-conical flow)

$$\left.\begin{aligned} u &= \beta y f(\sigma) \\ \text{so that} \\ \left(\frac{\partial u}{\partial x}\right)_y &= -\sigma^2 f'(\sigma) = g(\sigma), \quad \text{say} \\ \left(\frac{\partial^2 u}{\partial x^2}\right)_y &= -\frac{\sigma}{x} g'(\sigma) \end{aligned}\right\} \tag{54}$$

Thus by comparison of equation (53) with the last of equations (54)

$$g'(\sigma) = \frac{-Cn^4\sigma^2}{\beta(\sigma^2-n^2)^{3/2}\sqrt{1-\sigma^2}}$$

The elliptic-function substitutions of appendix C are convenient for performing the integration for $g(\sigma)$, with the limits σ and 1. Then $f'(\sigma) = -g(\sigma)/\sigma^2$ may in turn be integrated to yield u. The result is

$$u(\sigma,x) = \frac{Cn^4 x}{\beta(1-n^2)}\left[F(\varphi,k)-E(\varphi,k)\right]$$

where

$$\varphi = \sin^{-1}\sqrt{\frac{1-\sigma^2}{1-n^2}}$$

$$k = \sqrt{1-n^2}$$

The constant C is established by the condition that

1317

$$u(n,x) = \kappa x$$

so that finally

$$u(\sigma,x) = \kappa x \frac{F(\varphi,k) - E(\varphi,k)}{F\left(\frac{\pi}{2},k\right) - E\left(\frac{\pi}{2},k\right)} \tag{55}$$

Equation (55) is the solution for the u velocity in the $w = 0$ sectors of flow IV of figure 2. This equation results from the choice of equation (43a) among the solutions of the integral equation (39). The correctness of this choice is determined by comparison of equation (55) with the solution equation (17) of the related flow IV' of figure 2. Both equations exhibit a half-order singularity in $\partial u/\partial\sigma$ at $\sigma = n+$ together with $\partial u/\partial\sigma = 0$ at $\sigma = 1$. (Equation (43b), on the other hand, leads to a different behavior.) Equations (55) and (17) are plotted together in figure 6 for $n = 0.707$. Once again, as for the pairs of flows I and I', II and II', and III and III', the agreement is sufficiently close so that the two sets of points seem to define a single curve, which is the curve next to the bottom in the figure. The degree of agreement as a function of the parameter n, for the point defined by $\varphi = 60^{\circ}$, is shown in figure 7. The error is within 5 percent down to $n = 0.27$.

DISCUSSION

In the foregoing derivations principal attention has been devoted to the solution for the u velocity (or the pressure disturbance) in the regions in which it is unknown. The solution for the w velocity (or the upwash) in the regions in which it is unknown has also been obtained, although for brevity it has been omitted herein (except in the single example, appendix B). Comparisons of the singularities in the w velocity between flows I and I', III and III', and IV and IV', respectively, were made in addition to the u velocity comparisons mentioned earlier. These additional comparisons again showed very close agreement between each flow and its related flow, in support of the correctness of the choice in each case among the solutions of the integral equations for flows I, III, and IV.

A primary aim of this report has been to provide the analytical basis for approximating in simple fashion the effect of subsonic trailing edges on damping in pitch and roll for thin sweptback wings in a supersonic stream. (See reference 3 for detailed application.) Accordingly, the main emphasis has been placed on the "desired flows" I to IV. The more easily solved "related flows" I' to IV' were found, however, to approximate flows I to IV in the regions of interest much better than had been anticipated. (See figs. 6 and 7.) It is clear from the comparison that a moderate modification of the boundary condition near the left-hand Mach line (fig. 2) - the distinguishing feature between the unprimed and primed flows - will scarcely affect the flow in the region near the right-hand Mach line. Thus such a modification may freely be made to simplify a given problem, and the solution of the modified flow will apply to the desired flow with engineering accuracy. In particular, the related flows herein may be used in place of the desired flows if trigonometric functions are preferred to elliptic integrals. 1317

A general method for the calculation of flows (fig. 9) of which flows I' and IV' are special cases is included in a paper by Goodman (reference 12) after the bulk of the present work was completed. The method and its applications have been simplified and extended by Mirels (reference 13). The general solution for the unknown u velocity in the flows specified in figure 9 is given in elegant form in reference 13. This result, originally obtained by means of a doublet distribution, may be derived by means of a development of the present source-distribution method. The unknown w velocity may be obtained as well. The details are given in appendix E as a matter of interest.

CONCLUDING REMARKS

The flow over a sweptback wing may be obtained by superposing on a basic delta-wing flow additional flows to cancel the lift outside the boundaries defining the sweptback wing. The cancellation flow for the trailing edge modifies the lift in a region ahead of the trailing edge if the component of the stream velocity normal to the edge is subsonic. For angle of attack the principal part of this cancellation flow is conical; for rolling and for pitching the principal part is quasi-conical. The derivation of

these and several related conical and quasi-conical flows has been carried out in this report. For each case the problem was formulated as an integral equation. Some of the results are applied to damping in roll and in pitch in another report.

1317

Lewis Flight Propulsion Laboratory,
National Advisory Committee for Aeronautics,
Cleveland, Ohio, February 3, 1950.

APPENDIX A

SYMBOLS

The following symbols are used in this report:

C	boundary for line integral, as specified in text; also undetermined constant
C_p	pressure coefficient (proportional to u)
$E(\varphi,k)$	incomplete elliptic integral of second kind with amplitude φ and modulus k
$F(\varphi,k)$	incomplete elliptic integral of first kind with amplitude φ and modulus k
$f(\theta)$	function defined in equation (22)
$f(\sigma)$	function defined in equation (54)
$f(\sigma_1)$	function defined in equation (33)
$g(\sigma)$	function defined in equation (54)
$g(\sigma_1)$	function defined in equation (40) for flow III, in equation (52) for flow IV
$h(\theta)$	function defined in equation (41)
I	integral defined in equation (39)
J	integral defined in equation (B1)
$k =$	$\sqrt{1-n^2}$
M	Mach number, ratio of stream velocity to velocity of sound in free stream
n	value of σ along side edges of shaded triangular regions in figure 2
$q =$	$\sigma/\sqrt{\sigma^2-n^2}$
S	area for surface integral, as specified in text

1317

$U(\sigma,\sigma_1)$	function defined following equation (34)
u,v,w	disturbance velocity components along x-, y-, and z-axes, respectively
u_0	constant value of u over prescribed area
Δu	increment in u
V	free-stream velocity
$W(x,\sigma,\sigma_1)$	function defined following equation (48)
x,y,z	Cartesian coordinates: x-axis parallel to free-stream direction; y-axis horizontal and toward right, looking upstream; z-axis vertically upward
α	angle of attack
β	$\sqrt{M^2-1}$
δ	defined in equation (22)
θ	defined in equation (22) for flows I and II, in equation (41) for flows III and IV
κ	constant of proportionality (fig. 2)
ξ,η	oblique coordinates measured parallel to downstream Mach lines, defined by equations (2)
$\sigma =$	$\beta y/x$
$\tau =$	$\frac{1+n}{1-n}$ (See fig. 3 for geometric significance.)
$\varphi =$	$\sin^{-1}\sqrt{\frac{1-\sigma^2}{1-n^2}}$
I,II III,IV	desired flows designated in figure 2
I',II', III',IV'	related flows designated in figure 2

$\int_a^b$ special integration sign defined following equation (36)

1317

A primed function signifies the first derivative of the function with respect to the independent variable.

1317

APPENDIX B

EVALUATION OF UPWASH IN REGION B OF FLOW I'

Note that just before equation (4) there is the definition

$$J(\xi,\eta_1) \equiv \frac{1}{\pi M}\int_{\eta_1/\tau}^{\xi} \frac{\left(\frac{\partial w}{\partial x_1}\right) d\xi_1}{\sqrt{\xi-\xi_1}} \tag{B1}$$

Now J is a known function, which was evaluated in the course of obtaining equation (10). Thus equation (B1) is an Abel integral equation for the unknown function $\partial w/\partial x_1$. Its solution (reference 6) is

$$\frac{\partial w}{\partial x_1} = M\frac{\partial}{\partial \xi_1}\int_{\eta_1/\tau}^{\xi_1} \frac{J(\xi,\eta_1)d\xi}{\sqrt{\xi_1-\xi}} \tag{B2}$$

With the value of J for flow I' (equation (6)) this is, provided that the integral on the right-hand side is continuous (reference 7),

$$\frac{\partial w}{\partial x_1} = -\frac{Mu_0}{\pi\sqrt{\eta_1}}\frac{\partial}{\partial \xi_1}\int_{\eta_1/\tau}^{\xi_1} \frac{d\xi}{\sqrt{\xi_1-\xi}}$$

$$= -\frac{Mu_0}{\pi\sqrt{\eta_1(\xi_1-\eta_1/\tau)}}$$

Upon dropping the subscripts and converting to Cartesian coordinates by means of equations (2),

$$\frac{\partial w}{\partial x} = -\frac{\beta u_0}{\pi}\sqrt{\frac{2(1+n)}{(x+\beta y)(nx-\beta y)}} \tag{B3}$$

The indefinite integral is

1317

$$w = -\frac{\beta u_0}{\pi}\sqrt{\frac{2(1+n)}{n}}\cosh^{-1}\frac{2nx-\beta y(1-n)}{|\beta y|(1+n)}$$

$$= -\frac{\beta u_0}{\pi}\sqrt{\frac{2(1+n)}{n}}\cosh^{-1}\frac{2n-\sigma(1-n)}{|\sigma|(1+n)} \qquad \text{(B4)}$$

Equation (B4) gives $w = 0$ along the ξ-axis $(\sigma = -1)$ and along the line $\eta = \tau\xi$ $(\sigma = n)$, as it should for flow I'. The constant of integration is therefore zero and equation (B4) is the required solution for the upwash velocity w.

1317

APPENDIX C

AIDS TO INTEGRATION

The more elaborate integrations in this report, leading in most cases to elliptic integrals, are most easily evaluated with the aid of the following elliptic-function substitutions, together with the tables of integrals in references 14 and 15:

$$\sqrt{1-\sigma^2} = k \text{ sn } u$$

$$\sqrt{\sigma^2-n^2} = k \text{ cn } u$$

$$\sigma = \text{dn } u$$

$$d\sigma = -k^2 \text{ sn } u \text{ cn } u \, du$$

where

$u = F(\varphi,k)$ [not to be confused with the u velocity]

$$\varphi = \sin^{-1}\sqrt{\frac{1-\sigma^2}{1-n^2}}$$

$$k = \sqrt{1-n^2}$$

$$k' = \sqrt{1-k^2} = n$$

APPENDIX D

DIFFERENTIATION OF INTEGRALS OF SINGULAR FUNCTIONS

1317

By Franklin K. Moore

The problem arising in the differentiation of equation (35) may be stated in the following general terms: It is required to differentiate, with respect to a parameter of the integrand, the definite integral of a function that, though integrable, has a singularity inside the range of integration such that the definite integral of the derivative is not convergent. It is shown herein that, subject to certain restrictions, this differentiation can be carried out in a simple manner, avoiding consideration of the singularity.

The integral to be differentiated can be written

$$I(x) \equiv \int_a^b f(x,\xi)d\xi$$

It will be supposed that $f(x,\xi)$ has a singularity at some point $a < \xi < b$ and is a function such that

(1) An indefinite integral $F(x,\xi) = \int^{\xi} f(x,\xi)d\xi$ may be found.

(2) The function $I(x)$ is a convergent improper integral that can be written $I(x) = F(x,b)-F(x,a)$. (See reference 16, paragraph 169.) Under these restrictions, $f(x)$ may have an "integrable singularity" within the interval of integration. For example, $f(x,\xi) = \log_e |x-\xi|$, $a < x < b$, meets the foregoing requirements (1) and (2).

It is required to carry out the following differentiation:

$$I'(x) = \frac{\partial}{\partial x}\int_a^b f(x,\xi)d\xi = \frac{\partial}{\partial x}F(x,b) - \frac{\partial}{\partial x}F(x,a) \qquad \text{(D1)}$$

1317

By definition,

$$f(x,\xi) = \frac{\partial}{\partial\xi} F(x,\xi)$$

It is supposed that

(3) At the points $\xi = a,b$, $\frac{\partial}{\partial x}\left[\frac{\partial}{\partial\xi} F(x,\xi)\right] = \frac{\partial}{\partial\xi}\left[\frac{\partial}{\partial x} F(x,\xi)\right]$.
In order that this relation be valid, the following restrictions on $F(x,\xi)$ in the neighborhoods of $\xi = a,b$ are required (reference 16, paragraph 213):

(a) $\frac{\partial F}{\partial x}$ and $\frac{\partial F}{\partial\xi}$ exist.

(b) $\frac{\partial}{\partial x}\left(\frac{\partial F}{\partial\xi}\right)$ is continuous.

It then follows that

$$\frac{\partial}{\partial x} f(x,\xi) = \frac{\partial}{\partial\xi}\left[\frac{\partial}{\partial x} F(x,\xi)\right]$$

Thus, provided that

(4) $\frac{\partial}{\partial x} f(x,\xi)$ has an indefinite integral,

$$\frac{\partial}{\partial x} F(x,\xi) = \int^{\xi} \frac{\partial}{\partial x} f(x,\xi)d \quad + g(x)$$

where $g(x)$ is an arbitrary function.

Equation (D1) can then be written

$$I'(x) = \left[\int^{\xi} \frac{\partial}{\partial x} f(x,\xi)d\xi+g(x)\right]_{\xi=b} - \left[\int^{\xi} \frac{\partial}{\partial\xi} f(x,\xi)d\xi+g(x)\right]_{\xi=a}$$

or

$$I'(x) = \int^{b} \frac{\partial}{\partial x} f(x,\xi)d\xi - \int^{a} \frac{\partial}{\partial x} f(x,\xi)d\xi \tag{D2}$$

1317

When the convention introduced in equation (36) is followed, equation (D2) can be written

$$I'(x) = \int_{a}^{b} \frac{\partial}{\partial x} f(x,\xi)d\xi \tag{D3}$$

The result (D3) may be stated as follows: Subject to the restrictions (1) to (4) on the behavior of the integrand near the limits, the differentiation with respect to a parameter to the integrand of a convergent improper integral may be accomplished by formally integrating the derivative of the integrand, as though its singularity were not present.

It is clear that

$$I''(x) = \int_{a}^{b} \frac{\partial^2}{\partial x^2} f(x,\xi)d\xi \tag{D4}$$

provided that requirement (3) is replaced by the restriction that, near $\xi = a,b$

$$\frac{\partial^2}{\partial x^2}\left[\frac{\partial}{\partial \xi} F(x,\xi)\right] = \frac{\partial}{\partial \xi}\left[\frac{\partial^2}{\partial x^2} F(x,\xi)\right]$$

Equation (D4) is the relation used in this report.

The foregoing proof may easily be extended to the case where a and b are functions of x, subject only to the additional requirement that

1317

(5) $a'(x)$ and $b'(x)$ are continuous, yielding the result

$$I'(x) = b'(x)f(x,b)-a'(x)f(x,a) + \int_a^b \frac{\partial}{\partial x} f(x,\xi)d\xi \qquad \text{(D5)}$$

APPENDIX E

GOODMAN-MIRELS GENERALIZED CANCELLATION FLOW

1317

The generalized cancellation flow introduced in reference 12 and extended in reference 13 is specified by the boundary conditions of figures 9(a) or 9(b), depending on the position of the line $\eta = f(\xi)$. Consider first figure 9(a). The flow can be represented, as before, by sources distributed along the surface in proportion to w. In the Mach coordinates of reference 5, the surface potential is

$$\varphi(\xi,\eta) = -\frac{1}{\pi M}\int_{f(\xi)}^{\eta}\frac{d\eta_1}{\sqrt{\eta-\eta_1}}\int_{G(\eta_1)}^{\xi}\frac{w\,d\xi_1}{\sqrt{\xi-\xi_1}} \quad \text{region B} \tag{E1}$$

where (ξ,η) is located at P in region B. In what follows φ will play essentially the role that u played in the solution of flows I' to IV'.

Consider next the case of figure 9(b). By virtue of the left-hand $u = 0$ region (reference 5), the region of integration for $\varphi(\xi,\eta)$ will not include the area left unshaded in the upper corner. It is found that with the present notation the limits of integration are unchanged from the case of figure 9(a). Thus equation (E1) applies equally well for the case of figure 9(a) or 9(b).

<u>Solution for u in region A</u>. - Define

$$J(\xi,\eta_1) = \frac{1}{\pi M}\int_{G(\eta_1)}^{\xi}\frac{w\,d\xi_1}{\sqrt{\xi-\xi_1}} \tag{E2}$$

so that

$$\varphi(\xi,\eta) = -\int_{f(\xi)}^{\eta}\frac{J(\xi,\eta_1)\,d\eta_1}{\sqrt{\eta-\eta_1}} \quad \text{region B} \tag{E3}$$

1317

Equation (E3) is an Abel integral equation for J. Its solution is (references 6 and 7)

$$J(\xi,\eta_1) = -\frac{1}{\pi}\frac{\partial}{\partial\eta_1}\int_{f(\xi)}^{\eta_1}\frac{\varphi(\xi,z)dz}{\sqrt{\eta_1-z}} \tag{E4}$$

Now let the general point (ξ,η) be located in region A at Q. The only change in the expression for φ is in the upper limit for η_1. This upper limit is now at the intersection of the line PQ with the line $\eta = g(\xi)$. Accordingly,

$$\varphi(\xi,\eta) = -\int_{f(\xi)}^{g(\xi)}\frac{J(\xi,\eta_1)d\eta_1}{\sqrt{\eta-\eta_1}} \tag{E5}$$

The value of J already obtained in equation (E4) applies here as well as earlier. Upon making the substitution,

$$\varphi(\xi,\eta) = \frac{1}{\pi}\int_{f(\xi)}^{g(\xi)}\frac{d\eta_1}{\sqrt{\eta-\eta_1}}\left[\frac{\partial}{\partial\eta_1}\int_{f(\xi)}^{\eta_1}\frac{\varphi(\xi,z)dz}{\sqrt{\eta_1-z}}\right] \quad \text{region A} \tag{E6}$$

$$= -\frac{1}{2\pi}\int_{f(\xi)}^{g(\xi)}\frac{d\eta_1}{\sqrt{\eta-\eta_1}}\left\lceil\int_{f(\xi)}^{\eta_1}\frac{\varphi(\xi,z)dz}{(\eta_1-z)^{3/2}}\right. \quad \text{region A} \tag{E7}$$

where the sign $\lceil\quad$ designates the finite part of the integral according to Hadamard's definition (reference 17).

The factor $1/\sqrt{\eta-\eta_1}$, which does not contain z, may be included in a common integrand, and the finite-part sign may be removed to the outside of the double integral:

$$\varphi(\xi,\eta) = -\frac{1}{2\pi}\left|\int_{f(\xi)}^{g(\xi)} d\eta_1 \int_{f(\xi)}^{\eta_1} \frac{\varphi(\xi,z)dz}{\sqrt{\eta-\eta_1}\,(\eta_1-z)^{3/2}}\right. \tag{E8}$$

1317

The order of integration may now be reversed with the aid of the scheme for the limits sketched in figure 10:

$$\varphi(\xi,\eta) = -\frac{1}{2\pi}\left|\int_{f(\xi)}^{g(\xi)} \varphi(\xi,z)dz \int_{z}^{g(\xi)} \frac{d\eta_1}{\sqrt{\eta-\eta_1}\,(\eta_1-z)^{3/2}}\right. \tag{E9}$$

Evaluation of the finite part of the inner integral yields the final result

$$\varphi(\xi,\eta) = \frac{\sqrt{\eta-g(\xi)}}{\pi}\int_{f(\xi)}^{g(\xi)} \frac{\varphi(\xi,z)dz}{(\eta-z)\sqrt{g(\xi)-z}} \qquad \text{region A} \tag{E10}$$

Equation (E10) gives the surface potential in region A that results from a prescribed distribution of surface potential in region B.

Equation (E10) is equivalent to equation (15) of reference 13, which applies to the mirror image of figure 9. (The same equation was obtained for a restricted situation in reference 18 (equation (61d) therein).) According to reference 13, differentiation yields

1317

$$u(\xi,\eta) = \frac{\sqrt{\eta-g(\xi)}}{\pi}\int_{f(\xi)}^{g(\xi)} \frac{u(\xi,z)dz}{(\eta-z)\sqrt{g(\xi)-z}} -$$

region A

$$\frac{1-g'(\xi)}{2\pi\beta\sqrt{\eta-g(\xi)}}\int_{f(\xi)}^{g(\xi)} \frac{\beta u + v}{\sqrt{g(\xi)-z}}\,dz \qquad \text{(E11)}$$

which is equation (17b) therein. This equation constitutes a general solution for the disturbance in region A regardless of whether the Kutta condition is imposed along the line $\eta = g(\xi)$. It is shown in reference 13 that imposition of the Kutta condition along the line $\eta = g(\xi)$ modifies the sidewash distribution v in such a way as to cause the second integral to vanish. (If the boundary $\eta = g(\xi)$ of fig. 9 slopes everywhere toward the left, instead of toward the right as shown, v is determined uniquely by the known u distribution, and the Kutta condition may not be imposed.)

The Kutta condition version of equation (E11) (that is, with the second integral set equal to zero) may be obtained more directly for case (b) of figure 9. In this case (including the special case $f(\xi) = 0$), u may be written in place of φ and $\partial w/\partial x_1$ in place of w in equations (E1) through (E10); the result is given in the new equation (E10). This approach at first parallels and then extends that of equation (3) and the following equations in the text.

Solution for w in region B.- It is worthwhile to complete the solution of the Goodman-Mirels cancellation flow (fig. 9) by evaluating the upwash velocity w in region B. This knowledge of w will be useful in determining the downwash field in the general vicinity of the wing - in particular, within a chord length behind the trailing edge - by means of the cancellation technique. (A line vortex method (references 19 and 20) yields the downwash farther back more simply, and simple means are known (cited in references 19 and 20) for determing the downwash immediately behind the trailing edge.)

The solution is started by inverting (solving) the Abel integral equation (E2) with the aid of references 6 and 7:

1317

$$w = M \frac{\partial}{\partial \xi_1} \int_{G(\eta_1)}^{\xi_1} \frac{J(\xi,\eta_1)d\xi}{\sqrt{\xi_1 - \xi}} \tag{E12a}$$

$$= -\frac{M}{2} \sqrt{\int_{G(\eta_1)}^{\xi_1} \frac{J(\xi,\eta_1)d\xi}{(\xi_1 - \xi)^{3/2}}} \tag{E12}$$

The solution for J has already been determined in equation (E4). Changing z to η therein gives

$$J(\xi,\eta_1) = -\frac{1}{\pi} \frac{\partial}{\partial \eta_1} \int_{f(\xi)}^{\eta_1} \frac{\varphi(\xi,\eta)d\eta}{\sqrt{\eta_1 - \eta}} \tag{E13a}$$

$$= \frac{1}{2\pi} \sqrt{\int_{f(\xi)}^{\eta_1} \frac{\varphi(\xi,\eta)d\eta}{(\eta_1 - \eta)^{3/2}}} \tag{E13}$$

Substitution of equations (E13a) and (E13) into equations (E12a) and (E12), respectively, yields

1317

$$w(\xi_1,\eta_1) = -\frac{M}{\pi}\frac{\partial}{\partial\xi_1}\int_{G(\eta_1)}^{\xi_1}\frac{d\xi}{\sqrt{\xi_1-\xi}}\left(\frac{\partial}{\partial\eta_1}\int_{f(\xi)}^{\eta_1}\frac{\varphi(\xi,\eta)d\eta}{\sqrt{\eta_1-\eta}}\right) \quad \text{region B} \tag{E14a}$$

$$= -\frac{M}{4\pi}\left\lceil\int_{G(\eta_1)}^{\xi_1}\frac{d\xi}{(\xi_1-\xi)^{3/2}}\int_{f(\xi)}^{\eta_1}\frac{\varphi(\xi,\eta)d\eta}{(\eta_1-\eta)^{3/2}}\right. \quad \text{region B} \tag{E14}$$

By comparison with equation (10) of reference 13, equation (E14) may be interpreted as the upwash velocity w due to a given distribution of doublets (or of vorticity) over a prescribed area. The area of integration is shown cross-hatched in figure 11 for the same two configurations (a) and (b) considered in figure 9. Note that the regions A' and B', which lie in the zone that influences the point ξ_1,η_1, are not included. This result implies that for the point ξ_1,η_1 the integral of the doublets in A' exactly cancels the integral of the doublets in B'. The situation here with respect to doublets presents an interesting parallel to Evvard's original discovery with respect to sources in connection with his membrane concept. (See reference 21.)

Equation (E14a) is an alternate form of equation (E14) that may yield simpler integrations in some cases. Note that the $\lceil$ (finite part) operation is avoided. Similar considerations apply to the alternate forms (E12a) and (E12), (E13a) and (E13).

A particularly simple result for $\partial w/\partial x$ can be obtained when the Kutta condition is imposed. Thus, apply to equation (E14) a procedure analogous to that by which $\partial\varphi/\partial x$ is obtained from φ in reference 5. The result is

$$\frac{\partial w}{\partial x_1} = -\frac{M}{4\pi}\left[\int_{G(\eta_1)}^{\xi_1} \frac{d\xi}{(\xi_1-\xi)^{3/2}} \int_{f(\xi)}^{\eta_1} \frac{u(\xi,\eta)\,d\eta}{(\eta_1-\eta)^{3/2}}\right.$$

$$-\frac{M}{4\pi}\left[\int_{ab} \frac{\varphi(\xi,\eta)\,d\eta}{(\xi_1-\xi)^{3/2}\,(\eta_1-\eta)^{3/2}}\right.$$

$$-\frac{M}{4\pi}\left(1-G'(\eta_1)\right)\left[\int_{bc} \frac{\varphi(\xi,\eta)\,d\eta}{(\xi_1-\xi)^{3/2}\,(\eta_1-\eta)^{3/2}}\right.$$

The first line integral vanishes because $\varphi = 0$ along ab, and the second line integral may be expressed differently:

$$\frac{\partial w}{\partial x_1} = -\frac{M}{4\pi}\left[\int_{G(\eta_1)}^{\xi_1} \frac{d\xi}{(\xi_1-\xi)^{3/2}} \int_{f(\xi)}^{\eta_1} \frac{u(\xi,\eta)\,d\eta}{(\eta_1-\eta)^{3/2}}\right.$$

$$-\frac{M}{4\pi}\,\frac{1-\dfrac{d\xi_2}{d\eta_1}}{(\xi_1-\xi_2)^{3/2}}\left[\int_{f(\xi_2)}^{G(\xi_2)} \frac{\varphi(\xi_2,\eta)\,d\eta}{\left[g(\xi_2)-\eta\right]^{3/2}}\right. \tag{E15}$$

where $\xi_2 \equiv g(\eta_1)$.

1317

The line integral may be put in more convenient form by means of an integration by parts. The final result may be written

$$\frac{\partial w}{\partial x_1} = -\frac{M}{4\pi}\left[\int_{G(\eta_1)}^{\xi_1} \frac{d\xi}{(\xi_1-\xi)^{3/2}} \int_{f(\xi)}^{\eta_1} \frac{u(\xi,\eta)d\eta}{(\eta_1-\eta)^{3/2}}\right.$$

$$\left. + \frac{1-\frac{d\xi_2}{d\eta_1}}{2\pi(\xi_1-\xi_2)^{3/2}} \int_{f(\xi_2)}^{G(\xi_2)} \frac{\beta u+v}{\sqrt{g(\xi_2)-\eta}}\, d\eta\right] \qquad \text{(E16)}$$

The line integral is the same as the one in equation (E11). Here again, then, the line integral vanishes if the Kutta condition is imposed along the line $\xi = G(\eta)$.

REFERENCES

1. Cohen, Doris: The Theoretical Lift of Flat Swept-Back Wings at Supersonic Speeds. NACA TN 1555, 1948.

2. Lagerstrom, P. A.: Linearized Supersonic Theory of Conical Wings - (Corrected Copy). NACA TN 1685, 1950.

3. Ribner, Herbert S.: On the Effect of Subsonic Trailing Edges on Damping in Roll and Pitch of Thin Sweptback Wings in a Supersonic Stream. NACA TN 2146, 1950.

4. Puckett, Allen E.: Supersonic Wave Drag of Thin Airfoils. Jour. Aero. Sci., vol. 13, no. 9, Sept. 1946, pp. 475-484.

5. Evvard, John C.: Theoretical Distribution of Lift on Thin Wings at Supersonic Speeds (An Extension). NACA TN 1585, 1948.

6. Whittaker, E. T., and Watson, G. N.: Modern Analysis. Univ. Press (Cambridge), 4th ed., 1935, p. 229.

7. Bosanquet, L. S.: On Abel's Integral Equation and Fractional Integrals. Proc. London Math. Soc., vol. 31, ser. 2, 1930, pp. 134-143.

8. Schlichting, H.: Airfoil Theory at Supersonic Speed. NACA TM 897, 1939.

9. Jones, Robert T.: Thin Oblique Airfoils at Supersonic Speed. NACA Rep. 851, 1946. (Formerly NACA TN 1107.)

10. Glauert, H.: The Elements of Aerofoil and Airscrew Theory. Cambridge Univ. Press, 1937, p. 93.

11. de Haan, D. Bierens: Nouvelles Tables d'Integrales Definies. G. E. Stechert & Co. (New York), 1939.

12. Goodman, Theodore R.: The Lift Distribution on Conical and Nonconical Flow Regions of Thin Finite Wings in a Supersonic Stream. Jour. Aero. Sci., vol. 16, no. 6, June 1949, pp. 365-374.

13. Mirels, Harold: Lift-Cancellation Technique in Linearized Supersonic Wing Theory. NACA TN 2145, 1950.

14. Peirce, B. O.: A Short Table of Integrals. Ginn and Co., 3d ed., 1929, p. 72.

15. Jahnke, Eugen, and Emde, Fritz: Tables of Functions. Dover Pub., 4th ed., 1945, pp. 96-97.

16. Franklin, Philip: A Treatise on Advanced Calculus. John Wiley & Sons, Inc., 1940, pp. 274-276, 334, 335.

17. Hadamard, Jacques: Lectures on Cauchy's Problem in Linear Partial Differential Equations. Yale Univ. Pres, 1923.

18. Evvard, John C.: Use of Source Distributions for Evaluating Theoretical Aerodynamics of Thin Finite Wings at Supersonic Speeds. NACA Rep. 951, 1950.

19. Mirels, Harold, and Haefeli, Rudolph C.: Line-Vortex Theory for Calculation of Supersonic Downwash. NACA TN 1925, 1949.

1317

20. Mirels, Harold, and Haefeli, Rudolph C.: The Calculation of Supersonic Downwash Using Line Vortex Theory. Jour. Aero. Sci., vol. 17, no. 1, Jan. 1950, pp. 13-21.

21. Evvard, John C.: Distribution of Wave Drag and Lift in the Vicinity of Wing Tips at Supersonic Speeds. NACA TN 1382, 1947.

1317

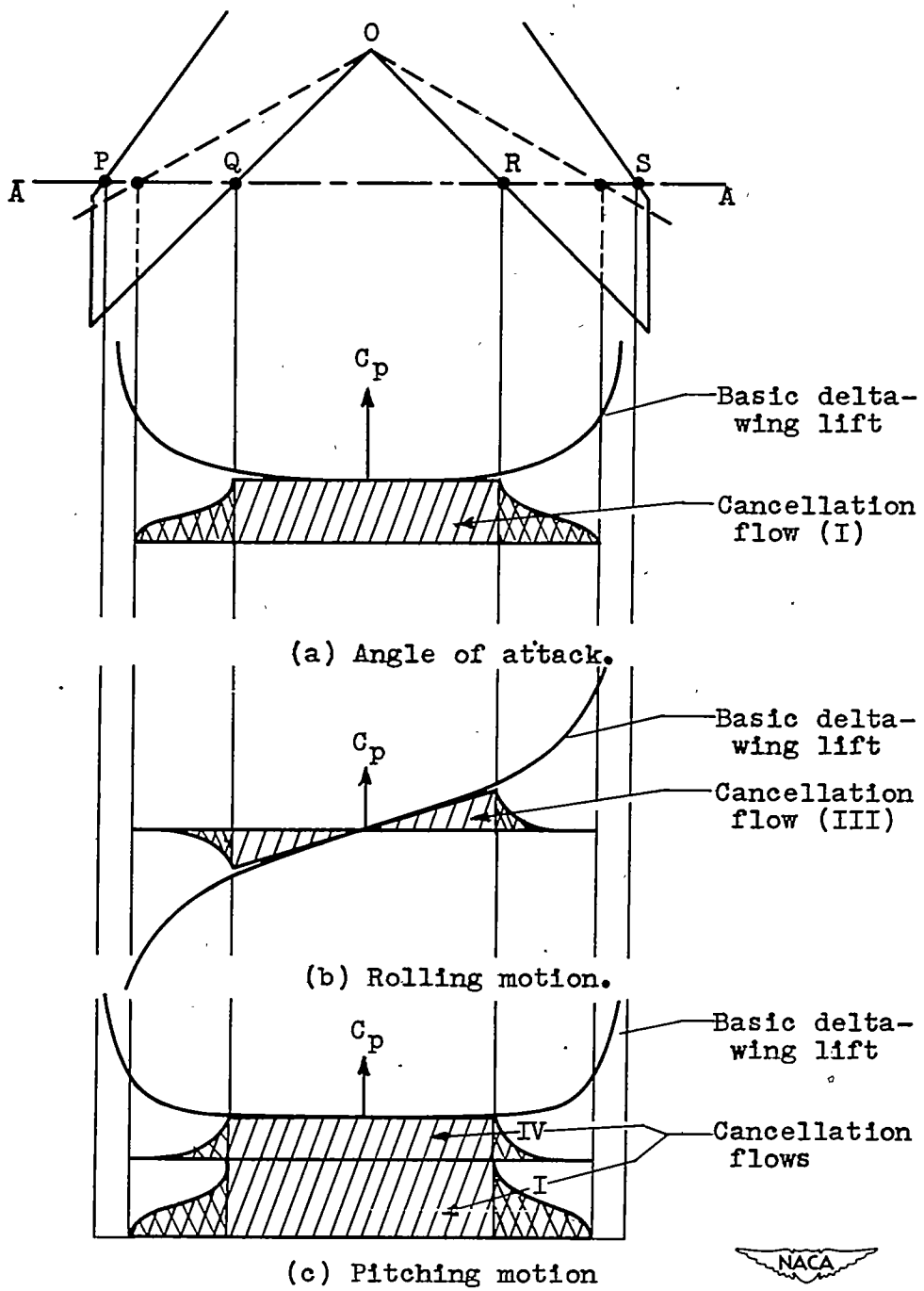

Figure 1. - Sweptback wing showing basic delta-wing load distribution along section A-A and approximate cancellation of this load behind wing by superposition of special flows. Special flows are plotted with reversed sign. Cross-hatched areas represent induced changes in loading ahead of trailing edge.

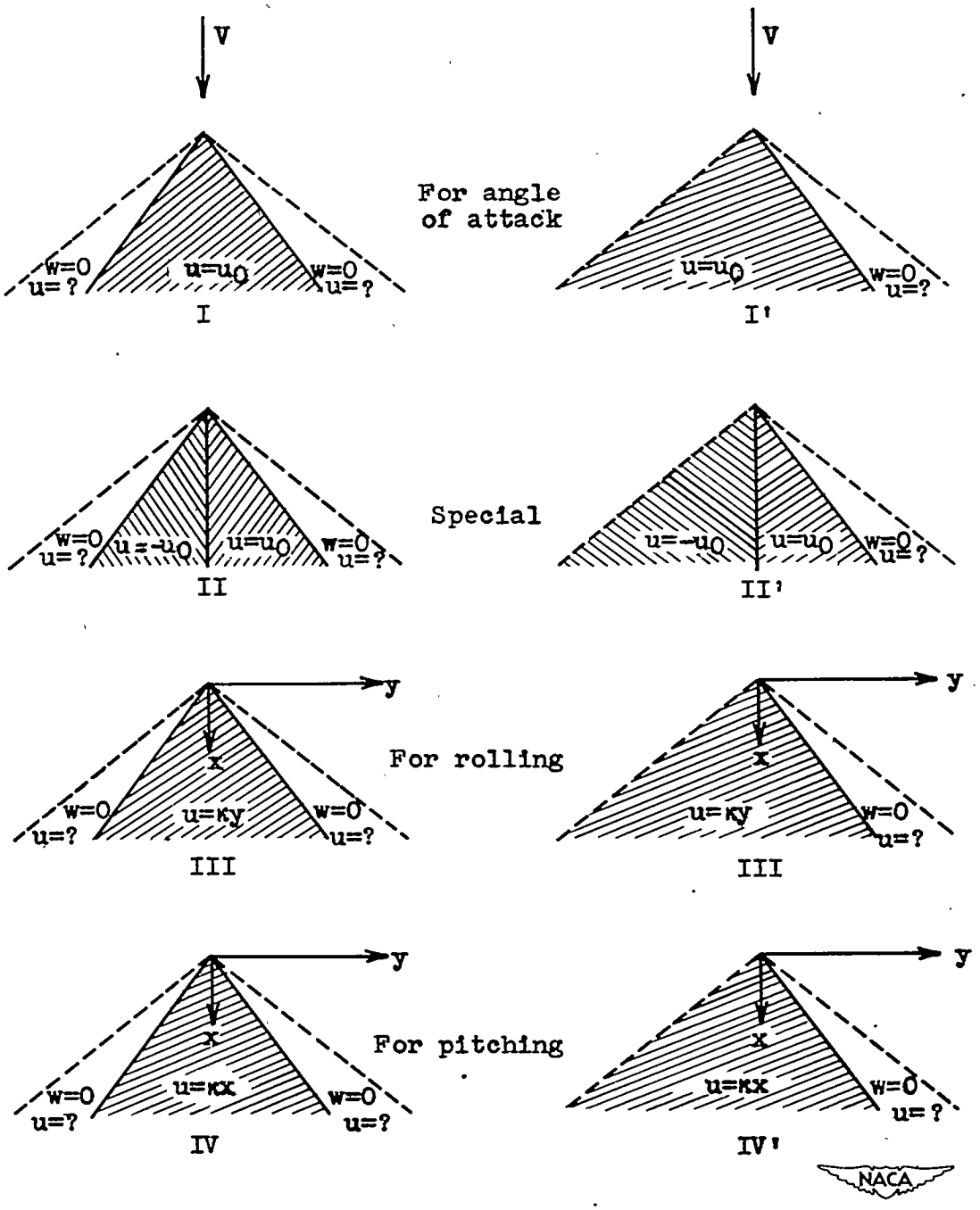

Figure 2. - Flows used for cancellation of lift behind trailing edge of sweptback wing, I, II, III, and IV, and related flows I', II', III', and IV'.

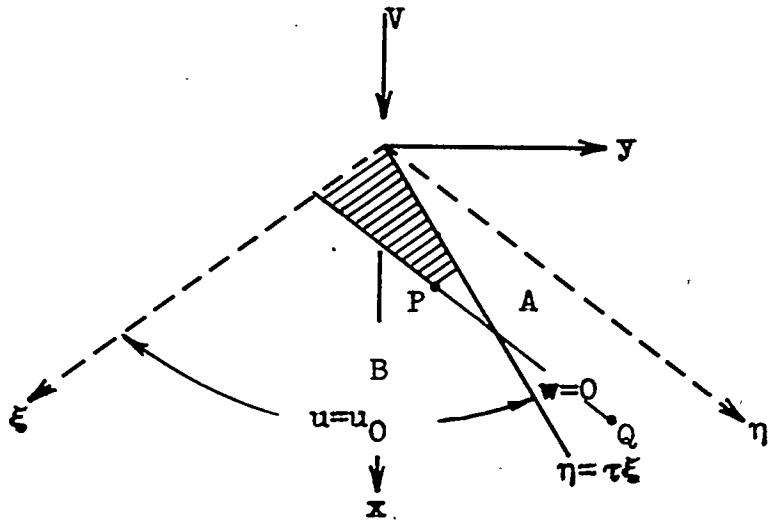

Figure 3. - Data for flow I'.

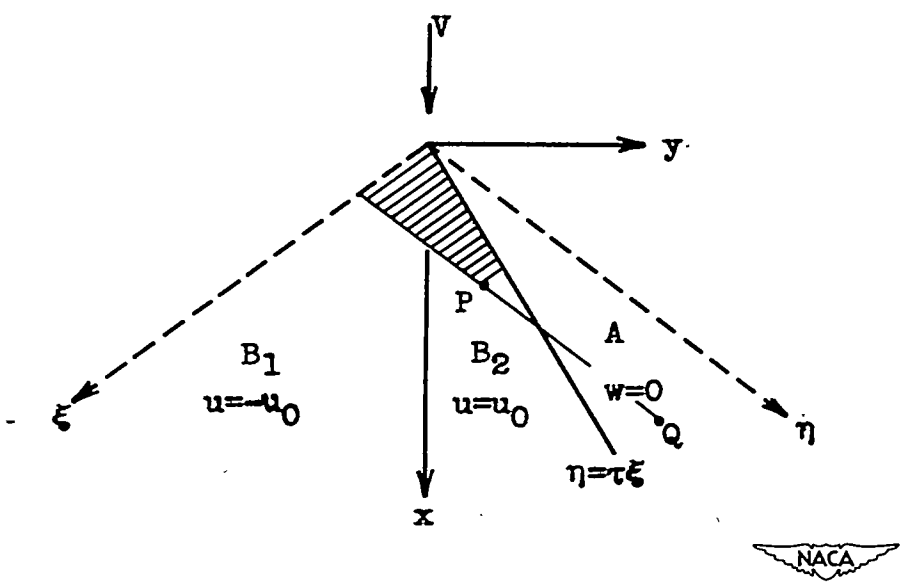

Figure 4. - Data for flow II'.

1317

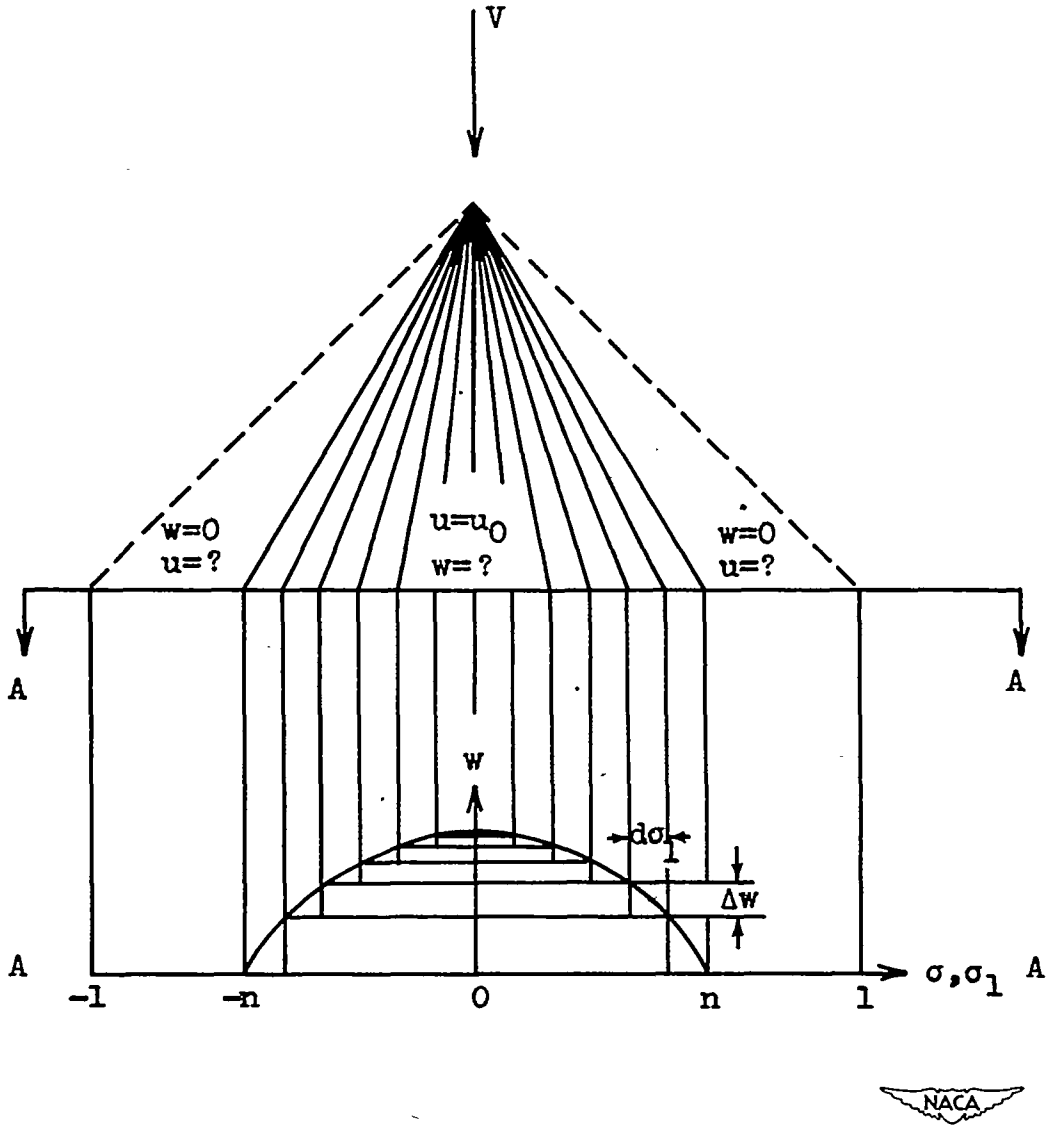

Figure 5. - Superposition of elementary source-sheet sectors to build up flow I. (Schematic)

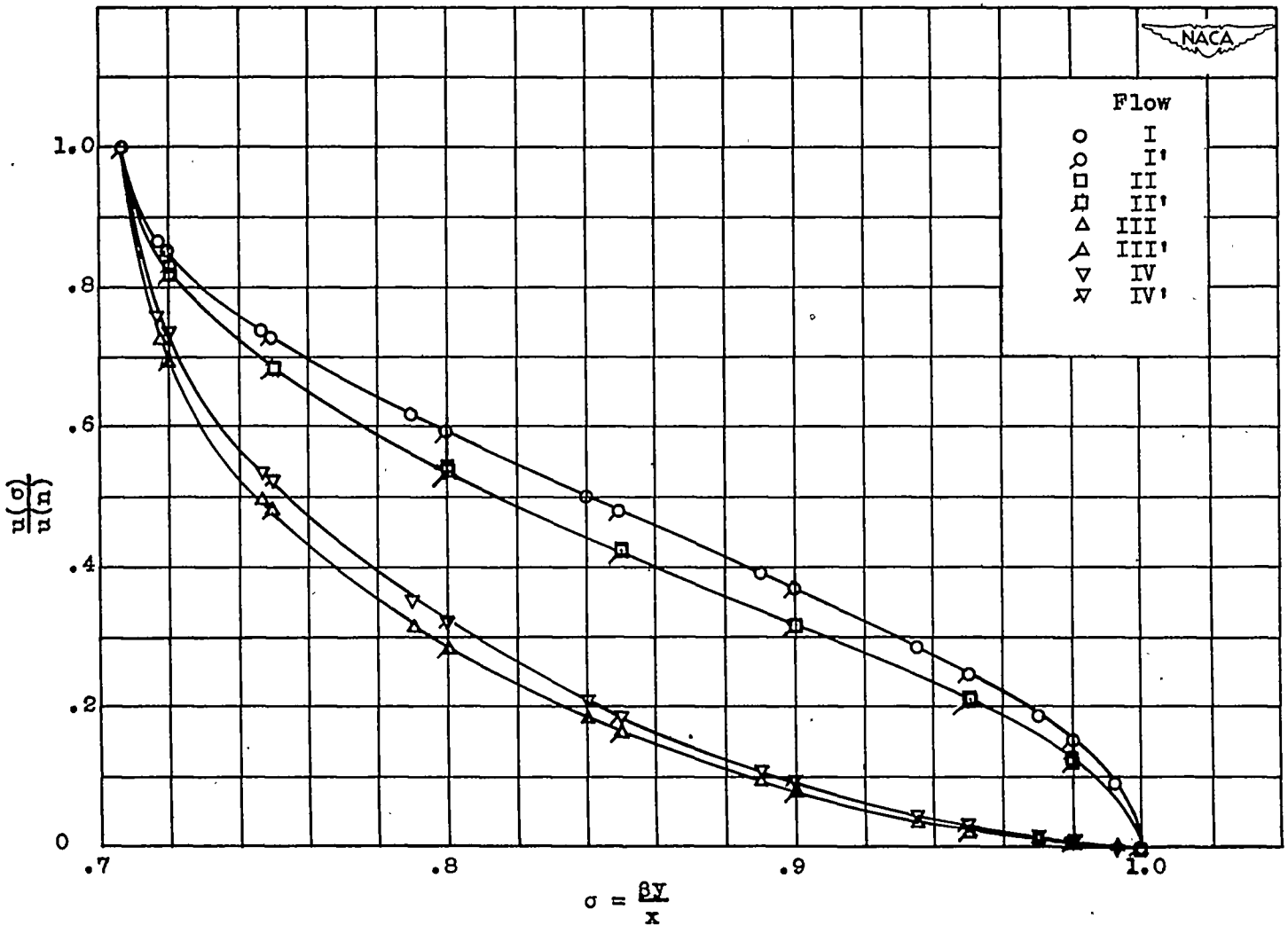

Figure 6. - Comparison of distribution of u velocity (proportional to lift) in right-hand w=0 regions ($n \leq \sigma \leq 1$) of flows of figure 2. n=0.707.

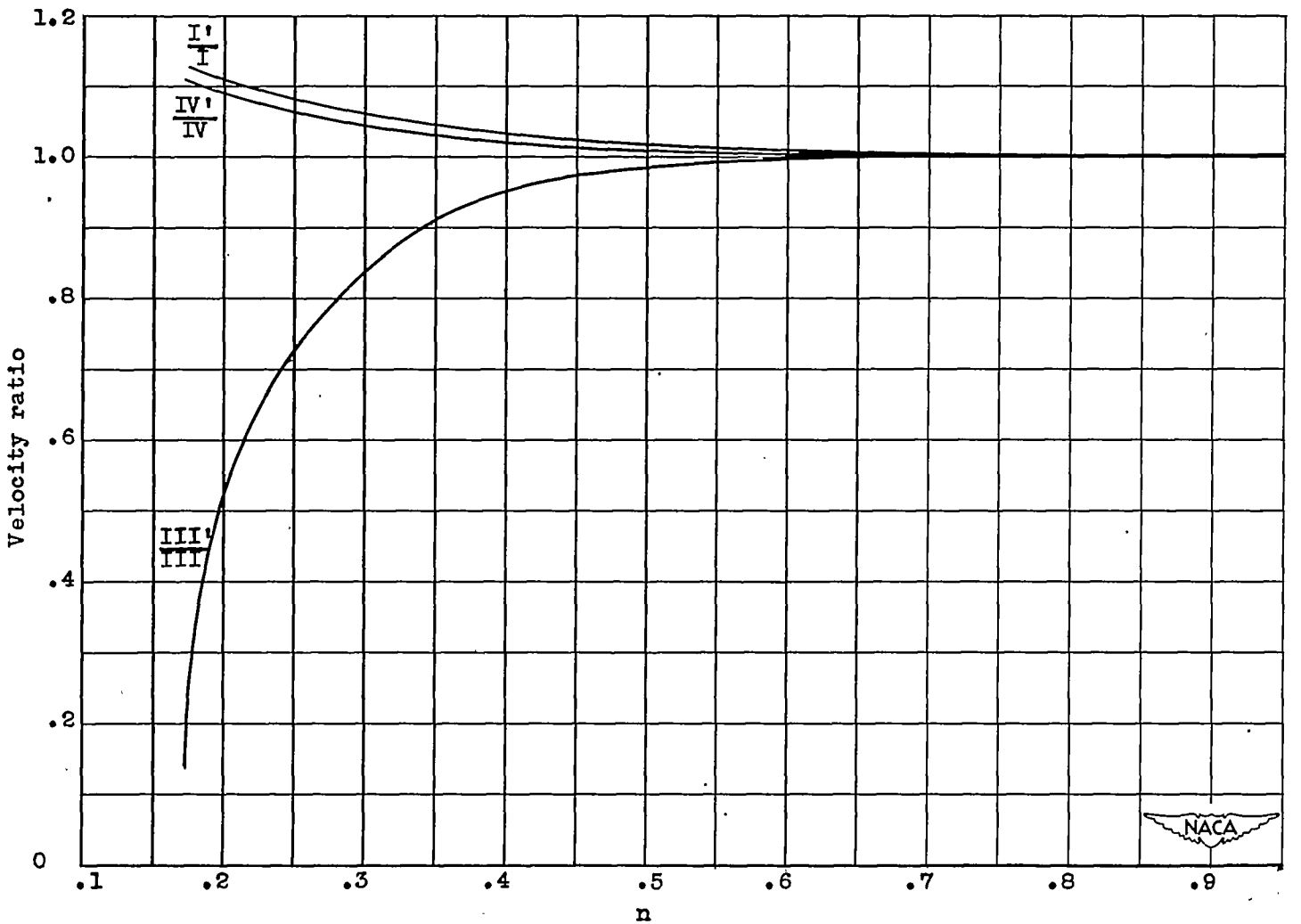

Figure 7. - Ratio of u velocity as function of n for pairs of flows I' and I, III' and III, and IV' and IV at value of $\sigma \equiv \frac{\beta y}{x}$ defined by $\varphi \equiv \sin^{-1} \sqrt{\frac{1-\sigma^2}{1-n^2}} = 60^\circ$.

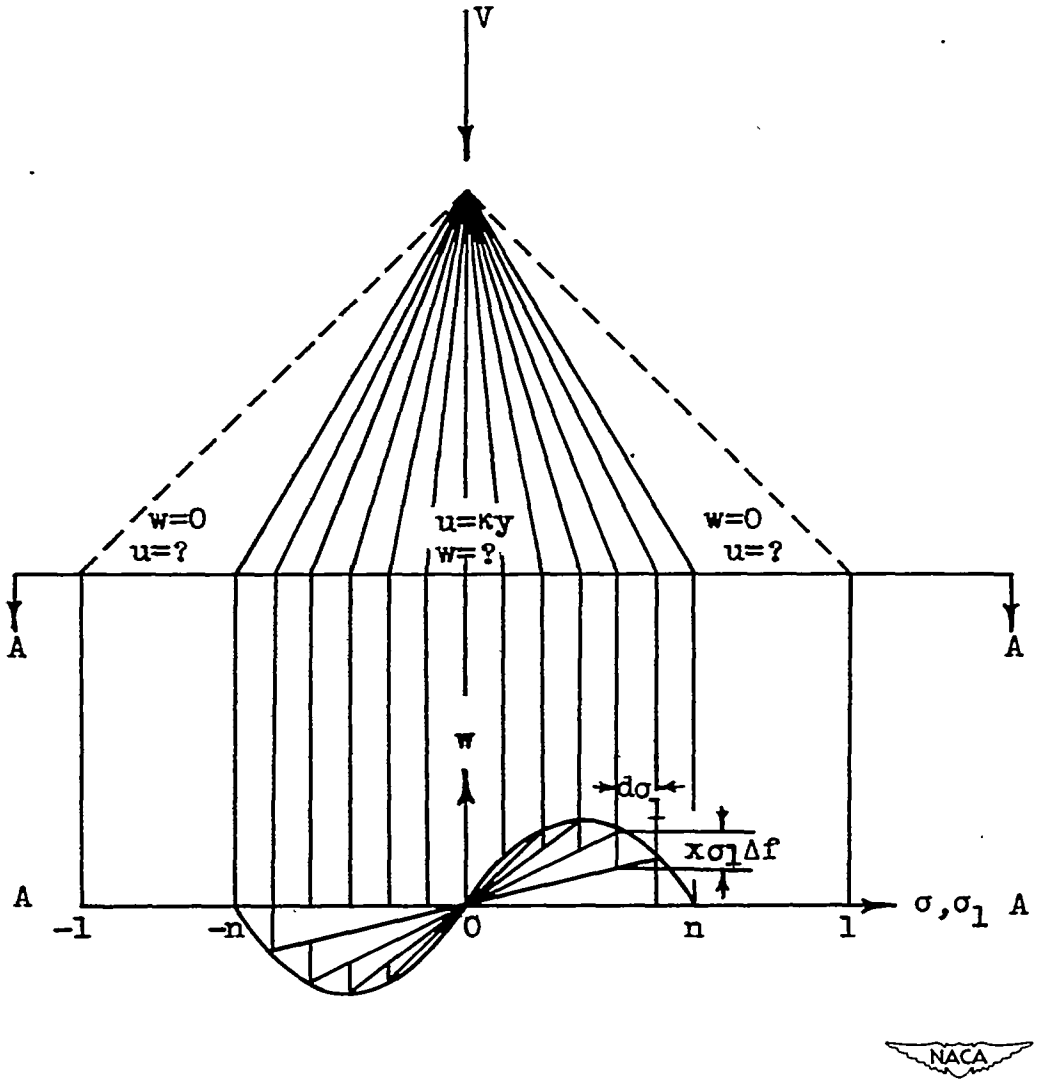

Figure 8. - Superposition of elementary source-sheet sectors to build up flow III. (Schematic.)

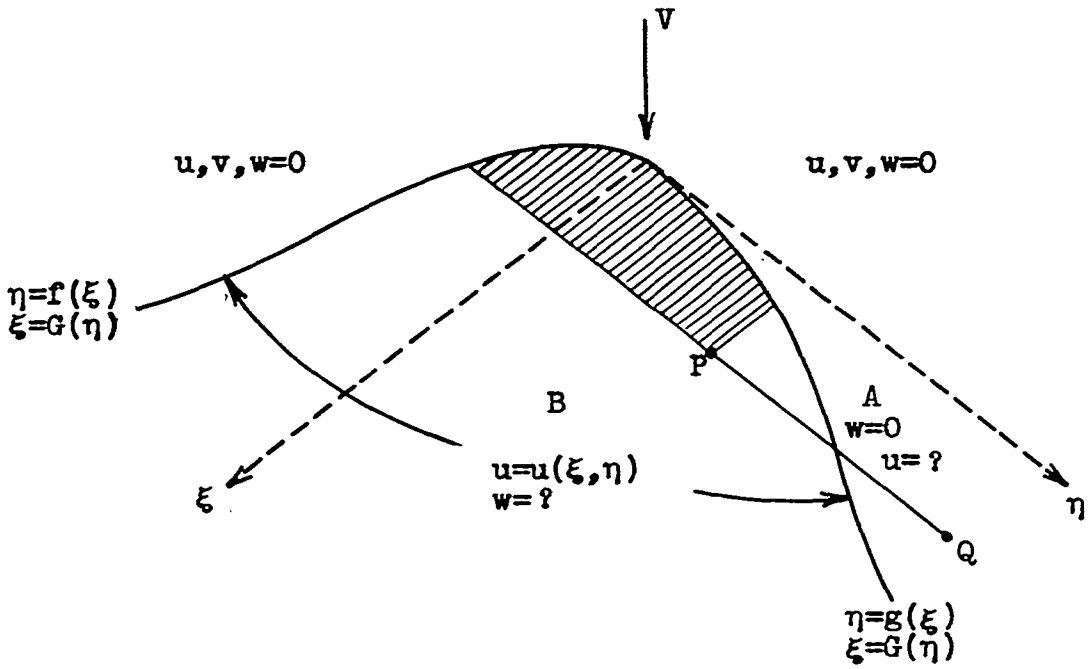

(a) Case (a).

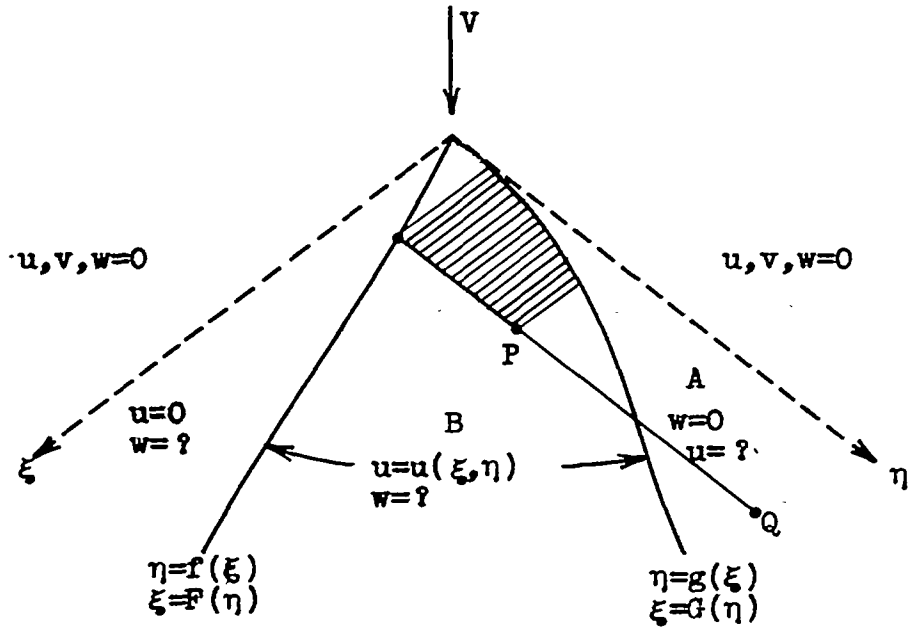

(b) Case (b).

Figure 9. - Data for Goodman-Mirels generalized cancellation flow.

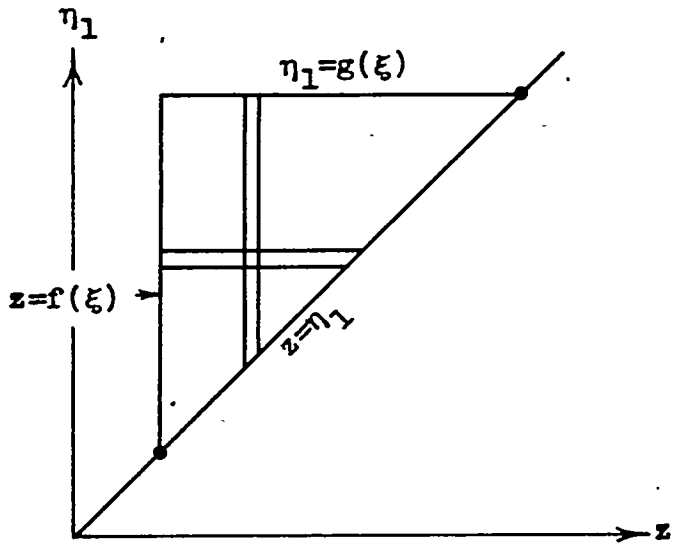

Figure 10. - Scheme for interchange of order of integration in equation (E8).

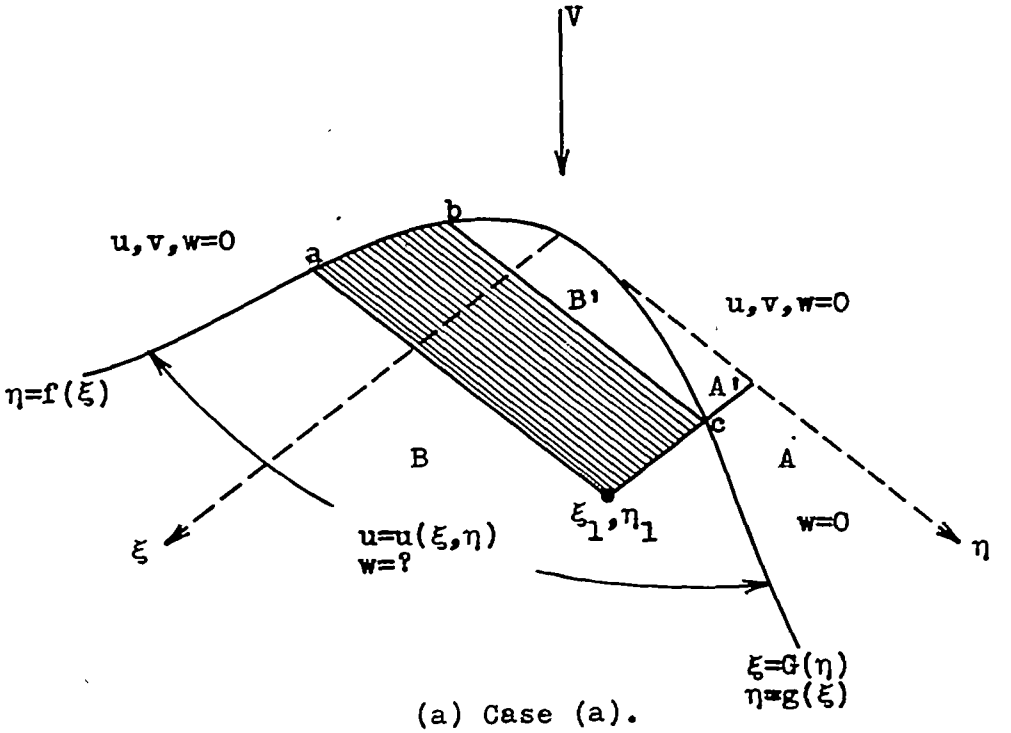

(a) Case (a).

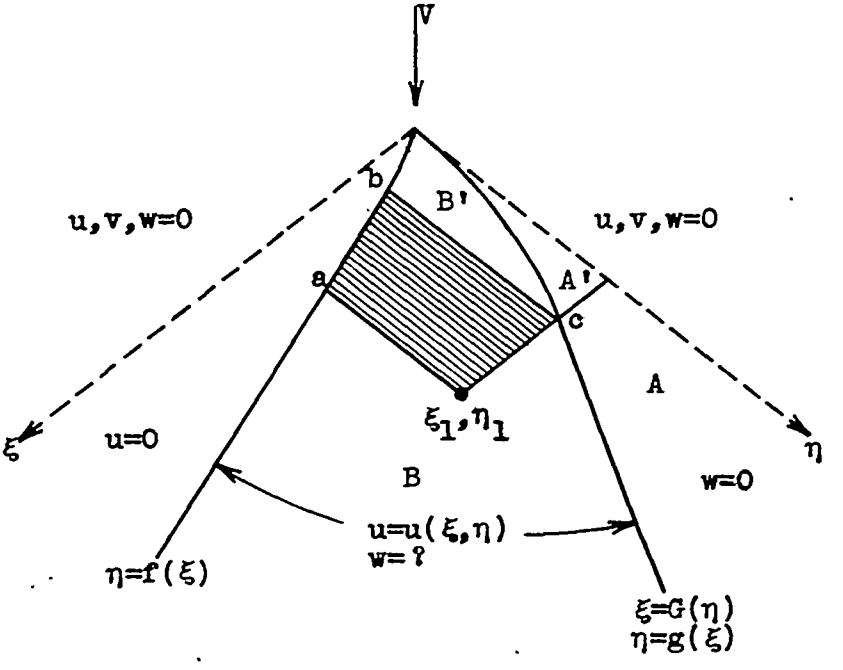

(b) Case (b).

Figure 11. - Area of integration for doublets of equation (E14). Cases of figure 9.

NACA-Langley - 8-18-50 - 1075