NACA TN 2163 8858

TECH LIBRARY KAFB, NM
0065162

NATIONAL ADVISORY COMMITTEE FOR AERONAUTICS

TECHNICAL NOTE 2163

CRITICAL STRESS OF PLATE COLUMNS

By John C. Houbolt and Elbridge Z. Stowell

Langley Aeronautical Laboratory
Langley Air Force Base, Va.

Washington
August 1950

TECH LIBRARY KAFB, NM

0065162

NATIONAL ADVISORY COMMITTEE FOR AERONAUTICS

TECHNICAL NOTE 2163

CRITICAL STRESS OF PLATE COLUMNS

By John C. Houbolt and Elbridge Z. Stowell

SUMMARY

Solutions are given for the elastic buckling stress of flat rectangular plates with simply supported or fixed ends when loaded as columns. For the case of simply supported ends, an exact solution is made; for the case of fixed ends, an approximate solution is made by use of a power series in conjunction with Lagrangian undetermined multipliers. The critical stress is given in terms of the Euler value of the load multiplied by a coefficient which depends on the width-length ratio of the column and varies for practical purposes between the values 1 and $\frac{1}{1 - \mu^2}$, where μ is Poisson's ratio of the material.

The results showed that the plates may be considered as "columns," as the term is used in ordinary engineering practice, when the width-length ratio is less than 0.1 and may be considered as infinitely wide plates $\left(\text{Euler column value times coefficient of } \frac{1}{1 - \mu^2}\right)$ when the width-length ratio is greater than 10. For intermediate width-length ratios, the appropriate coefficient may be found from a chart.

The procedure for determining the critical stress of plate columns with intermediate end fixities is also given. The study also indicates the solution for the local buckling of angle or cruciform sections.

INTRODUCTION

The Euler equation for column buckling is recognized to be correct for a very narrow rectangular plate loaded as a column (reference 1) and is generally assumed to be modified by a factor $\frac{1}{1 - \mu^2}$ when applied to a very wide plate. This factor is introduced on the basis that the end supports force the plate to buckle into a cylindrical surface over most of its width, and thereby the bending stiffness is

increased from EI to $\frac{EI}{1 - \mu^2}$. (See reference 2.) For the very narrow plate, the effect of the end supports is negligible because only a small region at each end is affected (St. Venant's principle). Thus, the critical stress may change as much as 10 percent from the Euler value, depending on whether the plate column is very narrow or very wide.

The purpose of this study is to investigate the effect that width has on the buckling stress in the transition from a very narrow to a very wide plate column. Solutions are made for both the case of simply supported ends and for the case of fixed ends, and the means for approximately taking into account elastically restrained ends is indicated.

RESULTS AND CONCLUSIONS

The solutions for the buckling stress of a flat plate column with simply supported ends and with fixed ends are given in appendixes A and B, respectively. Figure 1 shows the coordinate system and the plate dimensions that are used in the analyses. For the plate column with simply supported ends, an exact solution is made by solving the differential equation that expresses equilibrium of the plate when slightly buckled. For the case of fixed ends, however, an exact solution is not possible because a deflection function satisfying both the differential equation and the boundary conditions is not known. An approximate solution for this case is therefore made by use of the energy method.

The results of the analyses showed that the critical stress of a plate loaded as a column may be found from the modified Euler equation

$$\sigma_{cr} = \frac{\nu}{1 - \mu^2} \frac{\pi^2 E}{\left(\frac{L}{\rho\sqrt{c}}\right)^2}$$

where

ν coefficient depending upon ratio $\frac{b}{L/\sqrt{c}}$

μ Poisson's ratio

E elastic modulus

L actual length of plate

b plate width

t column thickness

ρ radius of gyration $\left(t/\sqrt{12}\right)$

c restraint coefficient (c = 1 for simply supported ends; c = 4 for fixed ends)

A band of values of ν is shown in figure 2 for $\mu = 0.30$. The lower limit of the band is the curve for simply supported ends (c = 1) and the upper limit of the band is the corresponding curve for fixed ends (c = 4). The percentage increase in critical stress above the Euler value is seen to be slightly greater for a fixed-end plate column than for a simply supported plate column. This greater increase in stress for the fixed-end case arises because not only do the end supports provide restraint against transverse bending but they provide restraint where the tendency for this bending to occur is large. Intermediate end conditions $(1 < c < 4)$ would be represented by similar curves within the band.

Inspection of the band shows that the difference between ν for fixed ends and ν for simply supported ends is nowhere greater than 2 percent of the ordinate. This difference represents the maximum error in ν and, consequently, critical stress that may result from use of a curve for the wrong fixity. Use of the bottom curve (c = 1) to calculate the critical stress will evidently be slightly conservative for all cases in which c is greater than 1.

In figure 2, as $\frac{b}{L/\sqrt{c}}$ approaches zero, all values of ν approach $1 - \mu^2$ and the equation for critical stress reduces to Euler's equation. As $\frac{b}{L/\sqrt{c}}$ becomes large, all values of ν approach, for practical purposes, the value unity, and the equation for critical stress reduces to Euler's equation modified by a factor $1 - \mu^2$. In a general way, for values of $\frac{b}{L/\sqrt{c}}$ less than 0.1, the structure is a "column" in the conventional sense; whereas for values of $\frac{b}{L/\sqrt{c}}$ greater than 10, the structure is an "infinitely wide plate" because it requires the plate modulus.

A point of theoretical interest is worthy of mention, however, in regard to the curves shown in figure 2. These curves do not approach asymtotically the value of 1 for large values of b/L, as might ordinarily be expected; rather, they approach a value slightly lower

than 1. In appendix A, for example, the asymtotic value of ν for a pin-end plate column with a Poisson ratio of 0.30 is shown to be 0.9962. Thus, no matter how wide the plate, the critical-buckling coefficient can never quite reach the full infinitely wide plate value of unity. This reduction may be explained by considering the free unloaded edges. Some restraint against the tendency for these edges to curl would have to be provided in order to force the plate to buckle in a truly cylindrical surface, which is necessary to achieve the buckling coefficient of 1. In the absence of this restraint, the free edges are evidently the weakest part of the plate, with the consequence that buckling occurs at a slightly reduced stress.

In order to illustrate the effect of Poisson's ratio on the curves for ν, a series of three curves is shown in figure 3 for simply supported ends ($c = 1$) for values of Poisson's ratio of 0.25, 0.30, and 0.35. For large values of $\frac{b}{L/\sqrt{c}}$, all curves approach, for practical purposes, the value of unity; however, for small values of $\frac{b}{L/\sqrt{c}}$, the curves separate in order to approach their individual values of $1 - \mu^2$. The circled points on the curve for $\mu = 0.30$ represent points obtained by a different method from that used to derive the rest of the curve; the method is described in appendix B.

Langley Aeronautical Laboratory
National Advisory Committee for Aeronautics
Langley Air Force Base, Va., May 19, 1950

APPENDIX A

CRITICAL STRESS OF A PLATE COLUMN WITH SIMPLY SUPPORTED ENDS

The buckling stress of a flat plate column may be determined by solving the differential equation that expresses equilibrium of the plate when slightly buckled. Figure 1 shows the coordinate system and the plate dimensions that are used in the analysis.

The differential equation for equilibrium of a flat plate under longitudinal direct stress is (reference 3, p. 305)

$$D\left(\frac{\partial^4 w}{\partial x^4} + 2\frac{\partial^4 w}{\partial x^2 \partial y^2} + \frac{\partial^4 w}{\partial y^4}\right) + \sigma_{cr} t \frac{\partial^2 w}{\partial x^2} = 0 \tag{A1}$$

where

w deflection of plate at (x, y)

D bending stiffness of plate $\left(\frac{Et^3}{12\left(1 - \mu^2\right)}\right)$

E elastic modulus

t thickness of plate

μ Poisson's ratio

σ_{cr} applied compressive stress at buckling

The critical stress σ_{cr} may be given in the form

$$\sigma_{cr} = \nu \frac{\pi^2 D}{L^2 t} \tag{A2}$$

where L is the length of the plate and ν is a numerical factor to be determined. Substitution of this expression for σ_{cr} into equation (A1) leads to a modified form

$$\frac{\partial^4 w}{\partial x^4} + 2\frac{\partial^4 w}{\partial x^2 \partial y^2} + \frac{\partial^4 w}{\partial y^4} + \nu \frac{\pi^2}{L^2} \frac{\partial^2 w}{\partial x^2} = 0 \tag{A3}$$

The boundary conditions to be satisfied, where b is the plate width, are

$$(w)_{\substack{x=0\\x=L}} = 0 \tag{A4a}$$

$$\left(\frac{\partial^2 w}{\partial x^2} + \mu\frac{\partial^2 w}{\partial y^2}\right)_{\substack{x=0\\x=L}} = 0 \tag{A4b}$$

$$\left(\frac{\partial^2 w}{\partial y^2} + \mu\frac{\partial^2 w}{\partial x^2}\right)_{y=\pm\frac{b}{2}} = 0 \tag{A4c}$$

$$\left[\frac{\partial^3 w}{\partial y^3} + (2 - \mu)\frac{\partial^3 w}{\partial x^2 \partial y}\right]_{y=\pm\frac{b}{2}} = 0 \tag{A4d}$$

Differential equations (A3) and conditions (A4a) and (A4b) are satisfied identically by either

$$w = \left(P \cosh \frac{\alpha y}{b} + Q \cosh \frac{\beta y}{b}\right) \sin \frac{\pi x}{L} \tag{A5a}$$

or

$$w = \left(R \sinh \frac{\alpha y}{b} + S \sinh \frac{\beta y}{b}\right) \sin \frac{\pi x}{L} \tag{A5b}$$

where P, Q, R, and S are coefficients which depend on the boundary conditions and

$$\alpha = \frac{\pi b}{L}\sqrt{1 + \sqrt{\nu}}$$

$$\beta = \frac{\pi b}{L}\sqrt{1 - \sqrt{\nu}}$$

Equation (A5a) represents the deflection surface for a symmetrical type of buckling and equation (A5b) represents an antisymmetrical type of buckling. Substitution of these two deflection equations successively into boundary conditions (A4c) and (A4d) leads to two stability criteria, one for each type of buckling:

For symmetrical buckling,

$$\sqrt{1 + \sqrt{\nu}}\left(1 - \mu - \sqrt{\nu}\right)^2 \tanh \frac{\alpha}{2} - \sqrt{1 - \sqrt{\nu}}\left(1 - \mu + \sqrt{\nu}\right)^2 \tanh \frac{\beta}{2} = 0 \tag{A6a}$$

For antisymmetrical buckling,

$$\sqrt{1 + \sqrt{\nu}}\left(1 - \mu - \sqrt{\nu}\right)^2 \tanh \frac{\beta}{2} - \sqrt{1 - \sqrt{\nu}}\left(1 - \mu + \sqrt{\nu}\right)^2 \tanh \frac{\alpha}{2} = 0 \tag{A6b}$$

Solutions are obtained by assigning a value to b/L and adjusting the value of ν until equation (A6a) or equation (A6b) is satisfied. Both experience and calculation show that a lower value of ν results from satisfying equation (A6a); that is, the buckling is the symmetrical type. If by some means the center line is held fixed (as in a cruciform) then the criterion (A6b) applies.

The values of ν for symmetrical buckling are plotted against $\frac{b}{L/\sqrt{c}}$ in figure 2. The factor c is the column-end fixity coefficient ($c = 1$ for simply supported ends; $c = 4$ for fixed ends) and has been introduced to allow for the approximate treatment of plate columns with intermediate end restraints. The following modified Euler equation introduces the factor c:

$$\sigma_{cr} = \frac{\nu}{1 - \mu^2} \frac{\pi^2 E}{\left(\frac{L}{\rho\sqrt{c}}\right)^2} \tag{A7}$$

where $\frac{\pi^2 E}{\left(\frac{L}{\rho\sqrt{c}}\right)^2}$ is the Euler value for a column with restrained ends.

For simply supported ends ($c = 1$), equation (A7) reduces precisely to the critical buckling stress given by equation (A2).

Of interest is the limiting value of ν as b/L approaches zero. If equation (A6a) is evaluated in the limit as b/L approaches zero the buckling coefficient of $1 - \mu^2$, which applies for a narrow plate column, is found directly. Of greater theoretical interest, however, is the case where b/L approaches infinity. If b/L is set equal to infinity and ν is taken as 1, as might ordinarily be expected for this case, the left side of equation (A6a) reduces to $2\mu^2$. The

value $\nu = 1$ is therefore not a solution for the infinitely wide case. If, however, b/L is set equal to infinity (assuming $\nu \neq 1$), equation (A6a) reduces to

$$\sqrt{1 + \sqrt{\nu}}\left(1 - \mu - \sqrt{\nu}\right)^2 - \sqrt{1 - \sqrt{\nu}}\left(1 - \mu + \sqrt{\nu}\right)^2 = 0 \tag{A8}$$

For the case of $\mu = 0.30$, this equation yields a value of $\nu \doteq 0.9962$. Theoretically, therefore, the buckling coefficient of unity (corresponding to cylindrical buckling) is never reached for an infinitely wide column.

APPENDIX B

CRITICAL STRESS OF A PLATE COLUMN WITH FIXED ENDS

An exact solution for the critical stress of a plate column with fixed ends cannot be made because a deflection function which satisfies equation (A3) and all the boundary conditions of a fixed-end plate is not known. By use of the energy method, however, an approximate solution can be made. The coordinate system (see fig. 1) is the same as that used in appendix A.

Inasmuch as the unloaded edges of the plate column are free it has been found convenient to assume a symmetrical deflection function in the form

$$w = \sum_{n=0,1,2,\ldots}\left[a_n + b_n\left(\frac{2y}{b}\right)^2 + c_n\left(\frac{2y}{b}\right)^4 + d_n\left(\frac{2y}{b}\right)^6\right]\cos\frac{2n\pi x}{L} \tag{B1}$$

This equation is sufficiently general and automatically satisfies the condition that the slope must be zero at the ends. From the condition that the deflection must be zero at the ends, the following relation is found:

$$\sum_{n=0,1,2,\ldots}\left[a_n + b_n\left(\frac{2y}{b}\right)^2 + c_n\left(\frac{2y}{b}\right)^4 + d_n\left(\frac{2y}{b}\right)^6\right] = 0 \tag{B2}$$

This equation must be true regardless of the value of y; hence the coefficients of individual powers of y must each be equal to zero. Thus,

$$\left.\begin{aligned}\sum a_n &= 0\\ \sum b_n &= 0\\ \sum c_n &= 0\\ \sum d_n &= 0\end{aligned}\right\} \tag{B3}$$

The total potential energy U of the system when buckling occurs may be given by the expression

$$U = V - T \tag{B4}$$

where V represents the energy of bending and T represents the work done by the external axial forces. The expression for U in terms of the deflection is

$$U = \frac{D}{2} \int_0^L \int_{-\frac{b}{2}}^{\frac{b}{2}} \left[\left(\frac{\partial^2 w}{\partial x^2}\right)^2 + \left(\frac{\partial^2 w}{\partial y^2}\right)^2 + 2\mu \frac{\partial^2 w}{\partial x^2} \frac{\partial^2 w}{\partial y^2} + 2(1 - \mu)\left(\frac{\partial^2 w}{\partial x \partial y}\right)^2 - \frac{\sigma_{cr} t}{D}\left(\frac{\partial w}{\partial x}\right)^2\right] dy\, dx \tag{B5}$$

In accordance with the minimum potential-energy principle the energy U is minimized with respect to the deflection coefficients (a, b, c, and d), subject to conditions (B3). These conditions are introduced in the minimization process by the use of Lagrangian undetermined multipliers.

It is convenient to express σ_{cr} in terms of the dimensionless buckling coefficient ν by means of the notation

$$\frac{\sigma_{cr} t}{D} = 4\nu \frac{\pi^2}{L^2} \tag{B6}$$

Substitution of this equation and of the expression for w, equation (B1), into equation (B5) and addition of conditions (B3) by undetermined multipliers results in the following expression which is to be minimized:

$$F = \sum_{n=0,1,2,\ldots} n^2 \left[4\left(n^2 - \nu\right) f_1 + \frac{4}{n^2}\left(\frac{L}{\pi b}\right)^4 \left(1 + \delta_{no}\right) f_2 - 8\mu\left(\frac{L}{\pi b}\right)^2 f_3 + 8(1 - \mu)\left(\frac{L}{\pi b}\right)^2 f_4\right] + \alpha \sum a_n + \beta \sum b_n + \gamma \sum c_n + \delta \sum d_n \tag{B7}$$

where for $n \neq 0$

$$\delta_{no} = 0$$

and for $n = 0$

$$\delta_{no} = 1$$

and

$$\left.\begin{aligned}
f_1 &= a_n^2 + \frac{1}{5}b_n^2 + \frac{1}{9}c_n^2 + \frac{1}{13}d_n^2 + \frac{2}{3}a_nb_n + \frac{2}{5}a_nc_n + \frac{2}{7}a_nd_n + \\
&\qquad \frac{2}{7}b_nc_n + \frac{2}{9}b_nd_n + \frac{2}{11}c_nd_n \\
f_2 &= 4b_n^2 + \frac{144}{5}c_n^2 + 100d_n^2 + 16b_nc_n + 24b_nd_n + \frac{720}{7}c_nd_n \\
f_3 &= 2a_nb_n + 4a_nc_n + 6a_nd_n + \frac{2}{3}b_n^2 + \frac{12}{7}c_n^2 + \frac{30}{11}d_n^2 + \frac{14}{5}b_nc_n + \\
&\qquad \frac{32}{7}b_nd_n + \frac{42}{9}c_nd_n \\
f_4 &= \frac{4}{3}b_n^2 + \frac{16}{7}c_n^2 + \frac{36}{11}d_n^2 + \frac{16}{5}b_nc_n + \frac{24}{7}b_nd_n + \frac{16}{3}c_nd_n
\end{aligned}\right\} \tag{B8}$$

and α, β, γ, and δ are the undetermined multipliers. Taking the partial derivatives of F with respect to a_n, b_n, c_n, and d_n and equating them to zero, the following system of equations is obtained:

$$\left.\begin{aligned}
A_na_n + B_nb_n + C_nc_n + D_nd_n &= -\alpha \\
B_na_n + E_nb_n + F_nc_n + G_nd_n &= -\beta \\
C_na_n + F_nb_n + H_nc_n + J_nd_n &= -\gamma \\
D_na_n + G_nb_n + J_nc_n + L_nd_n &= -\delta
\end{aligned}\right\} \tag{B9}$$

where

$$A_n = 4n^2(n^2 - \nu)$$

$$B_n = \frac{n^2}{3}A_n - 8\mu mn^2$$

$$C_n = \frac{n^2}{5}A_n - 16\mu mn^2$$

$$D_n = \frac{n^2}{7}A_n - 24\mu mn^2$$

$$E_n = \frac{n^2}{5}A_n + 16\left(1 + \delta_{no}\right)m^2 + \frac{1}{3}\left[32(1 - \mu) - 16\mu\right]mn^2$$

$$F_n = \frac{n^2}{7}A_n + 32\left(1 + \delta_{no}\right)m^2 + \frac{1}{5}\left[64(1 - \mu) - 56\mu\right]mn^2$$

$$G_n = \frac{n^2}{9}A_n + 48\left(1 + \delta_{no}\right)m^2 + \frac{1}{7}\left[96(1 - \mu) - 128\mu\right]mn^2$$

$$H_n = \frac{n^2}{9}A_n + \frac{576}{5}\left(1 + \delta_{no}\right)m^2 + \frac{1}{7}\left[128(1 - \mu) - 96\mu\right]mn^2$$

$$J_n = \frac{n^2}{11}A_n + \frac{1440}{7}\left(1 + \delta_{no}\right)m^2 + \frac{1}{9}\left[192(1 - \mu) - 168\mu\right]mn^2$$

$$L_n = \frac{n^2}{13}A_n + 400\left(1 + \delta_{no}\right)m^2 + \frac{1}{11}\left[288(1 - \mu) - 240\mu\right]mn^2$$

and

$$m = \left(\frac{L}{\pi b}\right)^2$$

From the first of equations (B9) the fact that $\alpha = 0$ can be found by setting $n = 0$. This fact somewhat simplifies the procedure for determining the critical buckling stress.

The characteristic buckling value ν may be found with the aid of equations (B9) and equations (B3) as follows. For a given value of m the value of ν is assumed; the quantities $A_n \ldots L_n$ can then be found for any value of n. Insertion of the values of $A_n \ldots L_n$ in equations (B9) then permits the determination of $a_n \ldots d_n$ in terms of β, γ, and δ (because $\alpha = 0$). The only value which cannot be established is a_o, but this value may be considered to be indeterminate and is carried along as an unknown with β, γ, and δ. Substitution of the values of a_n, b_n, c_n, and d_n into equations (B3) gives four equations of the form

$$a_o + M_1\beta + N_1\gamma + P_1\delta = 0$$

$$M_2\beta + N_2\gamma + P_2\delta = 0$$

$$M_3\beta + N_3\gamma + P_3\delta = 0$$

$$M_4\beta + N_4\gamma + P_4\delta = 0$$

Nontrivial solutions result only when the determinant

$$\begin{vmatrix} M_2 & N_2 & P_2 \\ M_3 & N_3 & P_3 \\ M_4 & N_4 & P_4 \end{vmatrix} = 0$$

This determinant is not generally zero for the initially assumed value of ν. Other values are therefore assumed until a value is found which causes the determinant to be zero; the value causing the determinant to vanish is the characteristic buckling value for the ratio of L/b being considered. The variation of the buckling value ν with $\frac{b}{L/\sqrt{c}}$ is shown in figure 2. The factor c is introduced (as in appendix A, see equation (A7)) to allow for the approximate treatment of plate columns with restrained ends. When $c = 4$, which corresponds to the fixed-end condition treated in this appendix, the equation for buckling reduces simply to equation (B7). The buckling-stress coefficient for plate columns with intermediate end restraints would evidently be given by curves which fall within the narrow band indicated in the figure. Use of the bottom curve for $c = 1$ for all end restraints, however, would yield slightly conservative critical stresses for c greater than 1, with a maximum error in any case of only 2 percent.

An indication of the suitability of the form of the deflection equation (B1) can be obtained by performing an energy solution for a plate column with simply supported ends with the use of the following deflection function, which is similar in form to equation (B1),

$$w = \left[p + q\left(\frac{2y}{b}\right)^2 + r\left(\frac{2y}{b}\right)^4 + s\left(\frac{2y}{b}\right)^6\right] \sin\frac{\pi x}{L}$$

The circled points shown in figure 2 for the curve for $\mu = 0.30$ are typical results from this solution. For practical purposes, no essential difference is seen to exist between this solution and that obtained in appendix A from the differential equation. The values of ν for the clamped plate column, therefore, are probably of accuracy comparable to those for the simply supported plate column.

REFERENCES

1. Lundquist, Eugene E., Rossman, Carl A., and Houbolt, John C.: A Method for Determining the Column Curve from Tests of Columns with Equal Restraints against Rotation on the Ends. NACA TN 903, 1943.

2. Timoshenko, S.: Theory of Plates and Shells. McGraw-Hill Book Co., Inc., 1940, pp. 1-4.

3. Timoshenko, S.: Theory of Elastic Stability. McGraw-Hill Book Co., Inc., 1936, p. 305.

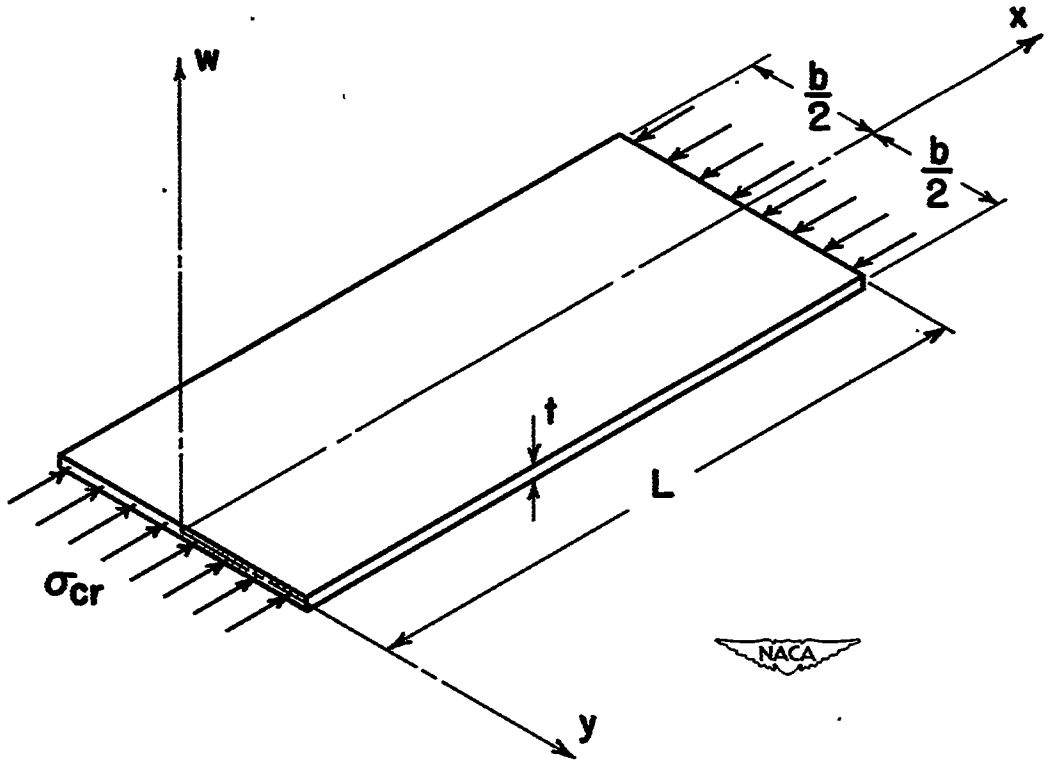

Figure 1. — Coordinate system and plate dimensions used in buckling analysis.

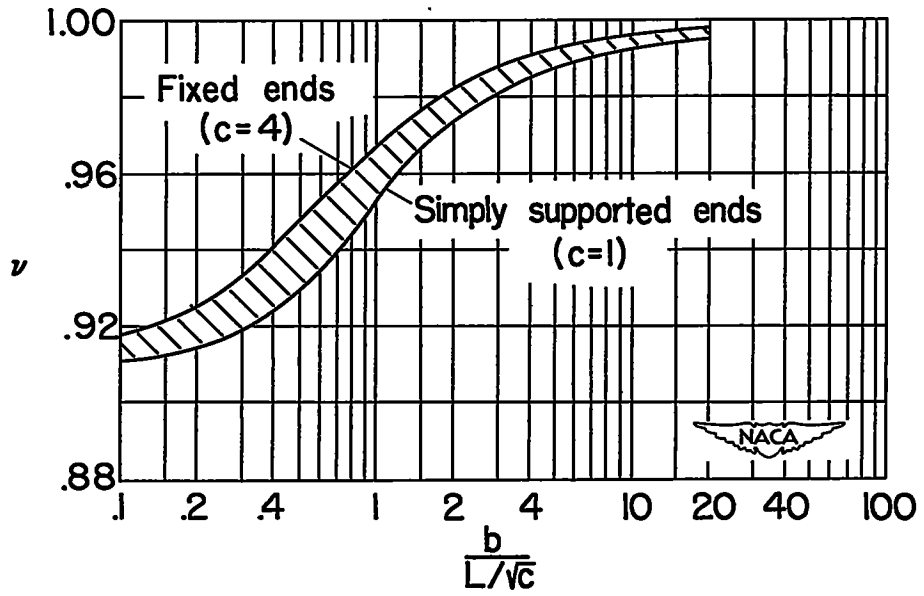

Figure 2.—Values of ν in the formula for critical stress $\sigma_{cr} = \frac{\nu}{1-\mu^2} \frac{\pi^2 E}{(L/\rho\sqrt{c})^2}$ with $\mu = 0.30$.

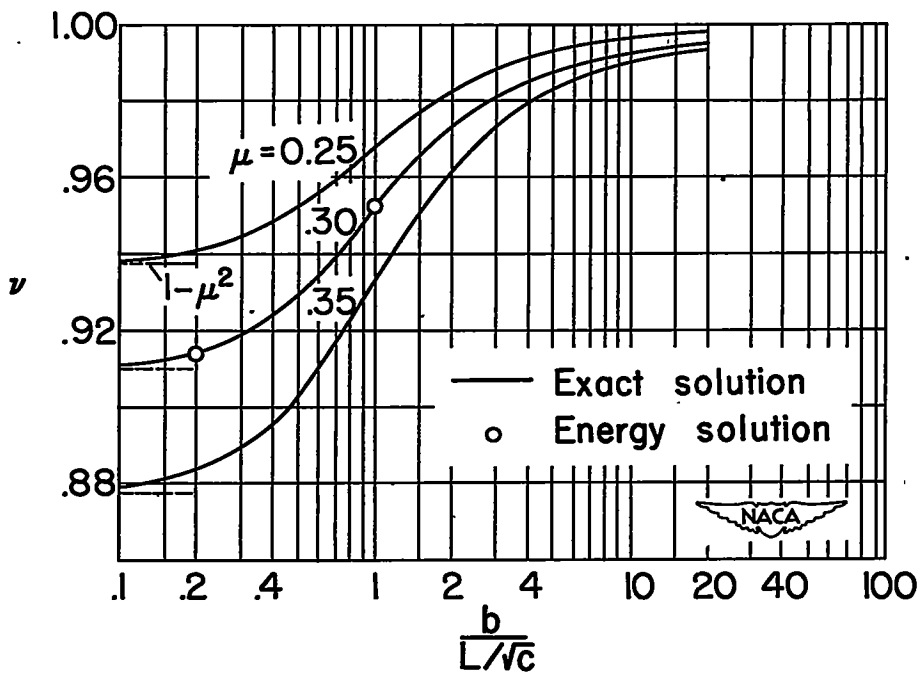

Figure 3.—Values of ν in the formula for critical stress $\sigma_{cr} = \frac{\nu}{1-\mu^2} \frac{\pi^2 E}{(L/\rho\sqrt{c})^2}$ with c=1 and $\mu = 0.25$, 0.30, and 0.35.

NACA-Langley - 8-4-50 - 1000