NACA TN 2194 8618

TECH LIBRARY KAFB, NM
0065176

NATIONAL ADVISORY COMMITTEE FOR AERONAUTICS

TECHNICAL NOTE 2194

THE NACA OIL-DAMPED V-G RECORDER

By Israel Taback

Langley Aeronautical Laboratory
Langley Air Force Base, Va.

Washington
October 1950

AFMDC
TECHNICAL LIBRARY

TECH LIBRARY KAFB, NM
0065176

NATIONAL ADVISORY COMMITTEE FOR AERONAUTICS

TECHNICAL NOTE 2194

THE NACA OIL-DAMPED V-G RECORDER

By Israel Taback

SUMMARY

An NACA oil-damped V-G recorder has been developed in which viscous damping of the accelerometer results in improved frequency response, reduces susceptibility to vibration, and eliminates the necessity for field adjustments of damping. The airspeed element has been temperature-compensated and approximately linearized. The new V-G recorder and its performance characteristics are described and the results of tests, which demonstrate the improvements over the older design in which the accelerometer unit was friction-damped, are presented.

INTRODUCTION

The effect of atmospheric turbulence on the loads encountered by aircraft in routine operational flight has for some time been studied by analyzing the records secured with the NACA V-G (velocity-gravity) recorder. This instrument, in widespread use by several aeronautical research agencies, records maximum values of normal acceleration as a function of airspeed. These measurements are used to derive the values of maximum effective gust velocities existing over particular airline routes, the maximum load values to which the aircraft is subjected, and the probability of exceeding various normal load factors in given types of service.

The original NACA V-G recorder in which the accelerometer unit was damped by dry friction could give satisfactory results when damped and installed in a proper manner. Acceptable records were secured if the accelerometer damping unit was adjusted correctly in each particular application. This adjustment, however, was difficult because of the requirement that the adjustment be made in the field by relatively inexperienced personnel and because changes in damping occurred with time and operating conditions. A study of the frequency-response characteristics of the recorder indicated that, even with the best adjustment of the damping it would be necessary to improve the response because of the advent of higher speed airplanes and the consequent higher rate of

rise and decay of accelerations caused by atmospheric gusts. The study of the optimum characteristics desired in an improved model resulted in the addition of a viscous damper which requires no adjustment in the field. The addition of this device eliminated the major limitations of the original model.

This paper has been prepared to acquaint the research agencies or other users of this instrument with the performance characteristics of the latest model NACA oil-damped V-G recorder.

DESCRIPTION OF INSTRUMENT

The NACA oil-damped V-G recorder consists of a temperature-compensated airspeed unit and an oil-damped acceleration mechanism which record forward velocity and simultaneous values of normal acceleration of the airplane in which it is installed. Recording is accomplished by means of a stylus which scratches on a smoked-glass target in a manner similar to that in the original friction-damped recorder. Sample calibration grids from four recorders showing usual calibration-grid variations are shown in figure 1. These were prepared in the following manner: The abscissas of these grids were traced by horizontal motions of the stylus induced by changes in applied pressure corresponding to changes in airspeed, and the ordinates were traced by vertical motions induced by changes in acceleration. Figure 2 is a cutaway drawing of the recorder in which the linkage by which this calibration grid is secured may be seen. Vertical motions of the accelerometer mass, opposed by the retarding force in the springs and damping bellows, are magnified and transmitted to the stylus arm. Rotational deflections of the airspeed link are transmitted to the same stylus by a short connecting link.

The airspeed mechanism consists of a corrugated pressure diaphragm which is restrained by an adjustable cantilever beam to deflections which are approximately linear with airspeed. Motions of the diaphragm are transmitted through a bell-crank magnification linkage and a bimetal strip to the rotating stylus arm. The bimetal strip is preadjusted so that, regardless of the range of airspeed required, the over-all sensitivity of the mechanism is constant throughout the operating temperature range. The complete airspeed mechanism is a commercially available subassembly similar to those used in airspeed indicators.

The accelerometer mechanism is a mass-spring system which is damped by bellows filled with oil having a low viscosity-temperature coefficient. The range is adjusted by the use of springs of proper spring constant and the damping is adjusted by the use of oil of the required viscosity. In order to achieve approximately constant damping throughout a wide temperature range, a damping compensator is installed between the bellows

(fig. 3). The compensator consists of a gate actuated by a bimetal spiral strip. The gate opens bypass capillaries between the bellows in such a manner that an increase in oil viscosity with temperature is accompanied by a corresponding decrease in flow resistance between the bellows. The net effect is such that the damping remains approximately constant throughout a wide temperature range. The temperature compensator is adjusted before assembly of the bellows mechanism, and, inasmuch as the viscosity-temperature characteristics of the silicone damping oil employed do not depend upon the viscosity of the oil, no further adjustment is necessary for proper operation regardless of the acceleration range of the recorder. A derivation of the necessary relationships for the design of the damping unit is given in appendix A.

Photographs of the recorder are given in figure 4 and pertinent data are as follows:

Size, inches	$4\frac{1}{2}$ by $4\frac{1}{2}$ by $2\frac{3}{4}$
Weight, pounds	$1\frac{3}{4}$
Acceleration linkage:	
Range, g units	-3 to 6 (or greater if desired)
Natural frequency (see fig. 5)	varies with range
Full-scale deflection, inches	0.7
Airspeed linkage:	
Range, miles per hour	0 to 200 (or greater if desired)
Natural frequency	Determined primarily by connecting tubes and other instrument volumes connected to these tubes
Full-scale deflection, inches	1.0
Diaphragm volume, cubic inches	0.2
Case volume, cubic inches	20

TEST APPARATUS

The test equipment employed is that available in the Langley Instrument Calibration Unit for routine testing of V-G recorders, accelerometers, and airspeed instruments. The apparatus used for the static calibration of V-G recorders consists of a variable-speed rotating table fitted with a rotating pressure seal which allows the required airspeed pressures to be imposed on the test instruments. The centrifugal accelerations imposed are evaluated by means of an accurate tachometer, and the airspeed pressures are measured with a standard liquid manometer.

The table is fitted with buzzers which vibrate the instruments being calibrated so as to reduce the effect of friction in the linkages.

Three pieces of apparatus were employed for the dynamic tests performed. Two of these, a vibrating cantilever beam and a pendulum, impose sine-wave accelerations on the test instrument, and the third, an accelerometer drop rig, imposes half-sine-wave accelerations. A description of each device is given in the following sections.

Cantilever beam.- The cantilever beam consists of a beam of variable length firmly clamped to a fixed support at one end. The free end of the beam is fitted with a movable instrument mounting panel and a hinged connector rod carrying a scratch stylus. The stylus bears against wax paper carried by a rotating drum and scratches thereon a record of the amplitude of beam deflections. A second stylus actuated by an electrical timer is used to mark $\frac{1}{10}$-second time intervals on the wax paper. The records secured enable the operator to determine the amplitude and frequency of oscillation and hence the peak values of impressed accelerations.

Initial deflections of the beam are secured by forcing the beam to deflect by means of a hydraulic jack. A quick-release mechanism on the jack is employed in order to prevent impedance of the motion of the beam during its first cycle of oscillation.

Pendulum.- The pendulum consists of an instrument mounting platform which swings on a ball-bearing pivot. The construction of the pendulum is such that it has a natural period of about 0.7 second. The pendulum is used primarily to secure calibrations in the low-frequency range for which other apparatus is unsuitable. The pendulum support is fitted with four stops which accurately determine the initial angle of release and hence the value of the peak acceleration applied to the instrument. The frequency of impressed accelerations is about 1.4 cycles per second, which is within the range of frequencies actually encountered in flight-maneuver measurements.

Drop rig.- The drop rig consists of an instrument mounting panel which is constrained by a slide rod and bearing mechanism so that it is free to move only in a vertical direction. The instrument and the support are initially raised by means of a pulley system to a predetermined height above a fixed helical spring and then released. The height of release, the spring constant, and the mass of the dropped assembly determine the value of peak acceleration imposed on the instrument. The impressed frequency depends upon the ratio of the mass and the spring constant. Deflections of the instrument are recorded on a wax-paper recorder similar to that used with the cantilever beam. The recorded deflections of the spring are used to determine the peak values of

imposed accelerations. Interchangeable springs are employed, and the weight of the instrument and support varied so that equivalent sine-wave frequencies from 3 to 13 cycles per second may be imposed.

ACCURACY AND PERFORMANCE

Accuracy under Static Conditions

The instrument is defined as operating under static conditions when the acceleration and airspeed are constant for a sufficient period of time to allow the recorder to achieve its final indication.

Hysteresis and friction.- Combined hysteresis and friction as determined by rotating-table calibrations taken in ascending and descending increments is ±0.1g and 3 miles per hour for the acceleration and airspeed elements, respectively.

Temperature effects.- No zero shift of the acceleration element occurs in the temperature range from 120° F to -30° F. The change in sensitivity with temperature is 2 percent per 100° F temperature change. No appreciable change in airspeed zero or sensitivity occurs throughout the same range of temperature.

Dynamic Response

The dynamic response of the airspeed element is primarily determined by the length and diameter of the tubing leading to the airplane pitot-static tubes and may be evaluated as a complete installation as indicated in reference 1. The dynamic response of the acceleration element is evaluated in the following sections.

Damping mechanism.- The damping mechanism is filled with oil of the proper viscosity to give 0.5 to 0.9 of critical damping throughout the operating temperature range. Figure 6 indicates the damping-temperature characteristics of a sample group of recorders. The damping in each case was determined by measuring the oscillation decrement after the acceleration element was plucked.

Response to sine-wave accelerations.- Figure 7 illustrates the response of four NACA oil-damped V-G recorders to sinusoidal accelerations as imposed by the vibrating cantilever beam and the pendulum. The dynamic response curves for these recorders follow closely the theoretical response curves for single-degree-of-freedom systems having equivalent damping, except for the points secured in the low-frequency pendulum

calibration. In this case, the response varies from approximately 0.95 to 1.00, depending upon the particular recorder. In comparison with the response curves of the original friction-damped recorder, the following facts are noteworthy:

(a) In the frequency range wherein the instrument is normally used (0 to 4 cps), the response curves of the NACA oil-damped V-G recorder closely approximate unity. The response for frequencies between 4 and 8 cycles per second is within 5 percent of the static response so that the recorder can be used at these higher frequencies without incurring errors larger than this.

(b) At frequencies approaching the natural frequency of the recorder (20 to 30 cps), increases in response caused by resonance have been almost entirely eliminated. In the range of vibration frequencies normally encountered in aircraft, it can be expected that a major reduction in vibration pickup will be secured.

Response to half-sine-wave accelerations.- Figure 8 indicates the response of the NACA oil-damped V-G recorder to single half-sine-wave accelerations. These simulate actual gust accelerations more closely than the steady-state wave applied by the cantilever beam. The response to the half-sine-wave accelerations contains the starting transients which are essentially damped out completely in the steady-state condition. The figure indicates that reliable indications can be secured up to frequencies of 10 cycles per second with a properly damped recorder. In contrast to this, the friction-damped-recorder indications are high to an extent determined by the applied frequency. At a frequency of 4.7 cycles per second, the friction-damped recorder may introduce positive errors of approximately 10 percent.

Rectification.- One of the phenomena associated with the response of the friction-damped recorder to sinusoidal accelerations was a shift in the mean of recorded accelerations from the true mean value. This shift is known as rectification. This characteristic was such that the possibility existed of incorrect acceleration recordings under conditions of severe structural vibrations. Figure 9 is a plot of the shift in the mean acceleration readings. No rectification exists in the NACA oil-damped V-G recorder, both because of the use of a stiffer stylus and the addition of a suitable damping unit.

Flight tests.- Two oil-damped recorders were installed in an airplane on the same mounting platform. Pull-up and push-down maneuvers were made at various airspeeds, and the resultant records were examined for vibration pickup and for correlation between recorders. The records were read by two observers and the correlation secured was within the reading accuracy attainable from the record. The reading accuracy and correlations secured were in the order of 0.1g.

INSTALLATION AND APPLICATION OF THE NACA OIL-DAMPED V-G RECORDER

The NACA oil-damped V-G recorder is normally employed by the NACA to accumulate statistical data concerning normal loads and airspeeds on regularly scheduled aircraft. The instruments and an instruction booklet are supplied to cooperating airlines, and the recorders are installed by them in operational airplanes. Details concerning some practical aspects regarding installation, handling of records, and so forth are covered in the instruction booklet, and some of these are discussed in the following sections.

Installation

The instrument may be attached to any accessible rigid part of the airplane structure at a location as free from engine vibration and as near the center of gravity of the airplane as possible. The acceleration-sensitive axis of the recorder (marked with an arrow on the face) must be alined with the normal axis of the airplane within 5° to prevent acceleration errors exceeding 1/2 percent. The total-pressure-tube inlet and the static-pressure inlet should be connected in parallel with the service airspeed indicator. Moisture traps or risers should be included in the pressure leads to prevent entry of water into the instrument case and consequent corrosion.

It should be emphasized that, as the instrument has a flat frequency response up to approximately 10 cycles per second, it should not be mounted on a flexible support (such as a sheet-metal bulkhead) which may vibrate in this or a slightly higher frequency range. Motor-vibration frequencies will usually be adequately attenuated by the oil damping incorporated.

Loading

The instrument is loaded by the following procedure:

(1) Remove the circular cover above the name plate by releasing the spring hold-down lever. In order to loosen the cover plate, it may be necessary to insert a knife blade or screw driver under the pins in the cover plate and to pry gently until it is free of the instrument case.

(2) Use tongs or a pair of pliers to grip the edges of a glass record plate and apply a thin film of lampblack to one side of the plate by passing the glass back and forth over a small, slightly sooty oil or

candle flame. With a little practice, a uniform film of proper density can be applied. Do not apply a heavy black powdery deposit, as such a deposit will yield unsatisfactory records. Good results are obtained if the density of the film is such that transmitted daylight gives the glass a medium-brown color.

(3) Place the glass in the retaining grooves on the back of the cover plate, push in to the pin stop, and replace the cover plate in the instrument.

Reference Line

A 1g reference line is required on the record glass to permit proper evaluation of the magnitude of recorded accelerations. The reference line is made by applying sufficient pressure to the airspeed pressure inlet to extend the line slightly beyond the flight record. Pressure, which is equivalent to approximately 130 percent of the maximum level-flight speed of the airplane, should be applied. Pressures greater than 135 percent of the maximum level-flight speed should not be applied, however, because damage to the mechanism might result. In order to insure that the stylus scribes the reference line in its proper position, the instrument may be lightly tapped on its front face to position the stylus properly before the pressure is applied. If the aircraft engines are running, the pressure may be applied without tapping the instrument case since the transmitted vibrations will remove errors caused by residual friction.

Handling of Records

Flight records should be carefully removed from the cover plate to avoid rubbing off any of the smoke film. The record should be placed on a slight incline and a few drops of the thin fixing lacquer supplied with the recorder should be applied with a medicine dropper to the upper edge of the record glass. Allow the lacquer to flow over the smoke film and dry of its own accord. If a sufficient amount of this lacquer is applied along the upper edge of the glass, the whole surface will be covered uniformly. Identification of each record should be scratched on the unused part of the smoke film.

Applications

The NACA oil-damped V-G recorder was developed to obtain records of normal accelerations at the center of gravity of an airplane as a result of flight maneuvers and atmospheric gusts. A typical record secured in such application is shown in figure 10. Investigators have,

on occasion, used the device with varying degrees of success to measure landing accelerations and accelerations caused by structural vibrations. Many of these installations were not successful because the impressed frequencies approached the frequency of the accelerometer element. Any ratio of impressed to natural frequency greater than approximately 0.3 may result in incorrect readings from the recorder. The magnitude of the inaccuracies which may occur above this ratio is indicated in figure 7. The natural frequencies of the NACA oil-damped V-G recorders will normally be from 20 to 30 cycles per second, as figure 5 indicates, depending upon the range of the instrument. Use of the NACA oil-damped V-G recorder must be restricted therefore to measuring accelerations which have an upper frequency limit between 5 and 10 cycles per second. Below these frequencies, the NACA oil-damped V-G recorder will give satisfactory accuracy.

CONCLUSIONS

On the basis of the tests made of the NACA oil-damped V-G recorder, the following conclusions are reached: As a result of development work done on the V-G recorder, the major limitations of the older friction-damped device have been eliminated, and the result is a recorder which requires no adjustment in the field and has more accurate acceleration-recording characteristics, adequate damping to eliminate resonances at vibration frequencies, and which shows no evidence of rectification under sinusoidal acceleration inputs. The airspeed element has been temperature-compensated and approximately linearized. As the over-all accuracy has been improved without any significant sacrifice in dimensions or weight, it is possible to substitute the oil-damped recorder for the friction-damped type in applications wherein the improved accuracy of the instrument is desirable.

Langley Aeronautical Laboratory
National Advisory Committee for Aeronautics
Langley Air Force Base, Va., June 30, 1950

APPENDIX A

DERIVATION OF NECESSARY RELATIONSHIPS FOR DESIGN OF DAMPING UNIT

Symbols

C	damping factor, $\frac{\text{lb}}{\text{in./sec}}$
C_c	critical damping factor $\frac{\text{lb}}{\text{in./sec}}$
d	diameter of capillary, ft
D	effective diameter of bellows, ft
F	force, lb
K	effective spring constant
L	length of capillary, ft
M	effective concentrated mass
n	viscosity, $\frac{\text{lb-sec}}{\text{sq ft}}$
ΔP	pressure drop across capillary, lb/sq ft
V	velocity of mass, ft/sec
V_1	volume flow through capillary, cu ft/sec

Derivation of Formula

In order to simplify the calculation of the dimensions of the damper required for the instrument, the effective mass of the accelerometer elements was converted by simpler lever formulas to the equivalent effective mass which exists at the bellows damper. The accelerometer mechanism may then be considered as an effective concentrated mass restrained by an effective spring. The mass is rigidly coupled to a movable plate between two bellows; the plate contains a small-diameter capillary through which the damping oil must flow when the plate is deflected.

If laminar flow is assumed in the connecting capillary, then by Poiseuille's formula for laminar flow

$$\Delta P = \frac{128nLV_1}{\pi d^4} \tag{1}$$

The volume flow through the capillary is

$$V_1 = \frac{\pi}{4}D^2V \tag{2}$$

The effective force on the plate per unit velocity of the mass is

$$\frac{F}{V} = C = \Delta P\frac{\pi}{4}D^2 = 8\pi nL\left(\frac{D}{d}\right)^4 \tag{3}$$

Converting to units which are normally used in instrument design gives

$$C = 3.64 \times 10^{-6}\left(\frac{D}{d}\right)^4 nL \tag{4}$$

where n is in centipoises and L, D, and d are in inches.

From reference 2, the value of C required for critical damping is

$$C_c = 2\sqrt{KM} \tag{5}$$

so that the ratio of the damping force obtained to that required for critical damping is

$$\frac{C}{C_c} = \frac{3.64 \times 10^{-6}nL\left(\frac{D}{d}\right)^4}{2\sqrt{KM}} \tag{6}$$

For best instrument response, this ratio is adjusted to a value of 0.7.

The calculation of capillary sizes required to eliminate or at least mitigate the changes in damping which occur because of variations of viscosity with temperature may be made on the basis that the product of the flow resistance and oil viscosity should be independent of temperature. It is only necessary therefore to introduce a similar second capillary to halve the flow resistance when the oil viscosity has been doubled because of a drop in temperature.

REFERENCES

1. Wildhack, W. A.: Pressure Drop in Tubing in Aircraft Instrument Installations. NACA TN 593, 1937.

2. Den Hartog, J. P.: Mechanical Vibrations. Second ed., McGraw-Hill Book Co., Inc., 1940.

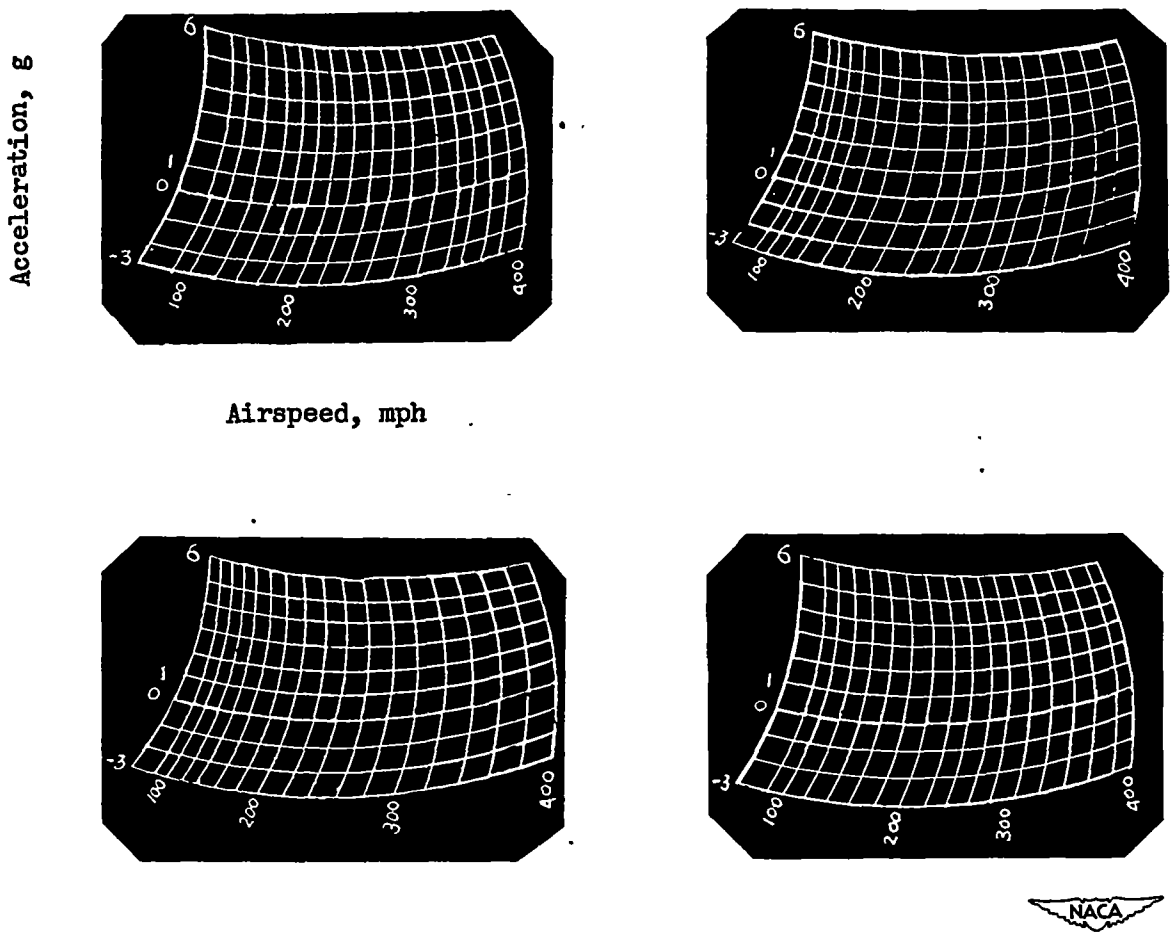

Figure 1.- Sample calibration grids from NACA oil-damped V-G recorders.

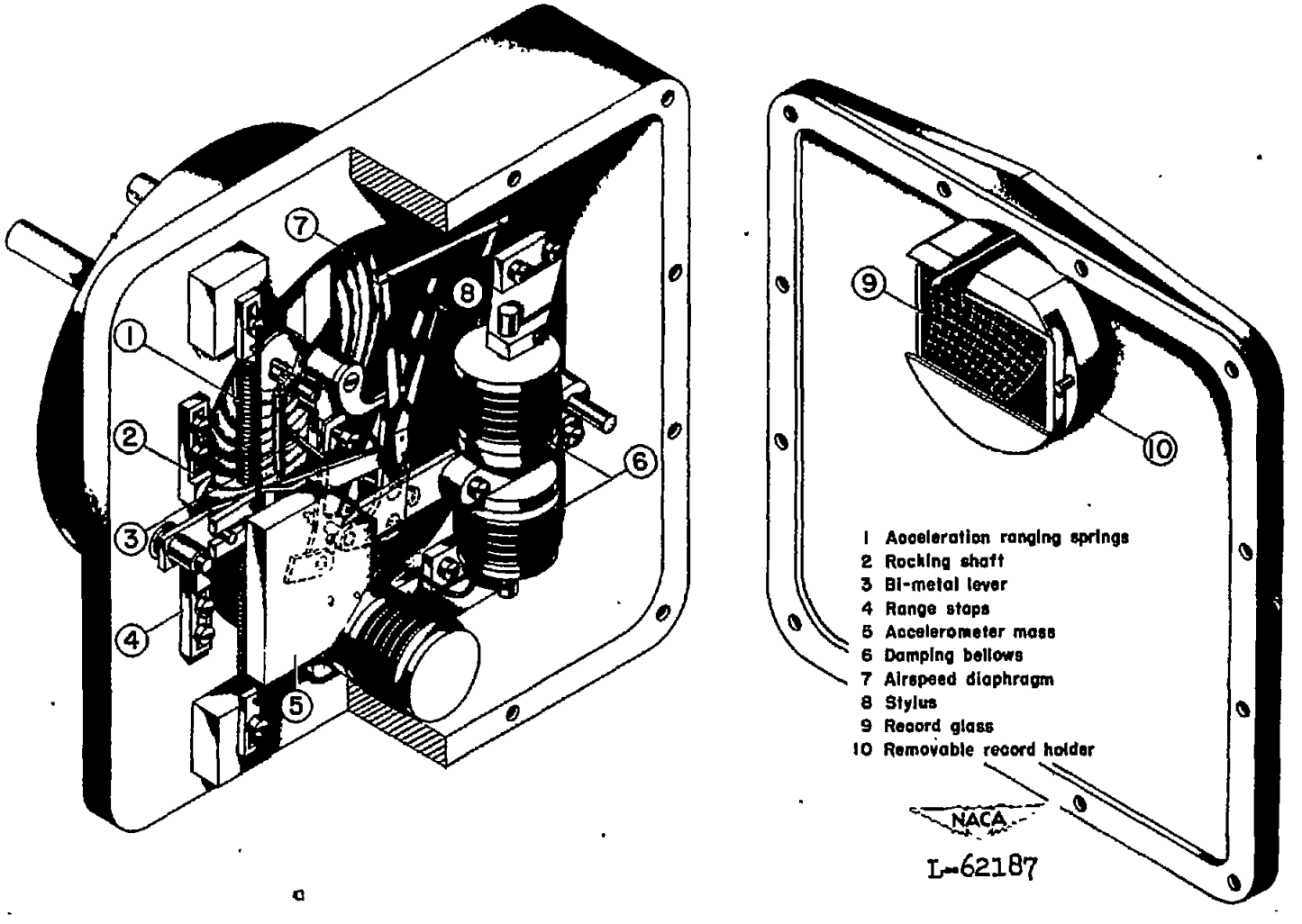

Figure 2.- Cutaway pictorial drawing of mechanical linkage in the NACA oil-damped V-G recorder.

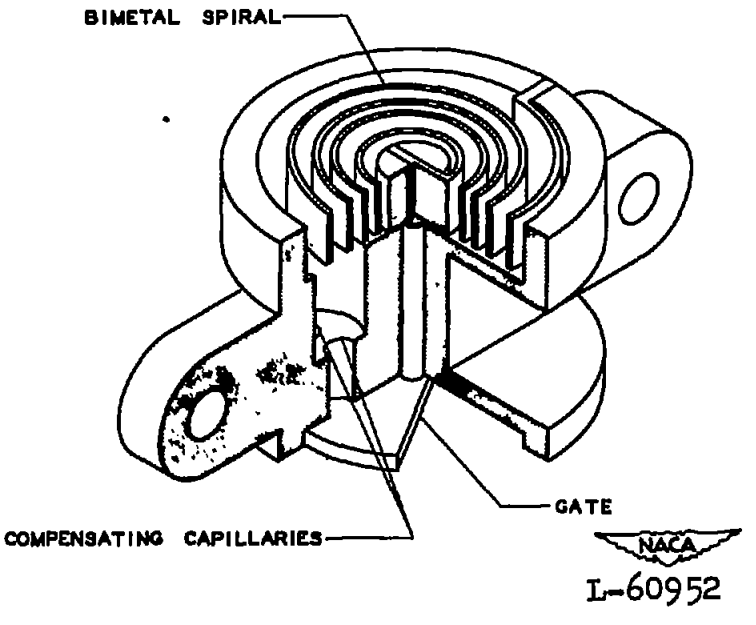

Figure 3.- Temperature compensation device for NACA oil-damped V-G recorder.

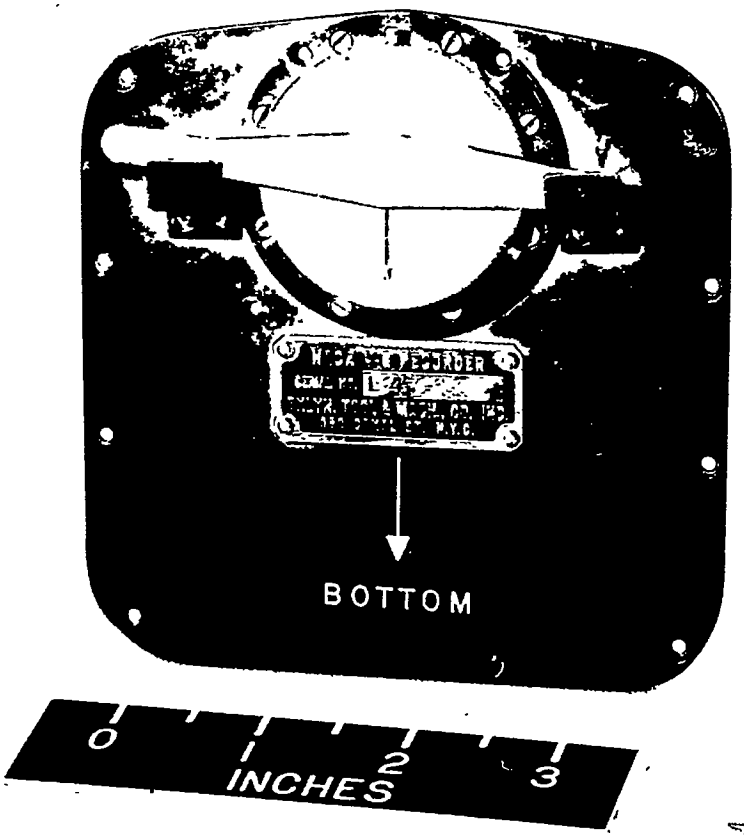

NACA

L-59953

(a) Front face.

Figure 4.- Photograph of NACA oil-damped V-G recorder.

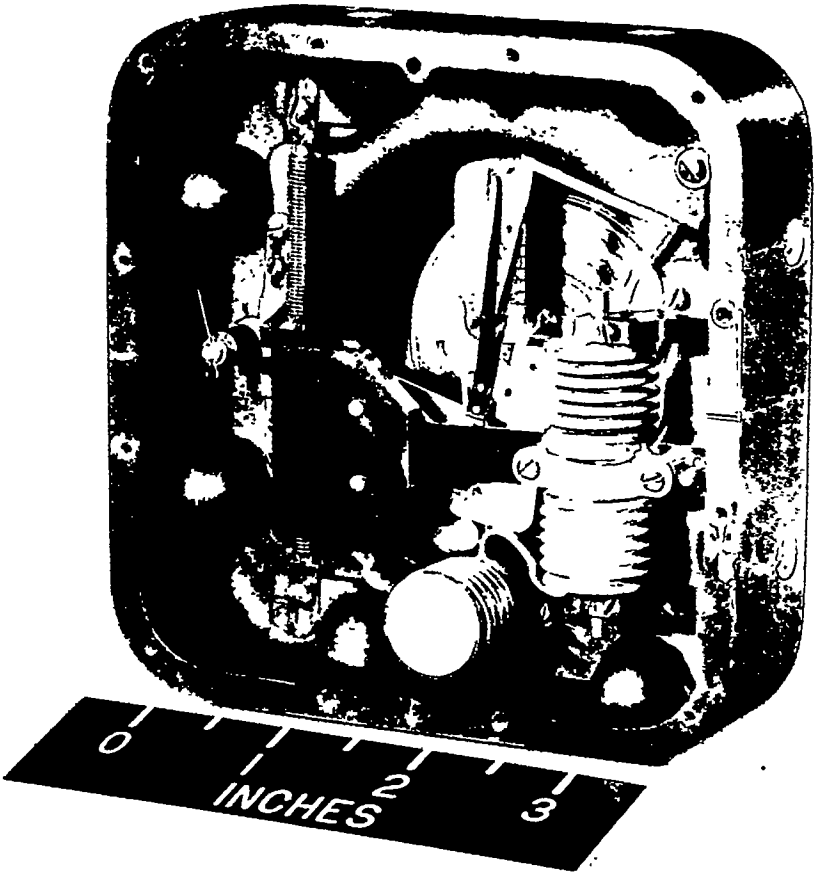

NACA

L-59952

(b) Cover removed.

Figure 4.- Concluded.

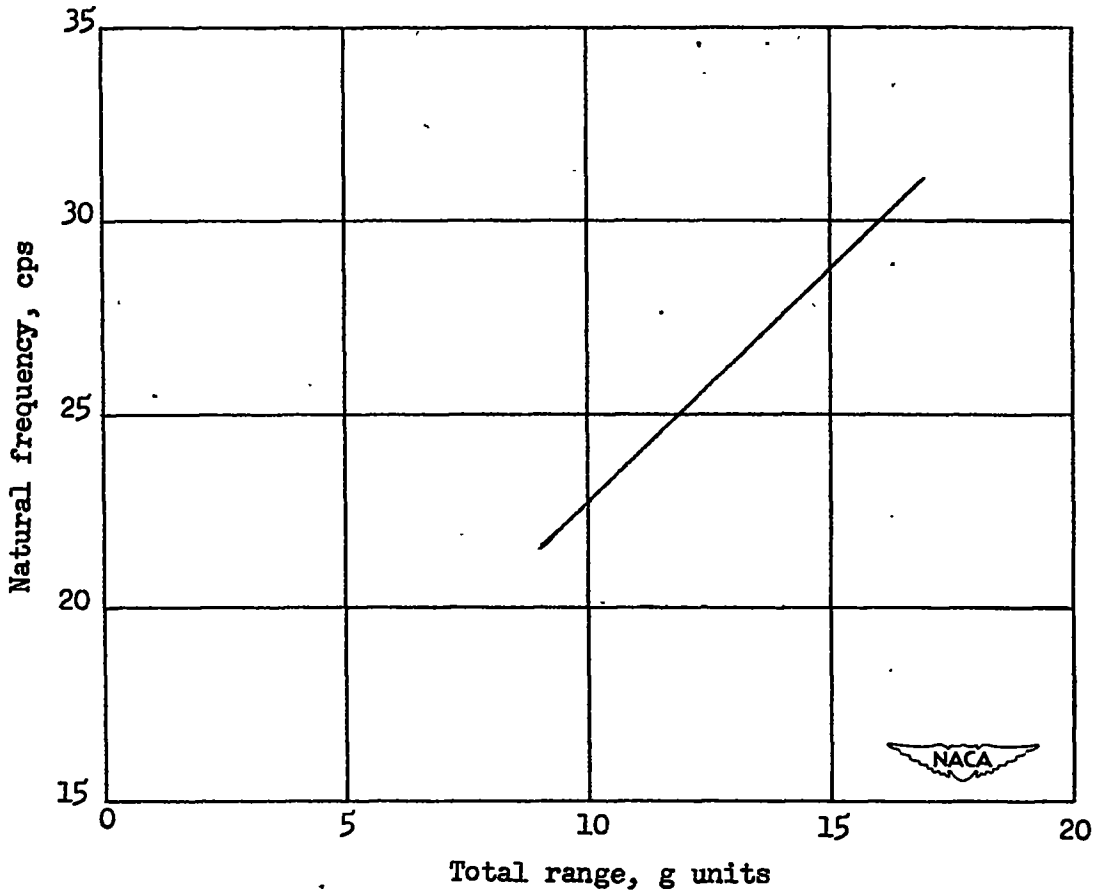

Figure 5.- Natural frequency of NACA oil-damped V-G recorder as determined by total operating range.

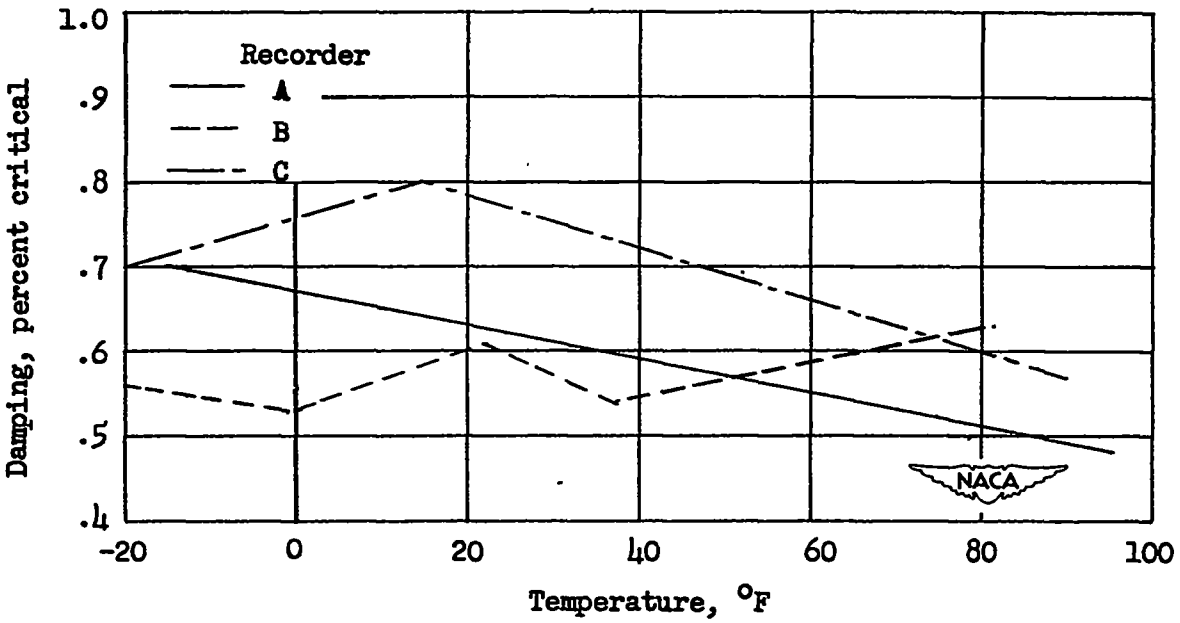

Figure 6.- Typical temperature-damping curves obtained with NACA oil-damped V-G recorder.

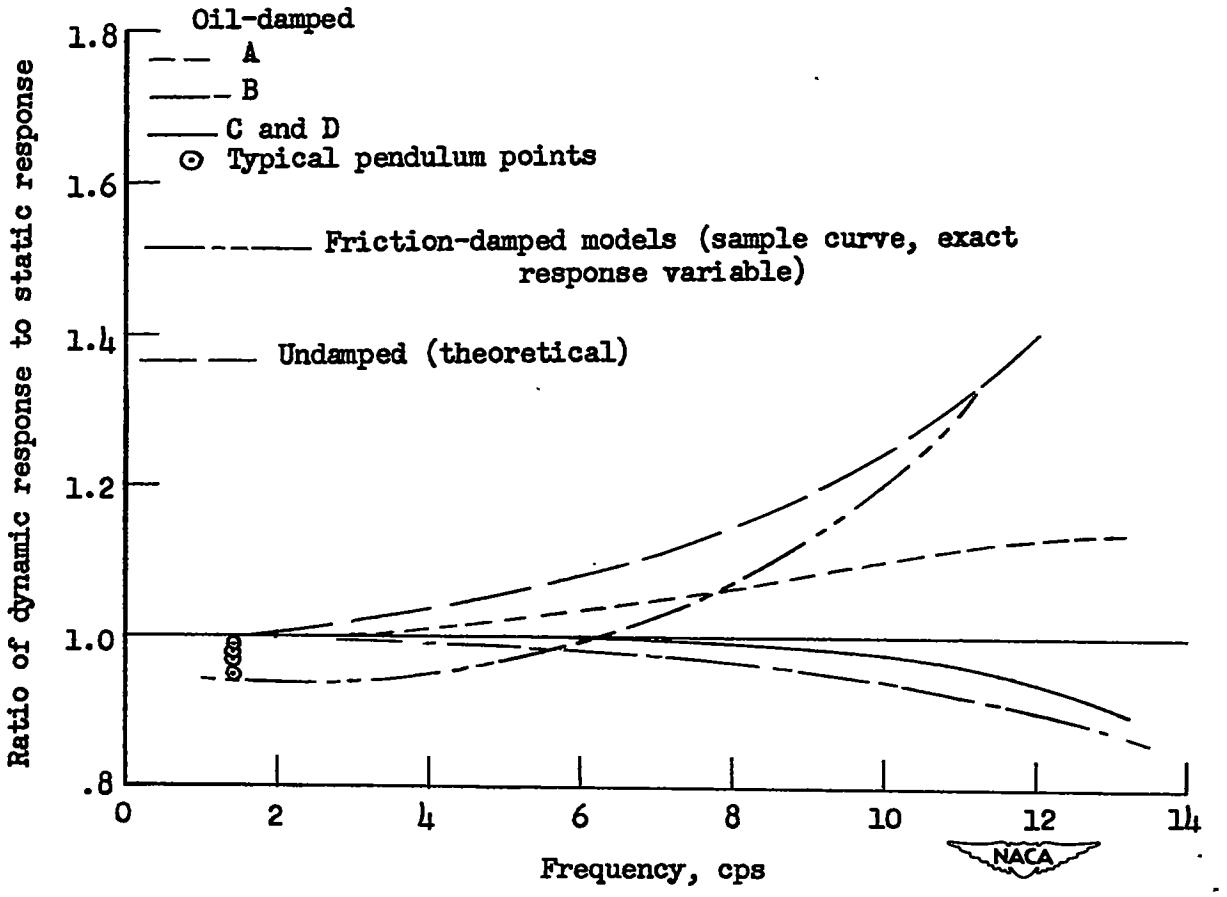

Figure 7.- Response of friction-damped and oil-damped NACA V-G recorders to impressed sine-wave accelerations.

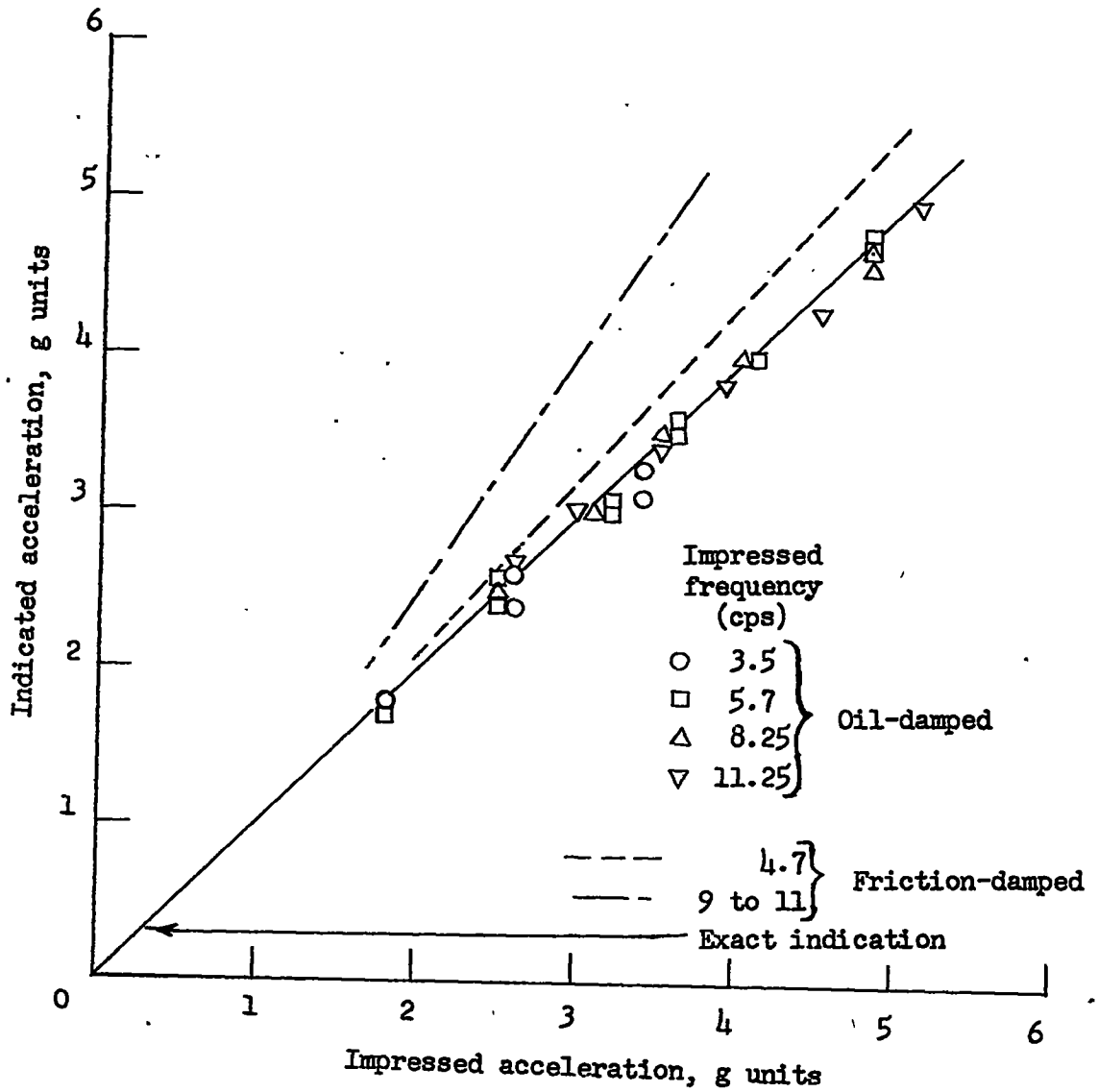

Figure 8.- Response of NACA V-G recorders to half-sine-wave accelerations impressed by acceleration drop rig.

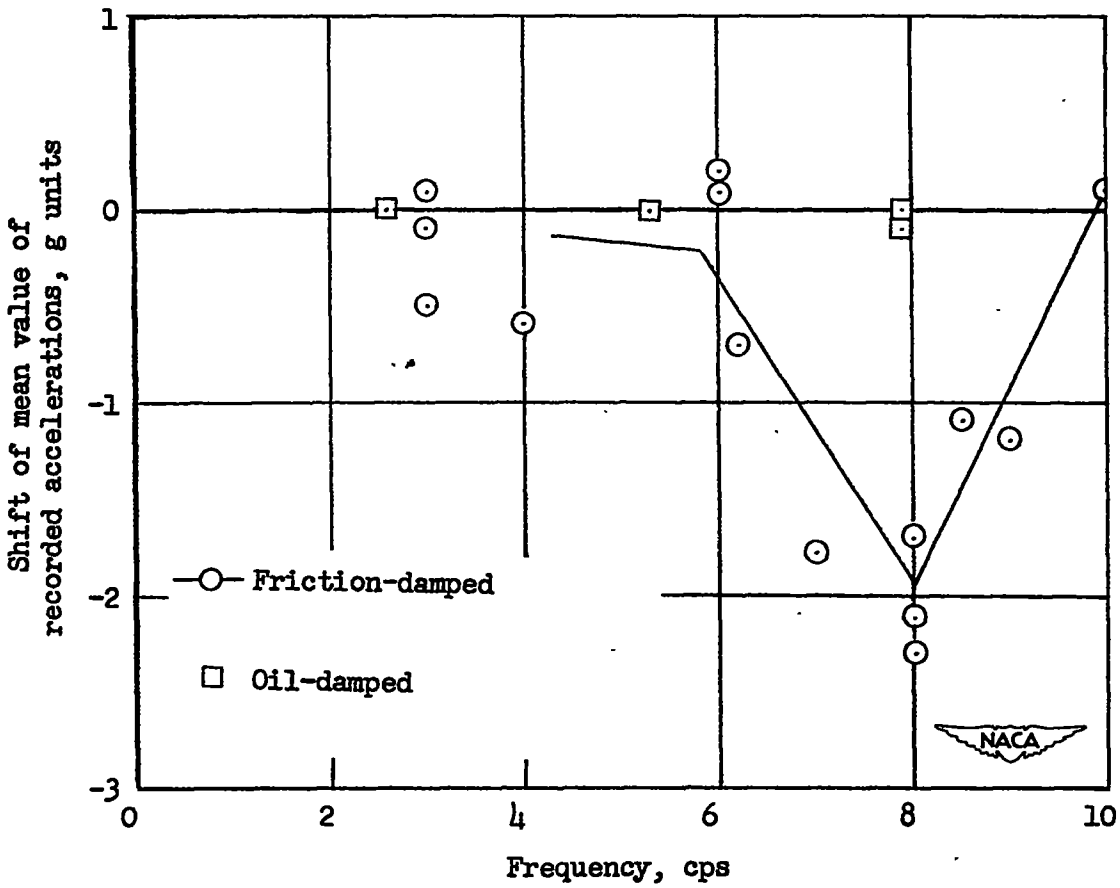

Figure 9.- Shift of mean value of recorded accelerations in friction-damped and oil-damped NACA V-G recorders.

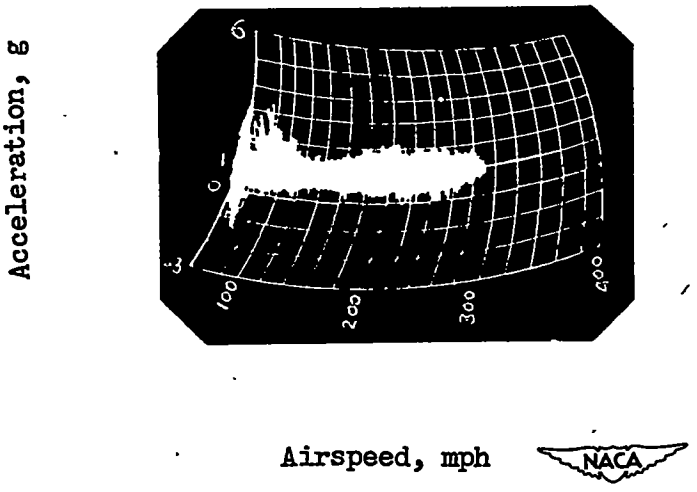

Figure 10.- Typical flight record superimposed on V-G calibration grid.

NACA-Langley - 10-18-50 - 1200