NACA TN 2197

TECH LIBRARY KAFB, NM
0065179

NATIONAL ADVISORY COMMITTEE FOR AERONAUTICS

TECHNICAL NOTE 2197

PRESSURE DISTRIBUTION AND DAMPING IN STEADY PITCH AT SUPERSONIC MACH NUMBERS OF FLAT SWEPT-BACK WINGS HAVING ALL EDGES SUBSONIC

By Harold J. Walker and Mary B. Ballantyne

Ames Aeronautical Laboratory
Moffett Field, Calif.

October 1950
Washington

AFMDC
TECHNICAL LIBRARY
AFL 2811

319.98/41

TECH LIBRARY KAFB, NM

0065179

NATIONAL ADVISORY COMMITTEE FOR AERONAUTICS

TECHNICAL NOTE 2197

PRESSURE DISTRIBUTION AND DAMPING IN STEADY PITCH AT SUPERSONIC MACH NUMBERS OF FLAT SWEPT-BACK WINGS HAVING ALL EDGES SUBSONIC

By Harold J. Walker and Mary B. Ballantyne

SUMMARY

A method is presented for calculating the pressure distribution and damping in steady pitch at supersonic Mach numbers of thin, flat, swept-back wings having all edges straight and subsonic. Although it is adaptable to wings with negative rake at the tips, the method is applied only to wings with streamwise tips.

The method consists of two steps: first, the calculation of a basic pressure distribution, which is identical to that existing on an infinite triangular plan form having leading edges that coincide with those of the swept-back wing; and second, the correction of this basic distribution to account for the effects of the subsonic trailing edges and tips. In calculating the various corrections, use is made of the principle of the superposition of conical flows. The derivative for the damping in pitch is calculated in a similar manner.

In applying the method of analysis to a typical configuration, it was found that several of the corrections were small, and, from a practical standpoint, could be dropped. By dropping these terms the method is shortened to the extent that it closely parallels previously published methods for calculating the lift, pitching moment, and damping in roll of swept-back wings with subsonic edges.

A substantial reduction of the pressure in the vicinity of a subsonic tip was disclosed in the analysis. This effect was also found earlier for the cases of steady lift and steady roll.

The method is based upon the usual assumptions and limitations of the linearized potential theory for supersonic flow.

INTRODUCTION

Methods have been developed previously for the calculation of the pressure distribution and the damping in steady pitch at supersonic Mach

numbers for thin, flat wings of various plan forms, including triangular wings (reference 1), rectangular wings (reference 2), wings with supersonic leading edges but somewhat arbitrary plan form (reference 3), and swept-back wings having all supersonic edges or a combination of subsonic leading edges and supersonic trailing edges and tips (references 4 and 5).[1] An approximate analysis of the damping in pitch of a limited class of swept-back wings having all edges subsonic and straight is reported in reference 6. In the present report, a method, which can be applied more generally than that of reference 6, is presented for the analysis of swept-back wings with straight subsonic edges.

The present method of analysis consists essentially in the superposition of various conical and quasi-conical[2] fields of pressure in such a manner that the particular boundary conditions for a swept-back wing in steady pitch are fulfilled. In detail, it closely follows the analyses given in references 7 and 8 for the case of steady lift and in reference 9 for the case of steady roll. The analyses for the three cases, in fact, differ only in application to the different sets of boundary conditions corresponding to lift, roll, and pitch.

The present analysis and those of references 7 and 9 are limited to wings having zero or negative rake at the tips; however, wings having positive rake can be treated through an adaptation of the method given in reference 8. Although the analysis for the type of configuration in which the Mach lines from the root of the trailing edge intersect the leading edge is not complete, the results given for this case are sufficiently accurate for many practical purposes. The scope of the method in general is limited to the usual idealizations and assumptions of linearized potential theory.

To illustrate the application of the method, calculations of the damping derivative and of the pressure distribution along several chordwise and spanwise sections of the swept-back wing shown in figure 1(a) are included.

NOTATION

a slope of any ray through origin divided by slope of Mach lines (fig. 1(b)) $\left(\beta\frac{y}{x}\right)$

---

[1]The terms "subsonic edge" and "supersonic edge" refer to edges having normal components of flow which are subsonic and supersonic, respectively.

[2]The term "quasi-conical pressure" designates a pressure which is distributed linearly along rays passing through a fixed point.

a_l the ray a intersecting the trailing edge at the point from which the Mach line passing through the tip of the leading edge emanates (fig. 1(b))

$$\left[a_l = \frac{1 - \frac{\beta s}{c_o m}(1-m)}{1 - \frac{\beta s}{c_o m m_t}(1-m)}\right]$$

a_o the ray a intersecting the trailing edge at the point from which the Mach line passing through point $P(x,y)$ emanates (fig. 1(b)) $\left[\text{on trailing edge, } a_o = m_t \frac{\beta y + c_o - x}{\beta y + c_o m_t - x}; \text{ on tip, } a_o = \frac{\beta s}{x + \beta(y-s)}\right]$

a_t slope of ray through the trailing-edge tip divided by slope of Mach lines (fig. 1(b)) $\left(\frac{\beta s}{c_o + \frac{\beta s}{m_t}}\right)$

b wing span

C_m pitching-moment coefficient $\left[\frac{M}{\left(\frac{1}{2}\rho V^2\right) S c_o}\right]$

C_{m_q} derivative for the damping in pitch $\left[\frac{\partial C_m}{\partial\left(\frac{q c_o}{2V}\right)}\right]$

(In the present report, C_{m_q} with no subscript represents the damping moment about the center-of-gravity axis resulting from the loading due to steady pitch about the y axis instead of the center-of-gravity axis. See equation (2).)

c_o root chord of wing

f_1, f_2, f_3, f_4, f_5 auxiliary functions used in analysis

m slope of leading edge divided by slope of Mach lines (fig. 1(b)) ($\beta \cot \Lambda$)

m_a slope of ray passing through point x_A, y_A and tip of leading edge divided by slope of Mach lines (fig. 1(b))

$$\left[\frac{\beta(s-y_A)}{\frac{\beta s}{m} - x_A}\right]$$

m_o slope of ray passing through root of trailing edge and tip of leading edge divided by slope of Mach lines (fig. 1(b)) $\left(\frac{\beta ms}{\beta s - mc_o}\right)$

m_s slope of tip divided by slope of Mach lines

m_t slope of trailing edge divided by slope of Mach lines (fig. 1(b))

M pitching moment about the y axis

M_o free-stream Mach number

Δp pressure difference between the upper and lower wing surfaces

P pressure coefficient $\left(\frac{\Delta p}{\frac{1}{2}\rho V^2}\right)$

ΔP correction to the basic pressure coefficient

P_{L_o} basic pressure coefficient at the root of the trailing edge for a wing at constant angle of attack

P_{P_o} basic pressure coefficient at the root of the trailing edge for a wing in steady pitching motion

q steady pitching velocity, radians per unit of time (positive, if direction of rotation is that of increasing angle of attack)

R $\frac{1 - 2m^2}{1 - m^2}\bar{K} + \frac{m^2}{1 - m^2}\bar{E}$

s semispan of wing

S area of wing

t slope of any ray passing through the point x_A, y_A divided by slope of Mach lines $\left(\beta \frac{x - x_A}{y - y_A}\right)$

t_o slope of ray through trailing-edge apex divided by slope of Mach lines $\left(\beta \frac{y}{x - c_o}\right)$

V	free-stream velocity
x,y,z	Cartesian coordinates in the stream direction, across the stream, and in the vertical direction, respectively (fig. 1(b))
$\bar{x}$	streamwise distance from y axis to the center of pressure of an element of wing area
x_s	streamwise coordinate of point where any ray t_o intersects tip or leading edge (for the tip, $x_s = \frac{\beta s}{t_o} + c_o$; for the leading edge, $x_s = \frac{c_o m}{t_o - m} + c_o$)
$x_{c.g.}$	streamwise distance from y axis to center of gravity of airplane configuration
Z	force in the vertical direction
$\frac{qc_o}{2V}$	dimensionless parameter representing steady pitching velocity
β	$\sqrt{M_o^2 - 1}$
δ	constant factor used in equations (5) and (6)
ρ	free-stream mass density
χ	argument of inverse cosine terms (see text)
Λ	angle of sweep of leading edge

Elliptic Integrals

$\bar{K}$	complete elliptic integral of first kind with modulus $\sqrt{1-m^2}$
$\bar{E}$	complete elliptic integral of second kind with modulus $\sqrt{1-m^2}$
K_o	complete elliptic integral of first kind with modulus k_o
E_o	complete elliptic integral of second kind with modulus k_o
k_o	$\sqrt{1-m_t^2}$
$F(\varphi_o,k_o)$	incomplete elliptic integral of first kind with modulus k_o, amplitude φ_o

$E(\varphi_o,k_o)$	incomplete elliptic integral of second kind with modulus k_o, amplitude φ_o
φ_o	$\sin^{-1}\sqrt{\frac{1-t_o^2}{1-m_t^2}}$
$K(k)$	complete elliptic integral of first kind with modulus k
$E(k)$	complete elliptic integral of second kind with modulus k
k	$\sqrt{\frac{(m-a_o)(1-m)}{2m(1+a_o)}}$
k'	$\sqrt{1-k^2}$
$F(\varphi,k')$	incomplete elliptic integral of first kind with modulus k', amplitude φ
$E(\varphi,k')$	incomplete elliptic integral of second kind with modulus k', amplitude φ
φ	$\sin^{-1}\frac{1}{k'}\sqrt{\frac{1+m}{2}}$
$F(\psi,k')$	incomplete elliptic integral of first kind with modulus k', amplitude ψ
$E(\psi,k')$	incomplete elliptic integral of second kind with modulus k', amplitude ψ
ψ	$\sin^{-1}\frac{1}{k'}\sqrt{\frac{\beta y+mx}{\beta y+x}\times\frac{1+m}{2m}}$
Φ_o	$[E(k)-K(k)]\,F(\varphi,k')+K(k)\,E(\varphi,k')$
ψ_o	$[E(k)-K(k)]\,F(\psi,k')+K(k)\,E(\psi,k')$

Subscripts

1	terms related to the conical pressures (except as noted)
2	terms related to the quasi-conical pressures (except as noted)

A terms evaluated at the point $A(x_A,y_A)$ on the wing boundary

$$\left[\text{on the trailing edge}, x_A = \frac{m_t c_o}{m_t - a}, \quad y_A = \frac{m_t c_o a}{\beta(m_t - a)}; \text{ on the tip, } x_A = \frac{\beta s}{a}, \; y_A = s\right]$$

L terms corresponding to steady lift

P terms corresponding to steady pitching velocity

R terms corresponding to steady rolling velocity

c.g. terms referring to center-of-gravity axis of airplane configuration

α designates "per unit angle of attack"

Superscripts

' terms related to symmetrical canceling sectors in wake

'' terms related to oblique canceling sectors in wake

''' terms related to canceling sectors outboard of tip

METHOD OF ANALYSIS

The method for calculating the pressure[3] and the damping derivative for flat swept-back wings in steady pitch is developed in a manner similar to that in reference 7 for wings in steady lift and in reference 9 for wings in steady roll. The present analysis, therefore, will be shortened somewhat by referring frequently to these two reports. The analysis is restricted to wings having straight subsonic edges and, although it can be adapted easily to wings with negative rake[4] at the tips, is applied only to cases of zero rake (i.e., streamwise tips). A thorough treatment of those cases in which the Mach lines originating at the trailing edge intersect the leading edge is not included; however, results which are sufficiently accurate for most practical cases of this type can be obtained from the method as outlined.

[3]Throughout the report the terms "pressure" and "pressure coefficient" will be used synonymously.

[4]The rake at the tip is negative if the tip slopes inwardly from the leading edge.

In the coordinate system chosen for the analysis, the origin is located at the apex of the leading edge and the x axis coincides with the root-chord line of the wing. (See fig. 1.) The y and z axes extend spanwise in the plane of the wing and perpendicular to the plane of the wing, respectively.

The analysis is facilitated by assuming initially that the pitching axis coincides with the y axis. Subsequently, the pressure distribution due to pitching about an axis passing through the center of gravity of the airplane configuration (assumed to lie on the x axis at a distance $x_{c.g.}$ downstream from the y axis) can be obtained by superposing on the pitching motion about the y axis a vertical translational motion of velocity $qx_{c.g.}$. The pressure distribution due to this translational motion corresponds to that of a wing at a constant angle of attack of $-qx_{c.g.}/V$. (See reference 4.) Thus,

$$\begin{aligned}(P_P)_{c.g.} &= P_P - \left(\frac{qx_{c.g.}}{V}\right) P_{L_\alpha} \\ &= P_P - \left(\frac{qc_o}{2V}\right) \frac{2x_{c.g.}}{c_o} P_{L_\alpha} \qquad (1)\end{aligned}$$

where P_P and P_{L_α} have been corrected for the effects of canceling the excess basic pressure in the wake and outboard of the tips. The corresponding transformation for the damping derivative is

$$\left(C_{m_q}\right)_{c.g.} = \left(C_{m_q}\right)_y + \frac{x_{c.g.}}{c_o}\left(C_{L_q}\right)_y - 2\,\frac{x_{c.g.}}{c_o}\,C_{m_\alpha} - 2\left(\frac{x_{c.g.}}{c_o}\right)^2 C_{L_\alpha}$$

in which $\left(C_{m_q}\right)_y$ and $\left(C_{L_q}\right)_y$ are the damping derivative and lift coefficient corresponding to steady pitching motion about the y axis, and C_{m_α} and C_{L_α} are the moment coefficient and lift coefficient per unit angle of attack. In order to simplify the analysis in the present report, the terms $\left(C_{m_q}\right)_y$ and $\left(C_{L_q}\right)_y$ are calculated as a single term C_{m_q} such that

$$\left(C_{m_q}\right)_{c.g.} = C_{m_q} - 2\,\frac{x_{c.g.}}{c_o}\,C_{m_\alpha} - 2\left(\frac{x_{c.g.}}{c_o}\right)^2 C_{L_\alpha} \qquad (2)$$

It should be observed that the term C_{m_q} then represents the damping moment about the center-of-gravity axis resulting from the loading due to steady pitch about the y axis, and therefore does not, by itself, constitute the complete damping derivative (except in the special case in which the center of gravity lies at the leading-edge apex). The additional terms (P_{L_α}, C_{L_α}, and C_{m_α}) required for other locations of the center of gravity can be calculated by the method of references 7 and 8.

The order of the analysis consists in the derivation of the pressure distribution, followed by the calculation of the damping derivative.

Pressure Distribution

Following the procedure given in references 7, 8, and 9, the swept-back wing is considered initially to be an integral part of an infinite triangular plan form, the leading edges of which coincide with those of the swept-back wing. Then it is possible to calculate a basic pressure distribution over the swept-back wing by means of the simple expression for the triangular wing. The excess basic pressures introduced in the wake and outboard of the tips of the swept-back wing in the first step are subsequently canceled by superposing over those regions a series of conical and quasi-conical pressure fields. At the same time, the Kutta requirement of zero pressure along the trailing edges and tips is fulfilled. If the trailing edges and tips are supersonic, these exterior pressures may be neglected since their influence does not extend onto the plane of the wing. For wings with subsonic edges, several primary and secondary corrections representing the effects of canceling the excess pressure in the wake and outboard of the tips must be added to the basic pressures.

Basic pressure distribution.- The basic pressure distribution for the triangular wing in steady pitch is given in reference 4 as

$$\left.\begin{aligned} P_P &= \left(\frac{qc_o}{2V}\right) \frac{8}{\beta R} \frac{x}{c_o} \frac{2m^2-a^2}{\sqrt{m^2-a^2}} \\ R &= \frac{1-2m^2}{1-m^2}\bar{K} + \frac{m^2}{1-m^2}\bar{E} \end{aligned}\right\} \tag{3}$$

The variation of pressure is seen to be quasi conical (i.e., the pressure varies linearly in the x direction along a given ray a) and to be dependent principally upon the sweep of the leading edge. Equation (3)

also can be used directly to calculate the pressure distribution of swept-back configurations, except in the vicinity of a subsonic boundary. For the configuration considered herein, the regions in which the above expression is inadequate are labeled I, II, and III in figure 1(a). Region I is influenced by the excess pressure in the wake, region II by the excess pressure outboard of the tip, and region III by the pressure both in the wake and outboard of the tip.

Primary corrections due to cancellation of basic pressure in wake.- The corrective terms, which in regions I, II, and III correspond to the induced effects caused by the cancellation of the excess basic pressure, are designated "primary corrections" in the following analysis. They are derived by superposing along the subsonic boundaries a series of sectors of conical and quasi-conical pressure which, when integrated, completely cancel the excess pressure. The function for each sector of canceling pressure, in order to fulfill the boundary conditions of the pressure to be canceled, must:

1. Represent a field of pressure consisting of conical and quasi-conical portions which conform with the pressure field given by equation (3)

2. Have a downwash flow field which does not, in general, extend onto the plane of the wing, in order that the flatness of the wing be maintained

3. Satisfy the linearized equation for potential flow

A function, which fulfills the above requirements with regard to the cancellation of the basic pressure in the wake, is composed of two principal parts: the first, represented by a single symmetrical sector of pressure, and the second, represented by a series of oblique sectors of infinitesimal pressure. The first cancels the relatively large field of pressure determined by the basic pressure at the apex of the trailing edge (fig. 2(a)), and the second cancels the remaining smaller portion of the pressure (fig. 2(b)).

The first principal part of the function is composed of a conical and a quasi-conical component, and can be derived from the symmetrical function previously utilized in reference 7 for the lifting case. Thus the function[5]

[5] It is understood that the real part of $F(\varphi_o,k_o)$ applies. For values of $\sin \varphi_o$ greater than one, the real part of φ_o is equal to $\pi/2$, and the real part of $F(\varphi_o,k_o)$ is equal to K_o.

$$\Delta P_L = -\frac{P_{L_o}}{K_o} F(\varphi_o, k_o)$$

where

$$k_o = \sqrt{1-m_t^2}$$

$$\varphi_o = \sin^{-1} \sqrt{\frac{1-t_o^2}{1-m_t^2}}$$

and, where P_{L_o} is the lifting pressure at the apex of the trailing edge, can be used directly in the pitching case to cancel a field of constant pressure, equal in magnitude to the pressure (due to pitch) at the trailing-edge apex, by rewriting it in the form

$$\Delta P_{P_1}' = -\frac{P_{P_o}}{K_o} F(\varphi_o, k_o) \tag{4}$$

$$k_o = \sqrt{1-m_t^2}$$

$$\varphi_o = \sin^{-1} \sqrt{\frac{1-t_o^2}{1-m_t^2}}$$

where P_{P_o} is given by equation (3) for $a=0$ and $x=c_o$, that is,

$$P_{P_o} = \left(\frac{qc_o}{2V}\right) \frac{16m}{\beta R}$$

The field of pressure canceled by means of equation (4) is conical (fig. 2(a)), since the canceling pressure is constant along the rays t_o originating at the apex of the trailing edge.

A symmetrical function, which cancels the remaining quasi-conical portion of the pressure (fig. 2(a)), can be derived by the method of superposing infinitesimal conical pressure fields, as outlined in reference 9. The derivation consists in the formation of a function for a quasi-conical pressure field by integrating the effects at a point $P(x,y)$ on the wing of a series of infinitesimal symmetrical conical sectors represented by equation (4). The sectors are distributed in a pyramidal arrangement with the apexes located along the ray $t_o = 0$. If ξ is the streamwise coordinate of the apex of each sector measured from the apex of the trailing edge, and the limit ξ_o designates the apex of the rearmost sector containing the point $P(x,y)$ within its Mach cone, the

derivation leads to the expression[6]

$$\left.\begin{aligned} f_1 &= \text{r.p. } \delta_1 \int_0^{\xi_0} \frac{F(\varphi_\xi,k_0)}{K_0}\, d\xi \\ &= \text{r.p. } \delta_1 \frac{x-c_0}{K_0}\left[F(\varphi_0,k_0) - \left|\frac{t_0}{m_t}\right| \sin^{-1}\sqrt{\frac{m_t^2(1-t_0^2)}{t_0^2(1-m_t^2)}}\,\right] \end{aligned}\right\} \tag{5}$$

in which

$$\varphi_\xi = \sin^{-1}\sqrt{\frac{1-t_\xi^2}{1-m_t^2}}$$

$$t_\xi = \frac{\beta y}{x-c_0-\xi}$$

and δ_1 is a constant. As desired, the real part of equation (5) is directly proportional to the distance $(x-c_0)$ and varies linearly with t_0 between the ray $t_0 = 0$ and the trailing edges of the wing as shown in figure 2(a). The expression, however, reduces to the value $\delta_1(x-c_0)(K_0-\pi/2)/K_0$, instead of zero, along the trailing edges. Hence, in order to satisfy the boundary conditions along the trailing edges, it is necessary to subtract from equation (5) an additional function which has the value $\delta_1(x-c_0)(K_0-\pi/2)/K_0$ in the region of the wake. This additional function can be derived from the two expressions obtained by superposing the infinitesimal conical sectors represented by equation (4) along the rays $t_0 = m_t$ and $t_0 = -m_t$, respectively, in a manner similar to that for deriving equation (5). In this manner, the two functions

$$f_2=\text{r.p.}\,\delta_2(x-c_0)\left[m_t(1-m_t t_0)F(\varphi_0,k_0)+(t_0-m_t)E(\varphi_0,k_0)-\frac{t_0+m_t}{|t_0+m_t|}\sqrt{(1-t_0^2)(t_0^2-m_t^2)}\right]$$

and

$$f_3=\text{r.p.}\,\delta_3(x-c_0)\left[m_t(1+m_t t_0)F(\varphi_0,k_0)-(t_0+m_t)E(\varphi_0,k_0)+\frac{t_0-m_t}{|t_0-m_t|}\sqrt{(1-t_0^2)(t_0^2-m_t^2)}\right]$$

are determined. Since only the real parts of these two functions are to be considered, the factors which determine the signs of the radical terms may be replaced by $t_0/|t_0|$. The two functions are now added giving the resultant function

$$f_4 = \text{r.p. } \delta_4(x-c_0)\left[F(\varphi_0,k_0) - E(\varphi_0,k_0)\right] \tag{6}$$

[6]The abbreviation r.p. indicates real part.

which along the trailing edges reduces to the value $\delta_4(x-c_o)(K_o-E_o)$. If δ_4 is set equal to $\delta_1(K_o-\pi/2)/K_o(K_o-E_o)$, then equation (6) becomes the additional function required to satisfy the boundary conditions along the trailing edges.[7] Except for the determination of the constant δ_1, the expression obtained by combining equations (5) and (6) describes the desired field of quasi-conical canceling pressure. This function must have the same boundary value along the x axis as that given by equation (3) with x replaced by $x-c_o$, that is,

$$\delta_1 \frac{x-c_o}{K_o} \frac{\pi}{2} = \left(\frac{qc_o}{2V}\right) \frac{16m}{\beta R} \frac{x-c_o}{c_o} = P_{P_o} \frac{x-c_o}{c_o}$$

Thus, δ_1 must be equal to $2P_{P_o}K_o/\pi c_o$, and the corrective term corresponding to the quasi-conical portion of the pressure becomes

$$\Delta P_{P_2}' = -P_{P_o} \frac{x-c_o}{c_o} \frac{2}{\pi} \left\{F(\varphi_o,k_o) - \left|\frac{t_o}{m_t}\right| \sin^{-1}\sqrt{\frac{m_t^2(1-t_o^2)}{t_o^2(1-m_t^2)}} - \frac{K_o-(\pi/2)}{K_o-E_o}\left[F(\varphi_o,k_o) - E(\varphi_o,k_o)\right]\right\} \tag{7}$$

Equations (4) and (7) together comprise the first part of the overall function required to cancel the excess basic pressure in the wake. The field of pressure represented by these equations is shown in figure 3, in which the regions of overlapping (or induced) pressure on the wing are indicated by the dotted lines.

The second part of the complete pressure-canceling function for the basic pressure in the wake (consisting of a series of oblique sectors) has been developed in reference 9, but in the form appropriate to a condition of steady roll. The expression for a single oblique sector of canceling pressure for the right half of a rolling wing is

---

[7] It is interesting to note that, if the difference between the functions f_1 and f_2 is taken, the function

$$f_5 = \text{r.p. } \delta_5 y \left[E(\varphi_o,k_o) - m_t^2 F(\varphi_o,k_o) - \frac{1}{|t_o|}\sqrt{(1-t_o^2)(t_o^2-m_t^2)}\right]$$

which is directly proportional to y, is obtained. This function and f_4 have been derived by other methods in reference 10, and are utilized in reference 6 to calculate approximate values for the damping in roll and pitch for swept-back wings with subsonic trailing edges.

$$\left.\begin{aligned} d(\Delta P_R'') &= -\frac{1}{\pi}\left(\frac{dP_{R_A}}{da}\right)\cos^{-1}\chi''da - \frac{1}{\pi}\left(\frac{dP_{R_A}}{da}\right)\frac{y-y_A}{y_A}\frac{a}{t}\frac{m_t-t}{m_t-a}\left(\cos^{-1}\chi'' - \right. \\ &\quad \left. \frac{t-a}{t-m_t}\frac{1-m_t}{1-a}\sqrt{1-\chi''^2}\right)da \\ &= d\left(\Delta P_{R_1}''\right) + d\left(\Delta P_{R_2}''\right) \end{aligned}\right\} \quad (8)$$

where

$$\chi'' = \frac{(1-a)(t-m_t) - (m_t-a)(1-t)}{(1-m_t)(t-a)}$$

and where P_{R_A} is the pressure in steady roll at a point $A(x_A,y_A)$ on the trailing edge defined by

$$x_A = \frac{m_t c_o}{m_t-a}$$

$$y_A = \frac{m_t c_o a}{\beta(m_t-a)}$$

Equation (8) is seen to be made up of two components, the first $\left(\Delta P_{R_1}''\right)$ conical, and the second $\left(\Delta P_{R_2}''\right)$ quasi conical [due to the term $(y-y_A)/y_A$].

Equation (8) defines an oblique sector of infinitesimal pressure to be superposed on the basic pressure in the wake. As shown in figure 1(b), each sector has an apex at the point $A(x_A,y_A)$ on the trailing edge, a base at an infinite distance downstream, and is bounded on one side by the ray a and on the other by the trailing edge. This expression can be used to cancel pressures due either to roll or pitch; however, for the case of pitch it is necessary to rewrite the equation in terms of x and x_A rather than y and y_A. Thus, by substituting

$$\frac{x-x_A}{x_A} = \frac{a}{t}\frac{y-y_A}{y_A}$$

and by replacing P_R with P_P, equation (8) is transformed to

$$\left.\begin{aligned} d(\Delta P_P'') &= -\frac{1}{\pi}\left(\frac{dP_{P_A}}{da}\right)\cos^{-1}\chi''da - \frac{1}{\pi}\left(\frac{dP_{P_A}}{da}\right)\frac{x-x_A}{x_A}\frac{m_t-t}{m_t-a}\left(\cos^{-1}\chi'' - \right. \\ &\quad \left. \frac{t-a}{t-m_t}\frac{1-m_t}{1-a}\sqrt{1-\chi''^2}\right)da \\ &= d\left(\Delta P_{P_1}''\right) + d\left(\Delta P_{P_2}''\right) \end{aligned}\right\} \quad (9)$$

The field of pressure represented by equation (9) is illustrated in figure 4, in which the lower portion of the pressure corresponds to the conical component and the upper portion to the quasi-conical component. The region of the pressure which overlaps the wing is shown by the dotted lines.

The total effect upon the pressure at a point $P(x,y)$ on the right wing of canceling the field of basic pressure in the wake in excess of the pressure canceled by equations (4) and (7) is found by integrating equation (9) between the limits $a=0$ and $a=a_o$. The upper limit a_o represents the rearmost sector, the Mach cone of which passes through the point $P(x,y)$ (fig.1(b)), and is defined in reference 7 as

$$a_o = m_t \frac{\beta y + c_o - x}{\beta y + m_t c_o - x} \tag{10}$$

Also, for x_A located on the trailing edge, it can be shown that

$$\frac{x-x_A}{x_A}\,\frac{m_t-t}{m_t-a} = \frac{m_t x-\beta y}{m_t c_o} - 1$$

Hence, for the basic pressure in region I, the second part of the primary correction becomes

$$\left.\begin{aligned}
\Delta P_P'' &= -\frac{1}{\pi}\int_0^{a_o}\left(\frac{dP_{P_A}}{da}\right)\cos^{-1}\chi''\,da - \\
&\quad \frac{1}{\pi}\int_0^{a_o}\left(\frac{dP_{P_A}}{da}\right)\left(\frac{m_t x-\beta y}{m_t c_o}-1\right)\left(\cos^{-1}\chi''-\frac{t-a}{t-m_t}\,\frac{t-m_t}{1-a}\sqrt{1-\chi''^2}\right)da \\
&= \Delta P_{P_1}'' + \Delta P_{P_2}''
\end{aligned}\right\} \tag{11}$$

where

$$\frac{dP_{P_A}}{da} = \left(\frac{qc_o}{2V}\right)\frac{8m_t}{\beta R}\left[\frac{2m^4-3m^2a^2+a^3m_t}{(m_t-a)^2(m^2-a^2)^{3/2}}\right]$$

A graphical method of integration is recommended for solving equation (11). The separate conical and quasi-conical components will be retained throughout the remainier of the analysis in order to show their relative magnitudes when applying the method to a typical configuration.

Equations (4), (7), and (11) therefore comprise the complete set of primary corrections to be added to the basic pressure in region I adjacent to the subsonic trailing edge. They are only partial corrections for region III, which is also affected by the cancellation of pressure outboard of the tips and by the cancellation of certain secondary pressures to be discussed later.

Primary corrections due to basic-pressure cancellation outboard of tips.- In general, the excess basic pressure outboard of any subsonic boundary (except the leading edge or a tip with positive rake) may be canceled either wholly or in part by means of equation (9). This expression can be readily modified to conform with the boundary conditions of the excess basic pressure outboard of the tips. The section of this excess pressure at the tip is shown in figure 2(b). With reference to figure 5 and noting that the wing lies in the negative range of t of each sector of infinitesimal canceling pressure to be superposed outboard of the tips, it is seen that to apply equation (9) to the tip it is necessary only to substitute $-m_s$, $-t$, and $-a$ for m_t, t, and a, respectively. Thus, for a right-hand tip with zero rake $(m_s=0)$,

$$\left.\begin{aligned} d(\Delta P_P''') &= -\frac{1}{\pi}\left(\frac{dP_{P_A}}{da}\right)\cos^{-1}\chi'''\,da - \\ &\quad \frac{1}{\pi}\left(\frac{dP_{P_A}}{da}\right)\frac{x-x_A}{x_A}\frac{t}{a}\left[\cos^{-1}\chi''' - \frac{t-a}{t(1+a)}\sqrt{1-\chi'''^2}\right]da \\ &= d\left(\Delta P_{P_1}'''\right) + d\left(\Delta P_{P_2}'''\right) \end{aligned}\right\} \qquad (12)$$

where χ'' reduces to

$$\chi''' = \frac{a+t+2at}{t-a}$$

and where

$$x_A = \frac{\beta s}{a}$$

$$\frac{dP_{P_A}}{da} = \left(\frac{qc_o}{2V}\right)\frac{8m_t}{\beta R}\left[\frac{2m^4-3m^2a^2+a^3m_t}{(m_t-a)^2(m^2-a^2)^{3/2}}\right]$$

The sector of infinitesimal canceling pressure represented by equation (12) is shown in figure 5. In this analysis only the tip with zero rake is considered; however, the tip with negative rake can be treated in an analogous manner. The correction for the tip with positive rake along which the pressure is infinite, although not considered herein, can be calculated by adapting to the present case the method given in reference 8 for the case of steady lift.

The total effect on the pressure at a point $P(x,y)$ of canceling all the pressure outboard of the tip, as shown in figure 5, is found

by integrating equation (12) between the limits $a=a_o$ and $a=m$, where a_o for the tip is given in reference 7 as

$$a_o = \frac{\beta s}{x+\beta(y-s)}$$

It is noted that the term dP_{P_A}/da becomes infinite at the upper limit of integration m; therefore, the integration should be made according to the method of reference 7. This method leads to the expression

$$\Delta P_P''' = -\frac{1}{\pi}\int_{a_o}^{m} P_{P_A}\frac{d}{da}\left(\cos^{-1}\chi'''\right) da -$$

$$\frac{1}{\pi}\int_{a_o}^{m} P_{P_A}\frac{d}{da}\left[\frac{x-x_A}{x_A}\frac{t}{a}\left(\cos^{-1}\chi''' - \frac{t-a}{t(1+a)}\sqrt{1-\chi'''^2}\right)\right] da$$

which, after substituting the expression for P_{P_A} from equation (3), reduces to

$$\left.\begin{aligned}\Delta P_P''' &= -\left(\frac{qc_o}{2V}\right)\frac{8}{\pi\beta R}\sqrt{\frac{a_o(s-y)}{s}}\left[\int_{a_o}^{m}\frac{x_A}{c_o}\frac{(\beta y+x)(2m^2-a^2)}{(\beta y-ax)\sqrt{(m^2-a^2)(a-a_o)(1+a)}}da+\right.\\ &\left.\int_{a_o}^{m}\frac{x_A}{c_o}\frac{a-a_o}{a_o(1+a)}\frac{(\beta y+x)(2m^2-a^2)}{(\beta y-ax)\sqrt{(m^2-a^2)(a-a_o)(1+a)}}da\right]\\ &= \Delta P_{P_1}''' + \Delta P_{P_2}'''\end{aligned}\right\}\quad(13)$$

The first integral represents the conical portion of the canceling pressure, and the second integral, the quasi-conical portion. Equation (13) has been integrated in terms of elliptic functions in Appendix A. This equation therefore becomes the primary correction for the basic pressure at points contained within the Mach lines from the tip of the leading edge (region II, and region III in part).

In Appendix A, it is interesting to note that along the Mach line originating at the tip of the leading edge (corresponding to $a_o=m$) the conical part of the primary correction for the tip does not reduce to zero. This correction therefore represents an abrupt drop in pressure which, as is shown in the following illustrative example, is sufficiently large to cancel nearly all the basic pressure between the Mach line and the tip. Similar effects were noted in the cases of steady lift and steady roll.

Secondary corrections.– Thus far, by means of equations (4), (7), (11), and (A5), all the excess basic pressure in the wake and outboard of the tips has been eliminated. However, since the canceling sectors used in the process are also infinite in extent, still further, although much smaller, excess pressures are again introduced in certain regions in the wake and outboard of the tips. For example, as shown in figure 6 for the right half of the wing, excess secondary pressure will be added to the shaded region outboard of the tip and, in some cases, forward of the leading edge as a result of superposing the symmetrical and oblique canceling sectors along the trailing edges. In a like manner, excess secondary pressure still remains in small regions downstream from the trailing edge after canceling the basic pressure outboard of the tips, as shown for the left half of the wing in figure 6 (the secondary pressure in extreme cases overlapping the opposite wing panel, as shown). A rigorous mathematical analysis would require the cancellation of these secondary pressures and, in turn, the successively smaller excess pressure introduced by canceling the secondary pressures, and so on. The details of canceling these secondary and lesser pressures by numerical methods are discussed in references 7 and 8; but, since the procedure is rather complicated and leads to only minor improvement of the final value, approximate methods will be utilized here.[8] Thus, if the secondary pressure is neglected, the pressure along the portion of the tip and trailing edge affected by the secondary pressure will not have been reduced to zero. The magnitude of this error becomes evident after calculating the chordwise pressure distributions along sections near the tip. The secondary correction for the error can then be easily estimated using, as guides, the trends of the primary corrections. As shown in figure 1, the regions in which the secondary corrections apply are located between the wing boundaries and the Mach lines reflected from the points where the Mach line from the tip of the leading edge intersects the trailing edge, and where the Mach line from the apex of the trailing edge intersects the tip. The excess secondary pressure adjacent to the leading edge is neglected in cases in which the Mach lines from the trailing-edge apex intersect the leading edge. This approximate procedure is sufficiently accurate from a practical standpoint, as will be shown in the following illustrative case. The effect on the pressure distribution of secondary pressure existing upstream from the leading edge is not treated here, but is believed, on the basis of the results given in reference 8 for the lifting case, to be small enough to be neglected.

Violations of downwash boundary conditions.– Although the equations for the sectors of canceling pressure in general do satisfy the boundary requirements for the pressure, they do not in every case comply with the condition that the downwash flow on the wing be zero in order that the wing be flat. As discussed in reference 7, the terms $\cos^{-1}\chi''$ and

[8]It should be noted also that a detailed analysis of the small secondary corrections would not be fully justified in view of the possible significant effects of viscosity, which are not considered in the present analysis.

$\sqrt{1-X''^2}$ in the expression for a single oblique canceling sector for the wake (equation (9)) have a real part, which corresponds to pressure, and an imaginary part, which corresponds to downwash. For these oblique sectors, the real parts are zero only in the range $-1 \leq t \leq a$, and the imaginary parts are zero only in the range $m_t \leq t \leq 1$. It is observed that some of the rays (in the negative range of t) from the sectors near the apex of the trailing edge of one wing panel (say the right panel in fig. 1) will pass over the opposite wing panel, thus introducing some downwash flow on that panel. The same effects occur on both panels, but the regions of the wing and the amount of the downwash flow involved, in general, are small. Hence, some inaccuracies in the cancellation procedure are unavoidable, but they are believed to be insignificant in the final result.

Illustrative application.– To illustrate the application of the foregoing analysis, the pressure distributions along chordwise sections A–A and B–B and along spanwise sections C–C, D–D, and E–E of the wing in figure 1 have been calculated and the results plotted in figure 7. In this example, the y axis is assumed to be the axis of pitch. For comparison of their magnitudes, the conical and quasi-conical terms in the trailing-edge and tip corrections are shown individually in parts (a) and (b), where it is observed that, in general, the quasi-conical terms are small compared to the conical terms. Both for this reason and because they involve a considerable portion of the computing time, the quasi-conical components probably can be dropped in most practical cases. The procedure for calculating the pressure distribution then becomes essentially the same as that outlined in references 7 and 8 for steady lift.

A close approximation to the pressure distribution in steady pitch, therefore, may be calculated by the following steps:

1. Calculation of the basic pressure distribution for the entire wing by means of equation (3)

2. Correction of the basic pressure between the subsonic trailing edge and the Mach line from the apex of the trailing edge (regions I and III) by means of equations (4), (7), and (11)

3. Correction of the basic pressure between the subsonic tip and the Mach line from the tip of the leading edge (regions II and III) by means of equation (A5)

4. Estimation of the secondary corrections between the wing boundaries and the reflected Mach lines from the trailing edge and tip, using as guides the trends of the primary corrections in steps 2 and 3

5. Addition of the necessary lifting pressure in accordance with equation (1)

Where less accuracy is required, equation (7) and the quasi-conical terms in equations (11) and (A5) may be omitted. If the region between the wing boundaries and the reflected Mach lines is small, then step 4 may also be excluded.

Derivative for Damping in Pitch

The derivative for the damping in steady pitch is calculated in the same manner as the pressure distribution; that is, the basic uncorrected value will first be determined based upon the expressions for the pressure distribution of triangular wings, and then primary and secondary corrective terms resulting from the cancellation of the excess pressure in the wake and outboard of the tips will be added. As before, the conical and quasi-conical components are developed separately in order to ascertain their relative magnitudes.

If the distribution of pressure is known, as well as the corresponding moment arm to the center of pressure of any sector of the wing, the damping moment in pitch for the basic plan form and for the separate regions affected by the cancellation of the exterior pressure can be readily calculated about some particular lateral axis. The spanwise axis passing through the center of gravity (assumed to lie on the x axis) has been chosen in this analysis. However, since the pressure distribution is based on a pitching velocity about the y axis, the choice of any axis other than the y axis requires a computation of the additional angle-of-attack corrections given in equation (2). Hence, the damping derivative calculated in the following sections is not, in itself, complete, except when the center of gravity lies at the leading-edge apex.

Basic value for the damping derivative.- With reference to figure 8, it is seen that an increment of damping moment due to the basic pressure, which is quasi conically distributed with respect to the y axis on an element of area $(dS/da)da$, is equal to the product of the resultant force dZ and the moment arm $\bar{x}$, the value of $\bar{x}$ being $(\frac{3}{4}x_A - x_{c.g.})$. Thus, from equation (3) and taking into account both halves of the wing

$$\begin{aligned} dM &= -2\,\bar{x}dZ \\ &= -2\left(\frac{3}{4}x_A - x_{c.g.}\right)\left[\left(\frac{1}{2}\rho V^2\right)\frac{2}{3}\left(\frac{qc_o}{2V}\right)\frac{8}{\beta R}\frac{x_A}{c_o}\frac{2m^2-a^2}{\sqrt{m^2-a^2}}\left(\frac{dS}{da}\right)da\right] \end{aligned} \tag{14}$$

In this equation, the resultant force is based on an average pressure equal to two-thirds of the pressure at the point x_A, y_A at the end of the sector. The total moment is found by integrating this expression over the two ranges, $0 \leq a \leq a_t$, for which (from reference 7)

$$x_A = \frac{m_t c_o}{m_t - a}$$

$$\frac{dS}{da} = \frac{m_t^2 c_o^2}{2\beta(m_t - a)^2}$$

and $a_t \leq a \leq m$, for which

$$x_A = \frac{\beta s}{a}$$

$$\frac{dS}{da} = \frac{\beta s^2}{2a^2}$$

Equation (14) has been integrated numerically in Appendix B where it is expressed in the form of the damping-in-pitch derivative, that is,

$$C_{m_q} = \frac{\partial C_m}{\partial\left(\frac{qc_o}{2V}\right)} = \frac{\partial}{\partial\left(\frac{qc_o}{2V}\right)}\left[\frac{M}{\left(\frac{1}{2}\rho V^2\right)Sc_o}\right] \tag{15}$$

Since the pressure coefficient and the parameter $\left(\frac{qc_o}{2V}\right)$ are directly related in the linearized potential theory, the derivative may be written as

$$C_{m_q} = \frac{1}{\left(\frac{qc_o}{2V}\right)}\frac{M}{\left(\frac{1}{2}\rho V^2\right)Sc_o}$$

The tapered $(m \neq m_t)$ and the untapered $(m = m_t)$ swept-back plan forms are treated separately. The result in each case represents the basic uncorrected value of the damping derivative, to which must be added the following primary and secondary corrections due to the cancellation of the basic and secondary pressure in the wake and outboard of the tips.

Primary corrections due to cancellation of basic pressure in wake.- If the trailing edges are subsonic, it is necessary to correct the basic value of the damping derivative for the effect of canceling the excess basic pressure in the wake by use of the oblique and symmetrical sectors of pressure. Considering first the portion of the basic pressure canceled by the symmetrical sectors, the increment of force on an element of wing area $(dS/dt_o)dt_o$ due to the cancellation of the conical component is

$$dZ_1' = \left(\frac{1}{2}\rho V^2\right)\frac{P_{P_o}}{K_o}F(\varphi_o,k_o)\left(\frac{dS}{dt_o}\right)dt_o$$

That due to the quasi-conical component is

$$dZ_2' = \frac{2}{3}\left(\frac{1}{2}\rho V^2\right) P_{P_o} \frac{x_s - c_o}{c_o} \frac{2}{\pi} \left\{ F(\varphi_o,k_o) - \right.$$

$$\left. \left|\frac{t_o}{m_t}\right| \sin^{-1}\sqrt{\frac{m_t^2(1-t_o^2)}{t_o^2(1-m_t^2)}} - \frac{K_o-(\pi/2)}{K_o-E_o}\left[F(\varphi_o,k_o)-E(\varphi_o,k_o)\right] \right\}\left(\frac{dS}{dt_o}\right) dt_o$$

in which the average pressure is two-thirds of the maximum value at the tip (or leading-edge) end of the element of area. As illustrated in figure 9, the moment arms of the two respective forces are

$$\bar{x}_1' = c_o + \frac{2}{3}(x_s - c_o) - x_{c.g.}$$

$$\bar{x}_2' = c_o + \frac{3}{4}(x_s - c_o) - x_{c.g.}$$

giving the increments of induced moment

$$dM_1' = \bar{x}_1' \, dZ_1'$$

$$dM_2' = \bar{x}_2' \, dZ_2'$$

The total induced moment on the wing is found by integrating these two equations between the limits m_t and 1. If the rays t_o intersect the leading edge as well as the tip, the integration must be performed separately over the two ranges $m_t \leq t_o \leq m_o$ and $m_o \leq t_o \leq 1$, where m_o, as shown in figure 1(b), designates the ray passing through the tip of the leading edge (i.e., $m_o = \beta ms/(\beta s - mc_o)$). For $t_o \leq m_o$

$$x_s = \frac{\beta s}{t_o} + c_o$$

$$\frac{dS}{dt_o} = \frac{\beta s^2}{2t_o^2}$$

while for $t_o \geq m_o$

$$x_s = \frac{c_o m}{t_o - m} + c_o$$

$$\frac{dS}{dt_o} = \frac{m^2 c_o^2}{2\beta(t_o - m)^2}$$

Based upon these values, the damping correction, expressed in derivative form, to be added to the basic derivative therefore becomes

$$\Delta C_{m_q}{}' = \Delta C_{m_{q_1}}{}' + \Delta C_{m_{q_2}}{}'$$

where

$$\Delta C_{m_{q_1}}{}' = \left(\frac{b^2}{S}\right)\frac{4m}{R}\left[\int_{m_t}^{m_o}\left(1 + \frac{2}{3}\frac{\beta s}{t_o c_o} - \frac{x_{c.g.}}{c_o}\right)\frac{1}{t_o{}^2}\frac{F(\varphi_o,k_o)}{K_o}\,dt_o + \right.$$

$$\left.\left(\frac{mc_o}{\beta s}\right)^2\int_{m_o}^{1}\left(1 + \frac{2}{3}\frac{m}{t_o-m} - \frac{x_{c.g.}}{c_o}\right)\frac{1}{(t_o-m)^2}\frac{F(\varphi_o,k_o)}{K_o}\,dt_o\right] \quad (16)$$

$$\Delta C_{m_{q_2}}{}' = \left(\frac{b^2}{S}\right)\frac{8m}{3R}\frac{\beta s}{c_o}\left[\int_{m_t}^{m_o}\left(1 + \frac{3}{4}\frac{\beta s}{t_o c_o} - \frac{x_{c.g.}}{c_o}\right)\frac{1}{t_o{}^3}\frac{2}{\pi}\left\{F(\varphi_o,k_o) - \right.\right.$$

$$\left.\left|\frac{t_o}{m_t}\right|\sin^{-1}\sqrt{\frac{m_t{}^2(1-t_o{}^2)}{t_o{}^2(1-m_t{}^2)}} - \frac{K_o-(\pi/2)}{K_o-E_o}\left[F(\varphi_o,k_o) - E(\varphi_o,k_o)\right]\right\}dt_o + $$

$$\left(\frac{mc_o}{\beta s}\right)^3\int_{m_o}^{1}\left(1 + \frac{3}{4}\frac{m}{t_o-m} - \frac{x_{c.g.}}{c_o}\right)\frac{1}{(t_o-m)^3}\frac{2}{\pi}\left\{F(\varphi_o,k_o) - \right.$$

$$\left.\left.\left|\frac{t_o}{m_t}\right|\sin^{-1}\sqrt{\frac{m_t{}^2(1-t_o{}^2)}{t_o{}^2(1-m_t{}^2)}} - \frac{K_o-(\pi/2)}{K_o-E_o}\left[F(\varphi_o,k_o) - E(\varphi_o,k_o)\right]\right\}dt_o\right] \quad (17)$$

If m_o is greater than 1, the second integrals in equations (16) and (17) are not required. The equations should be integrated by a graphical method.

The damping correction due to the cancellation of the basic pressure in the wake in excess of that canceled by equations (16) and (17) is calculated in a similar manner. The induced moment on the wing due to a

single oblique canceling sector originating at a point $A(x_A,y_A)$ on the trailing edge is first determined, and then the total moment is found by integrating the effects of all the oblique sectors superposed along the trailing edge. The two resultant forces, one (dZ_1'') arising from the conical portion of the canceling pressure and the other (dZ_2'') from the quasi-conical portion, acting on an element of wing area $(dS/dt)dt$ are shown in figure 10 for a single oblique sector. Considering first the case in which none of the rays from the oblique sectors intersect the leading edge, the average quasi-conical pressure is two-thirds the maximum value at the tip end of the element (for which $x - x_A$ is equal to $\beta(s-y_A)/t$), and the two increments of force from equation (9) become

$$dZ_1'' = \left(\frac{1}{2}\rho V^2\right)\frac{1}{\pi}\left(\frac{dP_{P_A}}{da}\right) da \cos^{-1}\chi''\left(\frac{dS}{dt}\right) dt$$

$$dZ_2'' = \left(\frac{1}{2}\rho V^2\right)\frac{2}{3}\frac{1}{\pi}\left(\frac{dP_{P_A}}{da}\right) da \frac{\beta(s-y_A)}{tx_A}\frac{m_t-t}{m_t-a}\left(\cos^{-1}\chi'' - \frac{t-a}{t-m_t}\frac{1-m_t}{1-a}\sqrt{1-\chi''^2}\right)\left(\frac{dS}{dt}\right) dt$$

The two respective moment arms are seen from figure 10 to be

$$\bar{x}_1'' = x_A + \frac{2}{3}\frac{\beta(s-y_A)}{t} - x_{c.g.}$$

$$\bar{x}_2'' = x_A + \frac{3}{4}\frac{\beta(s-y_A)}{t} - x_{c.g.}$$

The term dS/dt is given in reference 7 as

$$\frac{dS}{dt} = \frac{\beta m_t^2 s^2}{2a_t^2 t^2}\left(\frac{a_t-a}{m_t-a}\right)^2$$

The two increments of induced moment due to a single oblique sector therefore become

$$dM_1'' = \bar{x}_1''\, dZ_1''$$

$$dM_2'' = \bar{x}_2''\, dZ_2''$$

The total induced moment due to a single sector is now found by integrating these expressions with respect to t over the range $m_t \leq t \leq 1$

on the wing. A second integration with respect to a over the range $-a_t \leq a \leq a_t$ then gives the total moment due to all the sectors superposed along the trailing edges. Therefore the correction, expressed in derivative form, for the region adjacent to a subsonic trailing edge (regions I and III in fig. 1) becomes

$$\Delta C_{m_q}'' = \Delta C_{m_{q_1}}'' + \Delta C_{m_{q_2}}''$$

$$= \frac{2}{\left(\frac{qc_o}{2V}\right) Sc_o} \left\{ \int_0^{a_t} \int_{m_t}^{1} \bar{x}_1'' \left(\frac{dP_{P_A}}{da}\right) \frac{1}{\pi} \cos^{-1} \chi'' \left(\frac{dS}{dt}\right) dt da + \right.$$

$$\int_0^{a_t} \int_{m_t}^{1} \bar{x}_2'' \left(\frac{dP_{P_A}}{da}\right) \frac{1}{\pi} \frac{2}{3} \frac{\beta}{t} \frac{s-y_A}{x_A} \frac{m_t-t}{m_t-a} \left[\cos^{-1} \chi'' - \right.$$

$$\left. \left. \frac{t-a}{t-m_t} \frac{1-m_t}{1-a} \sqrt{1-\chi''^2} \right] \left(\frac{dS}{dt}\right) dt da \right\} \tag{18}$$

The results of the integration of equation (18) with respect to t are given in Appendix C (case I); however, a graphical method of integration with respect to a is required for the complete solution.

Configurations, in which the Mach lines from the canceling sectors in the lower range of a intersect the leading edge, require additional calculations for the range $m_a \leq t \leq 1$, in which $t = m_a$ $(m_a < 1)$ is defined as the ray passing through the points $A(x_A,y_A)$ and the tip of the leading edge (fig. 1(b)), that is,

$$m_a = \beta \frac{s - y_A}{\frac{\beta s}{m} - x_A}$$

Thus, the integration with respect to t must be made over the two ranges $m_t \leq t \leq m_a$ and $m_a \leq t \leq 1$. If only the conical pressure terms are considered, the area and center of pressure of an incremental sector in the range $m_a \leq t \leq 1$ are

$$\frac{dS}{dt} = \frac{x_A^2 (m - a)^2}{2\beta (t - m)^2}$$

$$\bar{x}_1'' = x_A \left(1 + \frac{2}{3} \frac{m - a}{t - m}\right) - x_{c.g.}$$

This range disappears for those sectors which have Mach lines passing downstream from the tip of the leading edge, the limiting sector being defined by the ray a_l (fig. 1(b)), where

$$a_l = \frac{1 - (\beta s/c_o m)(1-m)}{1 - (\beta s/m_t m c_o)(1-m)}$$

Hence for $a \geq a_l$, equation (18) applies. The damping correction for the region $0 \leq a \leq a_l$ is calculated also in Appendix C (case II), but only for the conical pressures since the quasi-conical pressures have been shown to be negligibly small.

The complete correction to the damping derivative resulting from the cancellation of all the basic pressure in the wake is comprised of equations (16), (17), and (C2) (or (C6) or (C7), as required), in which the conical and quasi-conical terms are retained as separate components.

Primary corrections due to cancellation of basic pressure outboard of tips.- The primary correction for a subsonic tip with zero rake can be calculated in a manner similar to that for a subsonic trailing edge. The forces dZ_1''' and dZ_2''' on an element of wing area at the tip due to the conical and quasi-conical components of the canceling pressure, together with the respective moment arms, are shown in figure 11. The force dZ_2''' corresponds to an average pressure equal to two-thirds of the maximum pressure at the point of intersection of the ray t and the trailing edge, for which

$$\frac{x - x_A}{x_A} = \frac{am_t}{t - m_t}\left(\frac{1}{a} - \frac{1}{a_t}\right)$$

From equation (12),

$$dZ_1''' = \left(\frac{1}{2}\rho V^2\right) \frac{1}{\pi} \left(\frac{dP_{P_A}}{da}\right) da \cos^{-1} \chi''' \left(\frac{dS}{dt}\right) dt$$

$$dZ_2''' = \left(\frac{1}{2}\rho V^2\right) \frac{1}{\pi} \left(\frac{dP_{P_A}}{da}\right) da \frac{2}{3} \frac{am_t}{t-m_t}\left(\frac{1}{a} - \frac{1}{a_t}\right)\frac{t}{a}\left[\cos^{-1} \chi''' - \frac{t-a}{t(1+a)} \sqrt{1-\chi'''^2}\right]\left(\frac{dS}{dt}\right) dt$$

in which

$$\frac{dS}{dt} = \frac{\beta m_t^2 s^2}{2}\left(\frac{1}{a_t} - \frac{1}{a}\right)^2 \frac{1}{(m_t - t)^2}$$

The respective moment arms are

$$\bar{x}_1''' = \beta s \left[\frac{1}{a} + \frac{2}{3} \frac{m_t}{t - m_t} \left(\frac{1}{a} - \frac{1}{a_t} \right) \right] - x_{c.g.}$$

$$\bar{x}_2''' = \beta s \left[\frac{1}{a} + \frac{3}{4} \frac{m_t}{t - m_t} \left(\frac{1}{a} - \frac{1}{a_t} \right) \right] - x_{c.g.}$$

Therefore, the primary correction to the basic damping derivative for regions II and III at the tip becomes

$$\Delta C_{m_q}''' = \Delta C_{m_{q_1}}''' + \Delta C_{m_{q_2}}'''$$

$$= \frac{2}{\left(\frac{qc_o}{2V}\right) Sc_o} \left\{ \int_{a_t}^{m} \int_{-1}^{o} \bar{x}_1''' \left(\frac{dP_{P_A}}{da}\right) \frac{1}{\pi} \cos^{-1} \chi''' \left(\frac{dS}{dt}\right) dtda + \right.$$

$$\int_{a_t}^{m} \int_{-1}^{o} \bar{x}_2''' \left(\frac{dP_{P_A}}{da}\right) \frac{1}{\pi} \frac{2}{3} \frac{am_t}{t-m_t} \left(\frac{1}{a} - \frac{1}{a_t}\right) \frac{t}{a} \left[\cos^{-1} \chi''' - \right.$$

$$\left. \left. \frac{t-a}{t(1+a)} \sqrt{1-\chi'''^2} \right] \left(\frac{dS}{dt}\right) dtda \right\} \tag{19}$$

An analytical integration of equation (19) with respect to t in the range $-1 \leq t \leq 0$ is given in Appendix D. A suitable graphical method for integrating the resultant expression with respect to a (as outlined in reference 7) is also included. The tapered and untapered cases are considered separately.

Secondary corrections.– As discussed previously with regard to the pressure distribution, the calculation of the damping derivative, to be complete, should include corrections for the secondary and smaller pressures. This is most simply accomplished by estimating the magnitude of the excess loading at the tip between the secondary (reflected) Mach lines and the edges of the wing (see diagrams of the pressure distribution) and the distance from the pitching axis to the center of loading. For practical purposes, the excess pressure on the wing may be assumed to vary linearly from the maximum value along the wing boundary to zero along the Mach line. The excess pressure along the tip is equal in magnitude to the correction due to the cancellation of basic pressure in the wake; and that along the trailing edge, to the correction due to the

cancellation of basic pressure outboard of the tips. The excess pressure upstream from the leading edges may, in general, be neglected. This approximate method has been used in the following illustrative example.

Illustrative example.– The derivative for the damping in pitch of the configuration shown in figure 1 has been calculated using equations (B4), (C2), (D3), (16), and (17) and the procedure given in the preceding paragraph for calculating the secondary correction. For this example the center of gravity is assumed to be located at the apex of the leading edge. The results are presented in table I, in which the conical and quasi-conical components are shown individually.

It is apparent that the contribution to the total correction of the quasi-conical terms is only a small portion of the final value of the damping derivative and therefore may be dropped in many practical cases. The estimated secondary correction in some cases may also be insignificant, particularly those in which the wing is considerably tapered. If such approximations are warranted, then possibly the simpler method of reference 6 for canceling the excess pressure in the wake may be used.

The calculation of the damping derivative therefore can be accomplished in the following steps:

1. Computation of the basic value for the over-all plan form by means of equation (B3) (or (B4))

2. Correction of the basic value for the effect of a subsonic trailing edge by means of equations (16), (17), and (C2) (or (C6) or (C7), as required), dropping the quasi-conical terms where feasible

3. Correction of the basic value for the effect of a subsonic tip by means of equation (D3), dropping the quasi-conical terms where feasible

4. Estimation of the secondary correction for the excess secondary pressures as outlined, if required

5. Addition of the angle-of-attack corrections in accordance with equation (2)

This procedure follows closely those procedures given in reference 7 for the lifting case and in reference 9 for the rolling case.

CONCLUDING REMARKS

Through use of the method of the superposition of conical flows, the calculation of the pressure distribution and the derivative for the damping

in steady pitch has been extended to include swept-back wings having all edges subsonic (provided they are also straight). The method presented is rigorous if carried out in detail, but for most practical purposes it can be shortened considerably by neglecting certain less significant terms in the final results. The method resulting from such simplification parallels closely those methods presented for swept-back wings in reference 7 for the case of lift and in reference 9 for the case of roll.

Although this analysis does not include wings having positive or negative rake at the tips, it can be easily adapted to wings having negative rake. The analysis is not complete for configurations in which the Mach lines originating at the trailing edge intersect the leading edge; however, the results given for such cases are believed to be sufficiently accurate for most applications.

The analysis has shown that abrupt changes in pressure should occur along the various primary and reflected Mach lines on the wing, especially those originating at the tips of the leading edge. Such effects have been found previously for wings at constant angle of attack and in steady roll. It should be noted, however, that such discontinuities in pressure are not compatible with the flow that would be found on wing surfaces in a viscous fluid. There is evidence that, because of the presence of a boundary layer on the wing surfaces, the pressure changes are much more gradual than those given by the foregoing theory. In particular, it is believed that a rigorous numerical analysis of the secondary corrections for the pressure and damping derivative (for region III in fig. 1(a)), because of the moderating effect of the viscosity, would not be justified from a practical standpoint. For this reason, approximate methods for calculating the secondary corrections were utilized in the present report.

Ames Aeronautical Laboratory,
National Advisory Committee for Aeronautics,
Moffett Field, Calif., May 12, 1950.

APPENDIX A

INTEGRATION OF PRESSURE CORRECTION DUE TO CANCELLATION OF BASIC PRESSURE OUTBOARD OF TIP

The equation for the correction for the basic pressure in the vicinity of a streamwise tip due to the cancellation of basic pressure outboard of the tip (equation (13)), namely,

$$\Delta P_p''' = -\left(\frac{qc_o}{2V}\right)\frac{8}{\pi\beta R}(\beta y+x)\sqrt{\frac{a_o(s-y)}{s}}\left\{\int_{a_o}^{m}\left(\frac{x_A}{c_o}\right)\frac{2m^2-a^2}{(\beta y-ax)\sqrt{(m^2-a^2)(a-a_o)(1+a)}}da+\right.$$

$$\left.\int_{a_o}^{m}\left(\frac{x_A}{c_o}\right)\left[\frac{a-a_o}{a_o(1+a)}\right]\frac{2m^2-a^2}{(\beta y-ax)\sqrt{(m^2-a^2)(a-a_o)(1+a)}}\,da\right\} \qquad \text{(A1)}$$

can be integrated in terms of elliptic integrals in the following manner: Substituting $\frac{x_A}{c_o} = \frac{\beta s}{c_o a}$ gives

$$\Delta P_p''' = -\left(\frac{qc_o}{2V}\right)\frac{8}{\pi R}\frac{s}{c_o}(\beta y+x)\sqrt{\frac{a_o(s-y)}{s}}\left[\int_{a_o}^{m}\frac{m^2}{a(\beta y-ax)\sqrt{(m^2-a^2)(a-a_o)(1+a)}}da+\right.$$

$$\int_{a_o}^{m}\frac{(m+a)(m-a)}{a(\beta y-ax)\sqrt{(m^2-a^2)(a-a_o)(1+a)}}da+$$

$$\int_{a_o}^{m}\frac{a-a_o}{a_o(1+a)}\frac{m^2}{a(\beta y-ax)\sqrt{(m^2-a^2)(1+a)(a-a_o)}}da+$$

$$\left.\int_{a_o}^{m}\frac{a-a_o}{a_o(1+a)}\frac{(m+a)(m-a)}{a(\beta y-ax)\sqrt{(m^2-a^2)(a-a_o)(1+a)}}da\right] \qquad \text{(A2)}$$

Equation (A2) may be expressed in terms of elliptic integrals by substituting

$$\left.\begin{aligned} \operatorname{sn} u &= \sqrt{\frac{(a_o+1)(m-a)}{(a+1)(m-a_o)}} \\ k &= \sqrt{\frac{(m-a_o)(1-m)}{2m(1+a_o)}} \end{aligned}\right\} \tag{A3}$$

Thus,

$$\begin{aligned} \Delta P_{P'''} = -\left(\frac{qc_o}{2V}\right)\frac{16}{\pi R}\frac{s}{c_o}\frac{\beta y+x}{\beta y-mx}\frac{m}{\sqrt{2m(1+a_o)}}\sqrt{\frac{a_o(s-y)}{s}}\Bigg\{&\frac{2bk^2(1+m)-f^2}{bh}\int_0^K du + \\ &\frac{(h-f)^2-2b(1+m)(h+k^2)}{h(h+b)}\int_0^K \frac{du}{1+h\operatorname{sn}^2 u} + \\ &\frac{(b+f)^2+2b(1+m)(b-k^2)}{b(h+b)}\int_0^K \frac{du}{1-b\operatorname{sn}^2 u} + \\ &\frac{m-a_o}{a_o(1+m)}\Bigg[\frac{2bk^2(1+m)-f^2}{bh}\int_0^K (1-\operatorname{sn}^2 u)du + \\ &\frac{(h-f)^2-2b(1+m)(h+k^2)}{h(h+b)}\int_0^K \frac{1-\operatorname{sn}^2 u}{1+h\operatorname{sn}^2 u}du + \\ &\frac{(b+f)^2+2b(1+m)(b-k^2)}{b(h+b)}\int_0^K \frac{1-\operatorname{sn}^2 u}{1-b\operatorname{sn}^2 u}du\Bigg]\Bigg\} \end{aligned} \tag{A4}$$

where

$$f = \frac{m-a_o}{1+a_o}$$

$$h = \frac{\beta y+x}{\beta y-mx}\frac{m-a_o}{1+a_o}$$

$$b = \frac{m-a_o}{m(1+a_o)}$$

The solution to equation (A4) reduces to the final form

$$
\left.
\begin{aligned}
\Delta P_P''' = &-\left(\frac{qc_o}{2V}\right)\frac{16}{\pi R}\frac{s}{c_o}\left[\frac{1-2m^2}{\sqrt{2m(1+a_o)}}\sqrt{\frac{a_o(s-y)}{s}}\,K(k) - \right. \\
&\left. \frac{1}{\beta y}\frac{(2m^2x^2-\beta^2y^2)}{\sqrt{(mx+\beta y)(mx-\beta y)}}\,\psi_o + \frac{2m(\beta y+x)}{\beta y}\sqrt{\frac{s-y}{s}}\,\Phi_o\right] - \\
&\left(\frac{qc_o}{2V}\right)\frac{16}{\pi R}\frac{s}{c_o}\left\{(1-2m^2)\sqrt{\frac{a_o(s-y)}{s}}\,\frac{\sqrt{2m(1+a_o)}}{a_o(1-m^2)}\left[E(k) - k'^2\,K(k)\right] + \right. \\
&\frac{1+a_o}{a_o\beta y(\beta y+x)}\sqrt{\frac{a_o(s-y)}{s}}\,\frac{K(k)}{\sqrt{2m(1+a_o)}}\left[2m^2(x+\beta y)^2-(2m^2x^2-\beta^2y^2)\right] - \\
&\left. \frac{(2m^2x^2-\beta^2y^2)(\beta y-a_ox)}{a_o\beta y(x+\beta y)}\,\frac{1}{\sqrt{(mx+\beta y)(mx-\beta y)}}\,\psi_o - \frac{2m(\beta y+x)}{\beta y}\sqrt{\frac{s-y}{s}}\,\Phi_o\right\} \\
= &\Delta P_{P_1}''' + \Delta P_{P_2}'''
\end{aligned}
\right\} \quad \text{(A5)}
$$

where

$$\Phi_o = \left[E(k) - K(k)\right] F(\varphi,k') + K(k)\,E(\varphi,k')$$

$$\psi_o = \left[E(k) - K(k)\right] F(\psi,k') + K(k)\,E(\psi,k')$$

$$\varphi = \sin^{-1}\frac{1}{\sqrt{1-k^2}}\sqrt{\frac{1+m}{2}}$$

$$\psi = \sin^{-1}\frac{1}{\sqrt{1-k^2}}\sqrt{\frac{\beta y+mx}{\beta y+x}\times\frac{1+m}{2m}}$$

$$k = \sqrt{\frac{(m-a_o)(1-m)}{2m(1+a_o)}}$$

$$k' = \sqrt{1-k^2}$$

The first bracketed term in equation (A5) represents the part of the correction due to the conical component of the sectors of canceling pressure; the second bracketed term, that due to the quasi-conical component.

Of particular interest are the corrections for points on the Mach line originating at the tip of the leading edge. Along this line the terms a_o and k in equation (A5) reduce, respectively, to m and zero; and, as a result, the second integral in equation (A1), corresponding to the quasi-conical component of pressure, vanishes (since $a-a_o \rightarrow 0$). On the other hand, the conical component is finite along the Mach line and equation (A5) reduces to

$$\Delta P_{P_1}''' = -\left(\frac{qc_o}{2V}\right)\frac{8}{R}\frac{s}{c_o}\sqrt{\frac{1+m}{2m}}\left[\frac{1-2m^2}{1+m}\sqrt{\frac{m(s-y)}{s}} + \frac{2m(\beta y+x)}{\beta y}\sqrt{\frac{m(s-y)}{s}} - \frac{2m^2x^2-\beta^2y^2}{\beta y\sqrt{(x+\beta y)(mx-\beta y)}}\right] \tag{A6}$$

Thus equation (A6) expresses an abrupt drop in pressure along the Mach line.

APPENDIX B

BASIC VALUE OF DERIVATIVE FOR DAMPING IN PITCH

From equations (14) and (15) the basic value of the derivative for the damping in pitch may be written

$$C_{m_q} = \frac{-2}{\left(\frac{qc_o}{2V}\right)\left(\frac{1}{2}\rho V^2\right) Sc_o} \left(\int_{a_t}^{m} \bar{x}dZ + \int_{o}^{a_t} \bar{x}dZ\right) \tag{B1}$$

After substitution of the respective expressions for $\bar{x}$ and dZ, equation (B1) reduces to

$$C_{m_q} = -\left(\frac{b^2}{S}\right)\left(\frac{s}{c_o}\right)^2 \frac{\beta^2}{R}\left\{\left[\int_{a_t}^{m} \frac{2m^2-a^2}{a^4\sqrt{m^2-a^2}}da + \left(\frac{m_t c_o}{\beta s}\right)^4 \int_{o}^{a_t} \frac{2m^2-a^2}{(m_t-a)^4\sqrt{m^2-a^2}}da\right] - \right.$$

$$\frac{4}{3}\left(\frac{x_{c.g.}}{m_t c_o}\right)\left[\left(\frac{m_t c_o}{\beta s}\right)\int_{a_t}^{m} \frac{2m^2-a^2}{a^3\sqrt{m^2-a^2}}da + \right.$$

$$\left.\left.\left(\frac{m_t c_o}{\beta s}\right)^4 \int_{o}^{a_t} \frac{2m^2-a^2}{(m_t-a)^3\sqrt{m^2-a^2}}da\right]\right\} \tag{B2}$$

The final expressions for the two cases $m \neq m_t$ (in which $m_t > m$) and $m = m_t$, after integration of equation (B2), are as follows:

$m \neq m_t$

$$C_{m_q} = -\left(\frac{b^2}{S}\right)\left(\frac{s}{c_o}\right)^2 \frac{\beta^2}{R}\left\{\left[\frac{(2m^2+a_t^2)\sqrt{m^2-a_t^2}}{3m^2 a_t^3} + \right.\right.$$

$$\left(\frac{m_t c_o}{\beta s}\right)^4 \left\{\frac{\sqrt{m^2-a_t^2}}{3(m_t^2-m^2)(m_t-a_t)}\left[\frac{m_t^2-2m^2}{(m_t-a_t)^2} - \frac{m_t(m_t^2+4m^2)}{2(m_t^2-m^2)(m_t-a_t)} - \right.\right.$$

$$\left.\frac{2m^4+12m^2m_t^2+m_t^4}{2(m_t^2-m^2)^2}\right] + \frac{m^3(4m^4-12m_t^2m^2+23m_t^4)}{6m_t^3(m_t^2-m^2)^3} +$$

$$\frac{m_t m^2(2m^2+3m_t^2)}{2(m_t^2-m^2)^3\sqrt{m_t^2-m^2}}\left[\cos^{-1}\frac{m^2-m_t a_t}{m(m_t-a_t)}-\cos^{-1}\frac{m}{m_t}\right]\Bigg\}\Bigg]-$$

$$\frac{4}{3}\left(\frac{x_{c.g.}}{m_t c_o}\right)\Bigg\{\left(\frac{m_t c_o}{\beta s}\right)\frac{\sqrt{m^2-a_t^2}}{a_t^2}+$$

$$\left(\frac{m_t c_o}{\beta s}\right)^4\Bigg[\frac{(2m^4-5m_t^2m^2+m_t^3a_t+2m^2m_t a_t)\sqrt{m^2-a_t^2}}{2(m_t^2-m^2)^2(m_t-a_t)^2}-$$

$$\frac{m^3(2m^2-5m_t^2)}{2m_t^2(m_t^2-m^2)^2}+\frac{3m_t^2m^2}{2(m_t^2-m^2)^2\sqrt{m_t^2-m^2}}\left(\cos^{-1}\frac{m^2-m_t a_t}{m(m_t-a_t)}-\right.$$

$$\left.\cos^{-1}\frac{m}{m_t}\right)\Bigg]\Bigg\}\Bigg\} \tag{B3}$$

$m = m_t$

$$C_{m_q}=-\left(\frac{b^2}{S}\right)\left(\frac{s}{c_o}\right)^2\frac{\beta^2}{R}\Bigg[\Bigg\{\frac{(2m^2+a_t^2)\sqrt{m^2-a_t^2}}{3m^2a_t^3}+$$

$$\left(\frac{mc_o}{\beta s}\right)^4\frac{1}{105m^2(m-a_t)^4}\left[(64m^3-46m^2a_t-4ma_t^2+a_t^3)\sqrt{m^2-a_t^2}-64(m-a_t)^4\right]\Bigg\}-$$

$$\frac{4}{3}\left(\frac{x_{c.g.}}{mc_o}\right)\Bigg\{\left(\frac{mc_o}{\beta s}\right)\frac{\sqrt{m^2-a_t^2}}{a_t^2}+$$

$$\left(\frac{mc_o}{\beta s}\right)^4\frac{1}{5m(m-a_t)^3}\left[(4m^2-2a_tm-a_t^2)\sqrt{m^2-a_t^2}-4\,(m-a_t)^3\right]\Bigg\}\Bigg] \tag{B4}$$

If the term $x_{c.g.}$ is zero in the above equations, then the angle-of-attack correction given by equation (2) is not required.

APPENDIX C

CORRECTIONS FOR DAMPING DUE TO OBLIQUE CANCELING SECTORS IN WAKE

The corrections for the damping derivative due to cancellation of the basic pressure in the wake by means of the oblique sectors are given separately for the two cases $m_a > 1$ (i.e., Mach lines from trailing edge intersect tip) and $m_a < 1$ (i.e., Mach lines from trailing edge intersect leading edge).

Case I ($m_a > 1$)

The correction for this case is given by equation (18), which, upon substituting the expressions for $\bar{x}''$ and dS/dt, becomes

$$\Delta C_{m_q}'' = \Delta C_{m_{q_1}}'' + \Delta C_{m_{q_2}}''$$

$$= \frac{2}{\left(\frac{qc_o}{2V}\right) Sc_o}\left\{\frac{\beta m_t^2 s^2}{2\pi a_t^2}\int_o^{a_t}\left(\frac{a_t-a}{m_t-a}\right)^2\left(\frac{dP_{P_A}}{da}\right)\int_{m_t}^1\left[x_A-x_{c.g.}+\right.\right.$$

$$\left.\frac{2}{3}\frac{\beta(s-y_A)}{t}\right]\frac{1}{t^2}\cos^{-1}\chi''dt\,da+\frac{2}{3}\frac{\beta^2 m_t^2 s^2}{2\pi a_t^2}\int_o^{a_t}\frac{(a_t-a)^2}{(m_t-a)^3}\frac{s-y_A}{x_A}\left(\frac{dP_{P_A}}{da}\right)\times$$

$$\left.\int_{m_t}^1\left[x_A-x_{c.g.}+\frac{3}{4}\frac{\beta(s-y_A)}{t}\right]\frac{m_t-t}{t^3}\left(\cos^{-1}\chi''-\frac{t-a}{t-m_t}\frac{1-m_t}{1-a}\sqrt{1-\chi''^2}\right)dt\,da\right\} \tag{C1}$$

Integrating equation (C1) with respect to t gives

$$\Delta C_{m_q}'' = \frac{\left(\frac{b^2}{S}\right)}{\left(\frac{qc_o}{2V}\right)}\frac{\beta}{4}\left(\frac{m_t}{a_t}\right)^2\int_o^{a_t}\frac{dP_{P_A}}{da}\frac{(a_t-a)^2}{a(m_t-a)^2}\left\{-\left(\frac{x_A-x_{c.g.}}{c_o}\right)\left(\frac{m_t-a}{m_t}\right)-\right.$$

$$\frac{\beta}{3}\left(\frac{s-y_A}{c_o}\right)\left(\frac{m_t^2-a^2}{am_t^2}\right)+\left[\left(\frac{x_A-x_{c.g.}}{c_o}\right)+\right.$$

$$\frac{\beta}{3}\left(\frac{s-y_A}{c_o}\right)\left(\frac{1}{a}+\frac{1+m_t}{2m_t}\right)\Bigg]\sqrt{\frac{(m_t-a)(1-a)}{m_t}}\Bigg\}\,da\,+$$

$$\frac{\left(\frac{b^2}{S}\right)}{\left(\frac{qc_o}{2V}\right)}\frac{\beta^2}{6}\left(\frac{m_t}{a_t}\right)^2\int_0^{a_t}\frac{dP_{P_A}}{da}\left(\frac{s-y_A}{x_A}\right)\left(\frac{a_t-a}{m_t-a}\right)^2\Bigg\{\left(\frac{x_A-x_{c.g.}}{c_o}\right)\Bigg[-\frac{m_t-a}{2a^2m_t}+$$

$$\frac{2m_t-a(1+m_t)}{4a^2m_t(1-a)}\sqrt{\frac{(m_t-a)(1-a)}{m_t}}\Bigg]+\frac{\beta}{8}\left(\frac{s-y_A}{c_o}\right)\Bigg[-\frac{(m_t-a)(2m_t+a)}{a^3m_t^2}+$$

$$\frac{8m_t^2-a^2(3+m_t^2)-4am_t^2}{4a^3m_t^2(1-a)}\sqrt{\frac{(m_t-a)(1-a)}{m_t}}\Bigg]\Bigg\}\,da \qquad \text{(C2)}$$

where

$$\frac{dP_{P_A}}{da}=\left(\frac{qc_o}{2V}\right)\frac{8m_t}{\beta R}\left[\frac{2m^4-3m^2a^2+a^3m_t}{(m_t-a)^2(m^2-a^2)^{3/2}}\right] \qquad \text{(C3)}$$

$$x_A=\frac{m_tc_o}{m_t-a}$$

$$y_A=\frac{m_tc_oa}{\beta(m_t-a)}$$

Equation (C2) should be integrated graphically. Since the integrand of this equation is indeterminate for $a = 0$, the following expression should be used for the point $a = 0$:

$$d\left(\Delta C_{m_q}''\right)_{a=0}=\left(\frac{b^2}{S}\right)\frac{m(1-m_t)}{6Rm_t^3}\left[12m_t\left(1-\frac{x_{c.g.}}{c_o}\right)+\frac{\beta s}{c_o}\left(5+3m_t\right)\right]+$$

$$\left(\frac{b^2}{S}\right)\frac{\beta sm}{24Rc_om_t^4}\Bigg\{\left(\frac{c_o-x_{c.g.}}{c_o}\right)4m_t(1-m_t)^2+\frac{\beta s}{c_o}\Bigg[6(1+m_t)(1-m_t)^2-$$

$$3(1-m_t)(5+3m_t)+12m_t(1+m_t)-5(1+m_t)^3+16\Bigg]\Bigg\} \qquad \text{(C4)}$$

Case II $(m_a < 1)$

The correction for this case is composed of two parts, one for the range $a_l \leq a \leq a_t$ and the other for the range $0 \leq a \leq a_l$. Thus,

$$\Delta C_{m_q}'' = \left(\Delta C_{m_q}''\right)_{a > a_l} + \left(\Delta C_{m_q}''\right)_{a < a_l}$$

The first part for $a > a_l$ is given by equation (C2). The second part has to be evaluated separately over the two ranges $m_t \leq t \leq m_a$ and $m_a \leq t \leq 1$, that is,

$$\left(\Delta C_{m_q}''\right)_{a < a_l} = \frac{1}{\left(\frac{qc_o}{2V}\right)\left(\frac{1}{2}\rho V^2\right)Sc_o}\left(\int_o^{a_l}\int_{m_t}^{m_a} dM'' + \int_o^{a_l}\int_{m_a}^{1} dM''\right)$$

If only the conical component of the canceling pressure is considered, the correction for the range $0 \leq a \leq a_l$ becomes

$$\left(\Delta C_{m_q}''\right)_{a < a_l} = \frac{2}{\left(\frac{qc_o}{2V}\right)Sc_o}\left\{\int_o^{a_l}\int_{m_t}^{m_a}\left[\left(x_A - x_{c.g.}\right) + \frac{2}{3}\,\frac{\beta(s-y_A)}{t}\right]\left(\frac{dP_{P_A}}{da}\right)\frac{1}{\pi}\cos^{-1}\chi''\frac{\beta m_t^2 s^2}{2a_t^2 t^2}\left(\frac{a_t - a}{m_t - a}\right)^2 dt\,da + \int_o^{a_l}\int_{m_a}^{1} x_A\left(1 - \frac{x_{c.g.}}{x_A} + \frac{2}{3}\,\frac{m-a}{t-m}\right)\left(\frac{dP_{P_A}}{da}\right)\frac{1}{\pi}\cos^{-1}\chi''\frac{x_A^2}{2\beta}\left(\frac{m-a}{t-m}\right)^2 dt\,da\right\} \tag{C5}$$

When integrated with respect to t, this expression for a tapered wing $(m \neq m_t)$ reduces to

$$
\begin{aligned}
\left(\Delta C_{m_q}''\right)_{a<a_l} = \frac{\left(\frac{b^2}{S}\right)}{\left(\frac{qc_o}{2V}\right)} \int_0^{a_l} \left(\frac{dP_{P_A}}{da}\right) \Bigg[& \frac{\beta}{4}\left(\frac{m_t}{a_t}\right)^2 \left(\frac{a_t-a}{m_t-a}\right)^2 \Bigg\{ \left(\frac{x_A-x_{c.g.}}{c_o}\right) \Bigg[\frac{m_a-a}{m_a a\pi} \cos^{-1} \chi_{m_a}'' - \\
& \frac{m_t-a}{m_t a} + \frac{1}{\pi a}\sqrt{\frac{(m_t-a)(1-a)}{m_t}} \cos^{-1} \frac{2m_t-m_a(1+m_t)}{m_a(1-m_t)} \Bigg] + \frac{2}{3}\frac{\beta(s-y_A)}{c_o} \Bigg[\frac{m_a^2-a^2}{2\pi m_a^2 a^2} \cos^{-1} \chi_{m_a}'' - \frac{m_t^2-a^2}{2m_t^2 a^2} + \\
& \frac{2m_t+a(1+m_t)}{4\pi a^2 m_t}\sqrt{\frac{(m_t-a)(1-a)}{m_t}} \cos^{-1} \frac{2m_t-m_a(1+m_t)}{m_a(1-m_t)} + \frac{\sqrt{(1-a)(1-m_a)(m_t-a)(m_a-m_t)}}{2\pi a m_t m_a} \Bigg] \Bigg\} + \\
& \frac{(m-a)^2}{3\pi\beta}\left(\frac{x_A^e}{b^2 c_o}\right) \Bigg\{ \frac{m_a-a}{(m_a-m)(m-a)} \Bigg[\frac{3(x_A-x_{c.g.})}{x_A} + \frac{(m-a)^2}{(m_a-a)(m_a-m)} - \frac{m_a-m}{m_a-a} \Bigg] \cos^{-1} \chi_{m_a}'' - \\
& \frac{1}{m-a}\sqrt{\frac{(1-a)(m_t-a)}{(1-m)(m_t-m)}} \Bigg[\frac{2x_A-3x_{c.g.}}{x_A} + \frac{(m-a)(1+m_t-2m)}{2(1-m)(m_t-m)} \Bigg] \cos^{-1} \chi_{m_m}'' + \\
& \frac{\sqrt{(1-a)(m_t-a)(1-m_a)(m_a-m_t)}}{(m_a-m)(1-m)(m_t-m)} \Bigg\} \Bigg] da
\end{aligned}
\tag{C6}
$$

where

$$\chi_{m_a}'' = \frac{(1-a)(m_a-m_t) - (m_t-a)(1-m_a)}{(1-m_t)(m_a-a)}$$

$$\chi_{m_m}'' = \frac{(1-m)(m_a-m_t) - (m_t-m)(1-m_a)}{(1-m_t)(m_a-m)}$$

For an untapered wing $(m=m_t)$, the correction is

$$\left(\Delta C_{m_q}''\right)_{a<a_l} = \frac{\left(\frac{b^2}{S}\right)}{\left(\frac{qc_o}{2V}\right)} \int_0^{a_l} \frac{dP_{P_A}}{da} \left[\frac{\beta}{4}\left(\frac{m}{a_t}\right)^2 \left(\frac{a_t-a}{m-a}\right)^2 \left\{ \left(\frac{x_A-x_{c.g.}}{c_o}\right) \left[\frac{m_a-a}{m_a a\pi} \cos^{-1}\chi_{m_a}'' - \frac{m-a}{ma} + \right.\right.\right.$$

$$\left. \frac{1}{\pi a}\sqrt{\frac{(m-a)(1-a)}{m}} \cos^{-1}\frac{2m-m_a(1+m)}{m_a(1-m)} \right] + \frac{2}{3}\frac{\beta(s-y_A)}{c_o}\left[\frac{m_a^2-a^2}{2\pi m_a^2 a^2}\cos^{-1}\chi_{m_a}'' - \frac{m^2-a^2}{2m^2a^2} + \right.$$

$$\left.\left. \frac{2m+a(1+m)}{4\pi a^2 m}\sqrt{\frac{(m-a)(1-a)}{m}}\cos^{-1}\frac{2m-m_a(1+m)}{m_a(1-m)} + \frac{\sqrt{(1-a)(1-m_a)(m-a)(m_a-m)}}{2\pi a m\, m_a} \right]\right\} +$$

$$\frac{(m-a)^2}{3\pi\beta}\left(\frac{x_A^3}{b^2c_o}\right)\left\{ \frac{m_a-a}{(m_a-m)(m-a)}\left[\frac{3(x_A-x_{c.g.})}{x_A} + \frac{2m-a-m_a}{m_a-m}\right]\cos^{-1}\chi_{m_a}'' - \right.$$

$$\left.\left. \left[6 + \frac{m-a}{m_a-m} + \frac{2(m-a)}{1-m}\right] \frac{2}{3(1-m)}\sqrt{\frac{(1-a)(1-m_a)}{(m-a)(m_a-m)}} \right\}\right] da \qquad \text{(C7)}$$

APPENDIX D

DAMPING CORRECTION DUE TO CANCELLATION OF BASIC PRESSURE OUTBOARD OF TIPS

The correction for the damping derivative from equation (19), after substituting the expressions for $\overline{x}_1'''$, $\overline{x}_2'''$, and $\frac{dS}{dt}$ and integrating with respect to t, becomes

$$\Delta C_{m_q}''' = \Delta C_{m_{q_1}}''' + \Delta C_{m_{q_2}}'''$$

$$= \frac{\left(\frac{b^2}{S}\right)}{\left(\frac{qc_o}{2V}\right)} \frac{\beta^2 m_t^2}{4} \frac{s}{c_o} \int_{a_t}^{m} \left(\frac{dP_{P_A}}{da}\right) \left(\frac{1}{a} - \frac{1}{a_t}\right)^2 \left[\left(\frac{1}{a} - \frac{x_{c.g.}}{\beta s}\right)\left\{\frac{1}{m_t} + \right.\right.$$

$$\left. \frac{1}{m_t - a}\left[\sqrt{\frac{a(1+a)}{m_t(1+m_t)}} - 1\right]\right\} - \frac{1}{3} m_t \left(\frac{1}{a} - \frac{1}{a_t}\right) \left\{\frac{1}{m_t} - \right.$$

$$\left.\left. \frac{1}{(m_t - a)^2} + \frac{1}{m_t - a}\sqrt{\frac{a(1+a)}{m_t(1+m_t)}} \left[\frac{1+2m_t}{2m_t(1+m_t)} + \frac{1}{m_t - a}\right]\right\}\right] da +$$

$$\frac{\left(\frac{b^2}{S}\right)}{\left(\frac{qc_o}{2V}\right)} \frac{\beta^2 m_t^3}{6} \frac{s}{c_o} \int_{a_t}^{m} \left(\frac{dP_{P_A}}{da}\right) \left(\frac{1}{a} - \frac{1}{a_t}\right)^3 \left[\left(\frac{1}{a} - \frac{x_{c.g.}}{\beta s}\right)\left\{\frac{1}{2m_t} + \right.\right.$$

$$\frac{m_t - 2a}{2(m_t - a)^2}\left[\sqrt{\frac{a(1+a)}{m_t(1+m_t)}} - 1\right] - \frac{1+2m_t}{4(1+m_t)(m_t - a)}\sqrt{\frac{a(1+a)}{m_t(1+m_t)}} -$$

$$\left. \frac{1}{4m_t(1+m_t)(1+a)}\sqrt{\frac{a(1+a)}{m_t(1+m_t)}}\right\} + \frac{3}{4} m_t \left(\frac{1}{a} - \frac{1}{a_t}\right)\left\{-\frac{1}{6m_t^2} - \frac{3a - m_t}{6(m_t - a)^3} + \right.$$

$$\sqrt{\frac{a(1+a)}{m_t(1+m_t)}}\left[-\frac{1+2m_t}{8m_t(m_t - a)(1+m_t)^2} + \frac{m_t + a + 1}{6(m_t - a)^2(1+m_t)} + \frac{3a - m_t}{6(m_t - a)^3}\right] +$$

$$\left.\left.\frac{1+2m_t}{4m_t^2(1+m_t)^2(1+a)}\sqrt{\frac{a(1+a)}{m_t(1+m_t)}}\right\}\right] da \tag{D1}$$

$$= \frac{\left(\frac{b^2}{S}\right)}{\left(\frac{qc_o}{2V}\right)} \frac{\beta^2 m_t^2}{4} \frac{s}{c_o} \left[\int_{a_t}^{m}\left(\frac{dP_{P_A}}{da}\right) H(a)da + \right.$$

$$\left. \frac{2m_t}{3}\int_{a_t}^{m}\left(\frac{dP_{P_A}}{da}\right) J(a)\, da\right] \tag{D2}$$

where

$$H(a) = \left(\frac{1}{a}-\frac{1}{a_t}\right)^2\left\{\left(\frac{1}{a}-\frac{x_{c.g.}}{\beta s}\right)\left[\frac{1}{m_t}+g(a)\right]-\frac{m_t}{3}\left(\frac{1}{a}-\frac{1}{a_t}\right)\left[\frac{1}{m_t}+p(a)\right]\right\}$$

$$J(a) = \frac{1}{2}\left(\frac{1}{a}-\frac{1}{a_t}\right)^3\left\{\left(\frac{1}{a}-\frac{x_{c.g.}}{\beta s}\right)\left[\frac{1}{m_t}+h(a)-\frac{1}{2m_t(1+m_t)(1+a)}\sqrt{\frac{a(1+a)}{m_t(1+m_t)}}\right]+\right.$$

$$\left.\frac{3m_t}{4}\left(\frac{1}{a}-\frac{1}{a_t}\right)\left[-\frac{1}{3m_t^2}+j(a)+\frac{1+2m_t}{2m_t^2(1+m_t)^2(1+a)}\sqrt{\frac{a(1+a)}{m_t(1+m_t)}}\right]\right\}$$

and

$$g(a) = \frac{1}{m_t-a}\left[\sqrt{\frac{a(1+a)}{m_t(1+m_t)}}-1\right]$$

$$p(a) = \frac{1}{m_t-a}\left[g(a)+\frac{1+2m_t}{2m_t(1+m_t)}\sqrt{\frac{a(1+a)}{m_t(1+m_t)}}\right]$$

$$h(a) = \frac{1}{m_t-a}\left[(m_t-2a)\,g(a)-\frac{1+2m_t}{2(1+m_t)}\sqrt{\frac{a(1+a)}{m_t(1+m_t)}}\right]$$

$$j(a) = \frac{1}{m_t-a}\left[l(a)-\frac{1+2m_t}{4m_t(1+m_t)^2}\sqrt{\frac{a(1+a)}{m_t(1+m_t)}}\right]$$

$$l(a) = \frac{1}{3(m_t-a)}\left[(3a-m_t)\,g(a)+\frac{m_t+a+1}{1+m_t}\sqrt{\frac{a(1+a)}{m_t(1+m_t)}}\right]$$

Since the term $\frac{dP_{P_A}}{da}$ becomes infinite as a approaches m, it is necessary to transform equation (D2), according to the procedure outlined in reference 7, to the following more suitable form for numerical integration, where the two cases $m \neq m_t$ $(m_t > m)$ and $m = m_t$ require separate solutions as noted:

$$\Delta C_{m_q}''' = \left(\frac{b^2}{S}\right) \frac{2\beta^2 m_t^2}{R'} \frac{s^2}{c_o^2} \left[\left\{ H'(m) \left[2m \log\left(\frac{m+\sqrt{m^2-a_t^2}}{a_t}\right) - \sqrt{m^2-a_t^2}\right] + \int_{a_t}^{m} \frac{H'(a) - H'(m)}{\sqrt{m^2-a^2}} \left(\frac{2m^2-a^2}{a}\right) da \right\} + \frac{2m_t}{3}\left\{ J'(m) \left[2m \log\left(\frac{m+\sqrt{m^2-a_t^2}}{a_t}\right) - \sqrt{m^2-a_t^2}\right] + \int_{a_t}^{m} \frac{J'(a) - J'(m)}{\sqrt{m^2-a^2}} \left(\frac{2m^2-a^2}{a}\right) da \right\}\right] \tag{D3}$$

Case I, $m \neq m_t$

$$H'(a) = \left(\frac{1}{a} - \frac{1}{a_t}\right)^2 \left\{-\frac{1}{a^2}\left[\frac{1}{m_t} + g(a)\right] + \left(\frac{1}{a} - \frac{x_{c.g.}}{\beta s}\right) g'(a) - \frac{m_t}{3}\left(\frac{1}{a} - \frac{1}{a_t}\right) p'(a) + \frac{m_t}{a^2}\left[\frac{1}{m_t} + p(a)\right]\right\} - \frac{2}{a^2}\left(\frac{1}{a} - \frac{1}{a_t}\right)\left[\frac{1}{m_t} + g(a)\right]\left(\frac{1}{a} - \frac{x_{c.g.}}{\beta s}\right)$$

$$J'(a) = \frac{1}{2}\left(\frac{1}{a} - \frac{1}{a_t}\right)^3 \left\{\left(\frac{1}{a} - \frac{x_{c.g.}}{\beta s}\right)\left[h'(a) - \frac{1}{4am_t(1+m_t)(1+a)^2}\sqrt{\frac{a(1+a)}{m_t(1+m_t)}}\right]\right\} - \frac{1}{2a^2}\left(\frac{1}{a} - \frac{1}{a_t}\right)^3 \left[h(a) + 3\, m_t j(a) + \frac{2+5m_t}{2m_t(1+m_t)^2(1+a)}\sqrt{\frac{a(1+a)}{m_t(1-m_t)}}\right] - \frac{3}{2a^2}\left(\frac{1}{a} - \frac{1}{a_t}\right)^2 \left\{\left(\frac{1}{a} - \frac{x_{c.g.}}{\beta s}\right)\left[\frac{1}{m_t} + h(a) - \frac{1}{2m_t(1+m_t)(1+a)}\sqrt{\frac{a(1+a)}{m_t(1+m_t)}}\right]\right\} + \frac{3m_t}{8}\left(\frac{1}{a} - \frac{1}{a_t}\right)^4 \left[j'(a) + \right.$$

$$\frac{1+2m_t}{4am_t^2(1+m_t)^2(1+a)^2}\sqrt{\frac{a(1+a)}{m_t(1+m_t)}}\Bigg]$$

in which $g(a)$, $p(a)$, $h(a)$, $j(a)$, and $l(a)$ have been previously defined, and

$$g'(a) = \frac{1}{m_t-a}\left[g(a) + \frac{2a+1}{2\sqrt{am_t(1+a)(1+m_t)}}\right]$$

$$p'(a) = \frac{1}{m_t-a}\left[p(a) + g'(a) + \frac{(1+2m_t)(1+2a)}{4m_t(1+m_t)\sqrt{am_t(1+m_t)(1+a)}}\right]$$

$$h'(a) = \frac{1}{m_t-a}\left[(m_t-2a)\,g'(a) - 2g(a) + h(a) - \frac{(1+2m_t)(1+2a)}{4(1+m_t)\sqrt{am_t(1+a)(1+m_t)}}\right]$$

$$j'(a) = \frac{1}{m_t-a}\left[j(a) + l'(a) - \frac{(1+2m_t)(1+2a)}{8m_t(1+m_t)^2\sqrt{am_t(1+a)(1+m_t)}}\right]$$

$$l'(a) = \frac{1}{3(m_t-a)}\left[3l(a) + 3g(a) + (3a-m_t)g'(a) + \frac{1}{1+m_t}\sqrt{\frac{a(1+a)}{m_t(1+m_t)}} + \right.$$

$$\left.\frac{(1+2a)(m_t+a+1)}{2(1+m_t)\sqrt{am_t(1+m_t)(1+a)}}\right]$$

Case II, $m = m_t$

$$H'(m) = \left(\frac{1}{m} - \frac{1}{a_t}\right)^2\left\{-\frac{1}{m^2}\left[\frac{1}{m} + g(m)\right] + \left(\frac{1}{m} - \frac{x_{c.g.}}{\beta s}\right)g'(m) - \frac{m}{3}\left(\frac{1}{m} - \frac{1}{a_t}\right)p'(m) + \right.$$

$$\left.\frac{1}{m}\left[\frac{1}{m} + p(m)\right]\right\} - \frac{2}{m^2}\left(\frac{1}{m} - \frac{1}{a_t}\right)\left[\frac{1}{m} + g(m)\right]\left(\frac{1}{m} - \frac{x_{c.g.}}{\beta s}\right)$$

$$J'(m) = \frac{1}{2}\left(\frac{1}{m} - \frac{1}{a_t}\right)^3 \left\{\left(\frac{1}{m} - \frac{x_{c.g.}}{\beta s}\right)\left[h'(m) - \frac{1}{4m^2(1+m)^3}\right]\right\} -$$

$$\frac{1}{2m^2}\left(\frac{1}{m} - \frac{1}{a_t}\right)^3 \left[h(m) + 3mj(m) + \frac{2+5m}{2m(1+m)^3}\right] -$$

$$\frac{3}{2m^2}\left(\frac{1}{m} - \frac{1}{a_t}\right)^2 \left\{\left(\frac{1}{m} - \frac{x_{c.g.}}{\beta s}\right)\left[\frac{1}{m} + h(m) - \frac{1}{2m(1+m)^2}\right]\right\} +$$

$$\frac{3m}{8}\left(\frac{1}{m} - \frac{1}{a_t}\right)^4 \left[j'(m) + \frac{1+2m}{4m^3(1+m)^4}\right]$$

where

$$g(m) = -\frac{2m+1}{2m(1+m)} \qquad g'(m) = \frac{1}{8m^2(1+m)^2}$$

$$p(m) = -\frac{3+8m+8m^2}{8m^2(1+m)^2} \qquad p'(m) = \frac{1+2m}{8m^3(1+m)^3}$$

$$h(m) = -\frac{1}{m} + \frac{3}{8m(1+m)^2} \qquad h'(m) = \frac{1}{8m^2(1+m)^3}$$

$$j(m) = \frac{4+15m+24m^2+8m^3}{24m^2(1+m)^3} \qquad j'(m) = -\frac{3+8m}{64m^3(1+m)^4}$$

$$l(m) = \frac{2m+1}{4m(1+m)^2} \qquad l'(m) = -\frac{1+3m+12m^2+8m^3}{24m^2(1+m)^3}$$

REFERENCES

1. Ribner, Herbert S., and Malvestuto, Frank S.: Stability Derivatives of Triangular Wings at Supersonic Speeds. NACA TN 1572, 1948.

2. Harmon, Sidney M.: Stability Derivatives of Thin Rectangular Wings at Supersonic Speeds. NACA TN 1706, 1948.

3. Moeckel, W. E., and Evvard, J. C.: Load Distribution Due to Steady Roll and Pitch for Thin Wings at Supersonic Speeds. NACA TN 1689, 1948.

4. Brown, Clinton E., and Adams, Mac C.: Damping in Pitch and Roll of Triangular Wings at Supersonic Speeds. NACA Rep. 892, 1948.

5. Malvestuto, Jr., Frank S., and Margolis, Kenneth: Theoretical Stability Derivatives of Thin Sweptback Wings Tapered to a Point with Sweptback or Sweptforward Trailing Edges for a Limited Range of Supersonic Speeds. NACA TN 1761, 1949.

6. Ribner, Herbert S.: On the Effect of Subsonic Trailing Edges on Damping in Roll and Pitch of Thin Swept Back Wings in a Supersonic Stream. NACA TN 2146, 1950.

7. Cohen, Doris: The Theoretical Lift of Flat Swept-Back Wings at Supersonic Speeds. NACA TN 1555, 1948.

8. Cohen, Doris: Theoretical Loading at Supersonic Speeds of Flat Swept-Back Wings with Interacting Trailing and Leading Edges. NACA TN 1991, 1949.

9. Walker, Harold J., and Ballantyne, Mary B.: Pressure Distribution and Damping in Steady Roll at Supersonic Mach Numbers of Flat Swept-Back Wings With Subsonic Edges. NACA TN 2047, 1949.

10. Ribner, Herbert S.: Some Conical and Quasi-Conical Flows in Linearized Supersonic-Wing Theory. NACA TN 2147, 1950.

TABLE I.– CALCULATED DAMPING DERIVATIVE FOR WING SHOWN IN FIGURE 1

Quantity	Magnitude	Percent of total
C_{m_q} (uncorrected)	–12.174	179.3
$\Delta C_{m_{q_1}}''$ (T.E., conical)	1.063	–15.7
$\Delta C_{m_{q_2}}''$ (T.E., quasi conical)	.046	–.7
$\Delta C_{m_{q_1}}'$ (symmetrical, conical)	1.883	–27.6
$\Delta C_{m_{q_2}}'$ (symmetrical, quasi conical)	.129	–1.9
$\Delta C_{m_{q_1}}'''$ (tip, conical)	2.431	–35.8
$\Delta C_{m_{q_2}}'''$ (tip, quasi conical)	.231	–3.4
Estimated secondary corrections	–.400	5.9
C_{m_q} (corrected)	–6.791	100.0

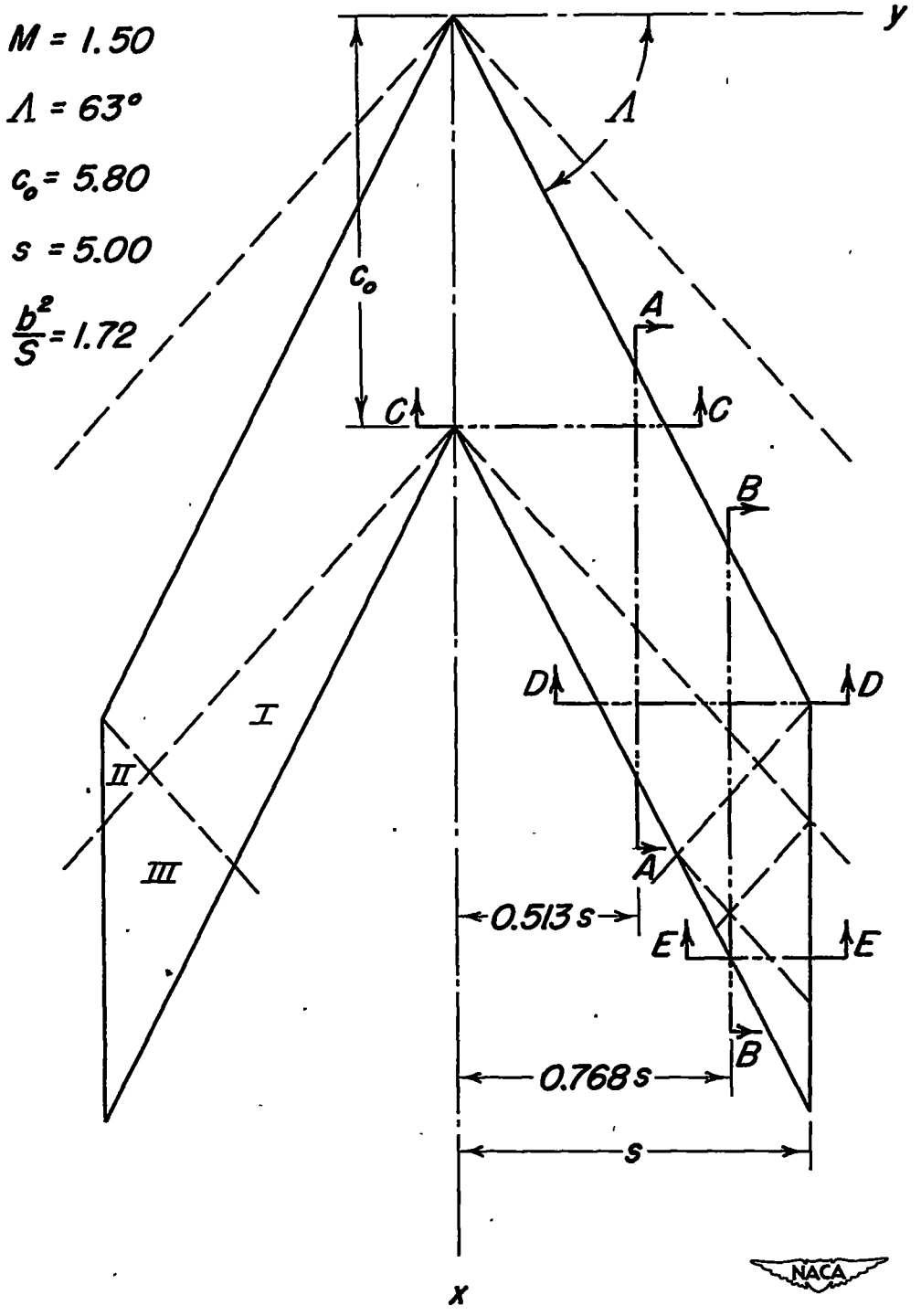

(a) Illustrative wing plan form.

Figure 1.– Wing plan form, coordinate system, and principal symbols used in analysis.

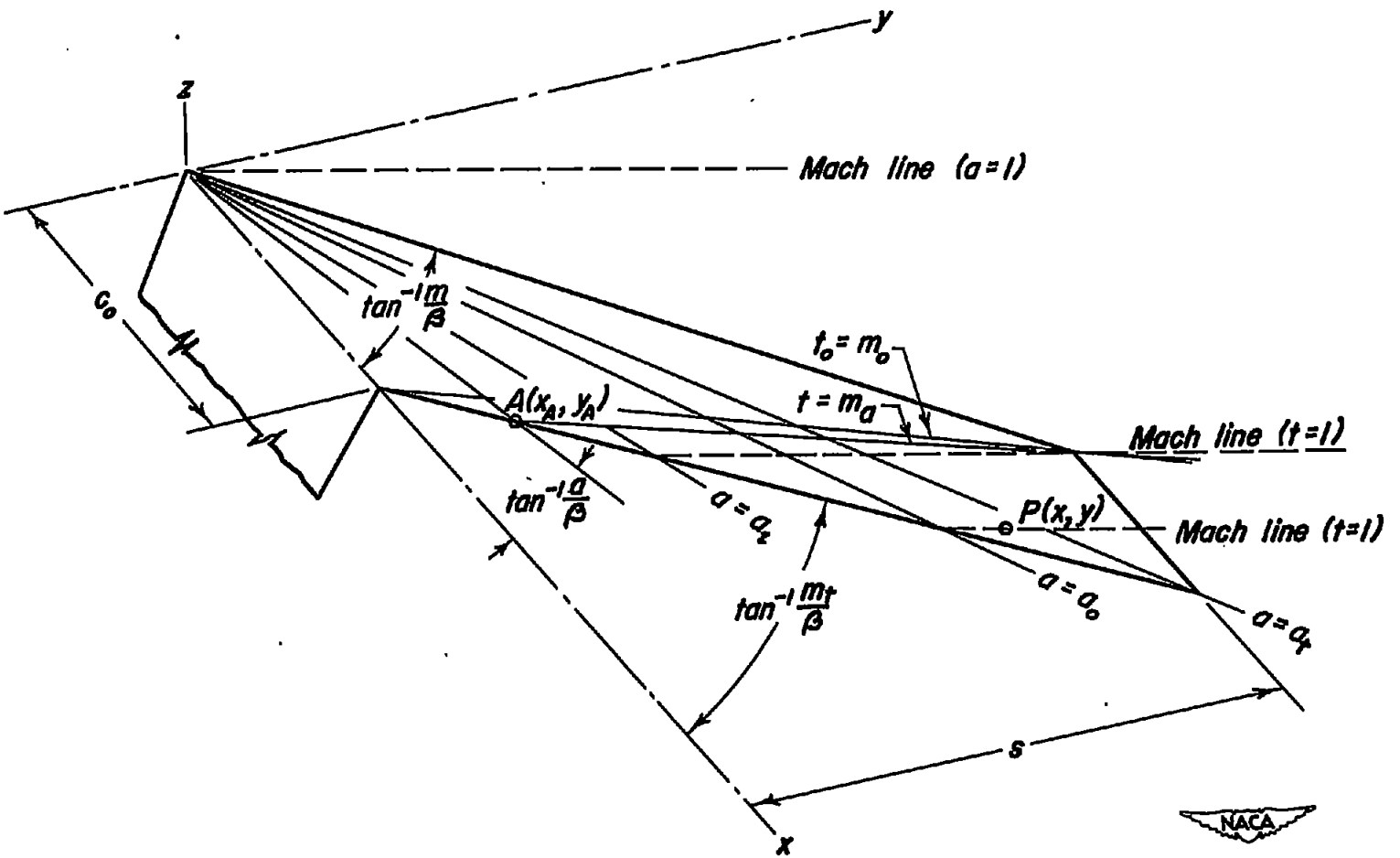

(b) Coordinate system and principal symbols

Figure 1.– Concluded.

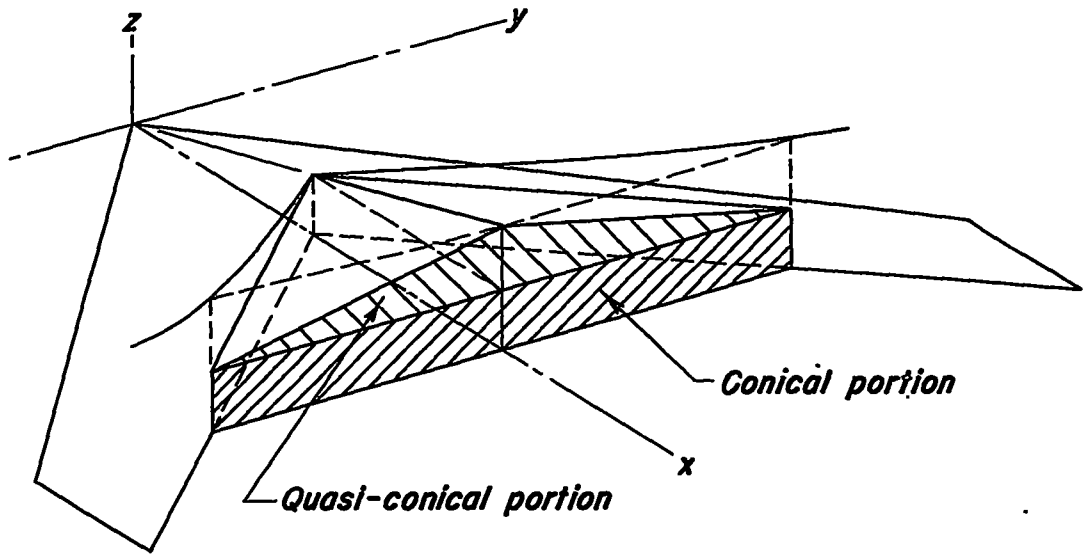

(a) Pressure field canceled by symmetrical sector.

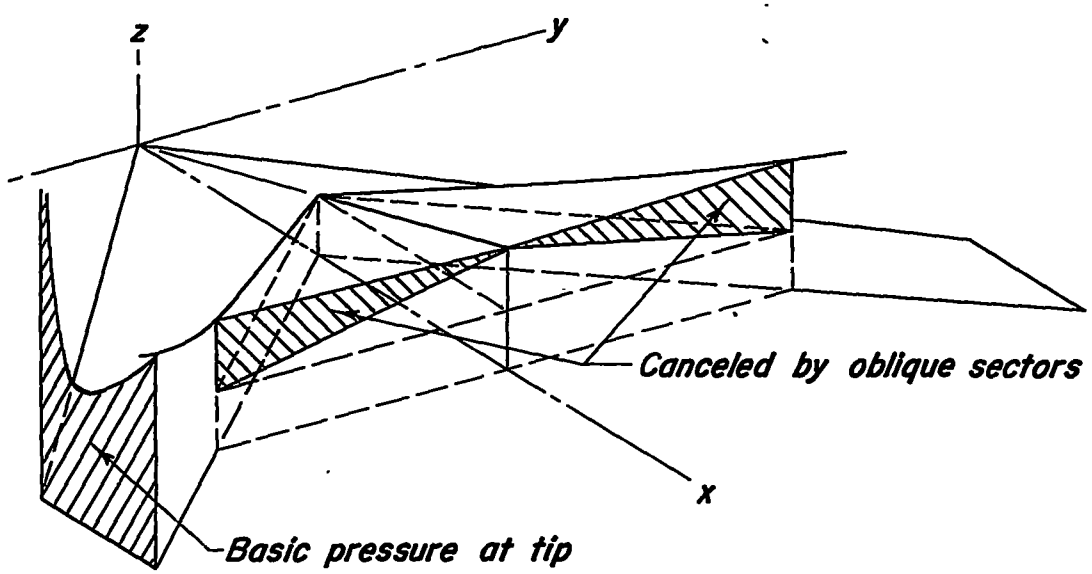

(b) Pressure field canceled by oblique sectors.

Figure 2.– Field of pressure in the wake to be canceled.

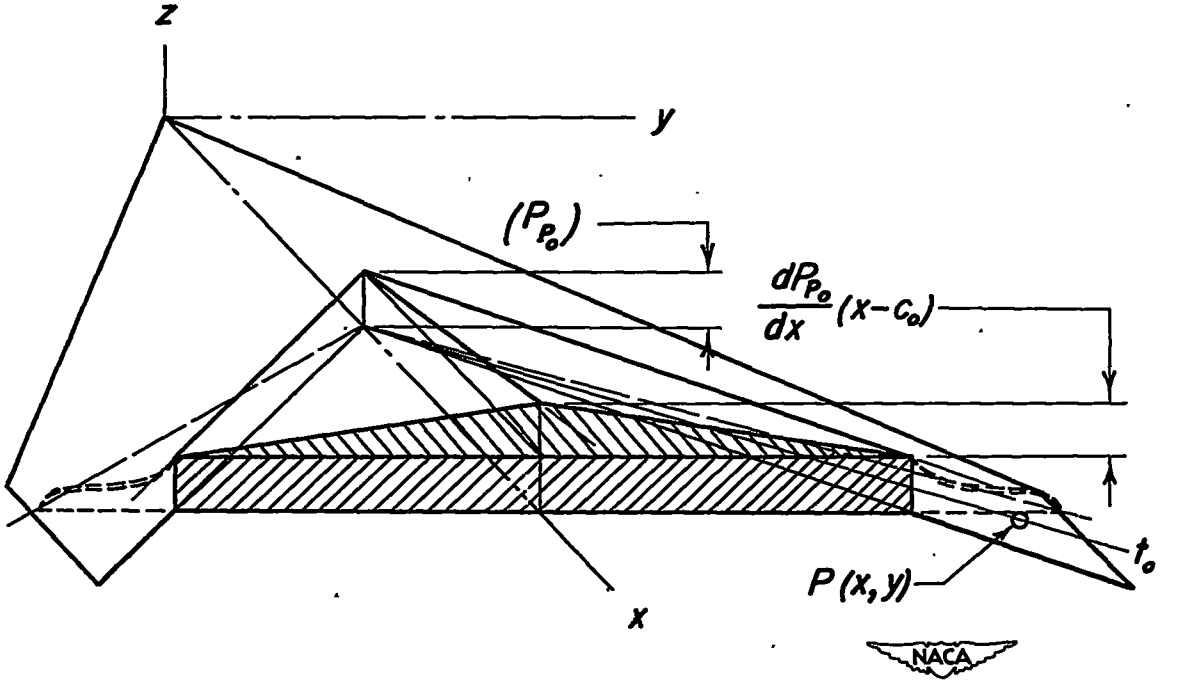

Figure 3.– Symmetrical pressure canceling sector in the wake.

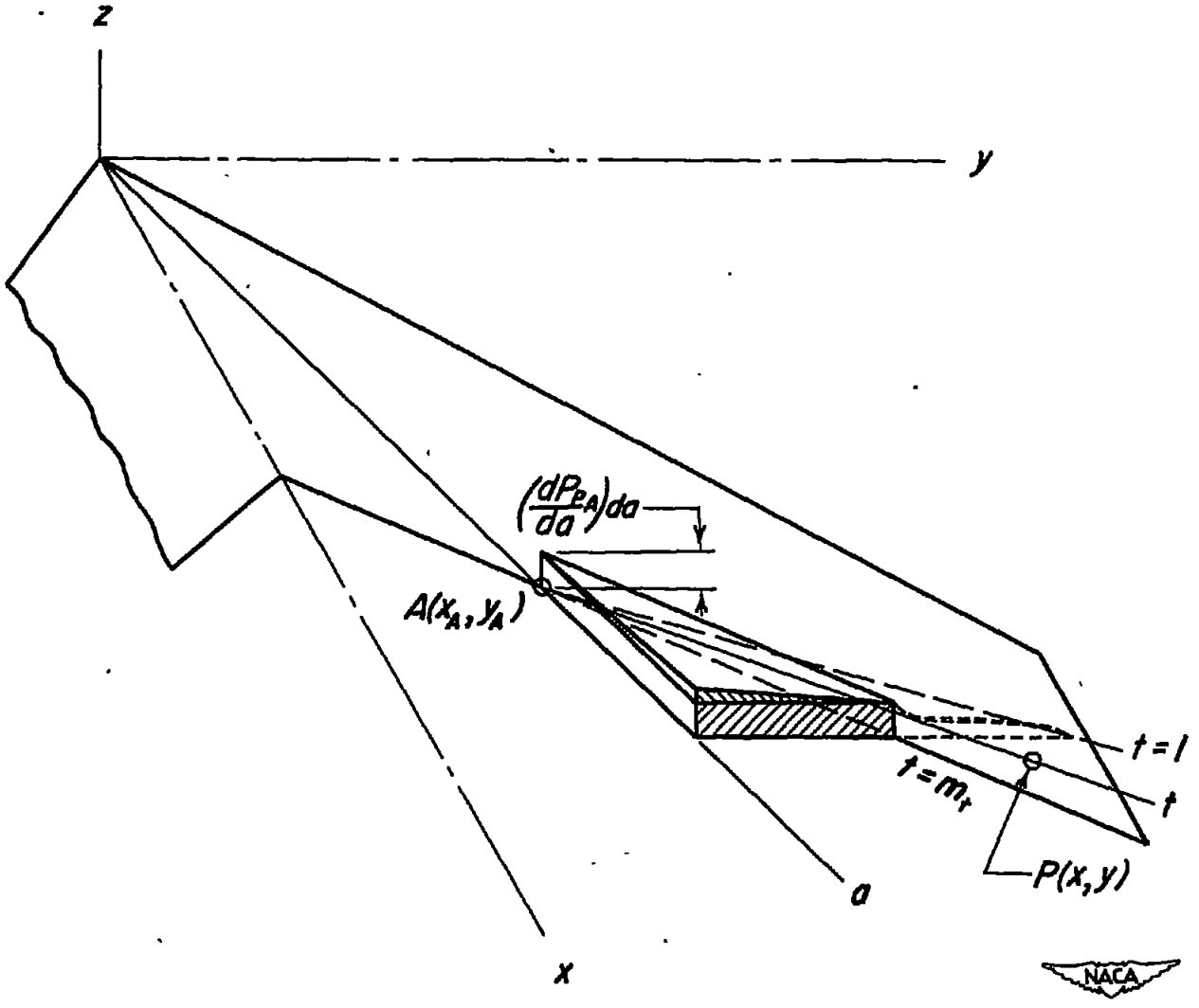

Figure 4.– An oblique pressure canceling sector in the wake.

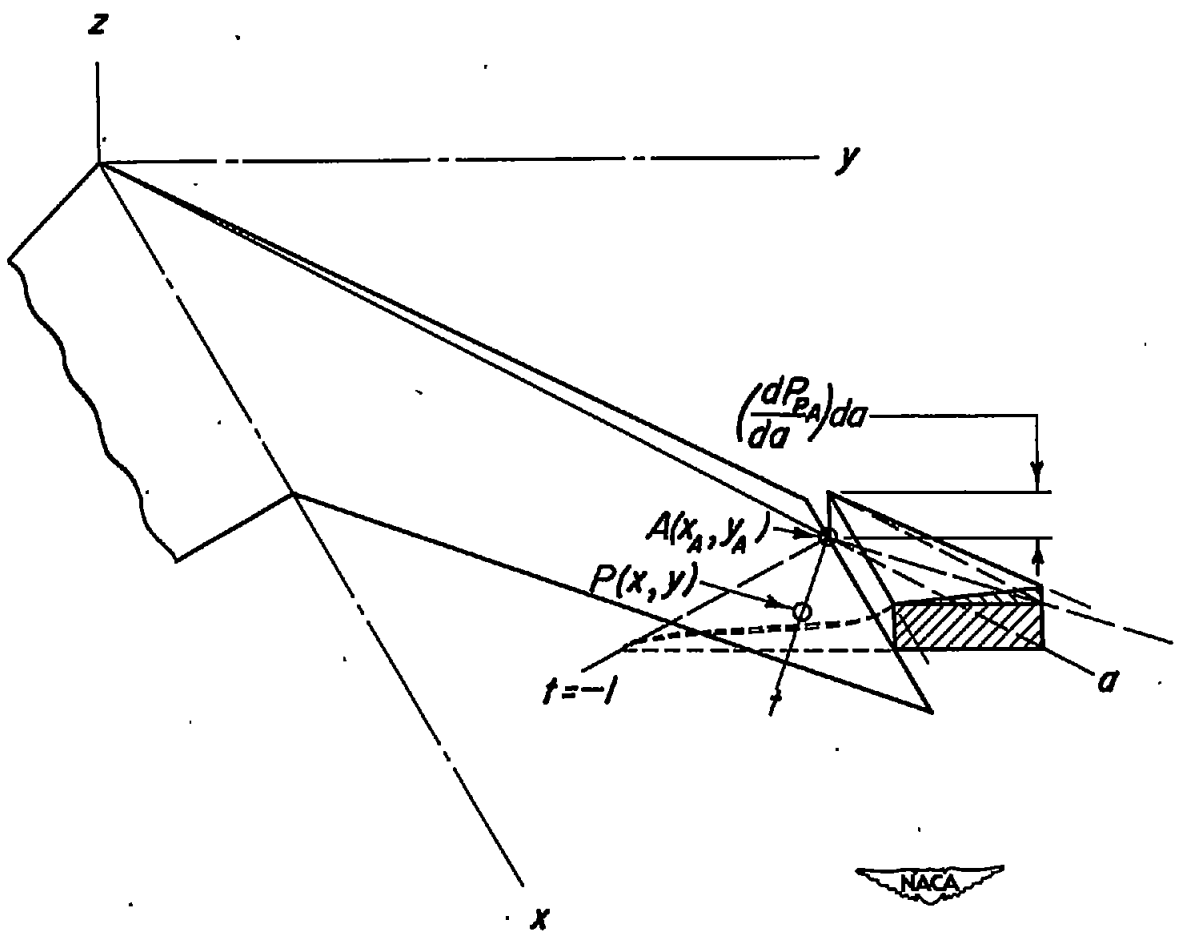

Figure 5.- Pressure canceling sector outboard of the tip.

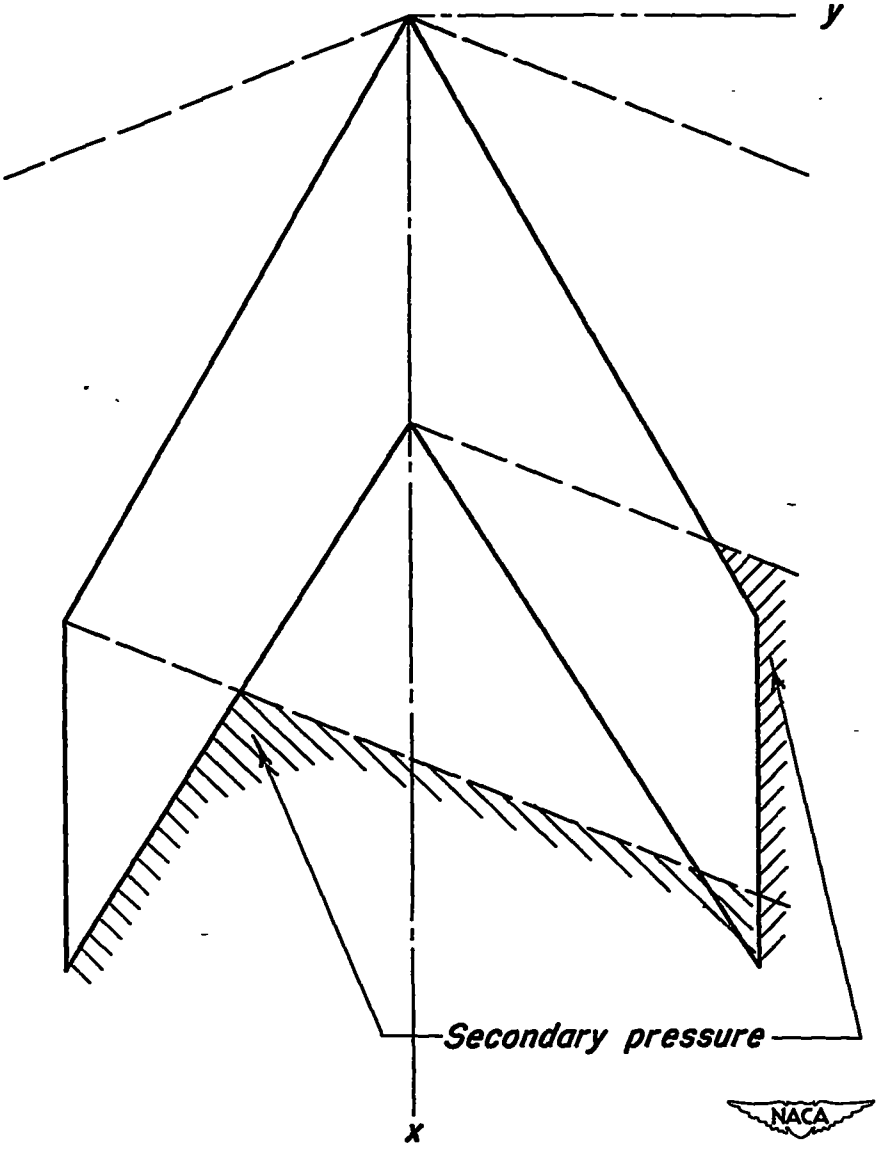

Figure 6.– Regions of secondary pressure in the wake and outboard of the tips and the leading edges.

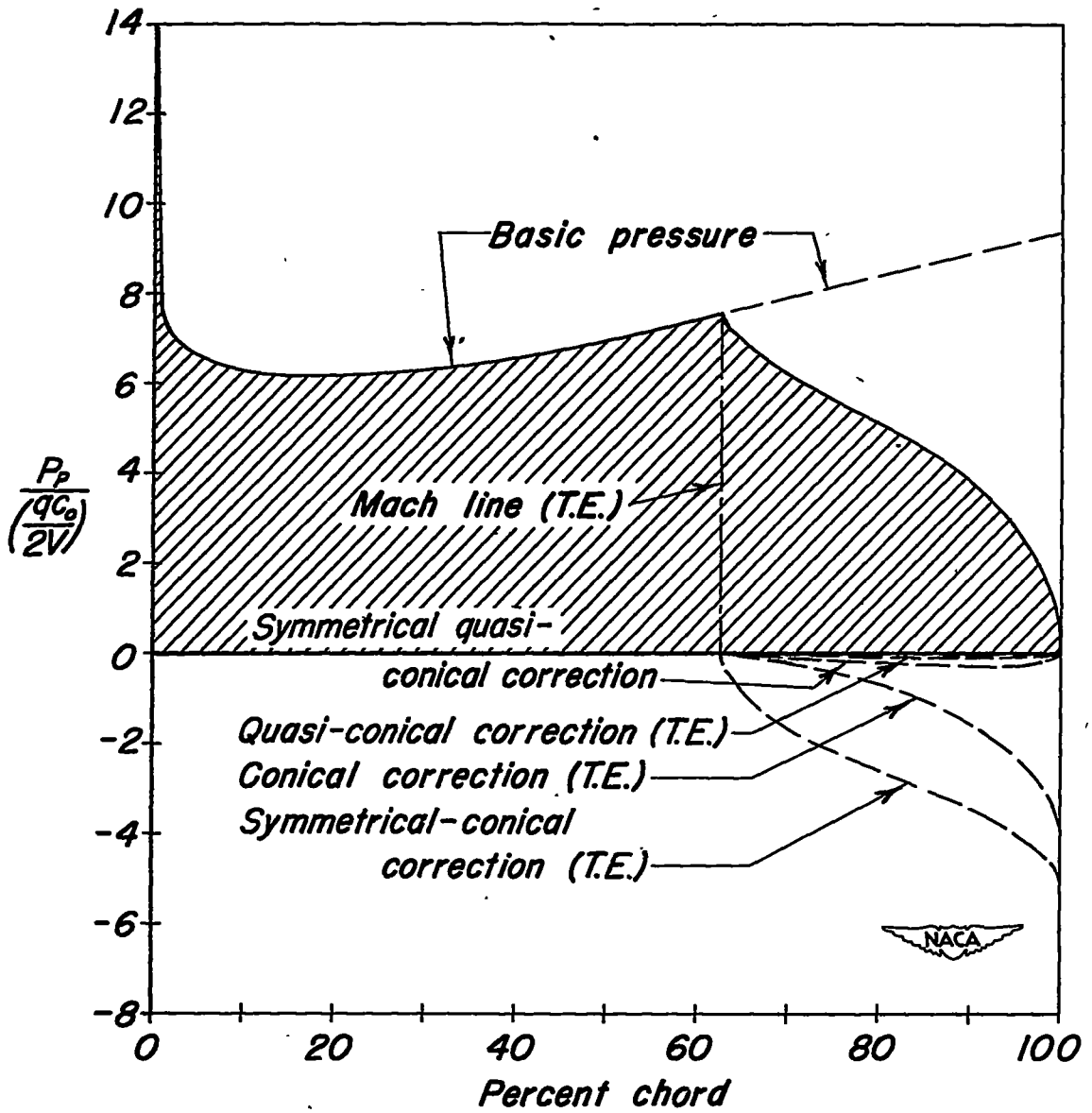

(a) Section A-A.

Figure 7.– Pressure distributions along various sections of the illustrative plan form in steady pitch.

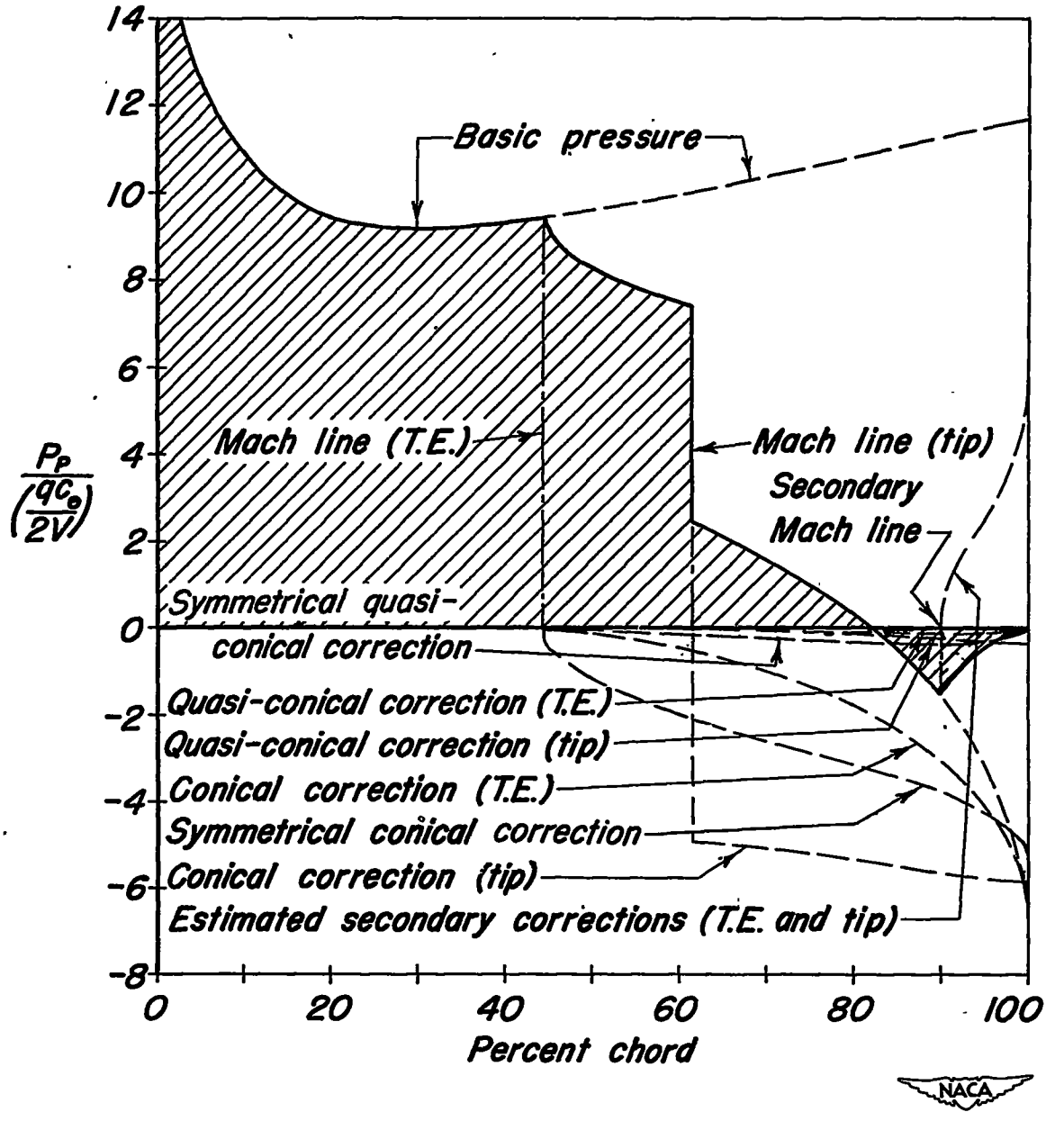

(b) Section B-B.

Figure 7.- Continued.

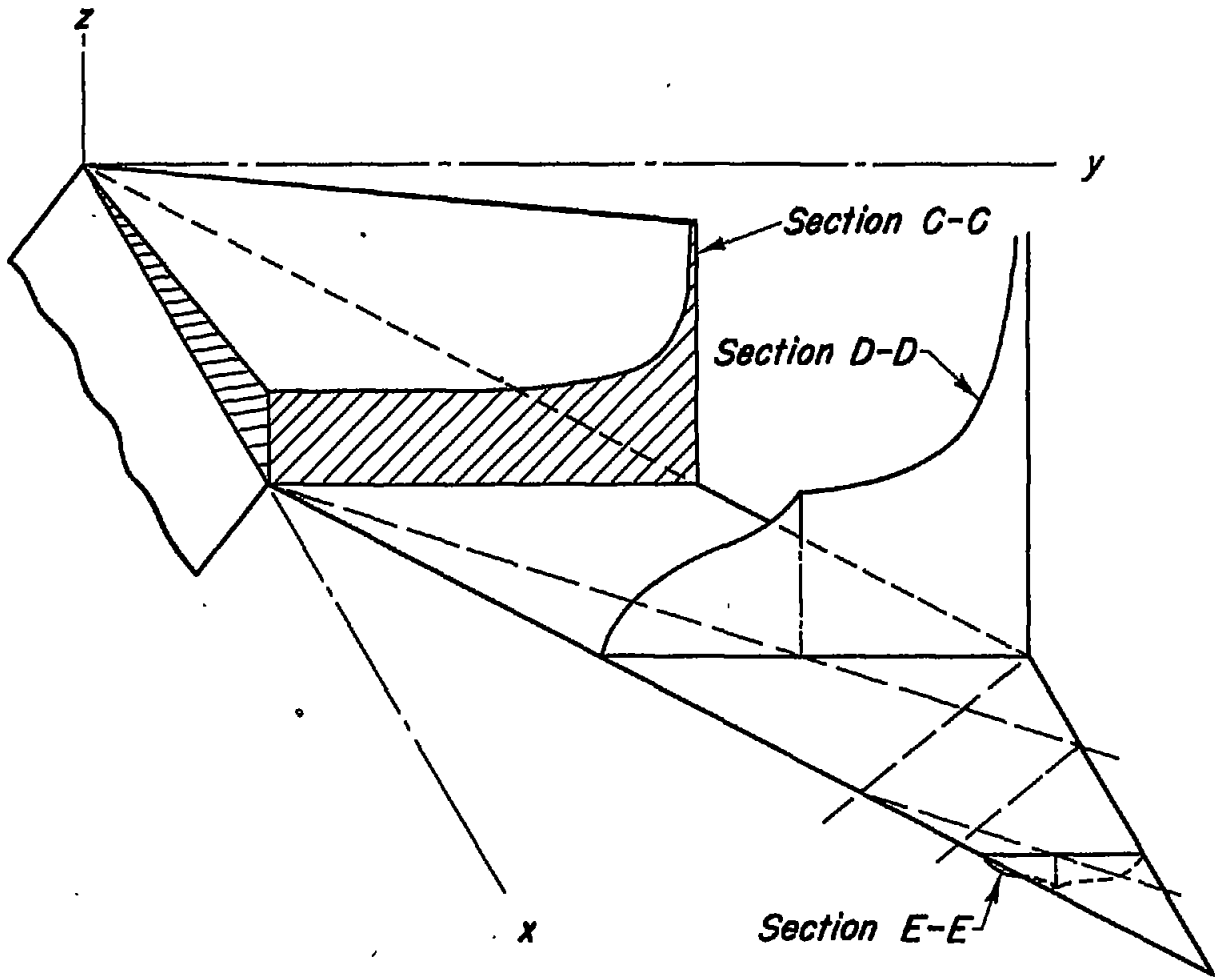

(c) Sections C-C, D-D, E-E.

Figure 7.– Concluded.

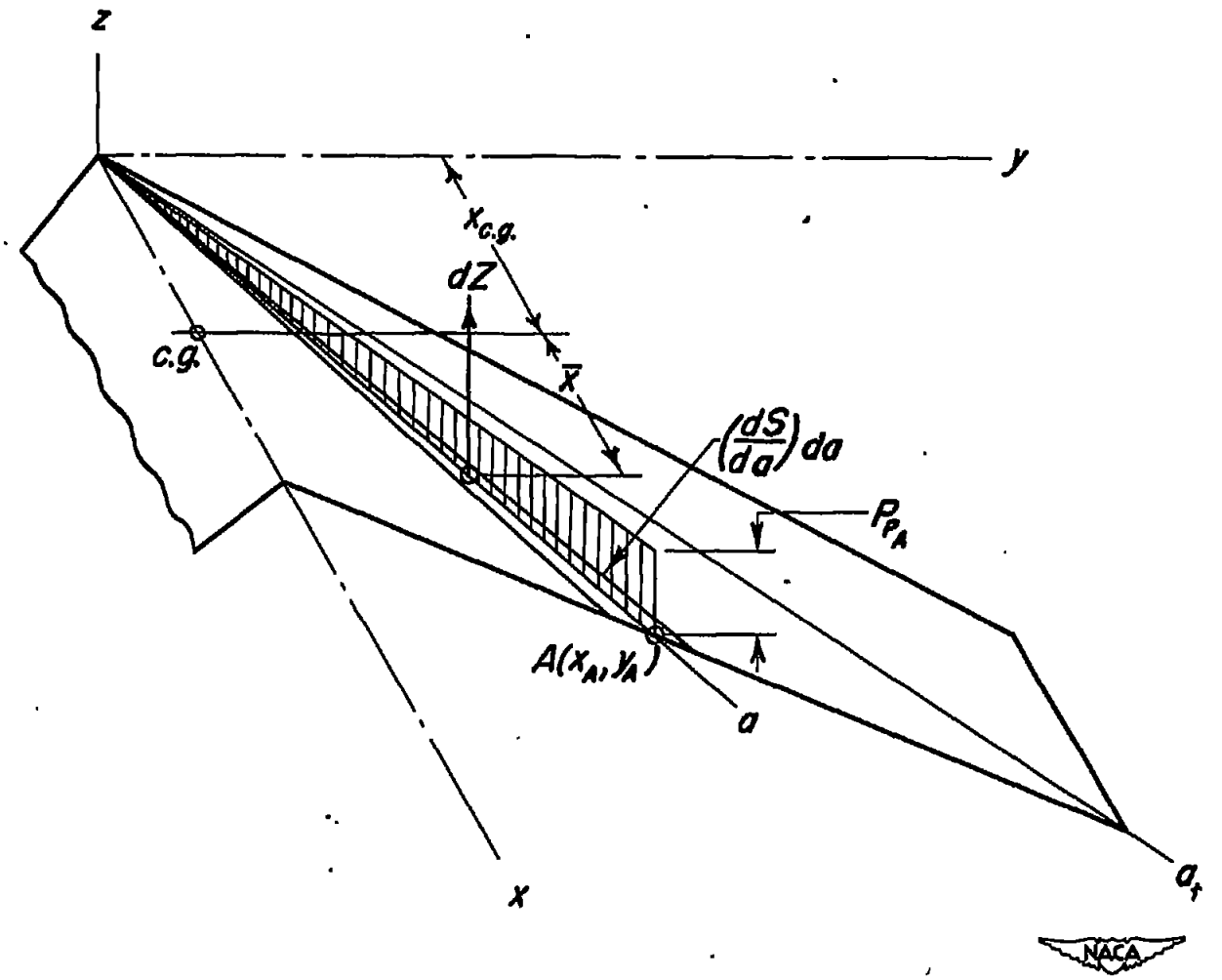

Figure 8.– Force on element of wing area due to basic pressure.

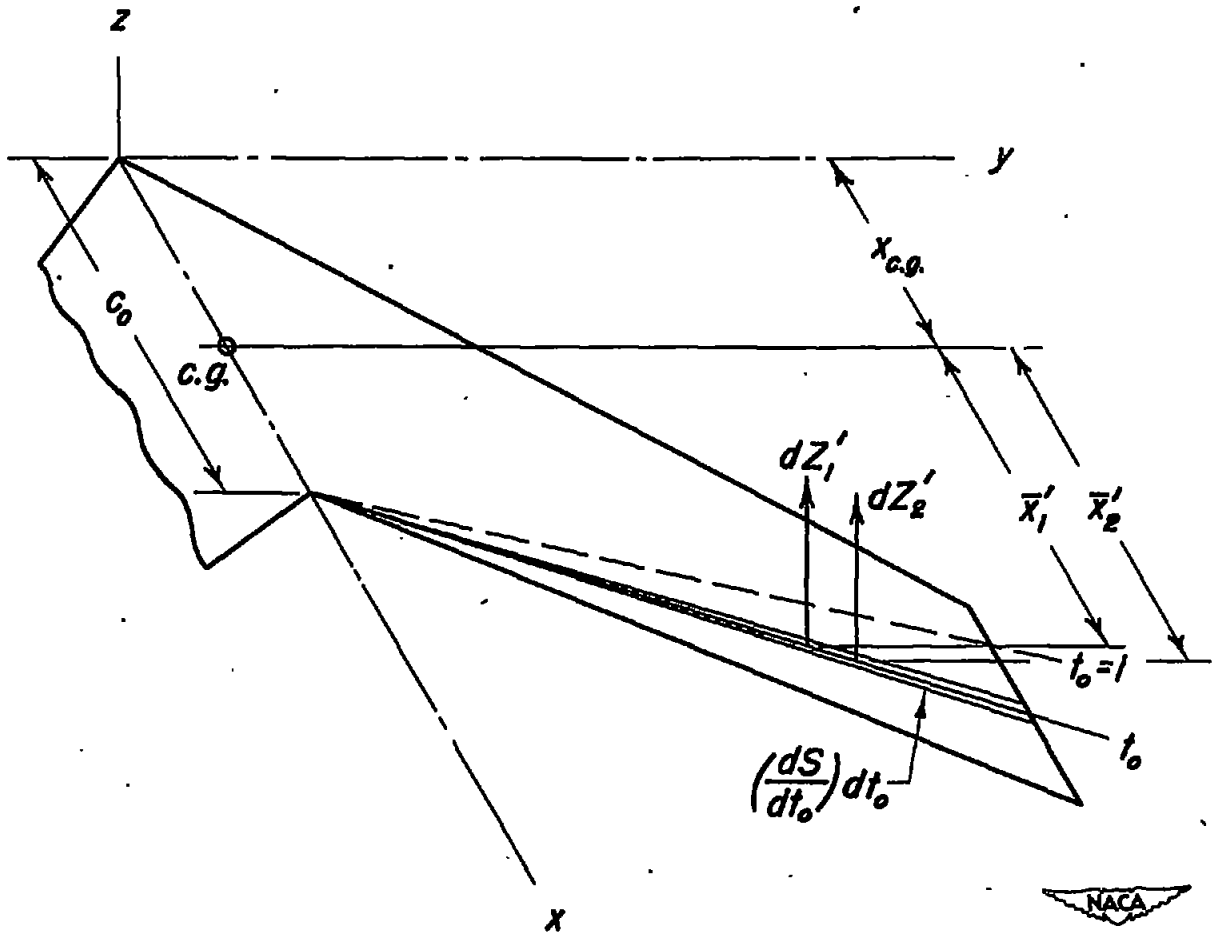

Figure 9.– Forces on an element of wing area due to the conical and quasi-conical components of the symmetrical pressure canceling sector in the wake.

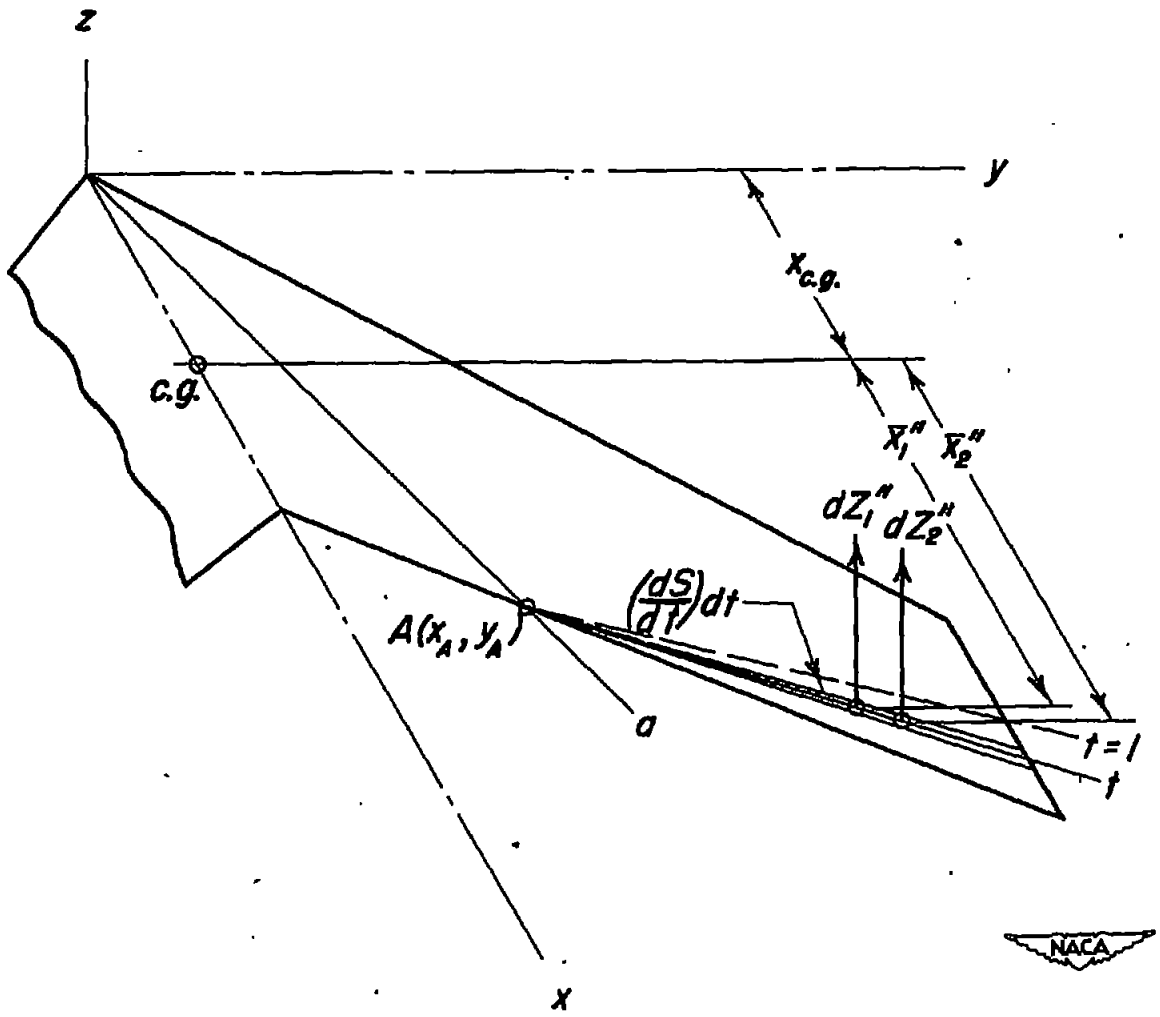

Figure 10.– Forces on an element of wing area due to the conical and quasi-conical components of an oblique pressure canceling sector in the wake.

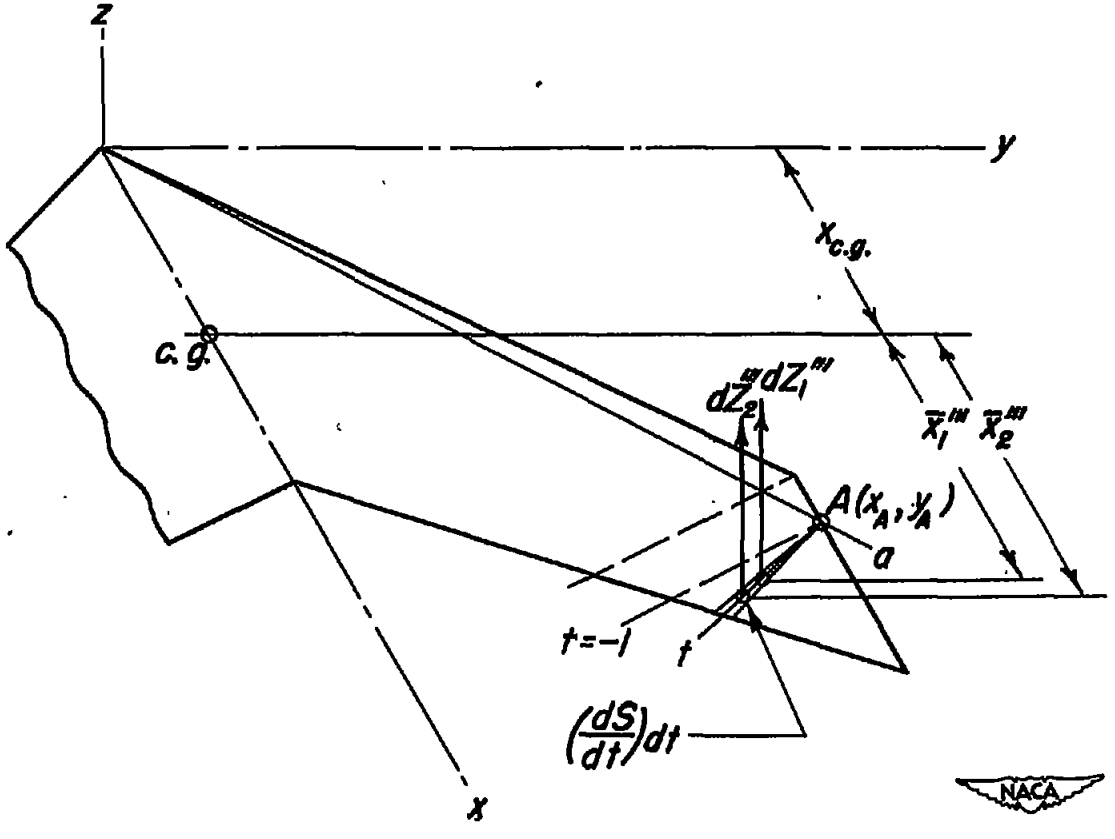

Figure 11. - Forces on an element of wing area due to the conical and quasi-conical components of a pressure canceling sector at the tip.