8638

NACA TN 2215

TECH LIBRARY KAFB, NM
0065033

NATIONAL ADVISORY COMMITTEE FOR AERONAUTICS

TECHNICAL NOTE 2215

COMPRESSIBILITY CORRECTION FOR TURNING ANGLES OF AXIAL-FLOW INLET GUIDE VANES

By Seymour Lieblein and Donald M. Sandercock

Lewis Flight Propulsion Laboratory
Cleveland, Ohio

Washington
December 1950

TECHNICAL LIBRARY
AFL 2811

TECH LIBRARY KAFB, NM

0065033

1.

NATIONAL ADVISORY COMMITTEE FOR AERONAUTICS

TECHNICAL NOTE 2215

1408

COMPRESSIBILITY CORRECTION FOR TURNING ANGLES OF AXIAL-FLOW INLET GUIDE VANES

By Seymour Lieblein and Donald M. Sandercock

SUMMARY

A simplified extension of the Prandtl-Glauert compressibility correction for isolated airfoils was obtained for airfoils in cascade with axial air inlet (accelerating flow) by considering the total lift coefficient of a cascade to be composed of the sum of two components. One lift coefficient is associated with a velocity of constant magnitude across the cascade and the other component is associated with a change in velocity across the cascade. From the hypothesis, an analytical variation of lift coefficient and air turning angle with inlet Mach number at fixed angle of attack was obtained for two-dimensional flow.

The two-dimensionally derived turning angles were made applicable for predicting the turning angles in annular flow by means of the concept of correcting the calculated turning angles to constant axial velocity across the cascade. The axial-velocity correction was based on the inlet velocity and the assumption of no change in circulation with changes in outlet axial velocity at a fixed inlet Mach number.

Agreement was found between the compressibility variation of the analytical corrected turning angles and limited experimental turning-angle data obtained from annular inlet-guide-vane cascades. The analytical turning-angle variations were presented as a compressibility correction for use in the design and the analysis of axial-flow-compressor inlet guide vanes of moderate camber and solidity.

INTRODUCTION

One of the important steps in the development of an axial-flow compressor is the successful design of the inlet guide vanes. The proper design of inlet guide vanes is essential for high compressor performance because of the dependence of the performance of the succeeding stages upon the attainment of the required flow distributions entering the first rotor row. In a commonly used method of inlet-guide-vane design for axial-flow compressors, the vane camber and the

setting angles are determined from design data that provide a relation between the angle of attack of the given vane sections and the corresponding air turning angles. Design-turning-angle data for inlet-guide-vane application have been obtained from cascade investigations (references 1 and 2) and theoretical calculations (reference 3) for essentially incompressible flow (inlet Mach number ≤ 0.30). 1408

The use of incompressible-turning-angle data for the design of guide vanes operating at high inlet Mach numbers has generally resulted in several degrees of overturning compared with the low Mach number results. Corresponding deviations in the angle of attack of the first rotor row were consequently incurred at the design condition. The effect of compressibility on the turning angle of inlet guide vanes designed on the basis of low Mach number data therefore becomes an important consideration for high Mach number applications such as to high-mass-flow subsonic and supersonic compressors. Although the effect of compressibility on the turning angles of blades in cascade has received some attention (references 3 and 4), the methods presented are not directly applicable to the general design of inlet guide vanes.

An analysis was conducted at the NACA Lewis laboratory to establish a compressibility, or Mach number, correction for use in the design and the analysis of axial-flow inlet guide vanes set at a fixed angle of attack. The analysis postulates that for unstaggered cascades at moderate values of solidity and camber, the circulation about a given airfoil section at fixed solidity and angle of attack varies primarily as the compressibility of the fluid (local Mach numbers about the airfoil surfaces). The corresponding changes in outlet tangential velocity in combination with the changes in outlet axial velocity then determine the variation in air turning angle over the flow range of the cascade. An analytical variation of turning angle with inlet Mach number was developed on the basis of an hypothesis and a simplified extension to cascade airfoils in two-dimensional flow of the Prandtl-Glauert compressibility correction for isolated airfoils (reference 5). In order to provide a development that contained the effects of both inlet and outlet Mach number, the hypothesis considered the total lift coefficient of an accelerating cascade airfoil at a given turning angle to be composed of the sum of two components. One lift coefficient component is associated with the velocity of constant magnitude across the blade and the other component is associated with the change in velocity across the blade. The results obtained from the two-dimensional analysis were then generalized and made applicable for predicting the turning angles in annular flow by means of the concept of adjusting the turning angle for changes in axial velocity across the blade (references 1 and 6). The axial-velocity correction was based on the inlet axial velocity and the assumption of no change in circulation with changes in outlet axial velocity at a given inlet Mach number.

1408

Good correlation was found between the analytical variation of corrected turning angle and limited available test data obtained from several different inlet-guide-vane annular cascades previously investigated at the Lewis laboratory as components of axial-flow compressors. The analytical results are presented, within the limitations of the development, as a generalized blade-element compressibility correction for use in the design and the analysis of axial-flow-compressor inlet guide vanes.

SYMBOLS

The following symbols are used in this report:

A annulus area

a local speed of sound

C_L lift coefficient

c blade chord

D blade-element drag

d axial distance from vane trailing edge to downstream measuring station

F blade-element force

g acceleration due to gravity

K constant

L blade-element lift

M Mach number

n exponent of polytropic expansion

p static pressure

R gas constant

r radius to blade element

s blade spacing

1408

T total temperature

t static temperature

V velocity

ΔV change in velocity across blade

W blade-element mass flow

β_F angle between resultant of axial and tangential blade forces and normal to cascade axis

β_L angle between lift force and normal to cascade axis (lift angle)

γ ratio of specific heats

ϵ drag angle ($\tan^{-1} D/L$)

η_p polytropic efficiency

θ air turning angle

ρ density

σ solidity, c/s

Subscripts:

1 inlet to blade row (leading edge)

2 outlet measuring station

2' blade-row trailing edge

a axial direction

d design data

h hub

t tip

V referred to constant resultant velocity across blade

v referred to constant axial velocity across blade

ΔV referred to change in resultant velocity across blade

θ tangential direction

1408 * refers to incompressible flow

ANALYSIS

Nature of Compressibility Effect

Variations in turning angle over the range of flow of a cascade set at a fixed angle of attack (fig. 1(a)) depend upon the relative changes in the outlet tangential and axial velocities, as indicated in figure 1(b). For the purposes of analysis, it is more convenient to consider the turning angle in terms of ratios of the component velocities to the inlet axial velocity, where

$$\tan \theta = \frac{V_{\theta,2}}{V_{a,2}} = \frac{\left(\frac{V_{\theta,2}}{V_{a,1}}\right)}{\left(\frac{V_{a,2}}{V_{a,1}}\right)} \tag{1}$$

For a given cascade, the axial-velocity ratio depends primarily on the density ratio and is therefore a direct function of compressibility. The tangential-velocity ratio, which is related to the circulation about the vane, will be a function of the cascade solidity and stagger, compressibility (inlet and outlet Mach number), friction and drag losses, and Reynolds number. For a cascade at zero stagger (axial inlet) and given solidity in potential flow, the magnitude of the compressibility effect will depend upon the magnitude of the solidity. At zero solidity (isolated airfoil), the compressibility effect would be maximum and would tend to decrease as the solidity increases (reference 4).

For moderate values of camber and solidity, the cascade vanes tend to maintain their characteristics as airfoil sections. From the equation of the lift coefficient of vane sections in cascade with axial air inlet (appendix A),

$$\frac{V_{\theta,2}}{V_{a,1}} = \frac{1}{2} \sigma \cos \beta_L \left[1 + \left(\frac{D}{L}\right) \tan \beta_L\right] C_L \tag{2}$$

it is seen that the tangential-velocity ratio of equation (1) is directly proportional to the lift coefficient. If small changes in lift angle and drag-lift ratio over the flow range of the cascade at

fixed angle of attack are neglected, the compressibility variation of the tangential-velocity ratio can therefore be evaluated from considerations of the lift coefficient.

1408

In incompressible flow, the pressure distributions around an isolated airfoil are such that, exempting Reynolds number effects, the lift coefficient tends to remain constant with changes in free-stream velocity. When a fluid is compressible, however, the relation between lift and free-stream dynamic pressure becomes nonlinear, and consequently the lift coefficient no longer remains constant with changes in free-stream conditions (references 7 and 8).

For airfoil sections in cascade at moderate values of solidity and camber, similar variations in pressure will occur along the blade surfaces as the free-stream or resultant velocity is increased in compressible flow. In a cascade, however, because of the change in resultant velocity across the blade row, the local pressure coefficients will depend not only on the magnitude of the inlet free-stream velocity but also on the change in free-stream velocity across the cascade. The compressibility variation of the cascade lift coefficient can therefore be related to both the inlet and outlet Mach numbers.

Development of Equations

Lift coefficient. - The compressibility variation of the lift coefficient was developed to include the effect of both inlet and outlet Mach numbers and is restricted to moderate values of turning angle and solidity. The basic hypothesis is that the total lift coefficient of a blade section in cascade can be considered as the superposition of a lift coefficient associated with a free-stream or resultant velocity of constant magnitude across the vane (isolated airfoil component) and a lift coefficient associated with the increase in resultant velocity across the vane (cascade component), as shown in figure 1(a), or

$$C_L = (C_L)_V + (C_L)_{\Delta V} \tag{3}$$

The total compressibility effect will then depend upon the compressibility corrections applied to each lift-coefficient component. Inasmuch as the isolated component is intended to represent the lift coefficient obtained from a resultant velocity of constant magnitude across the blade element, its compressibility variation will be similar to that of an isolated airfoil. For simplicity, the Prandtl-Glauert compressibility approximation (reference 5) rather than the more accurate Kármán-Tsien correction (reference 7) for isolated airfoils is used. Applying the Prandtl-Glauert compressibility correction in terms of inlet Mach number yields

$$(C_L)_V = \frac{(C_L)^*_V}{\sqrt{1-M_1^2}} \tag{4}$$

1408

where the asterisk refers to the incompressible state. For the cascade component, a compressibility correction similar in form, but based on some function of the change of the resultant Mach number across the blade, is prescribed. The compressibility correction for the cascade component is assumed to be given by the relation

$$(C_L)_{\Delta V} = \frac{(C_L)^*_{\Delta V}}{\sqrt{1-(M_2^2-M_1^2)}} \tag{5}$$

The total compressible lift coefficient obtained from the preceeding hypotheses, which divide the effect into one due to a change in inlet Mach number and one due to a change in outlet Mach number with respect to the inlet Mach number, is then obtained as

$$C_L = \frac{(C_L)^*_V}{\sqrt{1-M_1^2}} + \frac{(C_L)^*_{\Delta V}}{\sqrt{1-(M_2^2-M_1^2)}} \tag{6}$$

The magnitudes of the two lift-coefficient components in equation (6) are evaluated from a consideration of the general relation between the lift coefficient and the velocity components across a cascade. From equation (2), it is seen that for given values of inlet velocity, turning angle, and drag-lift ratio the lift coefficient is directly proportional to the outlet tangential velocity. Thus, from equation (2) and figure 1(a),

$$(C_L)^*_V = K(V_\theta)^*_V$$

and

$$(C_L)^*_{\Delta V} = K\left[V_{\theta,2}^* - (V_\theta)^*_V\right]$$

Therefore

$$(C_L)^*_V = \frac{(V_\theta)^*_V}{V_{\theta,2}^*} C_L^* = \left(\frac{V_1}{V_2}\right)^* C_L^* \tag{7}$$

and

$$(C_L)^*_{\Delta V} = \left[1 - \left(\frac{V_1}{V_2}\right)^*\right] C_L^* \tag{7b}$$

1408

The total compressible lift coefficient is obtained from equations (6) and (7) as

$$C_L = \left[\frac{\left(\frac{V_1}{V_2}\right)^*}{\sqrt{1-M_1^2}} + \frac{1 - \left(\frac{V_1}{V_2}\right)^*}{\sqrt{1-(M_2^2-M_1^2)}}\right] C_L^* \tag{8}$$

which, from continuity, for two-dimensional cascade flow with constant area normal to the axis becomes

$$\frac{C_L}{C_L^*} = \frac{\cos\theta^*}{\sqrt{1-M_1^2}} + \frac{1 - \cos\theta^*}{\sqrt{1-(M_2^2-M_1^2)}} \tag{9}$$

Turning angle. - The compressibility variation of the turning angle in two-dimensional flow is obtained by combining equations (1), (2), and (9) in the form of the ratio of the tangents of the compressible and incompressible turning angles to give

$$\frac{\tan\theta}{\tan\theta^*} = \left[\frac{\cos\theta^*}{\sqrt{1-M_1^2}} + \frac{1 - \cos\theta^*}{\sqrt{1-(M_2^2-M_1^2)}}\right] \frac{\left(\frac{V_{a,2}}{V_{a,1}}\right)^* \cos\beta_L \left[1 + \left(\frac{D}{L}\right)\tan\beta_L\right]}{\left(\frac{V_{a,2}}{V_{a,1}}\right) \cos\beta_L^* \left[1 + \left(\frac{D}{L}\right)^* \tan\beta_L^*\right]} \tag{10}$$

Equation (10) represents the variation of compressible turning angle in strictly two-dimensional flow for which the variation in outlet velocity with inlet Mach number for a given incompressible turning angle is fixed. In the flow across an annular cascade, however, because of the existence of annulus passage taper and spanwise pressure gradients resulting from centrifugal forces, a large variation in outlet velocity can be obtained at a given value of turning angle and inlet Mach number. In order to extend the analysis to the case of variable outlet velocity likely to be encountered in annular flow, the turning angles calculated for two-dimensional flow were therefore corrected to a fixed reference velocity for the entire Mach number range.

1408

The fixed reference velocity was adopted as that corresponding to a constant axial velocity across the blade based on the inlet axial velocity. For the correction, it is assumed that if the axial-velocity changes across the blade element are not large (less than approximately 20 percent), the circulation about a blade element at fixed angle of attack and inlet Mach number remains essentially constant with variations in outlet velocity (constant tangential velocity). The velocity diagram for the constant-axial-velocity correction is illustrated in figure 2 and is given by the following equation

$$\tan \theta_v = \frac{V_{a,2}}{V_{a,1}} \tan \theta \tag{11}$$

The inlet axial velocity was selected as the reference axial velocity for the turning-angle correction because, under the assumption of no change in tangential velocity with variation in outlet velocity, it results in a corrected turning angle corresponding to given values of circulation and inlet Mach number that is independent of the magnitude of the calculated outlet axial velocity. In actual cascade flow at moderate solidities, variations in tangential velocity actually do occur as the outlet velocity is varied at a fixed blade setting and inlet Mach number because of the effects of radial flow and changes in losses and surface boundary layer. As a first approximation, however, these effects can be considered negligible within the range of conditions covered by the analysis.

The solution of equation (10) for given values of incompressible turning angle over a range of inlet Mach numbers is discussed in detail in appendix B. The solution was based on a value of drag-lift ratio equal to 0.07 corresponding to a drag angle of 4°, a polytropic efficiency of 0.95, and subsonic outlet Mach numbers.

RESULTS AND DISCUSSION

Theoretical Variations

Lift coefficient. - The variation of the ratio of compressible to incompressible lift coefficient for two-dimensional flow calculated from equation (9) is plotted in figure 3 for several incompressible turning angles from 0° to 40°. A turning angle of 0° represents the limiting curve as the magnitude of the incompressible lift coefficient

goes to zero, and corresponds physically to the case of a cascade of symmetrical airfoils producing no turning. The zero turning curve indicates that, as the incompressible lift coefficient approaches zero, the magnitude of the compressible lift coefficient also approaches zero for all inlet Mach numbers, but the ratio of the two quantities maintains a finite value in the limit. When compared with the compressibility variation as the incompressible turning approaches 0°, which is identically the Prandtl-Glauert correction for an isolated or unturned airfoil, the theoretical cascade flow, as represented by equation (9), introduces practically no effect on the compressibility variation of the lift coefficient up to approximately 30° of turning. For an incompressible turning angle of 40°, a slightly greater rate of change of lift coefficient with inlet Mach number than that for turnings approaching 0° is indicated. The rise in lift-coefficient ratio is attributed to the relatively greater effect of the cascade-component compressibility term in equation (9) as higher outlet Mach numbers are obtained for a given inlet Mach number at the higher turning angles. In general, the equations indicate that, for airfoil sections in cascade flow with axial inlet, the variation of lift coefficient with inlet Mach number might be expected to be similar in trend and magnitude to that of an isolated airfoil.

1408

Turning angle. - The effect of compressibility on the air turning angle of a blade row as given by equation (10) is shown in figure 4 as a plot of the ratio of the tangent of the compressible turning angle to the tangent of the incompressible turning angle against the inlet Mach number. The compressibility variation of the turning angle in two-dimensional flow is dependent to a large extent upon the magnitude of the incompressible turning angle. The variation ranged from a maximum increase in the tangent ratio following the Prandtl-Glauert correction term for turning angles approaching zero to ratio values less than 1 at 40° of incompressible turning. At a given inlet Mach number, a general decrease in the compressibility effect with increasing magnitude of turning angle is indicated. The decrease is due to the greater effect of compressibility in increasing the axial-velocity ratio across the blade compared with the increase in tangential velocity resulting from the compressibility increase in the lift coefficient (fig. 3). At a given incompressible turning angle, the tendency of the tangent ratio to decrease sharply as the high inlet Mach numbers are approached is again due to the greater rate of increase of the axial velocity with respect to the rate of increase of the tangential velocity.

The effect of compressibility on the turning angles obtained from two-dimensional flow shown in figure 4, corrected to constant axial velocity according to equation (11), is shown in terms of the tangent

ratio in figure 5. A variation with inlet Mach number similar to that of the lift coefficient is obtained, which indicates that the compressibility effect on the corrected turning angle is very nearly independent of the magnitude of the incompressible turning angle. The similarity between the lift-coefficient and corrected-turning-angle variations is to be expected, inasmuch as the lift coefficient for axial air inlet is directly proportional to the tangent of the corrected turning angle (equations (1) and (2)).

1408

Experimental Correlation

Vane designs and equipment. - Guide-vane-turning-angle data over a range of inlet Mach numbers were obtained from unreported investigations of several sets of guide vanes designed for various axial-flow compressors. The guide vanes were investigated as separate components in induction-type annular cascades of constant outer diameter and with a bellmouth inlet. A typical cascade configuration is shown in figure 6 and detailed identification data for the various blade designs and annuli included in the survey are presented in table I. For the vanes with radially varying chord length, the trailing-edge location (station 2') is taken as the radial plane containing the axial projection of the trailing-edge point of the maximum chord length. The axial distance from the inlet face of the bellmouth and the nose of the inlet hub section to the guide-vane leading edge varied from approximately 14 to 20 inches for all vanes. The annulus-area ratio across the vanes (A'_2/A_1) was 1.0 for all vanes except for vane C, which had an area ratio of 0.91.

The investigations were conducted with ambient inlet air; the flow at the inlet to the vanes was substantially uniform and axial in all cases and the angle of the air leaving the blade row was directly taken as the air turning angle. Outlet-air angles were measured by claw-type instruments for designs A to D and by cone-type instruments for design E and were circumferentially averaged at each radial position. Absolute accuracy of the measured turning angle is estimated to be $\pm 0.5^{\circ}$ and the relative accuracy from point to point is believed to be $\pm 0.2^{\circ}$. The Reynolds number based on vane chord varied from a minimum value of 2.8×10^5 for vane C at an inlet Mach number of 0.272 to a maximum value of 7.1×10^5 for vane B at an inlet Mach number of 0.696.

Experimental data. - The variation of turning angle measured at the outlet instrument station with inlet Mach number at a fixed outlet radial position and fixed vane setting is shown in figure 7. Turning angles at several radial positions were investigated for vanes A and

B, but only one radial position was investigated for vanes C, D, and E (near the tip section for C, at the pitch section for E, and near the hub section for D). For vanes A and B, the turning angles decreased from hub to tip. In order to eliminate data containing pronounced secondary and induced flow effects, data in the vane end regions (approximately 20 percent of the vane at each end) were not considered. Turning data for vane E was obtained from measurements at only one circumferential position, which had been determined as representative of the circumferential average from previous investigations. Only data values at inlet Mach numbers greater than 0.25 corresponding to a Reynolds number of approximately 2.8×10^5 for standard conditions and a blade chord of 2 inches were included. This lower Mach number limit was established in order to limit the comparison to minimum values of Reynolds number equivalent to the average Reynolds number of the reference low Mach number design data (references 1 and 2). The upper limit of the turning-angle variation was attained when the flow became choked. 1408

Comparison. - The measured turning angles of figure 7 were corrected to constant axial velocity according to equation (11). The comparison of the compressibility variation of experimental corrected turning angle for vanes in annular cascade with the theoretical corrected turning angles obtained from two-dimensional flow corresponding to figure 5 is shown in figure 8. Corrected turning angles for vane E could not be calculated because of insufficient velocity data. The correlation between the calculated and experimental turning angles is, in general, good; the best agreement is obtained from the vanes with constant thickness. On the basis of the correlation with the limited available data of figure 8, it is felt that the theoretical compressibility variation of figure 5 can be used to predict the effect of compressibility on the turning angle of inlet guide vanes in an annular cascade for the range of solidities and axial-velocity ratios investigated.

Design Application

The design of a particular type of inlet guide vane primarily involves the determination of the section cambers and the angle settings necessary to produce a required velocity diagram at a given inlet Mach number. When the inlet Mach number of the available design data is different from the inlet Mach number of the design application, the correct turning angle to be used for selecting the vane section from the design data can be obtained from the following procedure:

1408

If turning angles corrected to constant axial velocity based on inlet axial velocity are used, figure 5 can be directly applied. If actual (uncorrected) turning angles are used, the effects of the axial-velocity ratio should be considered. From equation (11), for a given vane section, the relation between the compressible turning angle of the required velocity diagram at a given inlet Mach number and the incompressible turning angle is given by

$$\frac{\tan\theta}{\tan\theta^*} = \frac{\left(\frac{V_{a,1}}{V_{a,2}}\right)}{\left(\frac{V_{a,1}}{V_{a,2}}\right)^*}\left(\frac{\tan\theta_v}{\tan\theta_v^*}\right)$$

Similarly, for the turning angle and the inlet Mach number of the available design data for the same vane section,

$$\frac{\tan\theta_d}{\tan\theta_d^*} = \frac{\left(\frac{V_{a,1}}{V_{a,2}}\right)_d}{\left(\frac{V_{a,1}}{V_{a,2}}\right)_d^*}\left(\frac{\tan\theta_v}{\tan\theta_v^*}\right)_d$$

It therefore follows that the turning angle to be used for selecting the proper vane section is given by

$$\tan\theta_d = \frac{\left(\frac{V_{a,1}}{V_{a,2}}\right)_d \left(\frac{\tan\theta_v}{\tan\theta_v^*}\right)_d}{\left(\frac{V_{a,1}}{V_{a,2}}\right)\left(\frac{\tan\theta_v}{\tan\theta_v^*}\right)}\tan\theta \tag{12}$$

where the corrected tangent ratios are obtained from figure 5 for the respective inlet Mach numbers. For design data obtained for essentially incompressible flow and constant axial velocity (two-dimensional data), equation (12) reduces to

$$\tan\theta_d = \left(\frac{V_{a,2}}{V_{a,1}}\right)\left(\frac{\tan\theta_v^*}{\tan\theta_v}\right)\tan\theta \tag{13}$$

In determining the axial-velocity ratio across a vane section, the effect of vane wakes and of change in displacement thickness of the annular boundary layer in reducing the real-flow area should be included. 1408

The limiting values of compressible turning angle for a given value of incompressible turning angle in figure 5 have been determined from considerations of two-dimensional flow with zero vane and vane-wake thickness and may therefore not be representative of the corresponding limiting values in annular flow. For cases in which the design inlet Mach number for a given turning angle is greater than the limiting inlet Mach number for that angle given in figure 5, it is suggested that the compressibility ratio be taken as the maximum value for that angle. Because of the limitations of the correlation and the assumption involved in the angle adjustment for variable axial velocity, the compressibility correction of figure 5 is considered to be limited for good accuracy to turning angles up to approximately 30° and increases in axial velocity across the vane from about 0 to 20 percent.

SUMMARY OF RESULTS

From an investigation of the effects of compressibility on the flow across inlet guide vanes at moderate values of camber and solidity based on an hypothesis and a simplified extension of the Prandtl-Glauert compressibility correction for isolated airfoils to airfoils in cascade, the following result was obtained for cascades with an axial air inlet (accelerating flow) in two-dimensional flow.

When the turning angles derived from two-dimensional flow were corrected to constant axial velocity, the theoretical variation of corrected turning angle was in agreement up to 29° with available experimental turning-angle data obtained from investigations of several axial-flow-compressor inlet-guide-vane designs in an annular cascade, and were presented as compressibility corrections for use in the design and the analysis of axial-flow-compressor inlet guide vanes.

Lewis Flight Propulsion Laboratory,
National Advisory Committee for Aeronautics,
Cleveland, Ohio, August 15, 1950.

1408

APPENDIX A

LIFT COEFFICIENT

The lift coefficient of an airfoil section in cascade is the ratio of the lift force per unit area of the element to the inlet dynamic pressure, or

$$C_L = \frac{L}{c \frac{1}{2} \rho_1 V_1^2} \tag{A1}$$

For two-dimensional compressible flow with losses, the lift force per unit vane length (fig. 1(c)) is given by

$$L = \frac{F_\theta}{\cos \beta_L} - D \tan \beta_L \tag{A2}$$

in which the lift angle is not necessarily given by the angle of the vector mean of the inlet and outlet velocities. In terms of the drag-lift ratio,

$$L = \frac{F_\theta}{\cos \beta_L} - L \left(\frac{D}{L}\right) \tan \beta_L$$

or

$$L = \frac{F_\theta}{\cos \beta_L \left[1 + \left(\frac{D}{L}\right) \tan \beta_L\right]} \tag{A3}$$

From momentum considerations for flow with an axial inlet, in unit time,

$$F_\theta = WV_{\theta,2} = \rho_1 V_{a,1} s_1 V_{\theta,2}$$

Substituting this equation in equation (A3) yields

$$L = \frac{\rho_1 V_{a,1} s_1 V_{\theta,2}}{\cos \beta_L \left[1 + \left(\frac{D}{L}\right) \tan \beta_L\right]} \tag{A4}$$

Substitution of equation (A4) in equation (A1) results, for an axial air inlet, in

1408

$$C_L = \frac{\rho_1 V_{a,1} s_1 V_{\theta,2}}{\frac{1}{2} \rho_1 V_{a,1}^2 \, c \cos \beta_L \left[1 + \left(\frac{D}{L}\right) \tan \beta_L\right]}$$

from which is obtained

$$\frac{V_{\theta,2}}{V_{a,1}} = \frac{1}{2} \sigma \cos \beta_L \left[1 + \left(\frac{D}{L}\right) \tan \beta_L\right] C_L \tag{2}$$

1408

APPENDIX B

SOLUTION OF TURNING ANGLE EQUATION

The solution of the compressible turning angle for given values of incompressible turning angle, inlet Mach number, and efficiency given by equation (10) requires the evaluation of the quantities, outlet Mach number, both compressible and incompressible lift angle, and axial-velocity ratio.

For two-dimensional incompressible flow, the axial-velocity ratio is 1, and the resultant force angle (fig. 1(c)) is given by the direction of the vector mean of the inlet and outlet velocities (reference 9). Thus, for the incompressible state, the lift angle is given by

$$\beta_L^* = \tan^{-1}\left(\frac{1}{2}\tan\theta^*\right) + \epsilon^* \tag{B1}$$

For compressible flow, the following expressions are derived:

Outlet Mach number. - For two-dimensional flow across a cascade, the continuity equation is

$$\rho_1 V_{a,1} = \rho_2 V_2 \cos\theta$$

or, in terms of Mach number for an axial inlet,

$$\rho_1 a_1 M_1 = \rho_2 a_2 M_2 \cos\theta \tag{B2}$$

From the energy equation,

$$t = \frac{T}{1 + \frac{\gamma-1}{2} M^2}$$

the polytropic relation,

$$\frac{t_1}{t_2} = \left(\frac{\rho_1}{\rho_2}\right)^{n-1} = \left(\frac{p_1}{p_2}\right)^{\frac{n-1}{n}}$$

and the equation for sonic velocity,

$$a = \sqrt{\gamma g R t}$$

1408

it can be shown that

$$\frac{\rho_1}{\rho_2} = \left(\frac{a_1}{a_2}\right)^{\frac{2}{n-1}} = \left(\frac{1 + \frac{\gamma-1}{2} M_2^{\,2}}{1 + \frac{\gamma-1}{2} M_1^{\,2}}\right)^{\frac{1}{n-1}} \tag{B3}$$

Substituting equation (B3) in equation (B2) yields

$$\cos\theta = \frac{M_1}{M_2}\left(\frac{1 + \frac{\gamma-1}{2} M_2^{\,2}}{1 + \frac{\gamma-1}{2} M_1^{\,2}}\right)^{\frac{n+1}{2(n-1)}} \tag{B4}$$

The polytropic exponent n was evaluated from the polytropic efficiency for an expansion process according to the equation

$$n = \frac{1}{1 - \frac{\gamma-1}{\gamma}\eta_p} \tag{B5}$$

<u>Axial-velocity ratio.</u> - From the continuity equation,

$$\frac{V_{a,2}}{V_{a,1}} = \frac{\rho_1}{\rho_2} \tag{B6}$$

From the energy and the sonic equations,

$$\frac{a_1^{\,2}}{\gamma-1} + \frac{V_1^{\,2}}{2} = \frac{a_2^{\,2}}{\gamma-1} + \frac{V_2^{\,2}}{2}$$

1408

or

$$\left(\frac{a_2}{a_1}\right)^2 = 1 - \frac{\gamma-1}{2} M_1^{\ 2}\left[\left(\frac{V_2}{V_1}\right)^2 - 1\right]$$

Using the polytropic relation for an axial inlet yields

$$\frac{\rho_2}{\rho_1} = \left\{1 - \frac{\gamma-1}{2} M_1^{\ 2}\left[\left(\frac{V_{a,2}}{V_{a,1}}\right)^2 \sec^2\theta - 1\right]\right\}^{\frac{1}{n-1}} \tag{B7}$$

When substituted in equation (B6), the axial-velocity ratio in terms of turning angle and inlet Mach number becomes

$$\frac{V_{a,2}}{V_{a,1}}\left\{1 - \frac{\gamma-1}{2} M_1^{\ 2}\left[\left(\frac{V_{a,2}}{V_{a,1}}\right)^2 \sec^2\theta - 1\right]\right\}^{\frac{1}{n-1}} = 1 \tag{B8}$$

Resultant force angle. - The angle between the resultant blade force and the normal to the cascade axis (fig. 1(c)) in compressible flow is given by

$$\beta_F = \tan^{-1}\frac{F_a}{F_\theta} \tag{B9}$$

Evaluating the force components from momentum considerations yields:

In the axial direction,

$$s(p_1-p_2) - F_a = -s\rho_1 V_{a,1}^{\ 2} + s\rho_1 V_{a,1} V_{a,2}$$

$$\frac{F_a}{p_1 s} = \left(1 - \frac{p_2}{p_1}\right) + \frac{\rho_1 V_1^{\ 2}}{p_1}\left(1 - \frac{V_{a,2}}{V_{a,1}}\right) \tag{B10}$$

In the tangential direction,

$$F_\theta = \rho_1 V_{a,1} s V_{\theta,2}$$

$$\frac{F_\theta}{p_1 s} = \frac{\rho_1 V_{a,1} V_{\theta,2}}{p_1} \tag{B11}$$

1408

Substituting equations (B10) and (B11) into equation (B9) and making use of the sonic relation give

$$\beta_F = \tan^{-1} \frac{1 - \frac{p_2}{p_1} - \gamma M_1^2 \left(\frac{V_{a,2}}{V_{a,1}} - 1\right)}{\gamma M_1^2 \left(\frac{V_{a,2}}{V_{a,1}}\right) \tan\theta} \tag{B12}$$

From equation (B7), the pressure ratio is obtained as

$$\frac{p_2}{p_1} = \left\{1 - \frac{\gamma-1}{2} M_1^2 \left[\left(\frac{V_{a,2}}{V_{a,1}}\right)^2 \sec^2\theta - 1\right]\right\}^{\frac{n}{n-1}}$$

Substituting this equation in equation (B12) yields

$$\beta_F = \tan^{-1} \frac{1 - \left\{1 - \frac{\gamma-1}{2} M_1^2 \left[\left(\frac{V_{a,2}}{V_{a,1}}\right)^2 \sec^2\theta - 1\right]\right\}^{\frac{n}{n-1}} - \gamma M_1^2 \left[\left(\frac{V_{a,2}}{V_{a,1}}\right) - 1\right]}{\gamma M_1^2 \left(\frac{V_{a,2}}{V_{a,1}}\right) \tan\theta} \tag{B13}$$

The lift angle β_L is then given by the sum of equation (B13) and the drag angle ϵ.

1408

From equations (B4), (B8), and (B13), it is seen that M_2, $V_{a,2}/V_{a,1}$, and β_L all depend on the magnitude of the compressible turning angle. The solution for the compressible turning angle given by equation (10) therefore could not be obtained directly, and a trial-and-error solution was made necessary. In order to facilitate the solution, general curves of M_2, $V_{a,2}/V_{a,1}$, and β_L against turning angle over a range of inlet Mach numbers were first computed. A value of drag-lift ratio equal to 0.07 corresponding to a drag angle of 4° and a polytropic efficiency of 0.95 were assumed in all calculations.

For a given value of inlet Mach number and incompressible turning angle, three values of compressible turning angle were first assumed. For each assumed value of θ, corresponding values of M_2, $V_{a,2}/V_{a,1}$, and β_L were obtained from the previously plotted general curves of equations (B4), (B8), and (B13). These values and the value of β_L^* obtained from equation (B1) were then substituted into equation (10), from which three corresponding values of θ were calculated. The solution was then obtained by plotting the values of the tangent of the assumed θ and the tangent of the calculated θ against assumed θ, and determining the value of $\tan \theta$ at the intersection of the two curves.

The solution for the lift coefficient ratio (equation (9)) was obtained directly for a given θ^* and M_1 by first determining the compressible θ corresponding to θ^* and M_1 and then evaluating the M_2 corresponding to M_1 and the compressible θ.

REFERENCES

1. Lieblein, Seymour: Turning-Angle Design Rules for Constant-Thickness Circular-Arc Inlet Guide Vanes in Axial Annular Flow. NACA TN 2179, 1950.

2. Zimney, Charles M., and Lappi, Viola M.: Data for Design of Entrance Vanes from Two-Dimensional Tests of Airfoils in Cascade. NACA ACR L5G18, 1945.

3. Eckert, B.: Supercharger for Aviation Engine FKFS 9-900VI (D Engine). Part II - Design of Supercharger for Engine 9-900VI (D Engine). Trans. by Gen. Elec. Co. (Vol. 16 of series of articles on compressor and fan design, coordinated by Code 338, BuShips, Navy Dept. (Washington, D.C.), May 1946.)

4. Spurr, Robert A., and Allen, H. Julian: A Theory of Unstaggered Airfoil Cascades in Compressible Flow. NACA RM A7E29, 1947.

5. Glauert, H.: The Effect of Compressibility on the Lift of an Aerofoil. R. & M. No. 1135, British A.R.C., Sept. 1927.

6. Bogdonoff, Seymour, and Bogdonoff, Harriet E.: Blade Design Data for Axial-Flow Fans and Compressors. NACA ACR L5F07a, 1945.

7. von Kármán, Th.: Compressibility Effects in Aerodynamics. Jour. Aero. Sci., vol. 8, no. 9, July 1941, pp. 337-356.

8. Tsien, Hsue-Shen, and Lees, Lester: The Glauert-Prandtl Approximation for Subsonic Flows of a Compressible Fluid. Jour. Aero. Sci., vol. 12, no. 2, April 1945, pp. 173-187, 202.

9. Wislicenus, George F.: Fluid Mechanics of Turbomachinery. McGraw-Hill Book Co., Inc., 1947, p. 232.

1408

TABLE I - BLADE DESIGN AND ANNULUS DATA

[See figs. 1 and 6 for notation]

Blade design	Mean line	Thickness distribution	Average maximum-thickness ratio (percent chord)	Radius at tip r_t (in.)	Radius at hub inlet $r_{h,1}$ (in.)	Radius at hub outlet $r_{h,2}$ (in.)	Chord, c (in.)		Design turning angle, θ (deg)		Location of measuring station, d (in.)	Range of solidity of data points	Range of axial velocity ratio $V_{a,2}/V_{a,1}$
							Tip	Hub	Tip	Hub			
A[a]	65-series	Variable	10.00	6.63	5.10	5.10	1.75	1.75	0	23.9	0.92	1.22-1.40	1.06-1.12
B	Circular arc	Constant	3.12	8.00	6.00	6.00	2.19	1.65	0	25.2	0.30	1.00	1.04-1.21
C	Circular arc	Constant	3.70	7.00	3.64	4.07	2.00	1.23	26.8	12.1	0.25	1.60	1.01-1.12
D	65-series	Constant	1.75	12.00	9.00	9.00	3.93	2.95	6.0	33.4	0.75	1.20	0.94-1.04
E	65-series	Constant	2.76	8.00	6.00	6.00	2.00	2.34	12.0	15.2	0.30	1.17	---------

[a]Design data obtained from Fredric Flader, Inc.

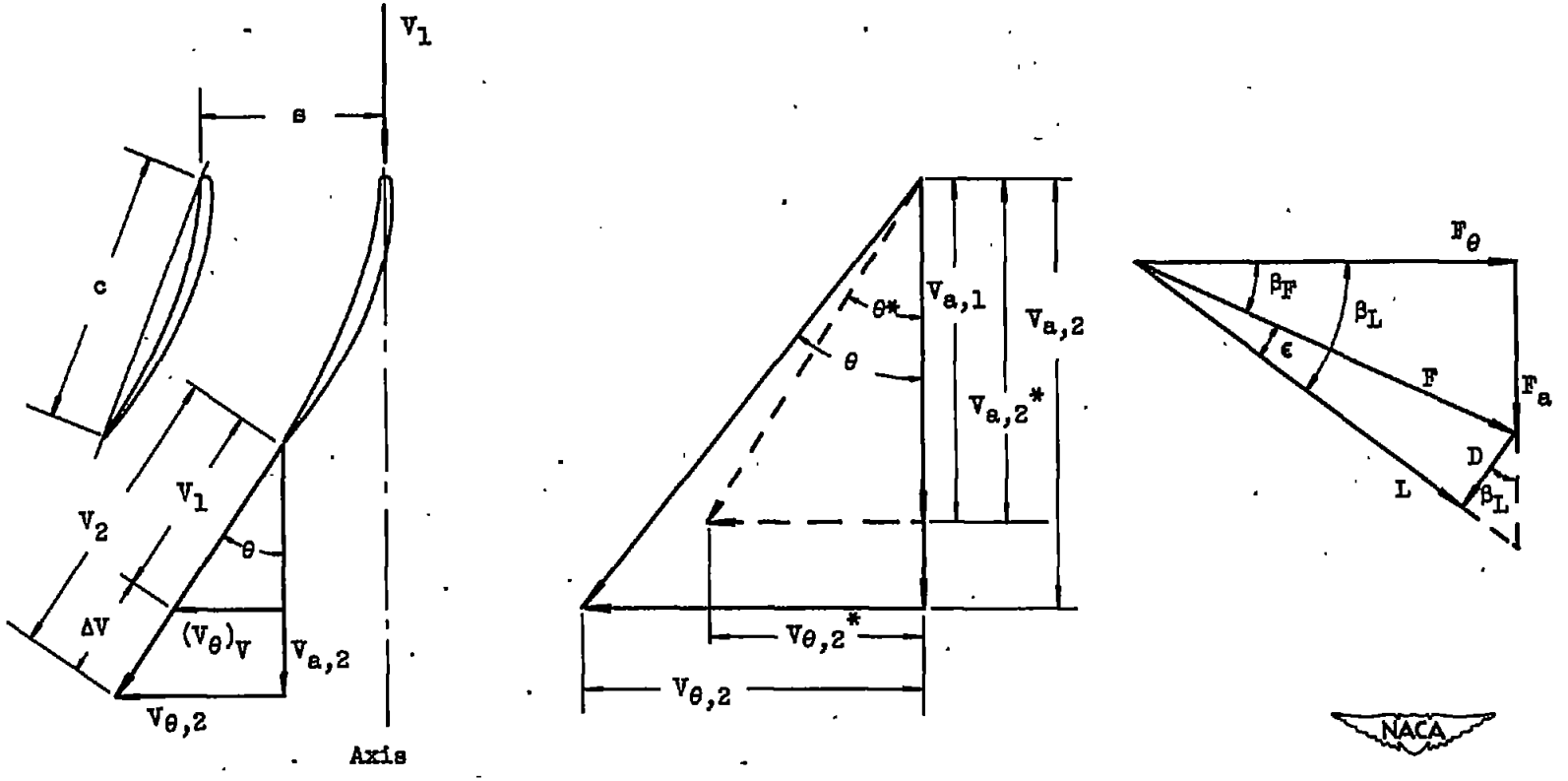

(a) Blade diagram. (b) Velocity diagram. (c) Force diagram.

Figure 1. - Blade, velocity, and force diagrams for two-dimensional flow across cascade vanes with axial air inlet (accelerating flow).

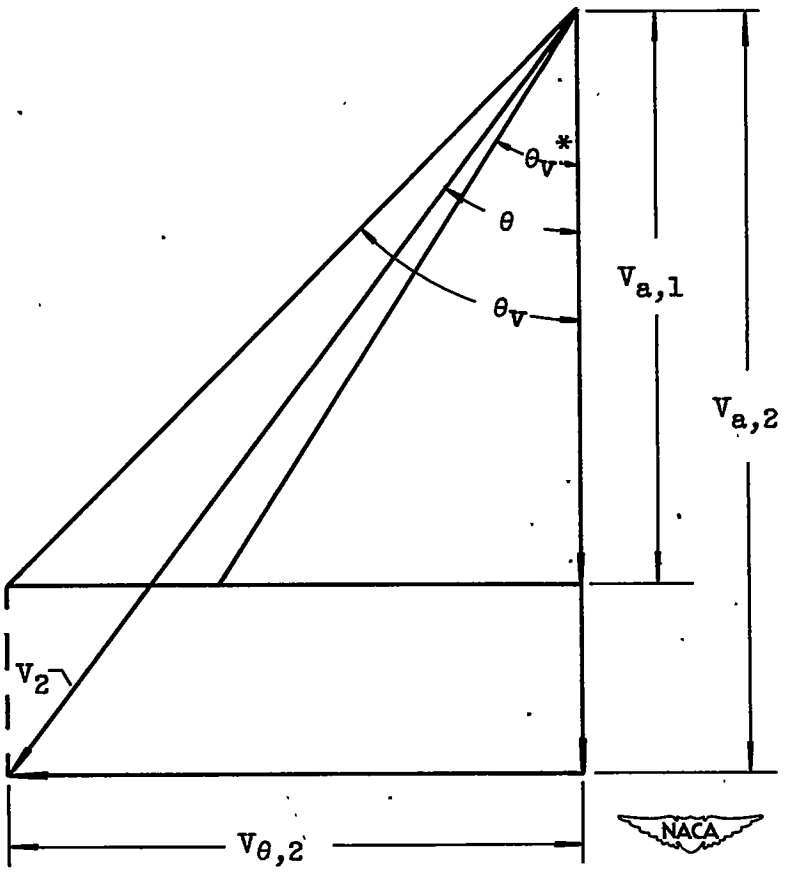

Figure 2. - Compressible-flow velocity diagram for determination of turning angles of inlet-guide-vane sections.

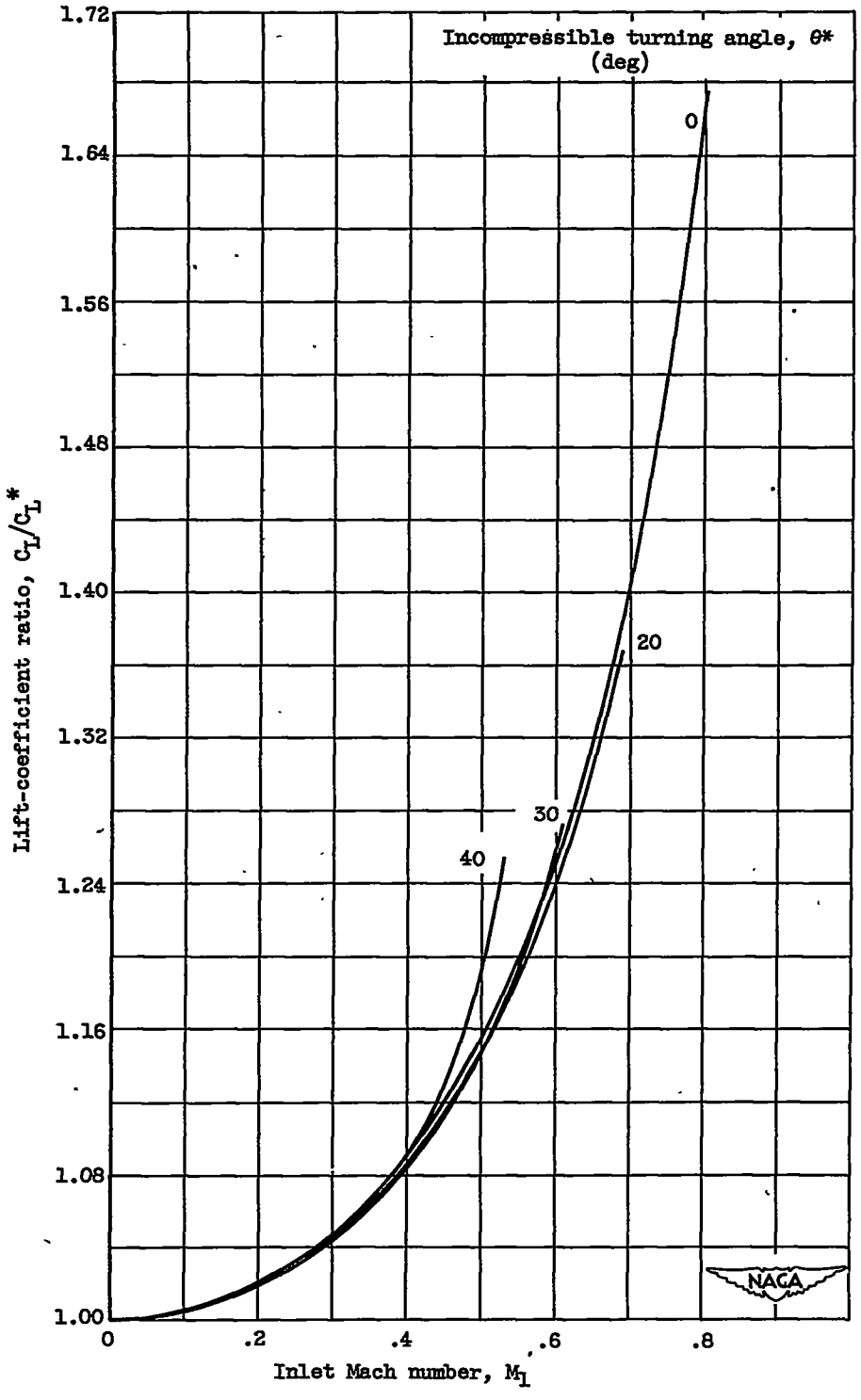

Figure 3. - Variation of ratio of compressible to incompressible lift coefficient with inlet Mach number for two-dimensional cascade flow. Curve for $\theta^* = 0$ indicates limiting ratio as lift coefficient approaches zero.

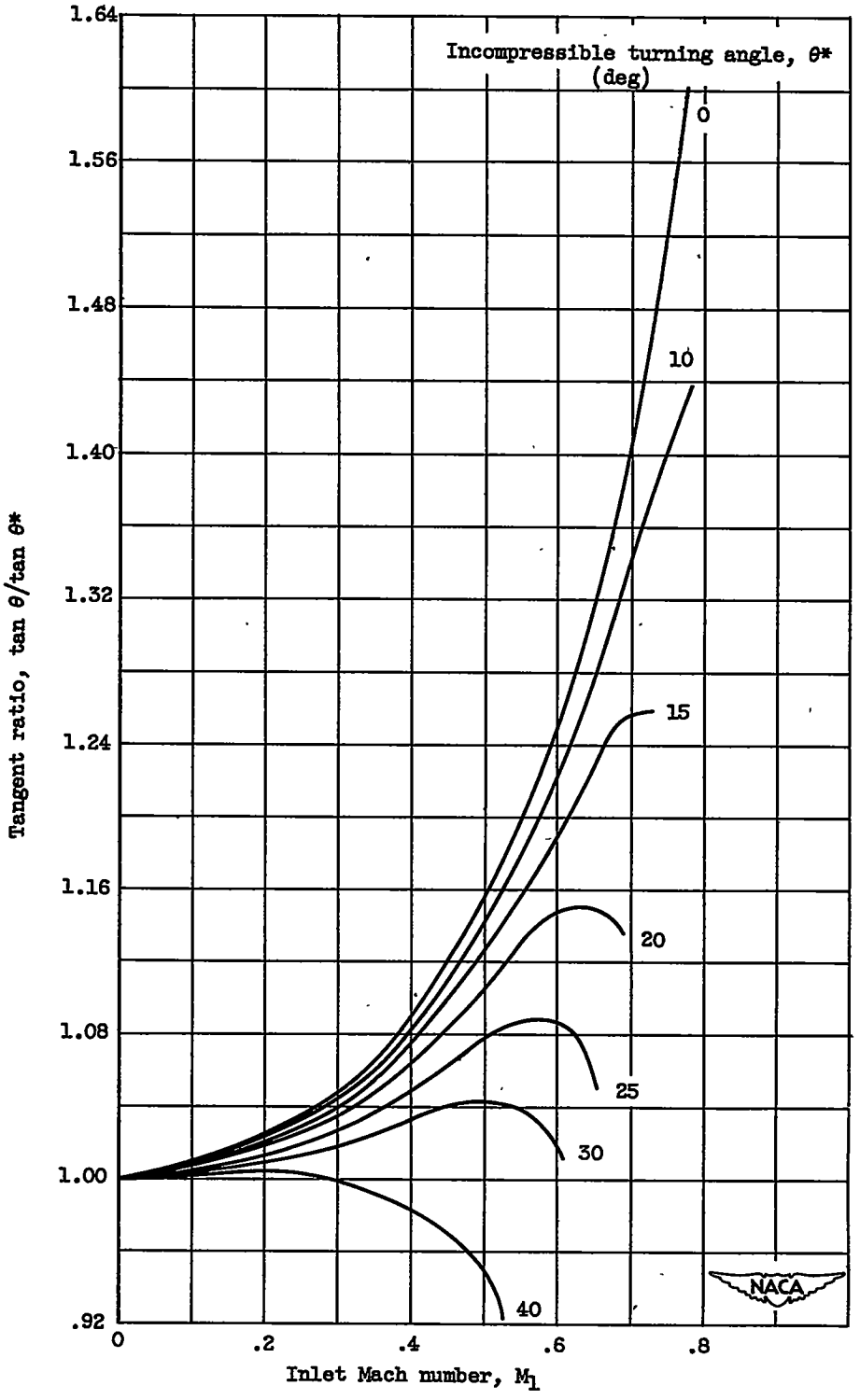

Figure 4. - Variation of ratio of tangent of compressible and incompressible turning angle with inlet Mach number for two-dimensional cascade flow. Curve for $\theta^* = 0$ indicates limiting ratio as incompressible turning angle approaches 0°.

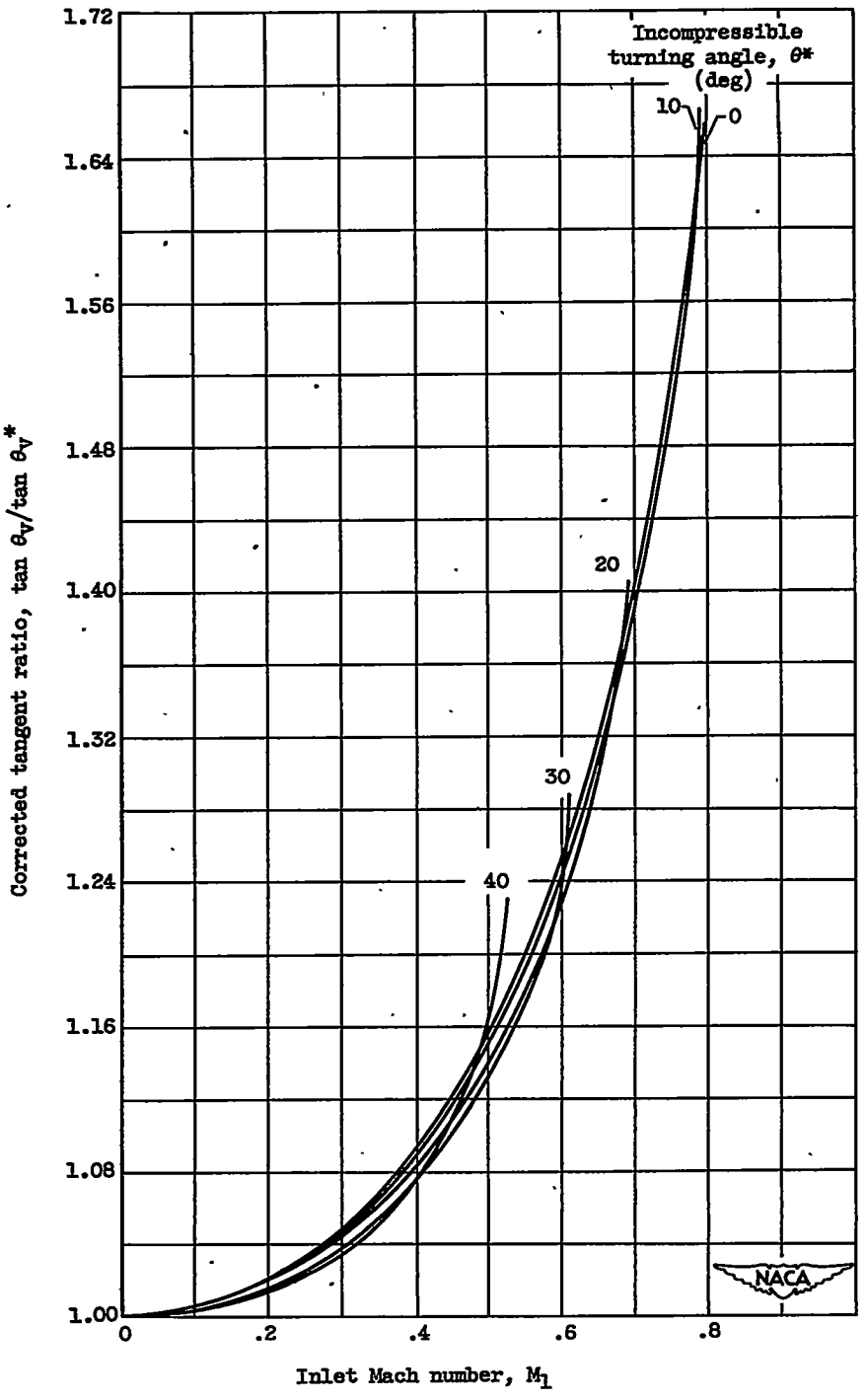

Figure 5. - Variation of ratio of tangent of compressible and incompressible turning angle with inlet Mach number. Two-dimensional turning angles corrected to constant axial velocity. Curves for $\theta^* = 0$ indicates limiting ratio as incompressible turning angle approaches 0°.

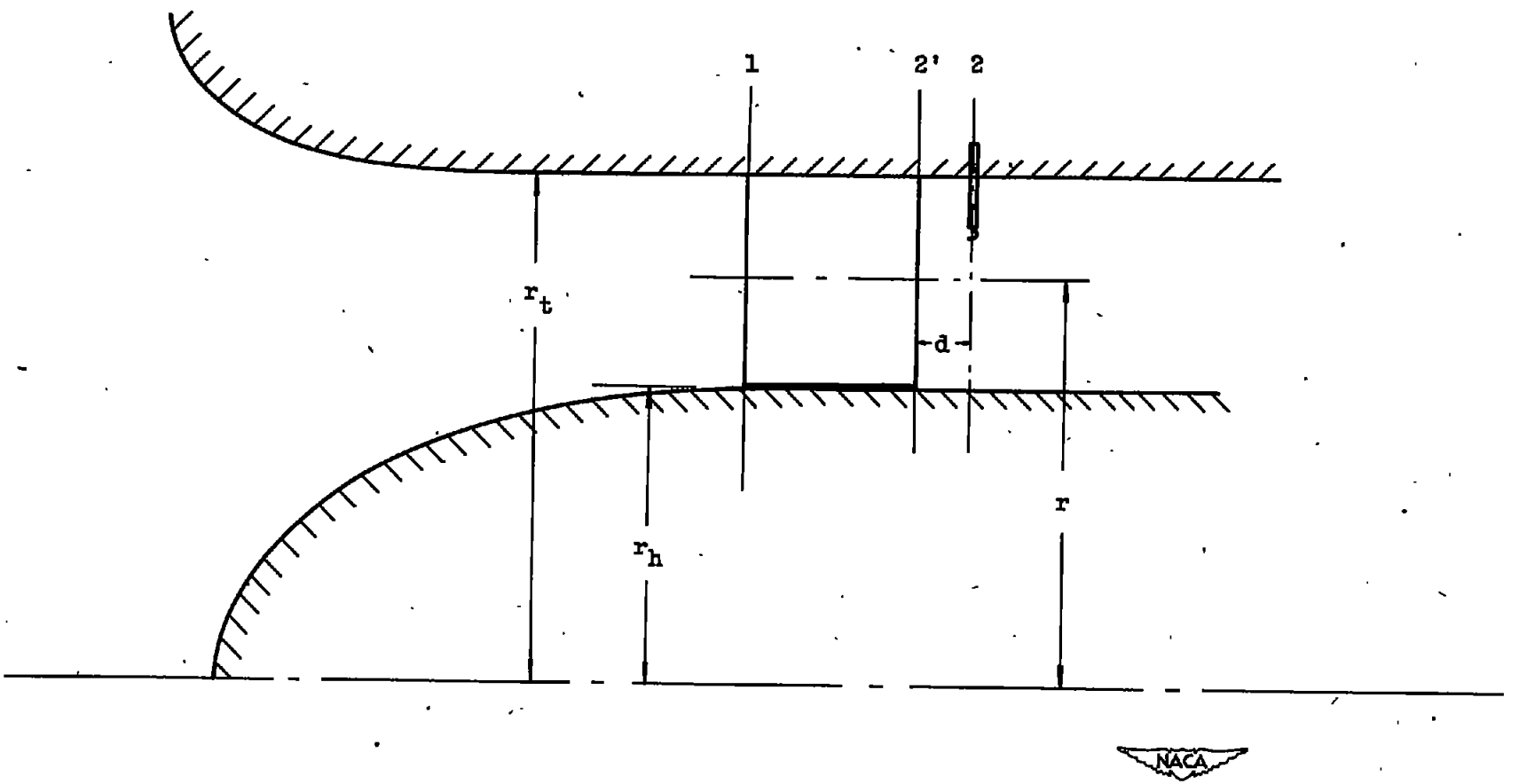

Figure 6. - Schematic diagram of typical inlet-guide-vane annular-cascade setup.

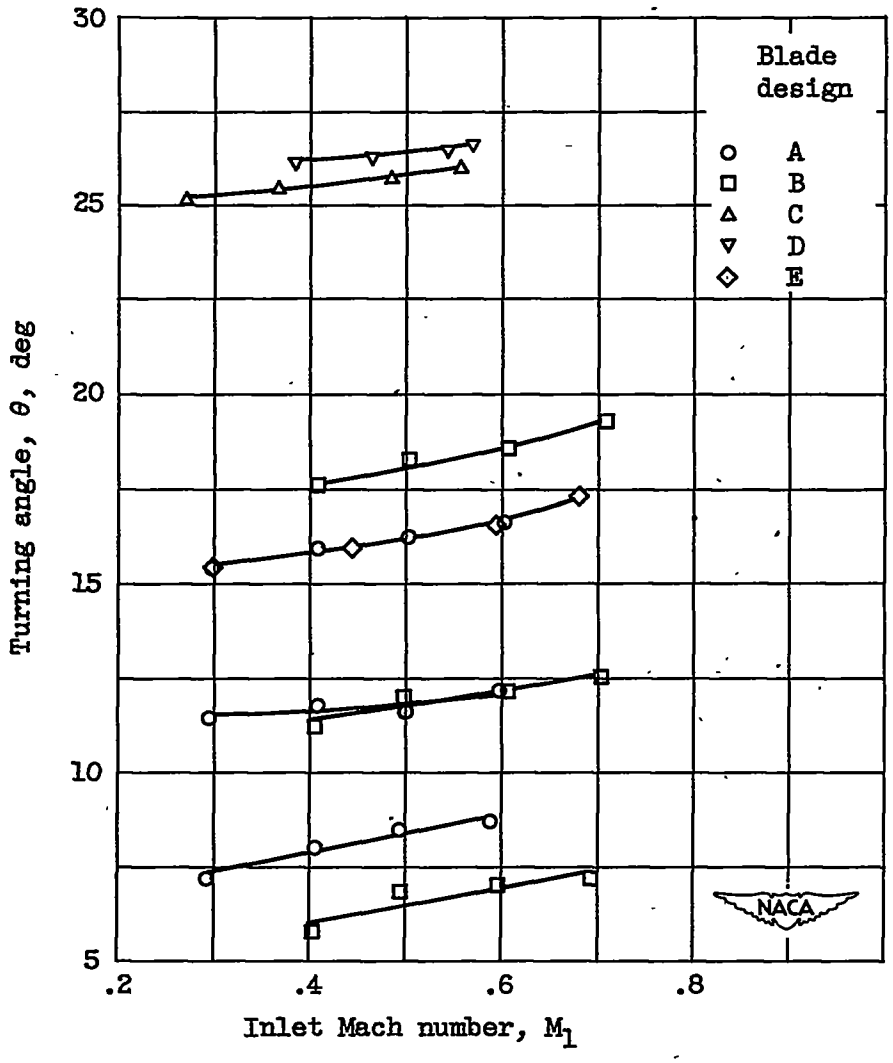

Figure 7. - Experimental variation of uncorrected turning angle with inlet Mach number at fixed radial station for several axial-flow-compressor inlet-guide-vane designs in annular cascade.

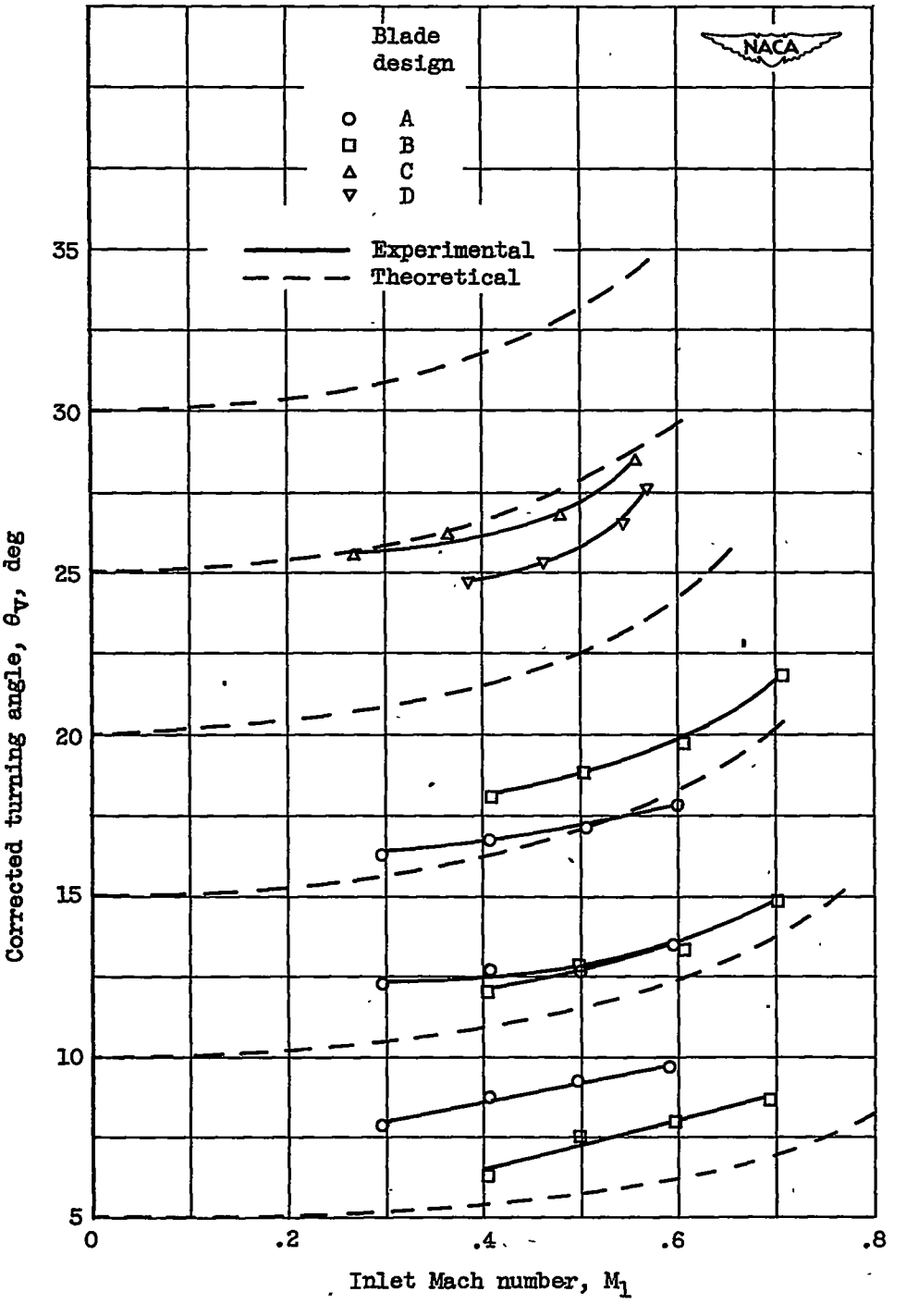

Figure 8. - Comparison of compressibility variation of corrected turning angles obtained from two-dimensional flow with experimental corrected turning angles obtained from inlet guide vanes in annular cascade. All angles corrected to constant axial velocity based on inlet axial velocity and assumption of constant circulation.

NACA-Langley - 12-28-50 - 1125