M M Mikulas Jr.

NATIONAL ADVISORY COMMITTEE FOR AERONAUTICS

REPORT 1008

A SMALL-DEFLECTION THEORY FOR CURVED SANDWICH PLATES

By MANUEL STEIN and J. MAYERS

1951

For sale by the Superintendent of Documents, U. S. Government Printing Office, Washington 25, D. C. Yearly subscription, $4.00; foreign, $5.25; single copy price varies according to size - - - - - - - - - - Price 15 cents

AERONAUTIC SYMBOLS

1. FUNDAMENTAL AND DERIVED UNITS

	Symbol	Metric		English	
		Unit	Abbreviation	Unit	Abbreviation
Length	l	meter	m	foot (or mile)	ft (or mi)
Time	t	second	s	second (or hour)	sec (or hr)
Force	F	weight of 1 kilogram	kg	weight of 1 pound	lb
Power	P	horsepower (metric)		horsepower	hp
Speed	V	kilometers per hour	kph	miles per hour	mph
		meters per second	mps	feet per second	fps

2. GENERAL SYMBOLS

W Weight$=mg$

g Standard acceleration of gravity$=9.80665$ m/s^2 or 32.1740 ft/sec^2

m Mass$=\frac{W}{g}$

I Moment of inertia$=mk^2$. (Indicate axis of radius of gyration k by proper subscript.)

μ Coefficient of viscosity

ν Kinematic viscosity

ρ Density (mass per unit volume)

Standard density of dry air, 0.12497 kg-m^{-4}-s^2 at 15° C and 760 mm; or 0.002378 lb-ft^{-4} sec^2

Specific weight of "standard" air, 1.2255 kg/m^3 or 0.07651 lb/cu ft

3. AERODYNAMIC SYMBOLS

S Area

S_w Area of wing

G Gap

b Span

c Chord

A Aspect ratio, $\frac{b^2}{S}$

V True air speed

q Dynamic pressure, $\frac{1}{2}\rho V^2$

L Lift, absolute coefficient $C_L=\frac{L}{qS}$

D Drag, absolute coefficient $C_D=\frac{D}{qS}$

D_0 Profile drag, absolute coefficient $C_{D_0}=\frac{D_0}{qS}$

D_i Induced drag, absolute coefficient $C_{D_i}=\frac{D_i}{qS}$

D_p Parasite drag, absolute coefficient $C_{D_p}=\frac{D_p}{qS}$

C Cross-wind force, absolute coefficient $C_C=\frac{C}{qS}$

i_w Angle of setting of wings (relative to thrust line)

i_t Angle of stabilizer setting (relative to thrust line)

Q Resultant moment

Ω Resultant angular velocity

R Reynolds number, $\rho\frac{Vl}{\mu}$ where l is a linear dimension (e.g., for an airfoil of 1.0 ft chord, 100 mph, standard pressure at 15° C, the corresponding Reynolds number is 935,400; or for an airfoil of 1.0 m chord, 100 mps, the corresponding Reynolds number is 6,865,000)

α Angle of attack

ϵ Angle of downwash

α_0 Angle of attack, infinite aspect ratio

α_i Angle of attack, induced

α_a Angle of attack, absolute (measured from zero-lift position)

γ Flight-path angle

REPORT 1008

A SMALL-DEFLECTION THEORY FOR CURVED SANDWICH PLATES

By MANUEL STEIN and J. MAYERS

Langley Aeronautical Laboratory
Langley Field, Va.

National Advisory Committee for Aeronautics

Headquarters, 1724 F Street NW., Washington 25, D. C.

Created by act of Congress approved March 3, 1915, for the supervision and direction of the scientific study of the problems of flight (U. S. Code, title 50, sec. 151). Its membership was increased from 12 to 15 by act approved March 2, 1929, and to 17 by act approved May 25, 1948. The members are appointed by the President, and serve as such without compensation.

JEROME C. HUNSAKER, Sc. D., Massachusetts Institute of Technology, *Chairman*

ALEXANDER WETMORE, Sc. D., Secretary, Smithsonian Institution, *Vice Chairman*

DETLEV W. BRONK, PH. D., President, Johns Hopkins University.

JOHN H. CASSADY, Vice Admiral, United States Navy, Deputy Chief of Naval Operations.

EDWARD U. CONDON, PH. D., Director, National Bureau of Standards.

HON. THOMAS W. S. DAVIS, Assistant Secretary of Commerce.

JAMES H. DOOLITTLE, Sc. D., Vice President, Shell Union Oil Corp.

R. M. HAZEN, B. S., Director of Engineering, Allison Division, General Motors Corp.

WILLIAM LITTLEWOOD, M. E., Vice President, Engineering, American Airlines, Inc.

THEODORE C. LONNQUEST, Rear Admiral, United States Navy, Deputy and Assistant Chief of the Bureau of Aeronautics.

DONALD L. PUTT, Major General, United States Air Force, Director of Research and Development, Office of the Chief of Staff, Development.

ARTHUR E. RAYMOND, Sc. D., Vice President, Engineering, Douglas Aircraft Co., Inc.

FRANCIS W. REICHELDERFER, Sc. D., Chief, United States Weather Bureau.

HON. DELOS W. RENTZEL, Administrator of Civil Aeronautics, Department of Commerce.

GORDON P. SAVILLE, Major General, United States Air Force, Deputy Chief of Staff—Development.

WILLIAM WEBSTER, M. S., Chairman, Research and Development Board, Department of Defense.

THEODORE P. WRIGHT, Sc. D., Vice President for Research, Cornell University.

HUGH L. DRYDEN, PH. D., *Director*

JOHN W. CROWLEY, JR., B. S., *Associate Director for Research*

JOHN F. VICTORY, LL. D., *Executive Secretary*

E. H. CHAMBERLIN, *Executive Officer*

HENRY J. E. REID, D. Eng., Director, Langley Aeronautical Laboratory, Langley Field, Va.

SMITH J. DEFRANCE, B. S., Director, Ames Aeronautical Laboratory, Moffett Field, Calif.

EDWARD R. SHARP, Sc. D., Director, Lewis Flight Propulsion Laboratory, Cleveland Airport, Cleveland, Ohio

---

TECHNICAL COMMITTEES

AERODYNAMICS
POWER PLANTS FOR AIRCRAFT
AIRCRAFT CONSTRUCTION
OPERATING PROBLEMS
INDUSTRY CONSULTING

Coordination of Research Needs of Military and Civil Aviation
Preparation of Research Programs
Allocation of Problems
Prevention of Duplication
Consideration of Inventions

LANGLEY AERONAUTICAL LABORATORY, Langley Field, Va.

LEWIS FLIGHT PROPULSION LABORATORY, Cleveland Airport, Cleveland, Ohio

AMES AERONAUTICAL LABORATORY, Moffett Field, Calif.

Conduct, under unified control, for all agencies, of scientific research on the fundamental problems of flight

---

OFFICE OF AERONAUTICAL INTELLIGENCE,
Washington, D. C.

Collection, classification, compilation, and dissemination of scientific and technical information on aeronautics

REPORT 1008

A SMALL-DEFLECTION THEORY FOR CURVED SANDWICH PLATES [1]

By Manuel Stein and J. Mayers

SUMMARY

A small-deflection theory that takes into account deformations due to transverse shear is presented for the elastic-behavior analysis of orthotropic plates of constant cylindrical curvature with considerations of buckling included. The theory is applicable primarily to sandwich construction.

INTRODUCTION

The usual sandwich plate as used in aircraft construction consists of a light-weight, low-stiffness core material bonded or riveted between two high-stiffness cover sheets. The elastic behavior of such plates under loading cannot be analyzed by conventional plate and shell theories in general since these theories neglect deformations due to transverse shear, an effect which may be of great importance in sandwich construction.

Many authors have considered transverse shear deflections in analyzing the elastic behavior of flat sandwich plates by means of small-deflection theories (see, for example, references 1 to 4). Most of this work has been concerned with sandwich plates of the isotropic type (for example, Metalite, cellular-cellulose-acetate core). In reference 3, however, sandwich plates of the orthotropic type are also considered (for example, corrugated core).

The treatment of curved sandwich plates in the literature has not been as general as that accorded flat sandwich plates, although several specific studies of the curved isotropic sandwich plate have been published. These studies have covered (a) simply supported, slightly curved isotropic sandwich plates under compressive end loading (reference 1), (b) axially symmetric buckling of a simply supported isotropic sandwich cylinder in compression (reference 1), and (c) a nonbuckling small-deflection theory for isotropic sandwich shells which takes into account not only deflections due to shear but also the effects of core compression normal to the faces (reference 5).

The need for a general theory for curved sandwich plates which is applicable to orthotropic as well as isotropic types and which includes both nonbuckling and buckling effects has led to the development of the theory presented in this report. This theory, which takes into account deflections due to transverse shear, covers those types of sandwich plates having constant cylindrical curvature, similar properties on the average above and below the middle surface, and essentially constant core thickness.

SYMBOLS

D_s	flexural stiffness of isotropic sandwich plate, inch-pounds $\left(\frac{E_s t_s h^2}{2(1-\mu^2)}\right)$
D	flexural stiffness of ordinary plate, inch-pounds $\left(\frac{Et^3}{12(1-\mu^2)}\right)$
D_x, D_y	flexural stiffnesses of orthotropic plate in axial and circumferential directions, inch-pounds
D_{xy}	twisting stiffness of orthotropic plate in xy-plane, inch-pounds
D_{Q_x}, D_{Q_y}	transverse shear stiffnesses of orthotropic plate in axial and circumferential directions, pounds per inch
D_Q	transverse shear stiffness of isotropic sandwich plate, pounds per inch
E	Young's modulus for ordinary plate, pounds per square inch
E_s	Young's modulus for faces of isotropic sandwich plate, pounds per square inch
E_x, E_y	extensional stiffness of orthotropic plate in axial and circumferential directions, pounds per inch
G_{xy}	shear stiffness of orthotropic plate in xy-plane, pounds per inch
$L_E, L_E^{-1}, L_D, \nabla^2, \nabla^4, \nabla^{-4}$	mathematical operators defined in section entitled "Theoretical Derivations"
M_x, M_y	bending moments on plate cross sections perpendicular to x- and y-axes, respectively, inch-pounds per inch
M_{xy}	twisting moments on cross sections perpendicular to x- and y-axes, inch-pounds per inch
N_x, N_y	resultant normal forces in x- and y-directions, pounds per inch
N_{xy}	resultant shearing force in xy-plane, pounds per inch
q	lateral loading, pounds per square inch

[1] Supersedes NACA TN 2017, "A Small-Deflection Theory for Curved Sandwich Plates" by Manuel Stein and J. Mayers, 1950.

Q_x, Q_y	resultant shearing forces in yz-plane and xz-plane, respectively, pounds per inch
h	depth of isotropic sandwich plate measured between middle surfaces of faces, inches
r	constant radius of curvature of plate, inches
t	thickness of ordinary plate, inches
t_s	thickness of face of isotropic sandwich plate, inches
u, v, w	displacements in x-, y-, z-directions, respectively, of a point in middle surface of plate, inches
x, y, z	rectangular coordinates
γ_{xy}	shear strain in xy-plane
ϵ_x, ϵ_y	normal strains in axial and circumferential directions
μ	Poisson's ratio for ordinary plate
μ_x, μ_y	Poisson's ratios for orthotropic plate, defined in terms of curvatures
μ'_x, μ'_y	Poisson's ratios for orthotropic plate, defined in terms of normal strains

THEORETICAL DERIVATIONS

GENERAL THEORY

In developing the equations of equilibrium for the orthotropic curved plate element, shown in figure 1, the basic assumptions made are that the materials are elastic, that the deflections are small compared with the plate thickness, and that the thickness is small compared with the radius of curvature. The last assumption implies that the shear forces N_{xy} and N_{yx} are equal and that the twisting moments M_{xy} and M_{yx} are equal.

Eleven basic equations.—As in ordinary curved-plate theory, 11 equations exist for orthotropic curved plates (considering deflections due to shear) from which the displacements acting in the plate can be determined. The 11 equations consist of 5 equilibrium equations, 3 equations relating resultant forces to strains, and 3 equations relating resultant moments with curvatures and twist.

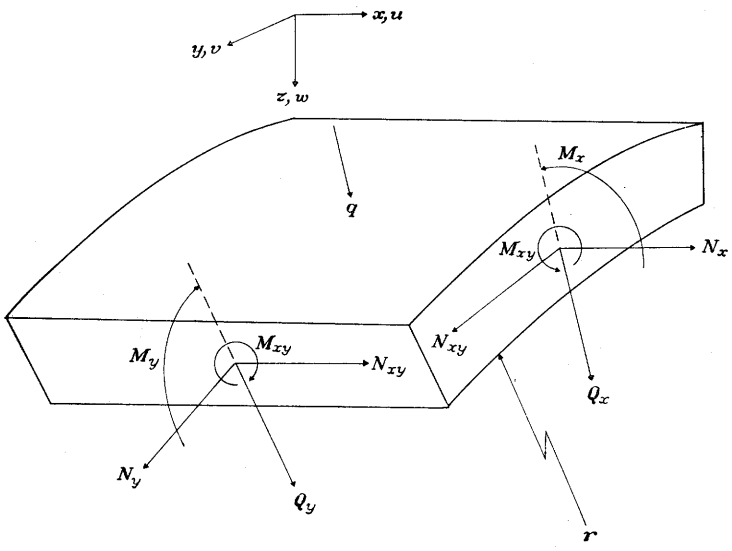

FIGURE 1.—Forces and moments acting on curved plate element.

The first five equations, expressing force equilibrium in the x- and y-directions, moment equilibrium about the x- and y-axes, and force equilibrium in the z-direction, are

$$\frac{\partial N_x}{\partial x}+\frac{\partial N_{xy}}{\partial y}=0 \tag{1a}$$

$$\frac{\partial N_y}{\partial y}+\frac{\partial N_{xy}}{\partial x}=0 \tag{1b}$$

$$Q_x-\frac{\partial M_x}{\partial x}+\frac{\partial M_{xy}}{\partial y}=0 \tag{1c}$$

$$Q_y-\frac{\partial M_y}{\partial y}+\frac{\partial M_{xy}}{\partial x}=0 \tag{1d}$$

$$\frac{\partial Q_x}{\partial x}+\frac{\partial Q_y}{\partial y}+N_x\frac{\partial^2 w}{\partial x^2}+N_y\left(\frac{1}{r}+\frac{\partial^2 w}{\partial y^2}\right)+2N_{xy}\frac{\partial^2 w}{\partial x\,\partial y}+q=0 \tag{1e}$$

It should be noted that in these equations, higher-order terms have been neglected in accordance with considerations similar to those of reference 6.

For the orthotropic curved plate, the relations between the resultant middle-surface forces and the middle-surface strains are (see appendix)

$$N_x=\frac{E_x}{1-\mu'_x\mu'_y}\left[\frac{\partial u}{\partial x}+\mu'_y\left(\frac{\partial v}{\partial y}-\frac{w}{r}\right)\right] \tag{2a}$$

$$N_y=\frac{E_y}{1-\mu'_x\mu'_y}\left(\frac{\partial v}{\partial y}-\frac{w}{r}+\mu'_x\frac{\partial u}{\partial x}\right) \tag{2b}$$

$$N_{xy}=G_{xy}\left(\frac{\partial v}{\partial x}+\frac{\partial u}{\partial y}\right) \tag{2c}$$

From reference 3, the corresponding relations between resultant moments and curvatures and twist are

$$M_x=-\frac{D_x}{1-\mu_x\mu_y}\left[\frac{\partial^2 w}{\partial x^2}-\frac{1}{D_{Q_x}}\frac{\partial Q_x}{\partial x}+\mu_y\left(\frac{\partial^2 w}{\partial y^2}-\frac{1}{D_{Q_y}}\frac{\partial Q_y}{\partial y}\right)\right] \tag{3a}$$

$$M_y=-\frac{D_y}{1-\mu_x\mu_y}\left[\frac{\partial^2 w}{\partial y^2}-\frac{1}{D_{Q_y}}\frac{\partial Q_y}{\partial y}+\mu_x\left(\frac{\partial^2 w}{\partial x^2}-\frac{1}{D_{Q_x}}\frac{\partial Q_x}{\partial x}\right)\right] \tag{3b}$$

$$M_{xy}=\frac{1}{2}D_{xy}\left(2\frac{\partial^2 w}{\partial x\,\partial y}-\frac{1}{D_{Q_y}}\frac{\partial Q_y}{\partial x}-\frac{1}{D_{Q_x}}\frac{\partial Q_x}{\partial y}\right) \tag{3c}$$

Equations (1), (2), and (3) are the 11 basic equations necessary for determining the forces, moments, and deflections acting in the plate. The number of equations can be reduced to five, however, by substituting equations (2) and (3) into equations (1). In this manner, five differential equations are obtained for determining the resultant transverse shear forces Q_x and Q_y and the displacements u, v, and w.

The 11 basic equations presented are not restricted to deflection problems alone but may be applied to buckling problems as well by considering the changes that occur during buckling and modifying equations (1) accordingly. For equilibrium of the curved plate element after buckling, equations (1) can be written with N_x, N_{xy}, N_y, Q_x, Q_y, M_x, M_{xy}, M_y, and w replaced by $N_{x_0}+N_{x_1}$, $N_{xy_0}+N_{xy_1}$, $\cdots$, w_0+w_1, respectively, where the subscript 0 refers to values prior to buckling and the subscript 1 refers to changes in these values that occur during buckling. For equilibrium of the curved plate element prior to buckling the following equations apply:

$$\frac{\partial N_{x_0}}{\partial x}+\frac{\partial N_{xy_0}}{\partial y}=0$$

$$\frac{\partial N_{y_0}}{\partial y}+\frac{\partial N_{xy_0}}{\partial x}=0$$

$$Q_{x_0}-\frac{\partial M_{x_0}}{\partial x}+\frac{\partial M_{xy_0}}{\partial y}=0$$

$$Q_{y_0}-\frac{\partial M_{y_0}}{\partial y}+\frac{\partial M_{xy_0}}{\partial x}=0$$

$$\frac{\partial Q_{x_0}}{\partial x}+\frac{\partial Q_{y_0}}{\partial y}+N_{x_0}\frac{\partial^2 w_0}{\partial x^2}+N_{y_0}\left(\frac{1}{r}+\frac{\partial^2 w_0}{\partial y^2}\right)+2N_{xy_0}\frac{\partial^2 w_0}{\partial x\,\partial y}+q=0$$

Subtracting the previous equations from equations (1) (as modified) gives the following equilibrium equations which apply to buckling problems:

$$\frac{\partial N_{x_1}}{\partial x}+\frac{\partial N_{xy_1}}{\partial y}=0 \tag{4a}$$

$$\frac{\partial N_{y_1}}{\partial y}+\frac{\partial N_{xy_1}}{\partial x}=0 \tag{4b}$$

$$Q_{x_1}-\frac{\partial M_{x_1}}{\partial x}+\frac{\partial M_{xy_1}}{\partial y}=0 \tag{4c}$$

$$Q_{y_1}-\frac{\partial M_{y_1}}{\partial y}+\frac{\partial M_{xy_1}}{\partial x}=0 \tag{4d}$$

$$\frac{\partial Q_{x_1}}{\partial x}+\frac{\partial Q_{y_1}}{\partial y}+N_{x_0}\frac{\partial^2 w_1}{\partial x^2}+N_{x_1}\frac{\partial^2(w_0+w_1)}{\partial x^2}+N_{y_0}\frac{\partial^2 w_1}{\partial y^2}+$$
$$N_{y_1}\left[\frac{1}{r}+\frac{\partial^2(w_0+w_1)}{\partial y^2}\right]+2N_{xy_0}\frac{\partial^2 w_1}{\partial x\,\partial y}+2N_{xy_1}\frac{\partial^2(w_0+w_1)}{\partial x\,\partial y}=0 \tag{4e}$$

In equation (4e) the terms $N_{x_1}\frac{\partial^2 w_1}{\partial x^2}$, $N_{y_1}\frac{\partial^2 w_1}{\partial y^2}$, and $N_{xy_1}\frac{\partial^2 w_1}{\partial x\,\partial y}$ may be neglected since they will be small compared with $N_{x_0}\frac{\partial^2 w_1}{\partial x^2}$, $N_{y_0}\frac{\partial^2 w_1}{\partial y^2}$, and $N_{xy_0}\frac{\partial^2 w_1}{\partial x\,\partial y}$. Also, if the deflection prior to buckling is zero or constant as occurs for many problems (for example, axial compression, hydrostatic pressure), all derivatives of w_0 vanish. For this type of problem equation (4e) becomes

$$\frac{\partial Q_{x_1}}{\partial x}+\frac{\partial Q_{y_1}}{\partial y}+N_{x_0}\frac{\partial^2 w_1}{\partial x^2}+N_{y_0}\frac{\partial^2 w_1}{\partial y^2}+\frac{N_{y_1}}{r}+2N_{xy_0}\frac{\partial^2 w_1}{\partial x\,\partial y}=0 \tag{4e'}$$

The six equations relating changes in middle-surface resultant forces with buckling strains and changes in moment with buckling distortions are identical with equations (2) and (3) with the subscript 1 added to N_x, N_{xy}, N_y, Q_x, Q_y, M_x, M_{xy}, M_y, u, v, and w.

The 11 equations, given by equations (4) and equations (2) and (3) (with subscript 1), apply to buckling problems in general (with equation (4e) or (4e′) as required) and can be used to obtain the critical values of the loads acting on the plate. As is shown in the next section, however, for the case in which the deflection prior to buckling is zero or constant, the 11 equations can be suitably combined to yield 3 equations in w_1, Q_{x_1}, and Q_{y_1}, a form convenient for application to plates of sandwich construction.

Reduction to three equations for buckling problems in which the deflection prior to buckling is zero or constant.—The reduction of the 11 equations to 3 equations in w_1, Q_{x_1}, and Q_{y_1} is achieved in several steps as follows:

By differentiating equation (4c) with respect to x, equation (4d) with respect to y, and adding the results to obtain the relationship

$$\frac{\partial Q_{x_1}}{\partial x}+\frac{\partial Q_{y_1}}{\partial y}=\frac{\partial^2 M_{x_1}}{\partial x^2}-2\frac{\partial^2 M_{xy_1}}{\partial x\,\partial y}+\frac{\partial^2 M_{y_1}}{\partial y^2}$$

equation (4e′) may be rewritten as

$$\frac{\partial^2 M_{x_1}}{\partial x^2}-2\frac{\partial^2 M_{xy_1}}{\partial x\,\partial y}+\frac{\partial^2 M_{y_1}}{\partial y^2}+\frac{N_{y_1}}{r}+N_{x_0}\frac{\partial^2 w_1}{\partial x^2}+$$
$$N_{y_0}\frac{\partial^2 w_1}{\partial y^2}+2N_{xy_0}\frac{\partial^2 w_1}{\partial x\,\partial y}=0 \tag{4e''}$$

Next, equations (2) and (3) (with subscript 1) are substituted into the equilibrium equations (4a) to (4d) and (4e″) to give

$$\frac{\partial^2 u_1}{\partial x^2}+\mu'_y\frac{\partial^2 v_1}{\partial x\,\partial y}-\frac{\mu'_y}{r}\frac{\partial w_1}{\partial x}+(1-\mu'_x\mu'_y)\frac{G_{xy}}{E_x}\left(\frac{\partial^2 u_1}{\partial y^2}+\frac{\partial^2 v_1}{\partial x\,\partial y}\right)=0 \tag{5}$$

$$\frac{\partial^2 v_1}{\partial y^2}-\frac{1}{r}\frac{\partial w_1}{\partial y}+\mu'_x\frac{\partial^2 u_1}{\partial x\,\partial y}+(1-\mu'_x\mu'_y)\frac{G_{xy}}{E_y}\left(\frac{\partial^2 v_1}{\partial x^2}+\frac{\partial^2 u_1}{\partial x\,\partial y}\right)=0 \tag{6}$$

$$Q_{x_1}+\frac{D_x}{1-\mu_x\mu_y}\left(\frac{\partial^3 w_1}{\partial x^3}-\frac{1}{D_{Q_x}}\frac{\partial^2 Q_{x_1}}{\partial x^2}+\mu_y\frac{\partial^3 w_1}{\partial x\,\partial y^2}-\frac{\mu_y}{D_{Q_y}}\frac{\partial^2 Q_{y_1}}{\partial x\,\partial y}\right)+$$
$$\frac{1}{2}D_{xy}\left(2\frac{\partial^3 w_1}{\partial x\,\partial y^2}-\frac{1}{D_{Q_x}}\frac{\partial^2 Q_{x_1}}{\partial y^2}-\frac{1}{D_{Q_y}}\frac{\partial^2 Q_{y_1}}{\partial x\,\partial y}\right)=0 \tag{7}$$

$$Q_{y_1}+\frac{D_y}{1-\mu_x\mu_y}\left(\frac{\partial^3 w_1}{\partial y^3}-\frac{1}{D_{Q_y}}\frac{\partial^2 Q_{y_1}}{\partial y^2}+\mu_x\frac{\partial^3 w_1}{\partial x^2\partial y}-\frac{\mu_x}{D_{Q_x}}\frac{\partial^2 Q_{x_1}}{\partial x\partial y}\right)+\frac{1}{2}D_{xy}\left(2\frac{\partial^3 w_1}{\partial x^2\partial y}-\frac{1}{D_{Q_x}}\frac{\partial^2 Q_{x_1}}{\partial x\partial y}-\frac{1}{D_{Q_y}}\frac{\partial^2 Q_{y_1}}{\partial x^2}\right)=0 \quad (8)$$

$$L_D w_1-\frac{E_y}{r(1-\mu'_x\mu'_y)}\left(\frac{\partial v_1}{\partial y}-\frac{w_1}{r}+\mu'_x\frac{\partial u_1}{\partial x}\right)-\left(N_{x_0}\frac{\partial^2 w_1}{\partial x^2}+N_{y_0}\frac{\partial^2 w_1}{\partial y^2}+2N_{xy_0}\frac{\partial^2 w_1}{\partial x\partial y}\right)-\frac{1}{D_{Q_x}}\left[\frac{D_x}{1-\mu_x\mu_y}\frac{\partial^3 Q_{x_1}}{\partial x^3}+\left(\frac{\mu_x D_y}{1-\mu_x\mu_y}+D_{xy}\right)\frac{\partial^3 Q_{x_1}}{\partial x\partial y^2}\right]-\frac{1}{D_{Q_y}}\left[\frac{D_y}{1-\mu_x\mu_y}\frac{\partial^3 Q_{y_1}}{\partial y^3}+\left(\frac{\mu_y D_x}{1-\mu_x\mu_y}+D_{xy}\right)\frac{\partial^3 Q_{y_1}}{\partial x^2\partial y}\right]=0 \quad (9)$$

where L_D is the linear differential operator defined by

$$L_D=\frac{D_x}{1-\mu_x\mu_y}\frac{\partial^4}{\partial x^4}+\left(\frac{\mu_y D_x}{1-\mu_x\mu_y}+2D_{xy}+\frac{\mu_x D_y}{1-\mu_x\mu_y}\right)\frac{\partial^4}{\partial x^2\partial y^2}+\frac{D_y}{1-\mu_x\mu_y}\frac{\partial^4}{\partial y^4}$$

At this point, six equations have been eliminated and, therefore, five equations remain—equations (5), (6), (7), (8), and (9) in u_1, v_1, w_1, Q_{x_1}, and Q_{y_1}.

A further reduction in the number of equations and unknowns is effected by first solving equations (5) and (6) to obtain relations from which u_1 and v_1 can be determined and then substituting for u_1 and v_1 in equation (9). The expressions obtained by solving equations (5) and (6), in accordance with the rules governing the multiplication of linear operators, are

$$rL_E u_1=\mu'_y\frac{G_{xy}}{E_y}\frac{\partial^3 w_1}{\partial x^3}-\frac{G_{xy}}{E_x}\frac{\partial^3 w_1}{\partial x\partial y^2} \quad (10)$$

and

$$rL_E v_1=\left(1-\mu'_y\frac{G_{xy}}{E_y}\right)\frac{\partial^3 w_1}{\partial x^2\partial y}+\frac{G_{xy}}{E_x}\frac{\partial^3 w_1}{\partial y^3} \quad (11)$$

where L_E is the linear differential operator defined by

$$L_E=\frac{G_{xy}}{E_y}\frac{\partial^4}{\partial x^4}+\left(1-\mu'_x\frac{G_{xy}}{E_x}-\mu'_y\frac{G_{xy}}{E_y}\right)\frac{\partial^4}{\partial x^2\partial y^2}+\frac{G_{xy}}{E_x}\frac{\partial^4}{\partial y^4}$$

The relationships given by equations (10) and (11) may be written in a form more suitable for substitution into equation (9) by differentiating equation (10) with respect to x, equation (11) with respect to y, and then, symbolically solving the equations for $\frac{\partial u_1}{\partial x}$ and $\frac{\partial v_1}{\partial y}$, respectively, to give

$$\frac{\partial u_1}{\partial x}=L_E^{-1}\left(\frac{\mu'_y}{r}\frac{G_{xy}}{E_y}\frac{\partial^4 w_1}{\partial x^4}-\frac{G_{xy}}{rE_x}\frac{\partial^4 w_1}{\partial x^2\partial y^2}\right) \quad (12)$$

$$\frac{\partial v_1}{\partial y}=L_E^{-1}\left(\frac{1-\mu'_y\frac{G_{xy}}{E_y}}{r}\frac{\partial^4 w_1}{\partial x^2\partial y^2}+\frac{G_{xy}}{rE_x}\frac{\partial^4 w_1}{\partial y^4}\right) \quad (13)$$

where L_E^{-1} is defined by $L_E^{-1}(L_E w_1)=L_E(L_E^{-1}w_1)=w_1$. The inverse operator L_E^{-1} is similar to the inverse operator ∇^{-4} defined in reference 7, and, as is shown subsequently, L_E^{-1} reduces to ∇^{-4} for the special case of the isotropic plate. Substituting the expressions for $\frac{\partial u_1}{\partial x}$ and $\frac{\partial v_1}{\partial y}$ from equations (12) and (13) into equation (9) and replacing $\frac{w_1}{r}$ by $L_E^{-1}\left(L_E\frac{w_1}{r}\right)$ results in the following equation:

$$L_D w_1+\frac{G_{xy}}{r^2}L_E^{-1}\frac{\partial^4 w_1}{\partial x^4}-\left(N_{x_0}\frac{\partial^2 w_1}{\partial x^2}+N_{y_0}\frac{\partial^2 w_1}{\partial y^2}+2N_{xy_0}\frac{\partial^2 w_1}{\partial x\partial y}\right)-\frac{1}{D_{Q_x}}\left[\frac{D_x}{1-\mu_x\mu_y}\frac{\partial^3 Q_{x_1}}{\partial x^3}+\left(\frac{\mu_x D_y}{1-\mu_x\mu_y}+D_{xy}\right)\frac{\partial^3 Q_{x_1}}{\partial x\partial y^2}\right]-\frac{1}{D_{Q_y}}\left[\frac{D_y}{1-\mu_x\mu_y}\frac{\partial^3 Q_{y_1}}{\partial y^3}+\left(\frac{\mu_y D_x}{1-\mu_x\mu_y}+D_{xy}\right)\frac{\partial^3 Q_{y_1}}{\partial x^2\partial y}\right]=0 \quad (14)$$

At this stage, the original 11 equations have been reduced to the 3 equations (14), (7), and (8), in the 3 unknowns w_1, Q_{x_1}, and Q_{y_1}.

For most problems, equations (14), (7), and (8), together with proper boundary conditions, can determine the elastic stability criteria for an orthotropic curved plate subjected to middle-surface loadings. It should be noted, however, that the three equations are not sufficient if boundary conditions are specified on the displacements u_1 and v_1. For boundary conditions on u_1 and v_1, as well as w_1, equations (10) and (11) must also be employed. When boundary conditions are not specified on u_1 and v_1 (the case when only equations (14), (7), and (8) are used), certain boundary conditions are implied, nevertheless, by equations (10) and (11), consistent with the expression for w_1. A discussion of similar implied boundary conditions on u_1 and v_1 is included in reference 7.

SPECIAL CASES OF BUCKLING EQUATIONS

Isotropic curved sandwich plate with non-direct-stress-carrying core.—For the isotropic sandwich plate with non-direct-stress-carrying core, the physical constants bear the following relationships to those of the orthotropic plate:

$$D_{Q_x}=D_{Q_y}=D_Q$$

$$\mu_x=\mu_y=\mu'_x=\mu'_y=\mu$$

$$D_x=D_y=D_s(1-\mu^2)$$

$$D_{xy}=D_s(1-\mu)$$

$$E_x=E_y=2E_s t_s$$

$$G_{xy}=\frac{E_s t_s}{1+\mu}$$

These relationships permit equation (14) to be simplified as follows:

$$D_s\nabla^4 w_1+\frac{2t_s E_s}{r^2}\nabla^{-4}\frac{\partial^4 w_1}{\partial x^4}-\left(N_{x_0}\frac{\partial^2 w_1}{\partial x^2}+N_{y_0}\frac{\partial^2 w_1}{\partial y^2}+2N_{xy_0}\frac{\partial^2 w_1}{\partial x\partial y}\right)-\frac{D_s}{D_Q}\nabla^2\left(\frac{\partial Q_{x_1}}{\partial x}+\frac{\partial Q_{y_1}}{\partial y}\right)=0 \quad (15)$$

where

$$\nabla^2=\frac{\partial^2}{\partial x^2}+\frac{\partial^2}{\partial y^2}$$

$$\nabla^4=\frac{\partial^4}{\partial x^4}+2\frac{\partial^4}{\partial x^2\partial y^2}+\frac{\partial^4}{\partial y^4}$$

and ∇^{-4} is defined by $\nabla^{-4}(\nabla^4 w_1)=\nabla^4(\nabla^{-4}w_1)=w_1$.

In this case, however, equations (7) and (8) are not needed to obtain the quantity $\frac{\partial Q_{x_1}}{\partial x}+\frac{\partial Q_{y_1}}{\partial y}$, since this quantity can be found more conveniently from equation (4e′). From equation (4e′), therefore,

$$\frac{\partial Q_{x_1}}{\partial x}+\frac{\partial Q_{y_1}}{\partial y}=-\left(\frac{N_{y_1}}{r}+N_{x_0}\frac{\partial^2 w_1}{\partial x^2}+N_{y_0}\frac{\partial^2 w_1}{\partial y^2}+2N_{xy_0}\frac{\partial^2 w_1}{\partial x\,\partial y}\right)$$

Substituting for $\frac{\partial Q_{x_1}}{\partial x}+\frac{\partial Q_{y_1}}{\partial y}$ in equation (15) gives

$$D_s\nabla^4 w_1+\frac{2t_sE_s}{r^2}\nabla^{-4}\frac{\partial^4 w_1}{\partial x^4}-\frac{D_s}{D_Q}\nabla^2\left(-\frac{N_{y_1}}{r}\right)-\left(1-\frac{D_s}{D_Q}\nabla^2\right)\left(N_{x_0}\frac{\partial^2 w_1}{\partial x^2}+N_{y_0}\frac{\partial^2 w_1}{\partial y^2}+2N_{xy_0}\frac{\partial^2 w_1}{\partial x\,\partial y}\right)=0 \qquad (16)$$

The term $-N_{y_1}/r$, which appears in equation (14) for the orthotropic plate as $\frac{G_{xy}}{r^2}L_E^{-1}\frac{\partial^4 w_1}{\partial x^4}$, reduces to $\frac{2t_sE_s}{r^2}\nabla^{-4}\frac{\partial^4 w_1}{\partial x^4}$ for the case of the isotropic plate. If this result is used in equation (16), the equation of equilibrium for the isotropic curved sandwich plate with non-direct-stress-carrying core becomes

$$D_s\nabla^4 w_1+\left(1-\frac{D_s}{D_Q}\nabla^2\right)\left[\frac{2t_sE_s}{r^2}\nabla^{-4}\frac{\partial^4 w_1}{\partial x^4}-\left(N_{x_0}\frac{\partial^2 w_1}{\partial x^2}+N_{y_0}\frac{\partial^2 w_1}{\partial y^2}+2N_{xy_0}\frac{\partial^2 w_1}{\partial x\,\partial y}\right)\right]=0 \qquad (17)$$

If the radius is taken infinite, equation (17) becomes equivalent to equation (71) of reference 4.

Isotropic curved plate, deflections due to shear neglected.—The present theory can be reduced to a known theory for ordinary curved plates by appropriate substitutions for the physical constants. For an ordinary plate, the physical constants become

$$D_{Q_x}=D_{Q_y}=\infty \qquad \text{(no shear deflections)}$$

$$\mu_x=\mu_y=\mu'_x=\mu'_y=\mu$$

$$D_x=D_y=D(1-\mu^2)$$

$$D_{xy}=D(1-\mu)$$

$$E_x=E_y=Et$$

$$G_{xy}=\frac{Et}{2(1+\mu)}$$

Upon substitution of these constants into equation (14), the resulting equation becomes independent of equations (7) and (8) and the equilibrium equation of the ordinary curved plate, therefore, is given by

$$D\nabla^4 w_1+\frac{Et}{r^2}\nabla^{-4}\frac{\partial^4 w_1}{\partial x^4}-\left(N_{x_0}\frac{\partial^2 w_1}{\partial x^2}+N_{y_0}\frac{\partial^2 w_1}{\partial y^2}+2N_{xy_0}\frac{\partial^2 w_1}{\partial x\,\partial y}\right)=0 \qquad (18)$$

Equation (18) is equivalent to the modified equilibrium equation for ordinary curved plates presented in reference 7.

CONCLUDING REMARKS

A theory has been developed for analyzing the elastic behavior of orthotropic curved plates, that takes into account the effect of deflections due to shear and requires the use of 12 physical constants to characterize the plate. Seven of the physical constants appearing in the equations of equilibrium are directly associated with the flat-orthotropic-plate theory presented in NACA Rep. 899. The remaining five physical constants are included in the present theory to account for the stretching under loading of the middle surface of the curved plate.

For each type of orthotropic plate, the 12 physical constants may be evaluated either from the geometry of the cross sections and the properties of the materials used or by direct tests conducted on sample specimens. Because two reciprocal relationships exist (see appendix), only 10 of the constants need be determined independently.

The theory presented in this report does not take into account the compressibility of the sandwich plate in a direction normal to the faces. Such an effect does not enter into flat-sandwich-plate theory but might be of importance in certain types of curved sandwich plates where the elastic constants of the core material are small compared with those of the face material.

For practical sandwiches of the end-grain-balsa or corrugated-core types, order-of-magnitude considerations lead to the conclusion that the effect of core compressibility will be negligible as regards both buckling loads and deflections. For sandwiches with less stiff cores—for example, cellular cellulose acetate—the effect of core compressibility will be more important. Even for such cores, however, in the case of all the numerical examples given in NACA TN 1832, the effect of core compressibility is negligible in comparison with the effect of transverse shear deformations for sandwich-type circular cylindrical shells. The present theory, in which the core is assumed to be incompressible in a direction normal to the faces, appears, therefore, to be applicable to most practical sandwich plates.

Langley Aeronautical Laboratory,
National Advisory Committee for Aeronautics,
Langley Field, Va., *November 22, 1949.*

APPENDIX

DERIVATION OF MIDDLE-SURFACE FORCE-DISTORTION RELATIONSHIPS

The orthotropic curved plate (effects of transverse shear being considered) is characterized by 12 physical constants, 7 of which are associated with flat plates, as presented in reference 3. The remaining five constants enter the present theory because of the additional stretching strain developed under loading in the middle surface of the curved plate. In this appendix the five additional constants are defined, and expressions for the resultant forces, involving these constants, are derived.

Physical constants.—The seven flat-plate constants are the flexural stiffnesses D_x and D_y, the flexural Poisson ratios μ_x and μ_y, the twisting stiffness D_{xy}, and the transverse shear stiffnesses D_{Q_x} and D_{Q_y}. As derived in reference 3, the first four of these constants are related by

$$\mu_x D_y = \mu_y D_x$$

The five additional constants appearing in the curved-plate theory are the extensional stiffnesses E_x and E_y, the extensional Poisson ratios μ'_x and μ'_y, and the shearing stiffness G_{xy}. The first four constants are found by a procedure similar to that used in reference 3 to be related by

$$\mu'_x E_y = \mu'_y E_x$$

As a result of these two reciprocal relationships, only 10 of the 12 physical constants need be determined independently.

The five additional physical constants are defined in the same manner as the flat-plate constants of reference 3—that is, by considering the effect of imposing particular loading conditions on the element shown in figure 1. To obtain E_x, for example, only the middle-surface forces N_x are assumed to be acting on the element. As a result of this loading, the strain ϵ_x is induced in the middle surface. The stiffness E_x is then defined by the relation $E_x = \frac{N_x}{\epsilon_x}$ when only N_x is acting.

The Poisson effect of the forces N_x acting on the element is to introduce a strain ϵ_y, negative with respect to ϵ_x, in the middle surface. The constant μ'_x is then defined by the relation $\mu'_x = -\frac{\epsilon_y}{\epsilon_x}$ when only N_x is acting.

In a similar manner, E_y, μ'_y, and G_{xy} are defined as $E_y = \frac{N_y}{\epsilon_y}$ when only N_y is acting, $\mu'_y = -\frac{\epsilon_x}{\epsilon_y}$ when only N_y is acting, and $G_{xy} = \frac{N_{xy}}{\gamma_{xy}}$.

Resultant forces.—The relations between the elastic middle-surface strains and forces, satisfying the foregoing definitions, can be written as

$$\left.\begin{aligned} \epsilon_x &= \frac{N_x}{E_x} - \mu'_y \frac{N_y}{E_y} \\ \epsilon_y &= \frac{N_y}{E_y} - \mu'_x \frac{N_x}{E_x} \\ \gamma_{xy} &= \frac{N_{xy}}{G_{xy}} \end{aligned}\right\} \tag{A1}$$

The three strain equations can be solved for N_x, N_y, and N_{xy} in terms of the strains to give

$$\left.\begin{aligned} N_x &= \frac{E_x}{1-\mu'_x\mu'_y}(\epsilon_x + \mu'_y\epsilon_y) \\ N_y &= \frac{E_y}{1-\mu'_x\mu'_y}(\epsilon_y + \mu'_x\epsilon_x) \\ N_{xy} &= G_{xy}\gamma_{xy} \end{aligned}\right\} \tag{A2}$$

Substituting the expressions for the middle-surface strains of a cylindrical section in terms of middle-surface displacements

$$\epsilon_x = \frac{\partial u}{\partial x}$$

$$\epsilon_y = \frac{\partial v}{\partial y} - \frac{w}{r}$$

$$\gamma_{xy} = \frac{\partial u}{\partial y} + \frac{\partial v}{\partial x}$$

into equation (A2) gives

$$\left.\begin{aligned} N_x &= \frac{E_x}{1-\mu'_x\mu'_y}\left[\frac{\partial u}{\partial x} + \mu'_y\left(\frac{\partial v}{\partial y} - \frac{w}{r}\right)\right] \\ N_y &= \frac{E_y}{1-\mu'_x\mu'_y}\left(\frac{\partial v}{\partial y} - \frac{w}{r} + \mu'_x\frac{\partial u}{\partial x}\right) \\ N_{xy} &= G_{xy}\left(\frac{\partial v}{\partial x} + \frac{\partial u}{\partial y}\right) \end{aligned}\right\} \tag{A3}$$

These equations are used in the derivation of the equilibrium equations.

REFERENCES

1. Leggett, D. M. A., and Hopkins, H. G.: Sandwich Panels and Cylinders under Compressive End Loads. R. & M. No. 2262, British A.R.C., 1942.
2. Bijlaard, P. P.: On the Elastic Stability of Sandwich Plates. I–II. Koninklijke Nederlandsche Akad. Wetenschappen. Reprinted from Proc., vol. L, nos. 1 and 2, 1947, pp. 79–87, 186–193.
3. Libove, Charles, and Batdorf, S. B.: A General Small-Deflection Theory for Flat Sandwich Plates. NACA Rep. 899, 1948.
4. Reissner, Eric: Finite Deflections of Sandwich Plates. Jour. Aero. Sci., vol. 15, no. 7, July 1948, pp. 435–440.
5. Reissner, Eric: Small Bending and Stretching of Sandwich-Type Shells. NACA TN 1832, 1949.
6. Donnell, L. H.: Stability of Thin-Walled Tubes under Torsion. NACA Rep. 479, 1933.
7. Batdorf, S. B.: A Simplified Method of Elastic-Stability Analysis for Thin Cylindrical Shells. NACA Rep. 874, 1947.

U. S. GOVERNMENT PRINTING OFFICE: 1951

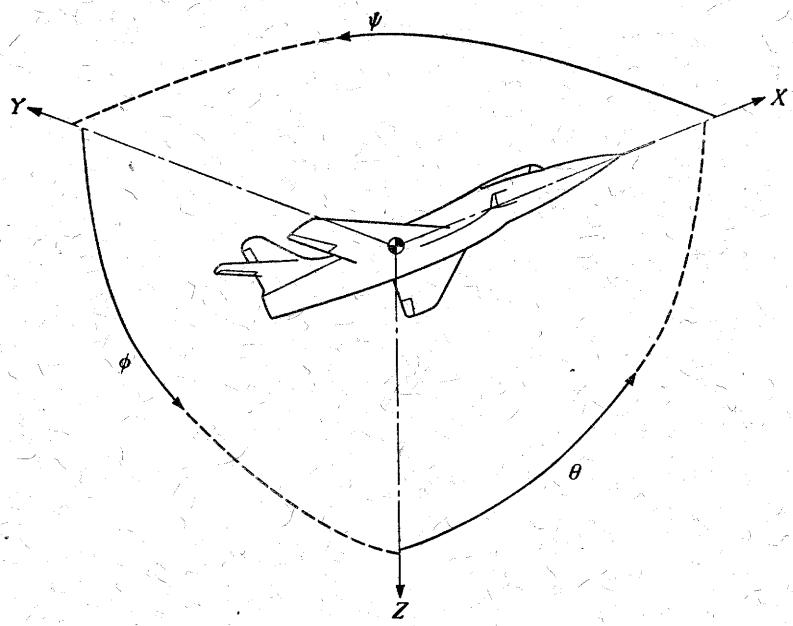

Positive directions of axes and angles (forces and moments) are shown by arrows

Axis		Force (parallel to axis) symbol	Moment about axis			Angle		Velocities	
Designation	Symbol		Designation	Symbol	Positive direction	Designation	Symbol	Linear (component along axis)	Angular
Longitudinal	X	X	Rolling	L	$Y \longrightarrow Z$	Roll	ϕ	u	p
Lateral	Y	Y	Pitching	M	$Z \longrightarrow X$	Pitch	θ	v	q
Normal	Z	Z	Yawing	N	$X \longrightarrow Y$	Yaw	ψ	w	r

Absolute coefficients of moment

$C_l=\frac{L}{qbS}$ (rolling) $\quad C_m=\frac{M}{qcS}$ (pitching) $\quad C_n=\frac{N}{qbS}$ (yawing)

Angle of set of control surface (relative to neutral position), δ. (Indicate surface by proper subscript.)

4. PROPELLER SYMBOLS

D Diameter

p Geometric pitch

p/D Pitch ratio

V' Inflow velocity

V_s Slipstream velocity

T Thrust, absolute coefficient $C_T=\frac{T}{\rho n^2 D^4}$

Q Torque, absolute coefficient $C_Q=\frac{Q}{\rho n^2 D^5}$

P Power, absolute coefficient $C_P=\frac{P}{\rho n^3 D^5}$

C_s Speed-power coefficient $=\sqrt[5]{\frac{\rho V^5}{P n^2}}$

η Efficiency

n Revolutions per second, rps

Φ Effective helix angle $=\tan^{-1}\left(\frac{V}{2\pi r n}\right)$

5. NUMERICAL RELATIONS

1 hp=76.04 kg-m/s=550 ft-lb/sec

1 metric horsepower=0.9863 hp

1 mph=0.4470 mps

1 mps=2.2369 mph

1 lb=0.4536 kg

1 kg=2.2046 lb

1 mi=1,609.35 m=5,280 ft

1 m=3.2808 ft