[redacted]

Copy 190
RM L51E25

[redacted]

NACA RM L51E25

TECH LIBRARY KAFB, NM
0143865

NACA

RESEARCH MEMORANDUM

7259

FLIGHT INVESTIGATION OF THE DRAG OF ROUND-NOSED BODIES OF REVOLUTION AT MACH NUMBERS FROM 0.6 TO 1.5 USING ROCKET-PROPELLED TEST VEHICLES

By Roger G. Hart

Langley Aeronautical Laboratory
Langley Field, Va.

[redacted]

NATIONAL ADVISORY COMMITTEE
FOR AERONAUTICS

WASHINGTON
July 25, 1951

[redacted]

Classification cancelled (or changed to UNCLASSIFIED)

By Authority of NASA Tech Pub Announcement #115
(OFFICER AUTHORIZED TO CHANGE)

By ..... January 52
NAME AND

.....
GRADE OF OFFICER MAKING CHANGE)

3 Apr 61
DATE

TECH LIBRARY KAFB, NM
0143865

 [redacted]

NATIONAL ADVISORY COMMITTEE FOR AERONAUTICS

RESEARCH MEMORANDUM

FLIGHT INVESTIGATION OF THE DRAG OF ROUND-NOSED BODIES OF REVOLUTION AT MACH NUMBERS FROM 0.6 TO 1.5 USING ROCKET-PROPELLED TEST VEHICLES

By Roger G. Hart

SUMMARY

Values of total drag coefficient were measured for four round-nosed bodies of revolution in free flight at Mach numbers from 0.6 to 1.5 and Reynolds numbers from 10×10^6 to 50×10^6. The bodies were designed by rounding off the sharp, fineness-ratio-3.56 nose of a previously tested configuration. The nose radii tested were 27.4, 38.7, 80.6, and 100 percent of the maximum body radius and corresponded to values of 0.075, 0.150, 0.650, and 1.000, respectively, for the ratio of nose-sphere frontal area to body frontal area.

The body having least bluntness did not differ appreciably in drag from the pointed-nosed body. The others showed marked increases in supersonic drag with increasing bluntness.

INTRODUCTION

The National Advisory Committee for Aeronautics is at present conducting an investigation to determine the drag of practical fuselage shapes at transonic and supersonic speeds. One phase of this program is concerned with the effects of nose shape on the drag of an airplane or missile configuration. It is of particular interest to determine the drag penalties associated with nose bluntness, since blunt noses are desirable from the standpoint of visibility and provide practical locations for radar and other seeker devices.

Tests have been made to determine the drag changes due to rounding off the nose of a body of revolution to various radii. In reference 1 it was shown that a moderate degree of bluntness may have no appreciable effect on the drag. In the present paper results are given for noses

[redacted]

PERMANENT RECORD

[redacted]

having greater degrees of bluntness. The tests were conducted at the Pilotless Aircraft Research Station, Wallops Island, Va., with the use of rocket-propelled models. Data were obtained at Mach numbers from 0.6 to 1.5 and Reynolds numbers from 10×10^6 to 50×10^6.

MODELS AND TESTS

The general arrangement of the test configurations is shown in figure 1, and photographs of the test vehicles are shown in figure 2.

All bodies were adapted from the parabolic configuration of reference 1, which was a fin-stabilized body of revolution having a fineness ratio of 8.91 and the maximum diameter located at 40 percent of the body length. The blunt noses were designed by replacing the original nose point with spherical segments of radius 0.274, 0.387, 0.806, and 1.000 times the maximum body radius. These radii correspond to spheres having frontal areas 0.075, 0.150, 0.650, and 1.000 times that of the body. In each case, the spherical segment and the unmodified portion of the nose were tangent at the station where they met, and the profile slope was continuous. Aft of this station, each configuration was identical to the reference configuration.

For all models the frontal area was 0.307 square foot, the base area was 0.0586 square foot, and the exposed fin area was 1.69 square feet. The unmodified body length was 66.81 inches. In table I, values of body radius are listed for a number of lengthwise stations. Each model was stabilized by three 45° sweptback fins so located that the trailing edges intersected the body at a position corresponding to station 60.5 on the unmodified body. Measured in the streamwise direction, the chord was 9 inches and the thickness ratio was 0.0278.

The fuselages were of wood, sanded and finished with clear lacquer to form a smooth and fair surface. The fins were of polished duralumin.

Each model employed a two-stage propulsion system consisting of a 3.25-inch MK-7 aircraft rocket motor as the sustainer unit and a 5-inch HVAR motor as the booster unit. The booster was stabilized by four fins and engaged the sustainer motor by means of a nozzle-plug adapter during the first portion of the flight. Shortly after the booster stopped thrusting the model and booster separated because of differences in their drag deceleration rates. Then the sustainer motor fired, bringing the model to its maximum speed. The drag data were obtained during the period of coasting flight following sustainer burnout. The Reynolds numbers encountered during this period are plotted against Mach number

in figure 3. The flight tests covered a range of body-length Reynolds numbers from 10×10^6 to 50×10^6 and Mach numbers from 0.6 to 1.5.

The data were obtained and reduced by the methods described in reference 2. The instrumentation consisted of Doppler radar, SCR-584 radar theodolite, and radiosonde. Drag coefficients have been based on body frontal area and each represents the total drag of the configuration.

The methods by which the present data were reduced were such as to introduce no errors larger than the scatter in the data points for an individual model or the discrepancies among the faired curves for models of the same configuration. The reliability of the data presented in figure 4 can best be judged by noting the scatter in the points for each of the models and the small differences in trend of the data for the two models of the parabolic reference configuration.

RESULTS

The test results are shown in figure 4 where total drag coefficient based on body frontal area is plotted against Mach number for each of the configurations tested. Data for the model having a nose-radius ratio (ratio of nose radius to maximum body radius) of 0.274 and for the pointed-nosed models were obtained from reference 1. At Mach numbers greater than 1, the drag increased markedly with bluntness for all the round-nosed bodies with the exception of the configuration having least bluntness. That body, as noted in reference 1, did not differ appreciably in drag from the pointed-nosed body. At Mach numbers just below one all of the bodies showed drag rises corresponding to the force-break of the pointed-nosed body. The round-nosed bodies showed an additional drag rise at lower speeds. This effect was most pronounced for the bluntest body and was evident at Mach numbers as low as 0.8. The trends of the subsonic data suggest that nose bluntness had little or no effect on the drag of the configuration at lower speeds.

CONCLUDING REMARKS

Tests have been conducted to determine the drag changes due to rounding off the nose of a parabolic body of revolution to four different radii. The supersonic drag was not changed appreciably by rounding off the nose to a radius 0.274 times the maximum body radius, but was found to increase markedly as the nose radius was increased from that value.

More general conclusions regarding the drag of blunt bodies will be possible only when results are available for other basic bodies and other types of bluntness.

Langley Aeronautical Laboratory
National Advisory Committee for Aeronautics
Langley Field, Va.

REFERENCES

1. Hart, Roger G.: Flight Investigation at Mach Numbers from 0.8 to 1.5 to Determine the Effects of Nose Bluntness on the Total-Drag of Two Fin-Stabilized Bodies of Revolution. NACA RM L50I08a, 1950.

2. Welsh, Clement J.: Results of Flight Tests to Determine the Zero-Lift Drag Characteristics of a 60° Delta Wing with NACA 65-006 Airfoil Section and Various Double-Wedge Sections at Mach Numbers from 0.7 to 1.6. NACA RM L50F01, 1950.

TABLE I

POINTED-NOSED BODY COORDINATES IN INCHES

Station	Radius
0	0
2	.54
4	1.04
6	1.50
8	1.91
10	2.28
12	2.61
14	2.90
16	3.15
18	3.35
20	3.51
22	3.63
24	3.71
27	3.75
30	3.74
33	3.70
36	3.64
38	3.58
40	3.52
42	3.44
44	3.36
47	3.21
50	3.04
53	2.84
56	2.62
58	2.47
60	2.30
62	2.12
64	1.93
66.81	1.64

CONFIDENTIAL

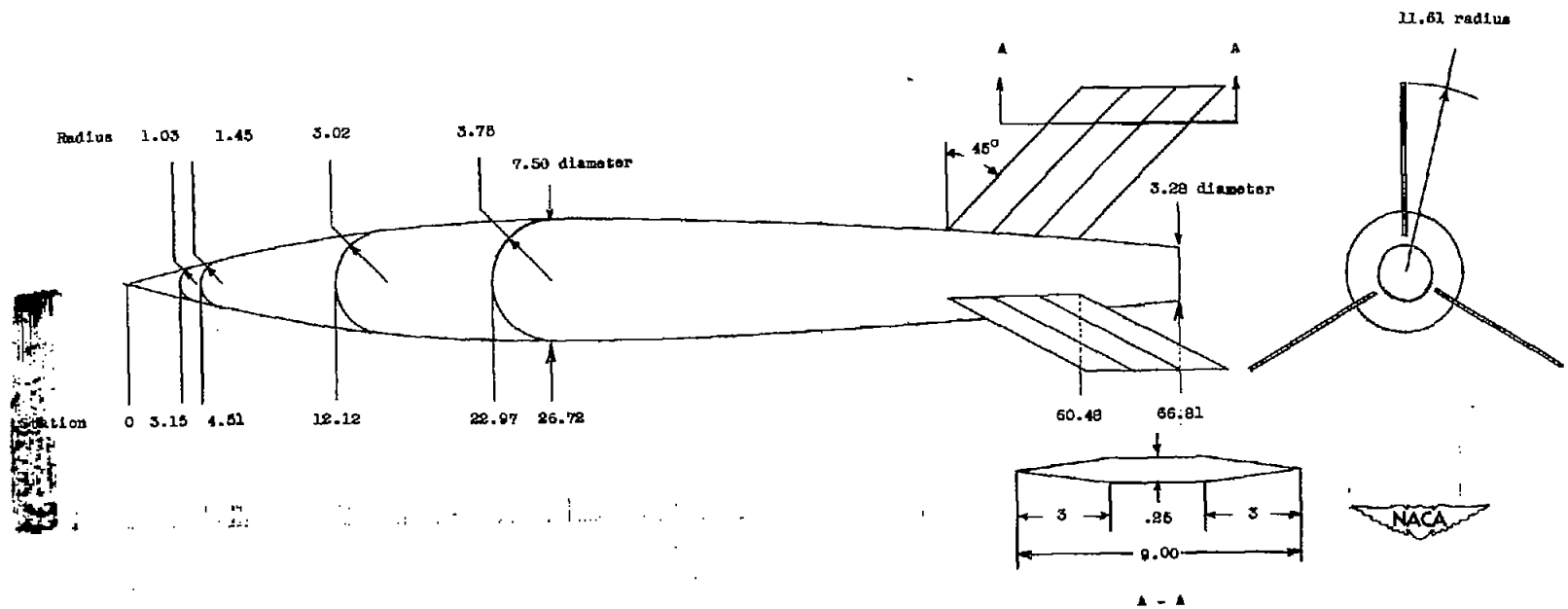

Figure 1.- General view of test configurations. Dimensions are in inches.

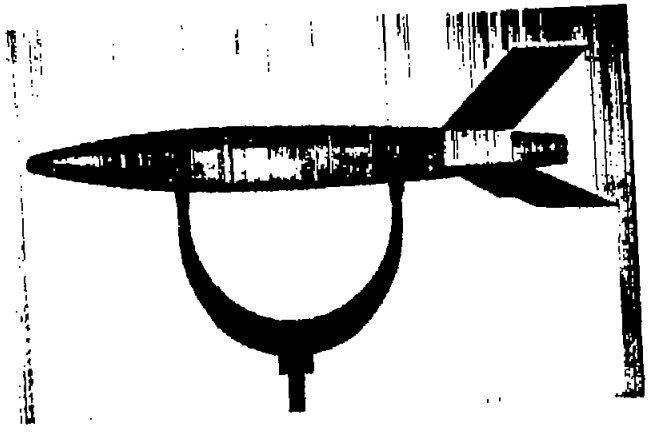

(a) $\frac{\text{Nose radius}}{\text{Maximum body radius}} = 0.274$ (reference 1).

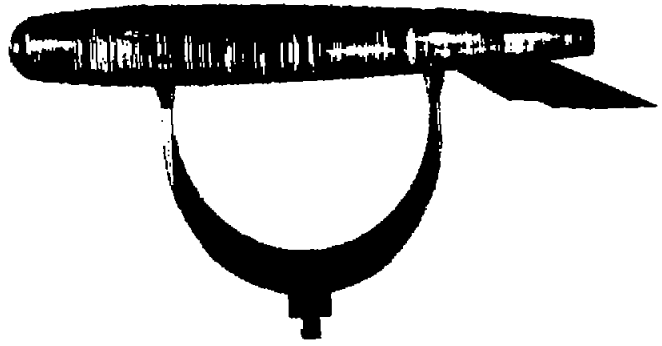

(c) $\frac{\text{Nose radius}}{\text{Maximum body radius}} = 0.806$.

(b) $\frac{\text{Nose radius}}{\text{Maximum body radius}} = 0.387$.

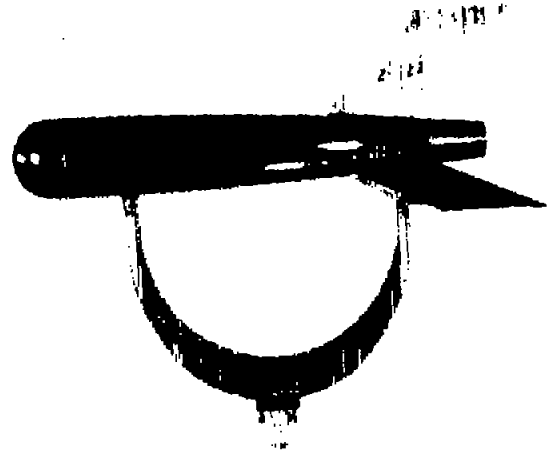

(d) $\frac{\text{Nose radius}}{\text{Maximum body radius}} = 1.000$.

Figure 2.- Round-nosed models.

L-69145

CONFIDENTIAL

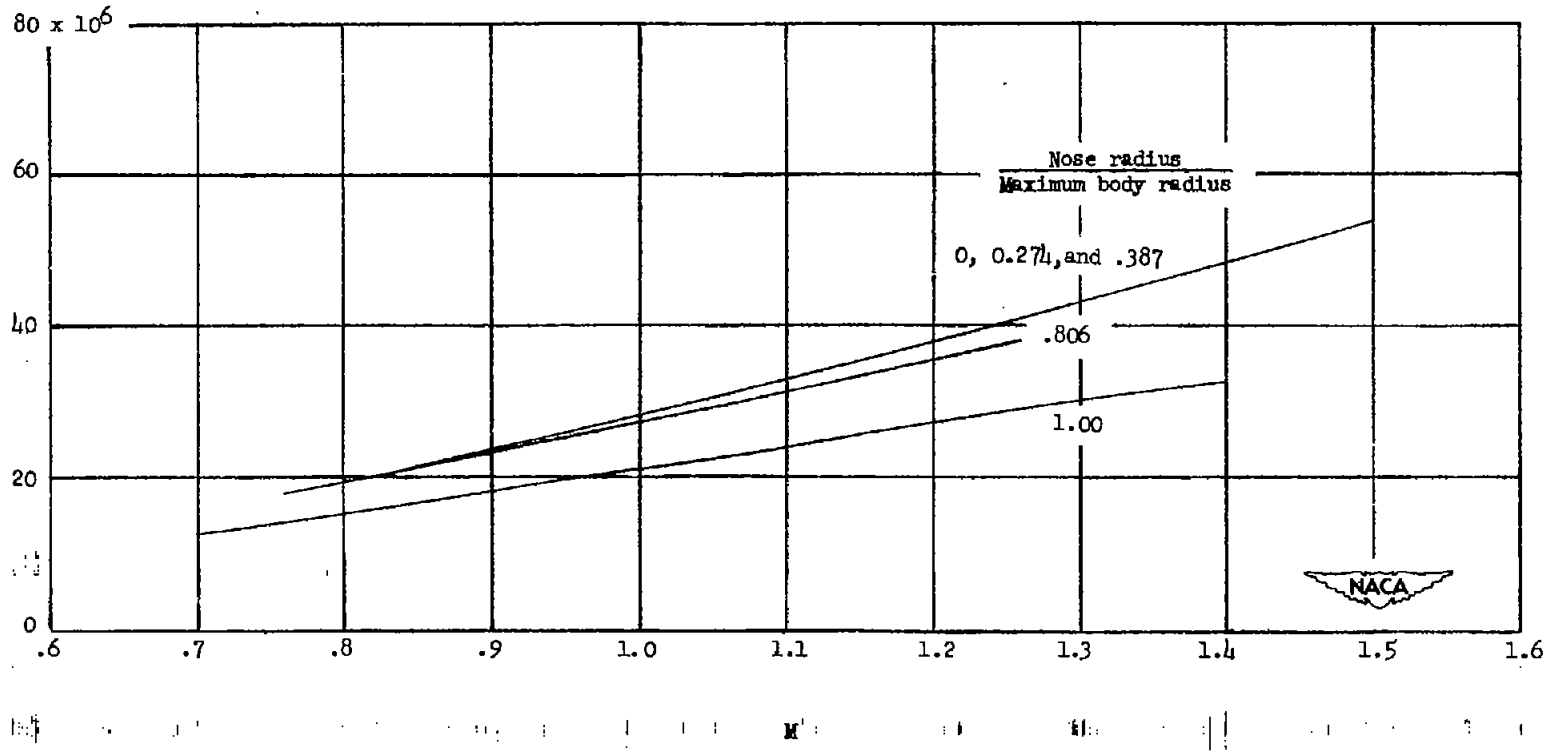

Figure 3.- Body-length Reynolds number R against Mach number M. The curves represent flight conditions.

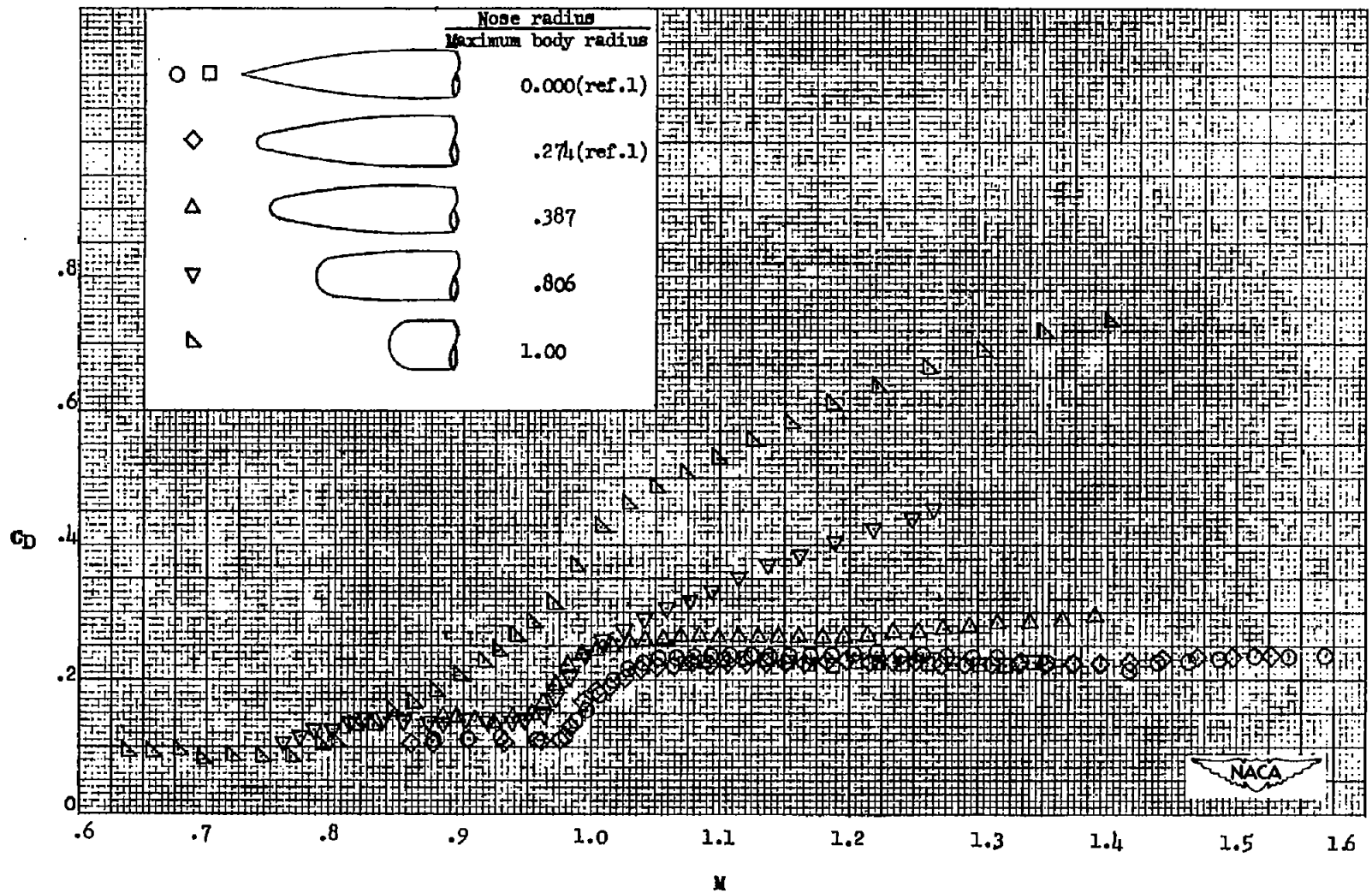

Figure 4.- Drag coefficient based on body frontal area C_D plotted against Mach number M for the present configurations and for the parabolic bodies of reference 1.

NACA-Langley - 7-18-51 - 275