Security Classification of This Report Has Been Cancelled

SECURITY INFORMATION

[redacted]

Copy 238
RM L51J29

[redacted]

NACA RM L51J29

TECH LIBRARY KAFB, NM
0143823

NACA

RESEARCH MEMORANDUM

7296

JET EFFECTS ON PRESSURES AND DRAGS OF BODIES

By Warren Gillespie, Jr.

Langley Aeronautical Laboratory
Langley Field, Va.

... changed to Unclassified
... Naca Tech Pub Announcement #108
(... TO CHANGE)
By ... 2 Nov 66
NK
GRADE OF OFFICER MAKING CHANGE)
4 Apr 61
DATE
CLASSIFIED DOCUMENT

[redacted]

NATIONAL ADVISORY COMMITTEE
FOR AERONAUTICS

WASHINGTON

November 9, 1951

[redacted]

319.98/13

[redacted]

Security Classification of This Report Has Been Cancelled

TECH LIBRARY KAFB, NM
0143823

JET EFFECTS ON PRESSURES AND DRAGS OF BODIES[1]

By Warren Gillespie, Jr.

INTRODUCTION

The propulsive jet that discharges from the base of a missile body or nacelle may, by interaction with the external stream, cause important drag and stability changes. This paper presents some results of recent investigations by the Lewis and Langley laboratories (references 1 to 7) of the jet effect on body end pressures and drag at zero lift.

JET EFFECT ON TOTAL BODY DRAG

The effect of the jet on total external body drag has proved difficult to measure. Lewis wind-tunnel tests of a strut-mounted 16-inch ram-jet unit (references 1 and 2) have indicated no effect of the hot jet when a cylindrical outlet was used and a possible decrease of external body drag when a convergent nozzle was used in the tests. In these tests the hot jet exit velocity was approximately $1\frac{1}{2}$ times the free-stream velocity.

Preliminary drag results obtained from the observed performance of rocket models in free flight, having jet exit velocities of approximately four times the free-stream velocity, however, indicate that an unfavorable jet effect on drag occurred for these models. This is shown by figure 1. The models were propelled by solid-fuel rocket motors located within the bodies. Thrust values obtained from static ground tests of the motors were used in conjunction with telemetered values of model acceleration to determine power-on drag.

The ratios of power-on to power-off drag coefficient are plotted against the low supersonic Mach numbers of the tests. The general level of the increase with respect to the power-off drag coefficient was of the order of 20 percent. The magnitude of the drag increments is estimated to be twice the probable error in determining thrust, acceleration, and model weight during power-on flight. The source of this drag increase has not been entirely explained, although several possible causes have been considered. For example, measurements of the pressure on the base of the cylindrical body model A show that increased base drag during powered flight can account for about one-half the drag increase for this model. It should be noted that these data are not applicable to missiles

[1]This is a reprint of the paper by the same author which was presented at the NACA Conference on Aerodynamic Design Problems of Supersonic Guided Missiles at the Ames Aeronautical Laboratory on Oct. 2-3, 1951.

PERMANENT RECORD

Security Classification of This Report Has Been Cancelled

propelled by turbojet or ram-jet engines since the jet exit velocity was approximately four times that of the free stream.

JET EFFECT ON BODY END PRESSURES

The discussion that follows will attempt to isolate some jet effects on body pressures due to variations in base geometry and jet characteristics.

Figure 2 illustrates two types of body end conditions and lists the jet-on parameters for which data are available. The first type of base has an annular area and a pressure over this area which is different from the jet exit pressure during powered flight. The second type of base has no annulus. However, if the jet flow should separate from the nozzle wall, an "effective" annular area would result so that base conditions would then be somewhat the same as for the first type of base.

In addition to the free-stream Mach number M and the body contour angle β_1 - which influence the base pressure with the jet off - the nozzle-exit half-angle β_j, the annulus-to-base area ratio A_a/A_b, and the jet exit velocity and pressure ratios with the free stream V_j/V and P_j/P, respectively, may all exert an influence at the base annulus when one exists and for some distance forward of the base with the jet on.

Figure 3 shows the effect of the ratio of total jet chamber pressure to free-stream static pressure on base annulus pressure coefficient. The data are from a Lewis wind tunnel investigation at Mach number 1.91 (reference 3). The model was built with a splitter plate and interchangeable half-bases each with an identical convergent half-nozzle. Straight boattails of 0°, 5.6°, 7.0°, and 9.3° were tested.

The end points of the curves at the lowest pressure ratio correspond to the condition of no jet flow. With increasing jet flow to the base, the jet exit velocity increased to approximately one-half the free-stream velocity and remained constant as the jet total-pressure ratio further increased above a ratio of 2. Beyond this pressure ratio of 2, therefore, only the jet-exit static pressure was increased. The increased pressure on the annulus at a pressure ratio near 1 indicates the drag-reducing effectiveness of base bleed. The wide separation of the curve for the cylindrical half-base with area ratio 0.74 from the curves with boattail and area ratio 0.43 indicates that the effect of annulus-to-base area ratio is large. The larger base annulus has a lower pressure. The effect of body angle is small. The trend with increasing pressure ratio is similar for all the bases. The pressure on the annulus first increases, then decreases, and finally increases again with increasing pressure ratio.

[redacted]

Security Classification of This Report Has Been Cancelled

The following explanation is given for such a trend: The pressure seal on the base is first broken when the jet begins to flow into the base region increasing the base pressure. As the jet pressure ratio is increased, the jet entrains air. This is illustrated by figure 4(a). Both the jet and the external stream aspirate the base annulus to lower the annular base pressure. With further increases of jet pressure ratio (fig. 4(b)), the jet expands. The shock waves located at points of interaction of the jet and the free stream increase in intensity causing a pressure feedback through the subsonic mixing region between the two streams with a resulting pressure increase on the base annulus.

Figure 5 shows the variation of the annulus pressure coefficient during the flights of two rocket-powered models. For the model of figure 5(a), the upper branch of the curve corresponds to power-on flight with time and Mach number increasing to the right. The annulus pressure coefficient decreased steadily. The lower branch corresponds to power-off flight with time increasing to the left. The pressure on the base annulus was increased by the jet for this particular model. The increase is attributed to the 30° nozzle half-angle and the relatively small base annulus.

For the model of figure 5(b) the jet effect on annulus pressure was in the opposite direction. For this model the upper branch of the curve corresponds to the condition of no jet flow. With the jet on, the pressure on the annulus was reduced. The reduction is attributed primarily to the large base annulus and smaller nozzle half-angle.

For the model of figure 5(a), the power-off drag over the entire base at Mach number 1.4 was 15 percent of the total power-off drag. At this same Mach number with the jet on, there was a thrust on the annulus, amounting to 8 percent of the total power-off drag. For the model of figure 5(b), the power-off base drag was approximately 20 percent of the total power-off drag. With the jet on, the base annulus contributed a drag which was also approximately 20 percent of the total power-off drag.

Figure 6 shows incremental base pressure coefficients due to the jet for rocket models that had large and small annulus-to-base area ratios and nozzle half-angles of 9°, 10°, 15°, and 30°. There were four models with 30° nozzles that defined the upper band and three with 9° nozzles that defined the lower band. The curves below the zero line correspond to single models.

The models with large base area ratios of 0.61 and 0.70 experienced negative increments while models with small area ratios of 0.37 and 0.24 experienced positive pressure increments due to the jet. The models with 30° nozzles lie well above those with 9° nozzles. The model with a 15° nozzle also lies above the one with a 10° nozzle. The effect of increased nozzle angle on the incremental pressure coefficient therefore

Security Classification of This Report Has Been Cancelled

appears to be in the same direction as that due to a reduced annulus-to-base area ratio. The pressure increment becomes more positive in each case.

Jet effects at rear body stations of an RM-10 rocket model are presented in figure 7. Figure 7(a) shows the side pressure coefficient for one body station slightly ahead of the base during power-on and power-off flight. The two branches of the curve come together at Mach number 1.4 and at higher Mach numbers there is no difference.

Figure 7(b) shows incremental side and base pressure coefficients due to the jet together with the jet-exit pressure coefficient. The side pressure increments at stations 1, 2, and 3 diminished to near-zero values as Mach number 1.4 was reached. The positive jet effect on side pressures also diminished rapidly with distance forward of the base. Positive pressure increments much larger than the jet-exit pressure occurred. This indicates that very strong shock waves were caused by interaction of the external stream and the jet issuing from the 30° nozzle.

Additional data from the Lewis investigation at Mach number 1.91 (reference 3) are shown in figure 8. The pressure drag coefficients for afterbodies with and without a base annulus are compared for constant values of the ratio of total-jet to free-stream static pressure. Three half-bases with straight boattails of 5.6°, 7.0°, and 9.3° were tested in each series. The pressure drags were obtained by integration of the pressures over the afterbodies.

The pressure drag for the series with no base annulus therefore consists entirely of side pressure drag over the straight boattail. The effect of the jet is noted by displacement of the curves in the vertical direction. The slope of the curves is primarily due to the basic variation of side pressure drag with boattail angle with no jet. A slight effect on the slope due to the jet is seen for the series with no annulus. The drag reductions decrease with smaller boattail angles.

For the series with an annulus, the drag includes base pressure drag from the annulus. The annulus largely prevented the jet from influencing the body side pressures. Jet effects were greater for this series.

Comparison of the two series at the same boattail angle shows that for a pressure ratio of 10 the annular bases had higher drag than the corresponding bases of the other series at this same pressure ratio of 10. At a pressure ratio of 15 the annular bases had the lower drag.

Comparison of the base in each series that had a fineness ratio of 1.5 shows that the annular base had less drag for the same pressure ratios of 10 and 15.

Security Classification of This Report Has Been Cancelled

The selection of an optimum boattail geometry may therefore be influenced by jet effect on the afterbody pressures.

SUMMARY

The experimental results may be summarized as follows: A decrease in base drag can be obtained by a small amount of jet flow to the base. A large base annulus may contribute as much or greater base drag during power-on conditions than the whole base area during power-off flight. The jet effect on body side pressures at supersonic Mach numbers decreases rapidly with increasing Mach number and distance forward of the base. More extensive measurements are required to clarify the jet effect on total drag.

Security Classification of This Report Has Been Cancelled

REFERENCES

1. Nussdorfer, T. J., Wilcox, F., and Perchonok, E.: Investigation at Zero Angle of Attack of a 16-Inch Ram-Jet Engine in 8- By 6-Foot Supersonic Wind Tunnel. NACA RM E50L04, 1951.

2. Perchonok, Eugene, Wilcox, Fred, and Pennington, Donald: Effect of Angle of Attack and Exit Nozzle Design on the Performance of a 16-Inch Ram Jet at Mach Numbers Between 1.5 and 2.0. (Prospective NACA paper.)

3. Cortright, Edgar M., Jr., and Schroeder, Albert H.: Investigation at Mach Number 1.91 of Side and Base Pressure Distributions over Conical Boattails without and with Jet Flow Issuing from Base. NACA RM E51F26, 1951.

4. Love, Eugene S.: Aerodynamic Investigation of a Parabolic Body of Revolution at Mach Number of 1.92 and Some Effects of an Annular Jet Exhausting from the Base. NACA RM L9K09, 1950.

5. Purser, Paul E., Thibodaux, Joseph G., and Jackson, H. Herbert: Note on Some Observed Effects of Rocket-Motor Operation on the Base Pressures of Bodies in Free Flight. NACA RM L50I18, 1950.

6. Stoney, William E., Jr., and Katz, Ellis: Pressure Measurements on a Sharply Converging Fuselage Afterbody with Jet On and Off at Mach Numbers from 0.8 to 1.6. NACA RM L50F06, 1950.

7. Cortright, Edgar M., Jr., and Schroeder, Albert H.: Preliminary Investigation of Effectiveness of Base Bleed in Reducing Drag of Blunt-Base Bodies in Supersonic Stream. NACA RM E51A26, 1951.

Security Classification of This Report Has Been Cancelled

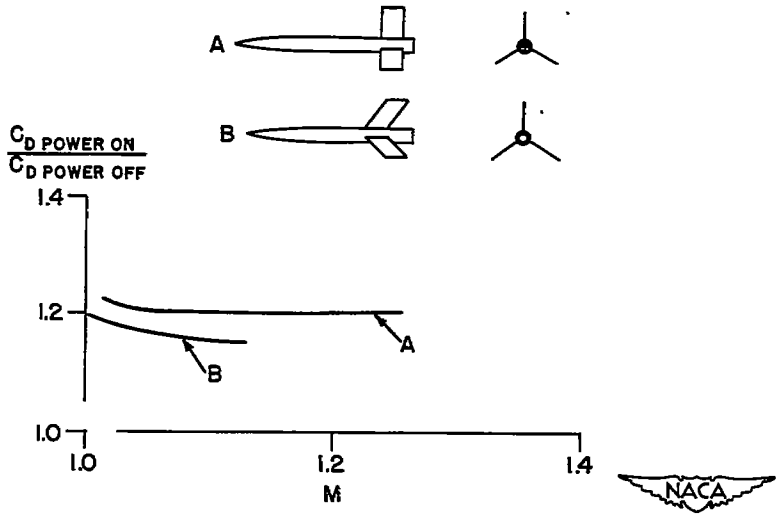

Figure 1.- Jet effect on total drag coefficient of two rocket models.

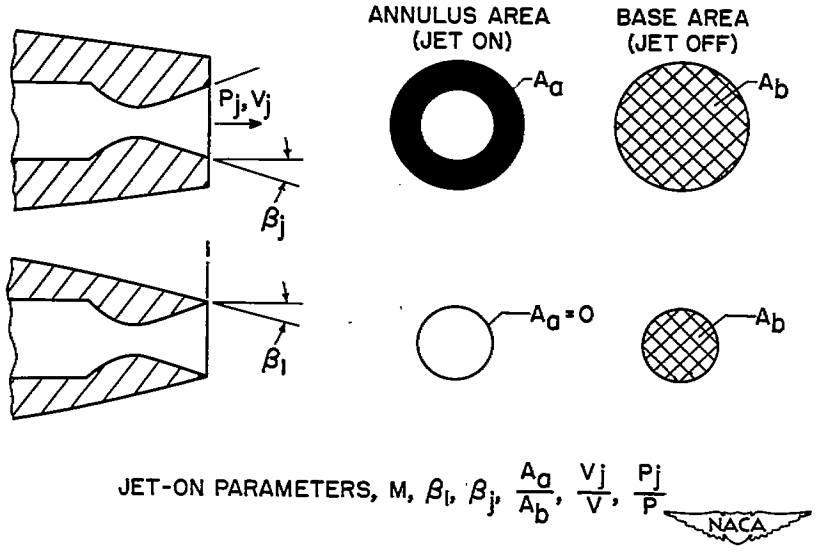

Figure 2.- Base geometry and jet-on parameters.

Security Classification of This Report Has Been Cancelled

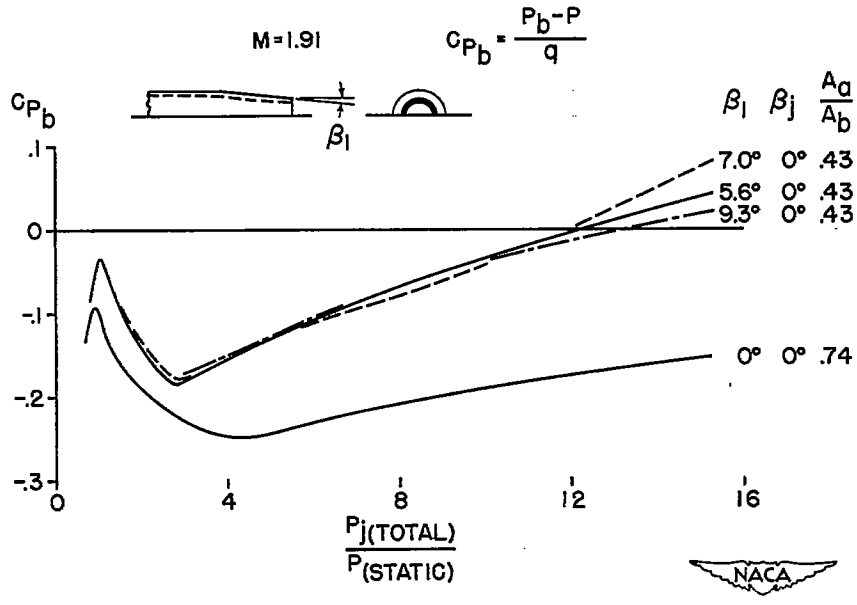

Figure 3.- Variation of base annulus pressure coefficient with pressure ratio. M = 1.91.

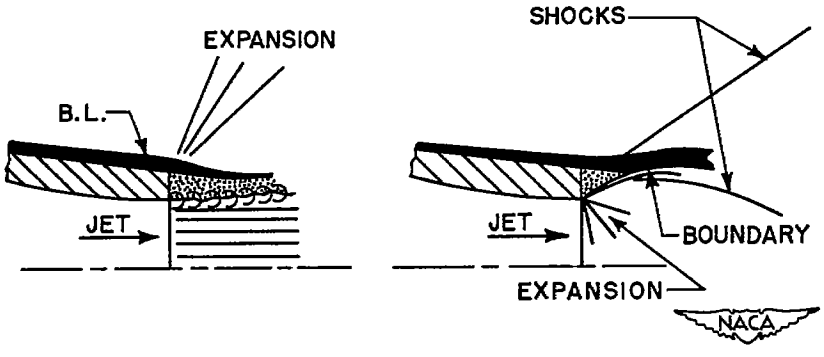

(a) (b)

Figure 4.- Interaction of jet and external stream at low and high pressure ratios.

Security Classification of This Report Has Been Cancelled

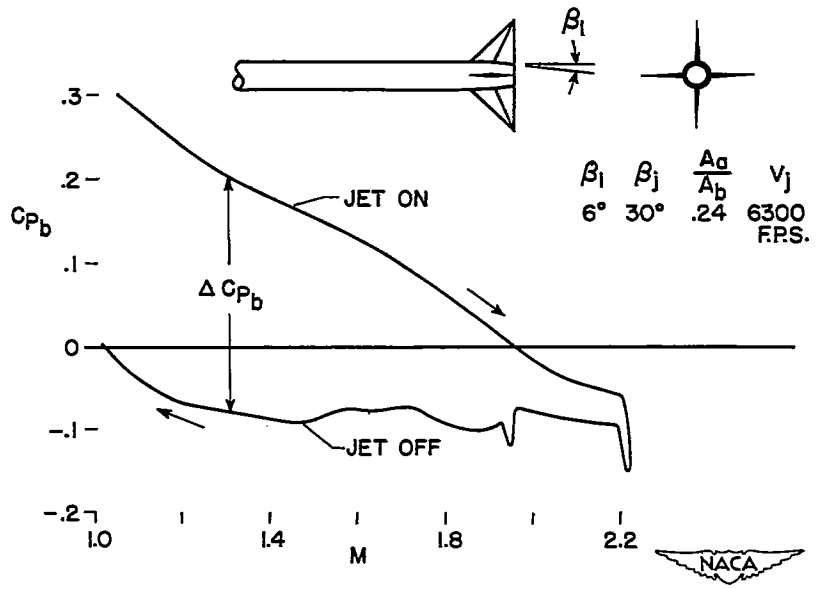

(a) Model with small base annulus.

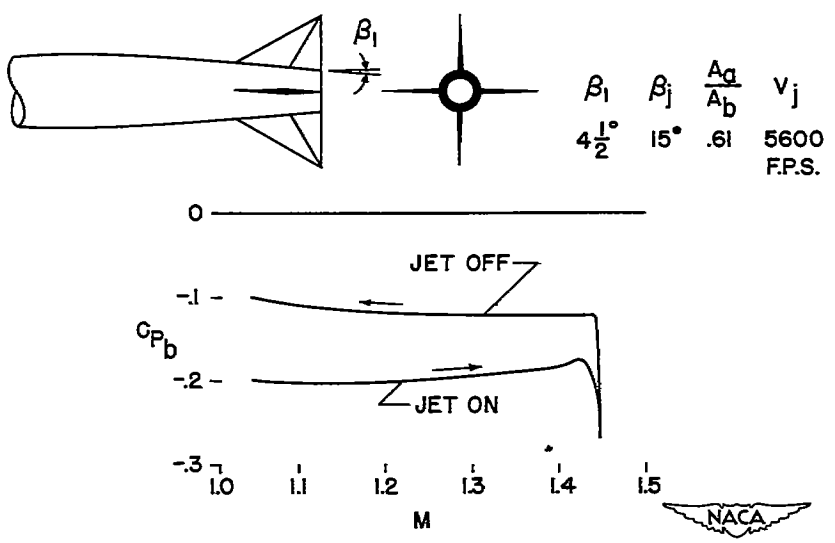

(b) Model with large base annulus.

Figure 5.- Base annulus pressure coefficients for two rocket models.

Security Classification of This Report Has Been Cancelled

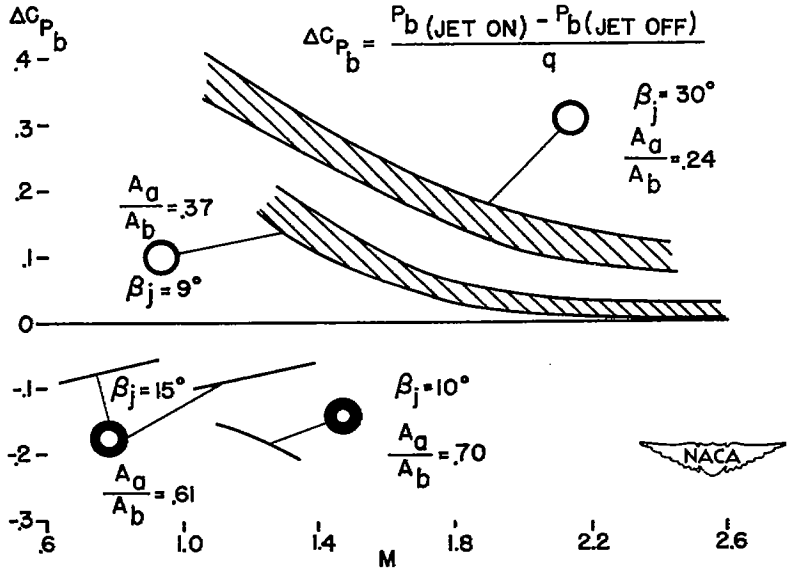

Figure 6.- Summary of incremental base annulus pressure coefficients obtained by some rocket models.

Security Classification of This Report Has Been Cancelled

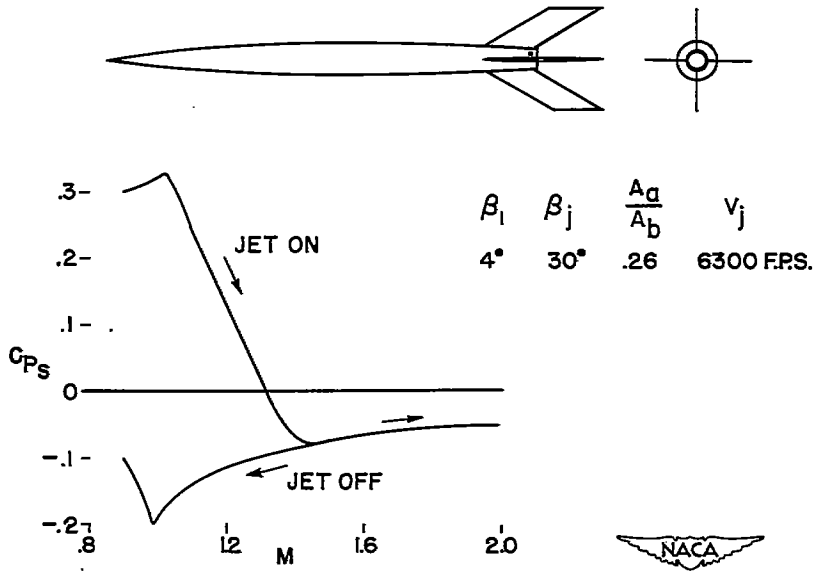

(a) Variation with Mach number of side pressure coefficient just forward of base.

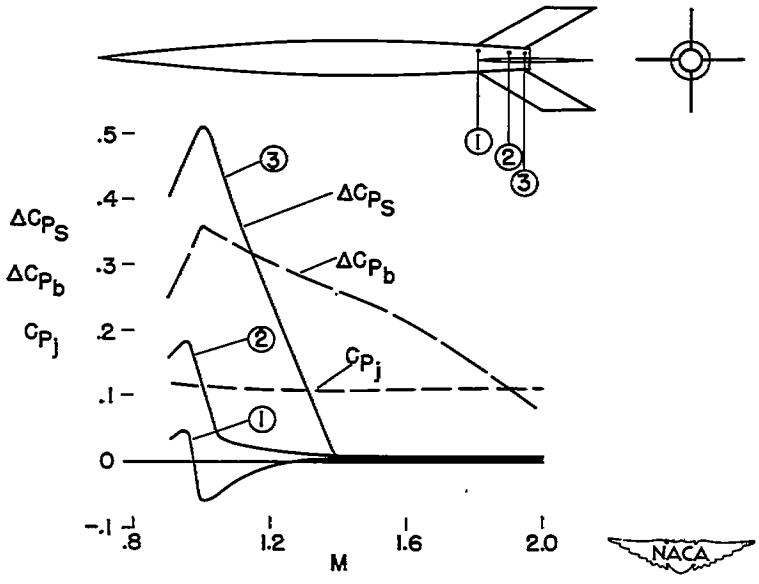

(b) Incremental side and base pressure coefficients and jet-exit static-pressure coefficient.

Figure 7.- Jet effects at rear body stations of an RM-10 rocket model.

Security Classification of This Report Has Been Cancelled

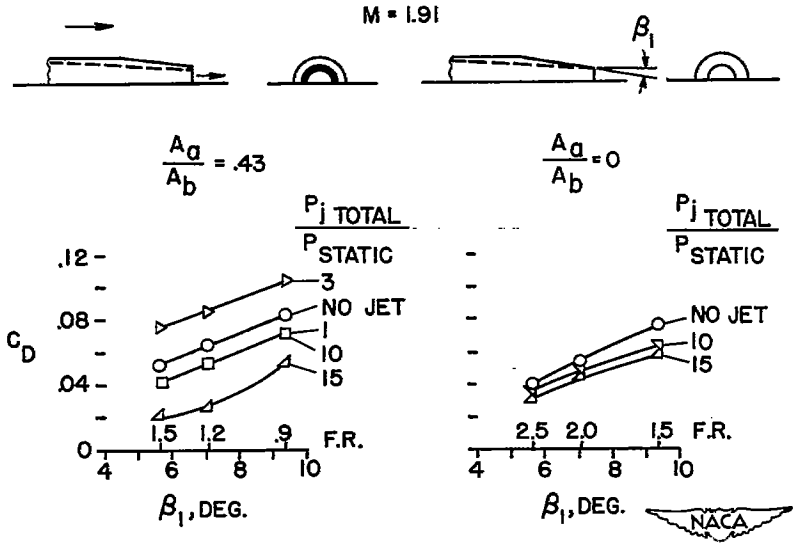

Figure 8.- Jet effect on pressure drag of afterbodies with and without a base annulus. M = 1.91.

NACA-Langley - 11-9-51 - 325