NACA TN 2238

NATIONAL ADVISORY COMMITTEE FOR AERONAUTICS

TECHNICAL NOTE 2238

EFFECTS ON LONGITUDINAL STABILITY AND CONTROL CHARACTERISTICS OF A B-29 AIRPLANE OF VARIATIONS IN STICK-FORCE AND CONTROL-RATE CHARACTERISTICS OBTAINED THROUGH USE OF A BOOSTER IN THE ELEVATOR-CONTROL SYSTEM

By Charles W. Mathews, Donald B. Talmage,
and James B. Whitten

Langley Aeronautical Laboratory
Langley Field, Va.

FOR REFERENCE

NOT TO BE TAKEN FROM THIS ROOM

Washington
February 1951

LIBRARY COPY

MAY 6

LANGLEY RESEARCH CENTER
LIBRARY NASA
HAMPTON, VIRGINIA

3 1176 01433 9718

NATIONAL ADVISORY COMMITTEE FOR AERONAUTICS

TECHNICAL NOTE 2238

EFFECTS ON LONGITUDINAL STABILITY AND CONTROL CHARACTERISTICS OF A B-29 AIRPLANE OF VARIATIONS IN STICK-FORCE AND CONTROL-RATE CHARACTERISTICS OBTAINED THROUGH USE OF A BOOSTER IN THE ELEVATOR-CONTROL SYSTEM

By Charles W. Mathews, Donald B. Talmage,
and James B. Whitten

SUMMARY

The longitudinal stability and control characteristics of a B-29 airplane have been measured with a booster incorporated in the elevator-control system. Tests were made to determine the effects on the handling qualities of the test airplane of variations in the pilot's control-force gradients as well as the effects of variations in the maximum rate of control motion supplied by the booster system.

The variations of elevator-control force with normal acceleration for the test airplane without boost were about 90 pounds per g at an indicated airspeed of 160 miles per hour and about 140 pounds per g at 250 miles per hour. These control forces were considered by the pilots to be tolerable but heavy. Use of the booster to reduce these control-force gradients by a factor of about 2.8 appreciably improved the control characteristics of the test airplane. Reduction of the force gradients by a factor of about 4.6 through use of the booster also resulted in satisfactory control characteristics in terms of the pilots' opinions of their ability to control the airplane precisely in normal flight maneuvers, although these force gradients were not so desirable as with the boost ratio of 2.8. The effect of these lower force gradients on the probability of exceeding the limit load factor could not be investigated.

The results of the control-rate investigation indicate that large airplanes may have satisfactory handling qualities with the booster adjusted to give much lower rates of control motion than those normally used by pilots. During landings of the test airplane, high rates of control motion were used by the pilots both without the booster and with the booster operating under conditions where high control rates were available from the system, but other landings, which were made with the

rate of elevator motion restricted to values as low as 7° per second, were satisfactory from the standpoint of the pilots' opinions of the handling qualities of the airplane.

INTRODUCTION

There is a current trend to the use of booster systems for operating the control surfaces of airplanes. The use of boosters results primarily from a need for alleviating the large control forces associated with large airplanes, for improving the maneuvering capabilities of high-speed fighter airplanes where control deflections are limited by the physical capabilities of pilots, and for improving the control-force characteristics where the aerodynamic hinge moments of the control surfaces have unsatisfactory variations.

Because the requirements for boosters involve consideration of the airplane and the pilot, the National Advisory Committee for Aeronautics has undertaken a flight investigation of a booster system installed in the elevator-control system of a B-29 airplane. An analysis and bench test of this booster are presented in reference 1.

When boosters are used, two alternatives exist with regard to the provision of pilot's control forces. For many systems a given percentage of the aerodynamic hinge moment on the control surface is fed back to the pilot's stick while for other systems, where the aerodynamic hinge moments have unsatisfactory variations, no feedback of the aerodynamic forces is provided and the stick forces are created mechanically. The present investigation was concerned with the type of system which provides for a feedback of the aerodynamic forces. The test booster system had provision for varying the magnitude of this force feedback over a wide range, and the effects of the magnitude of the pilot's stick forces on the handling qualities of the test airplane were investigated.

Another important booster parameter affecting airplane handling qualities is the maximum rate of control motion supplied by the system. The test booster had provisions for varying the maximum available control rate, and the effects of such variations were investigated.

Measurements of the longitudinal stability and control characteristics were obtained for the test airplane both without the booster and with the booster operating to provide various stick-force and control-rate characteristics. Results obtained from these measurements are presented herein.

SYMBOLS

F_e elevator-control force

q_c impact pressure

δ_e elevator deflection

C_N normal-force coefficient

n limit load factor

BOOSTER INSTALLATION

A description of the booster and a discussion of its operation are given in reference 1. The schematic arrangement of the system is shown in figure 1 and a photograph of the test unit is shown in figure 2. The booster was installed on the pilot's side (left side) of the elevator-control system of the B-29 airplane. The orientation of the booster in the airplane is shown in figure 3. This booster system had been tested previously as a bench setup. Results of these bench tests, reported in reference 1, show that this system is satisfactorily free from chatter, dead spots, excessive lag, friction, and other undesirable characteristics which might adversely affect the pilots' opinions of the handling qualities of the test airplane.

Several important features of the flight-test version of the booster system are not described in reference 1. With regard to variations in the magnitudes of the control forces, the part of the total elevator hinge moment fed back to the pilot was made adjustable through use of a manual control. The ratio of total control force to pilot-held force (boost ratio) is equal to the ratio of the length l to the length d shown in figure 1, and the manual control changed the boost ratio by varying the position of the point A shown in figure 1. With regard to variations in maximum available control rate, this booster is built around a variable-displacement hydraulic pump and operates so that the velocity of the control surface is proportional to the error in position between the control surface and the stick. The flight-test version of the booster was rigged so that a $1\frac{1}{2}^{\circ}$ error in position (referred to the stick) would produce the maximum available flow of fluid from the pump. This condition corresponds to the maximum rate of control motion when the control rate is not restricted by other means that are discussed subsequently. Mechanical stops (see fig. 1) were placed in the system so that when

this $1\frac{1}{2}^{\circ}$ error in position was attained, the stick could be moved no faster than at a rate corresponding to the maximum of the system (an elevator rate of 100° per second with no restriction). In addition to these fixed stops, a set of adjustable stops were placed on the pump control arm as a means for further restricting the maximum control rate. The push-pull rod to the pump control arm was not rigidly attached but was attached with a preloaded spring arrangement. This device was used so that, in spite of a rate restriction, the pilot could still move his stick (against the spring force) at any rate desired until the fixed stops were contacted $\left(1\frac{1}{2}^{\circ}\right.$ error in stick position$\left.\right)$. These springs were preloaded to $8\frac{1}{2}$ pounds as measured at the stick. The ratio between motions of the control arm and the stick was 15 radians per radian.

A set of centering springs was installed on the pump control arm to prevent a small residual oscillation from occurring in the boost system. This oscillation has been encountered during bench tests (see reference 1) and was eliminated through use of centering springs. These springs, which supply a damping force at the stick proportional to the rate of control motion, had a constant of 0.06-pound stick force per degree per second rate-of-control motion. A small dashpot type of viscous damper was connected to the control arm in order to smooth further the action of the servovalve which operated the pump. The damper applied 0.065 inch-pound torque to the control arm per degree per second rate of motion of the control arm. The torque on the control arm required to overcome the static friction in the servovalve was 0.047 inch-pound. The force required at the stick to overcome the friction in the linkages to the control arm was approximately 1/4 pound. Installation of a control-position pickup on the pump control arm, however, increased the friction present at the stick to about $1\frac{1}{2}$ pounds. This control-position pickup also increased the constant of the centering springs by a small amount. The electric motor used to drive the variable-displacement pump of the booster unit is rated at 2 horsepower and 4000 rpm. The pump delivers about 3.3 gallons per minute at maximum displacement and the maximum operating pressure is 1250 pounds per square inch. The estimated increase in the gross weight of the test airplane resulting from installation of the booster unit is 80 pounds; however, no particular effort was made to minimize the weight of the installation.

The booster output was applied to a quadrant beneath the pilot's stick and operated the elevator through the cable system in the airplane. (See fig. 3.) A cam-operated cable clamp was used as a safety device so that the pilot's cable system could be disconnected from the quadrant in event of boost failure. Use of this device was possible because the cable systems to the elevator from the pilot's and copilot's stick are independent in the B-29 airplane. In addition, a manually operated hydraulic bypass was provided.

The longitudinal control system of the test airplane was selected for the booster investigation because elevator-force variations were felt to be the most critical from handling-qualities considerations and because rate-of-elevator movement is important at least during landings and take-offs. The B-29 airplane was chosen for these tests because it represents a large airplane having inherent elevator-force variations that are satisfactory, but having elevator forces that are somewhat high in relation to the present handling-qualities requirements. The test airplane was flown at a gross weight of about 108,000 pounds and with the center of gravity at about 25 percent of the mean aerodynamic chord. A three-view drawing of the B-29 airplane is presented in figure 4, and some general specifications of the airplane are listed in table I.

INSTRUMENTATION AND MEASUREMENTS

Standard NACA instruments were used. The following table presents a list of these instruments and the quantities that were measured:

Measured quantity	NACA instrument
Stick position	Mechanical control position recorder
Elevator position	Electrical control position recorder
Booster-control-arm position	Mechanical control position recorder
Stick quadrant position	Mechanical control position recorder
Elevator-control force	Strain-gage wheel force recorder
Booster hydraulic pressure	Hydraulic pressure recorder
Airspeed	Airspeed recorder and indicator
Normal acceleration	Recording and indicating normal accelerometers
Pitching velocity	Pitch turnmeter
Time	Timer sychronizing all records

The airspeed system utilized in these tests was the service system of the airplane. The flush static orifices of this system are located on the side of the fuselage just rearward of the pilot's cockpit. These orifices were calibrated for position error through use of an NACA trailing airspeed head. The airspeed used herein corresponds to the reading of a standard Air Force-Navy indicator connected to a pitot-static head which

is free from position error. This airspeed is equal to true airspeed under standard sea-level conditions.

RESULTS AND DISCUSSION

General.- An initial phase of the investigation was concerned with tests to determine whether the incorporation of the booster system in the B-29 airplane altered the control characteristics in any way other than to change the magnitude of the control forces.

The measured static longitudinal stability characteristics of the test airplane are presented in figure 5 for conditions of boost ratio 1 (no boost), boost ratio 2.8, and boost ratio 4.6 where boost ratio is defined as the ratio of the total control force to the control force held by the pilot. In the figure, pilot's elevator force divided by impact pressure F_e/q_c and elevator deflection from neutral δ_e are plotted against airplane normal-force coefficient C_N. Results measured in steady flight for the clean condition are shown in figure 5(a), and corresponding results are presented in figure 5(b) for the landing condition.

As would be expected, no alterations in stick-fixed characteristics (δ_e against C_N) resulted from use of the booster. Although the elevator-force variations with normal-force coefficient were reduced approximately in inverse proportion to the boost ratio, the general behavior of these variations was not significantly altered by the booster. Note, for example, that the results for the clean condition (fig. 5(a)), both with and without boost, show that the control forces tended to lighten as the stalling speed was approached. The flight data obtained from these static-stability tests showed appreciably more scatter with boost off than with boost on particularly at high normal-force coefficients (low speeds). The difference in the scatter obtained between boost-on and boost-off tests is a reflection of the fact that the pilots could attain and hold a given trim speed more easily with the booster operating. This scatter is probably caused by the large magnitude of the friction present in the elevator-control system of the test airplane (about 25 lb when measured on the ground). This friction was reduced along with the aerodynamic forces through use of the booster.

In order to determine whether the booster altered the control characteristics of the test airplane under conditions of rapid control movements or with the controls free, a series of abrupt pull-ups were made, each followed by release of the control stick. These maneuvers were made both with boost ratio 2.8 and without boost. The available rate of control motion for the tests with boost on was 100° per second. Time histories of the airplane motions, control motions, and control

forces obtained during these tests at an indicated airspeed of 160 miles per hour are presented in figure 6(a) and time histories obtained at 250 miles per hour are presented in figure 6(b). The curves showing the rate of control motion presented in the time histories with boost on were determined from measurements of the position of the pump control arm which is proportional to control rate. Similar variations were not obtained for the boost-off tests because the method of measurement was not applicable to the direct control system.

Comparison of the boost-off and boost-on time histories at both airspeeds shows that the pilot applied a much more abrupt control deflection when working against the smaller forces encountered with the booster in operation. In both cases the pilot intended to apply control as abruptly as possible. Even for the rapid control motions used in the boost-on tests, no appreciable lag existed between motion of the stick and the control surface. (See fig. 6.) For the abrupt pull-up at 160 miles per hour with boost ratio 2.8 the stick-force variation shown in figure 6(a) exhibits a peak which is not present for the pull-up without boost. This force peak, which is in phase with the rate of control motion, results at least in part from the use of centering springs on the pump control arm. This component of the control force opposes the control velocity. The force is of significant magnitude only when this rate of control motion is very high as may be seen by the lack of this force peak for the abrupt pull-up, boost on, at 250 miles per hour where the stick was moved at a slower rate. This characteristic was not objectionable to the pilots. Results of other handling-qualities investigations have indicated that such forces may be advantageous since a more adequate warning of possible large normal accelerations is presented to the pilot whenever control is applied rapidly. Another point worth noting from these time histories is that the largest control rate used by the pilot, when he purposely attempted to apply abrupt control, was about 70° per second.

The stick-free dynamic characteristics of the test airplane are also indicated by the time histories presented in figure 6. For both airspeeds and for both boost conditions, the motions of the controls and airplane following release of the stick were deadbeat. At an indicated airspeed of 160 miles per hour, both with and without boost, the elevator did not return to its trim position following release of the stick. This condition results from the aforementioned control friction and, since the friction exists between the booster and the elevator, the use of boost does not affect the centering tendency. At higher speeds the centering tendency of the elevator was much improved because of the larger magnitude of the aerodynamic hinge moments in relation to the control friction. (See fig. 6(b).)

Control-force investigation.- The variations of elevator force with normal acceleration (in g units) as measured in turns are presented in

figure 7 for various values of boost ratio. Variations are shown for indicated airspeeds of 160, 200, and 250 miles per hour in figures 7(a), 7(b), and 7(c), respectively.

The use of the booster in the B-29 airplane decreased the elevator-force gradients in approximately inverse proportion to the boost ratio but otherwise did not significantly affect the control characteristics of the test airplane in steady turning flight. As indicated in figure 7, the control-force gradients of the test airplane increased with increasing airspeed. Without boost and at an indicated airspeed of 250 miles per hour, the force gradient is about 140 pounds per g normal acceleration; whereas at 160 miles per hour the force gradient is about 90 pounds per g. The pilots conducting these tests felt that the control forces encountered without boost were tolerable but heavy. The large force gradients at high speeds contribute to pilot fatigue when flying in formation, flying through rough air, or flying under other conditions where frequent control applications are required. The decrease in force gradient with decreasing airspeed, however, had the advantage of improving the handling qualities of the test airplane during landings over those existing for several other large airplanes. Because of this decrease with speed, the test airplane with boost off could be landed with one hand on the control wheel and without the necessity for retrimming when the power is cut prior to ground contact although the forces were high under this condition.

With the booster operating at boost ratio 2.8 the control-force gradients measured in turns were reduced to about 30 pounds per g at 160 miles per hour and to about 50 pounds per g at 250 miles per hour. In the opinion of the test pilots, force gradients of these magnitudes were much more desirable than those encountered without boost. The maximum permissible normal acceleration could be obtained at high speed without an objectionally large amount of pilot effort, but the gradients were still large enough to provide the pilot with adequate control feel. The longitudinal control characteristics of the airplane during landings were considered excellent. With the lower force gradients, the pilots found that errors in the approach just prior to ground contact were easier to correct so that good "touchdowns" could be made even with relatively poor approaches.

As shown in figure 7, use of boost ratio 4.6 resulted in force gradients of the test airplane of about 30 pounds per g at 250 miles per hour and about 20 pounds per g at 160 miles per hour. The pilots, however, still considered force gradients of these magnitudes satisfactory and, although these gradients were not so desirable as those obtained with boost ratio 2.8, they were more desirable than the gradients obtained without boost from consideration of the handling qualities. Possibly this opinion might have been altered if the force gradients of the test airplane had not increased with speed. This contention is borne out to

some extent by the test results for boost ratio 8.2; under this condition, the force gradient was about 17 pounds per g at 250 miles per hour, but the gradients were considered undesirably light by the pilots throughout the speed range of the tests.

The control-force gradients specified as satisfactory in present handling-qualities requirements for the airplane class which includes the test airplane are given in the following form (reference 2):

$$\text{Maximum force per g } \frac{120}{n - 1}$$

$$\text{Minimum force per g } \frac{45}{n - 1}$$

where n is defined as the limit load factor and is included as an integral part of the specification in an attempt to compensate for differences in the strength of airplanes. The relationship between the specified force gradients and those that were measured for the test airplane is somewhat vague in that the limit load factor varies with gross weight. The limit load factor of the test airplane is 3g at the design gross weight of 105,000 pounds but is reduced to 2.67g at 120,000 pounds (a more normal operating gross weight). With either limit load factor, however, the force gradients for the test airplane without boost are appreciably above the upper specified limit; whereas, with a boost ratio of 2.8, the force gradients are entirely within the specified limits. The force gradients of the test airplane with a boost ratio of 4.6 were near or somewhat below the lower specified limit.

The effect of low force gradients on the probability of exceeding the limit load factor during abrupt evasive maneuvers was not investigated because an evaluation of this effect would require an extremely great amount of flight experience with airplanes having low force gradients. For airplanes with very low limit load factors, the range of control-force gradients dictated by handling-qualities considerations may tend to endanger the structural integrity of the airplane; for this case, an immediate need is indicated for a means of load limitation other than the control-force gradients encountered in normal flying.

The effect of the magnitude of the elevator-control force gradients on the handling qualities of the test airplane during landings is indicated in figure 8. Time histories of three landings are presented. A landing without boost is shown in figure 8(a), a landing with boost ratio 2.8 is shown in figure 8(b), and a landing with boost ratio 4.6 is shown in figure 8(c).

The time histories indicate that pilot technique in performing landings is similar regardless of the magnitude of the control forces.

In general, control was applied during the test landings by a series of abrupt applications of pull force followed almost immediately by a partial release of the force without actually pushing on the stick. The peak pull forces which were applied during the landings without boost were generally about 80 pounds. This peak value is high in terms of the physical capabilities of a normal pilot when using one hand for control application. Because control was applied in an almost continuous series of abrupt force applications, the magnitude of these peak forces is also indicative of appreciable work required on the part of the pilot.

During the landing with the booster operating at boost ratio 2.8 (fig. 8(b)) the peak pull forces used were about 40 pounds. Although the peak force reduction over the condition of boost off is appreciable, the force reduction is not as great as would be expected from the difference in boost ratio. These results indicate that the pilot used larger elevator deflections to control the airplane when the forces were reduced. For the landing with boost ratio 4.6 the peak pull forces were about 20 pounds (fig. 8(c)) except immediately before ground contact where the pilot applied rapid corrective control. This characteristic of applying rapid corrections just before touchdown was noted for several other landings where the booster was used; however without boost, such action was rarely taken, apparently because the forces involved were large.

Control-rate investigation.- There are several additional results concerned with pilot technique during landings that are worth noting. As shown in figure 8, the largest rate of elevator motion involved in the abrupt control applications during landings was about 40° per second. In spite of these rapid control movements, however, the time histories show that the normal accelerations and pitching velocities were small and that abrupt control deflections were applied over such short time intervals that the flight path of the airplane was not significantly altered. These observations indicate that the rapid control application is merely a feature of pilot technique.

The preceding statements concerning the usual pilot control technique used in landings may have an important bearing on the maximum control rates that are required in a booster system. Since the airplane does not significantly respond to control applications applied over a short time interval, satisfactory landings could possibly be made with smoother control movements involving much lower rates of control motion. In order to investigate this possibility, a series of boost-on landings were made with the maximum control rate of the system restricted to low values. Time histories of three landings using restricted control rates in the booster system are presented in figure 9. Landings with rate restrictions of approximately 20°, 10°, and 7° per second are shown in figures 9(a), 9(b), and 9(c), respectively.

During landings with restricted control rates, the pilot invariably called for higher rates than were available just before ground contact. This condition is indicated in figure 9 by the dashed lines representing the maximum available control rate. For these conditions, the pilot moved the control stick faster than the rate at which the elevator was moved by the booster, but these differences in stick and elevator rate did not exist over a sufficiently long time interval to cause the pilot's stick to contact the fixed stops in the system $\left(1\frac{1}{2}^{\circ}\text{ error in position}\right)$. The lag in the elevator motion even for the largest rate restriction was never large enough to be detected by the pilot in terms of the airplane response.

Also indicated by the time histories in figure 9 is a progressive reduction in the rate which the pilot moved the stick as the available elevator rate was reduced, even though the stick could be moved at any desired rate within the fixed stop limits. This result apparently stems from the force feedback of the preloaded springs which connected the push-pull rod to the pump control arm. These springs deflected whenever rates higher than the maximum available were called for by the pilot. Although this force feedback was not objectionable to the pilots, there is a possibility of making this force feedback small (weak springs) and eliminating the fixed stops in the system. With such modifications the pilot could move the stick without limit at any rate even though the system rate was restricted. The pilot would then have no indication of a restricted rate of control motion unless the restriction could be detected in the response of the airplane.

With the system as used for the present tests, the pilots felt that the handling qualities of the airplane were satisfactory even with the control rate restricted to the lowest value of 7° per second. As mentioned previously, some detection of the rate restriction was possible because of the forces applied by the preloaded springs. Apparently no real sense of lack of control was encountered, however, possibly because the pilot could continue to move the stick against the spring force.

During several landings with restricted control rates the pilot intentionally started the landing flare well off the ground and had to correct for this error. Other landings were made in which the flare was delayed beyond the point where it would normally have been initiated. Even with the lowest available control rates used in these tests no complications were involved in correcting for these conditions.

Although results are presented herein only for landings, which were felt to be the most important maneuver from the standpoint of rate of elevator motion, the handling characteristics of the test airplane with restricted control rates were qualitatively investigated for other flight conditions. No unsatisfactory characteristics were evident during

normal take-offs where the control stick is held forward until take-off speed is approached, and then gradually pulled back to lift the nose wheel. Another take-off technique was also investigated as being more critical than the normal procedure. For this test, the stick was held full back from the beginning of the take-off run. Under these conditions, the airplane has an unstable pitching tendency when the nose wheel rises off the ground, but even with the lowest available rate of elevator motion, the pilot experienced no difficulty in controlling this pitching tendency. During the tests, the pilots could easily contact the fixed stops $\left(1\frac{1}{2}^{\circ}\text{ error in stick position}\right)$ during taxying and also in flight by purposely moving the stick in an abrupt manner. In normal maneuvers, other than landings, however, the elevator rates used did not exceed a value corresponding to the greatest rate restriction of 7° per second.

The results of this investigation indicate that airplanes may have satisfactory handling qualities with a booster having much lower control rates available than those normally used by pilots. These results, however, are not intended to provide a quantitative indication of minimum satisfactory control rates since they apply strictly to the test airplane in the configurations used in the tests. The static-stability characteristics of the test airplane shown in figure 5 indicate that at the test center-of-gravity position only moderate variations of elevator deflection with normal-force coefficient were required. Possibly with a more forward center-of-gravity position somewhat larger control rates would be necessary in order to provide satisfactory control characteristics. In addition, past handling-qualities experience on other airplane types indicates a possibility that higher rates of control motion would be required on smaller airplanes.

CONCLUSIONS

Measurements of the longitudinal stability and control characteristics of a B-29 airplane have been made with a control-surface booster incorporated in the elevator-control system. Effects of variations in the magnitude of the pilot's control force were determined as well as effects of variations in the maximum rate of control motion supplied by the booster system. The following conclusions were drawn:

1. The longitudinal stability and control characteristics of the B-29 airplane were not significantly altered through use of the booster except for a reduction in the magnitude of the control-force gradients.

2. The elevator control-force variations with normal acceleration for the B-29 airplane without boost were about 140 pounds per g at an indicated

airspeed of 250 miles per hour and about 90 pounds per g at 160 miles per hour. The pilots conducting these tests felt that the control forces without boost were tolerable but heavy.

3. Use of the booster to adjust the control-force gradients to about 50 pounds per g at 250 miles per hour and about 30 pounds per g at 160 miles per hour appreciably improved the handling qualities of the test airplane.

4. Further reduction in control-force gradients through use of the booster to about 30 pounds per g at 250 miles per hour and about 20 pounds per g at 160 miles per hour still provided satisfactory control forces in terms of pilots' opinions of their ability to control the airplane precisely in normal flight maneuvers. From consideration of the handling qualities these force gradients were more satisfactory than those encountered without boost but were not so desirable as the range stated in conclusion 2. The effect of these lower force gradients or the probability of exceeding the limit load factor could not be investigated.

5. The highest rate of elevator-control motion used by the pilots during landings of the test airplane was about 40° per second. The highest rate of control motion obtained when the pilot purposely moved the control rapidly in an abrupt pull-up was about 70° per second.

6. During the part of the landings where high control rates were used, large control deflections were held for such short time intervals that the flight path of the airplane was not significantly altered.

7. During boost-on landings with the available rate of control motion restricted to values as low as 7° per second, no unsatisfactory control characteristics were encountered. The pilots did not note any undesirable restrictions on their ability to move the control stick rapidly regardless of the rate of control motion available possibly because the stick could be moved at any rate desired (against light preloaded springs) until an error of $1\frac{1}{2}^{\circ}$ was attained between the stick and the control surface. This large a value of error was not encountered during these landings.

8. Qualitative investigation of other flight conditions such as take-offs and normal flying indicated that no unsatisfactory control characteristics resulted from restricting the rate of control motion to 7° per second.

Langley Aeronautical Laboratory
National Advisory Committee for Aeronautics
Langley Field, Va., April 12, 1950

REFERENCES

1. Mathews, Charles W., and Kleckner, Harold F.: Theoretical Analysis and Bench Tests of a Control-Surface Booster Employing a Variable Displacement Hydraulic Pump. NACA RM L6H30, 1946.

2. Anon.: Flying Qualities of Piloted Airplanes. U.S. Air Force Specification No. 1815-B, June 1, 1948.

TABLE I

GENERAL SPECIFICATIONS OF B-29 AIRPLANE

General:	
Manufacturer	Boeing Aircraft Corp.
Type	TB-29-56-BW
Engines:	
Manufacturer	Wright Aeronautical Corp.
Type	R3350-23A
Normal rating	2000 hp at 2400 rpm
Propellers:	
Manufacturer	Hamilton Standard
Hub No.	24-F60-35
Blade No.	6521A-6
Wing:	
Area (including ailerons), sq ft	1739
Area (flaps extended), sq ft	2071
Aspect ratio	11.5
Taper ratio	0.43
Aileron area (total), sq ft	129
Flap area, sq ft	332
Horizontal tail:	
Area, sq ft	333
Aspect ratio	5.55
Taper ratio	0.42
Elevator area, sq ft	115
Vertical tail:	
Fin area (including dorsal), sq ft	132
Rudder area, sq ft	65.5

NACA

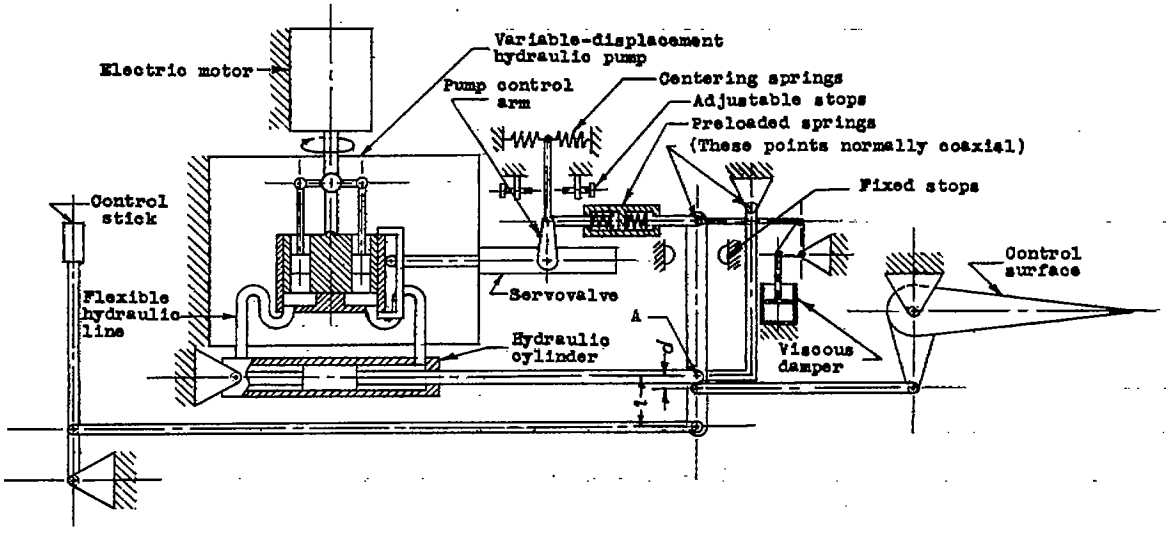

(a) Booster arrangement.

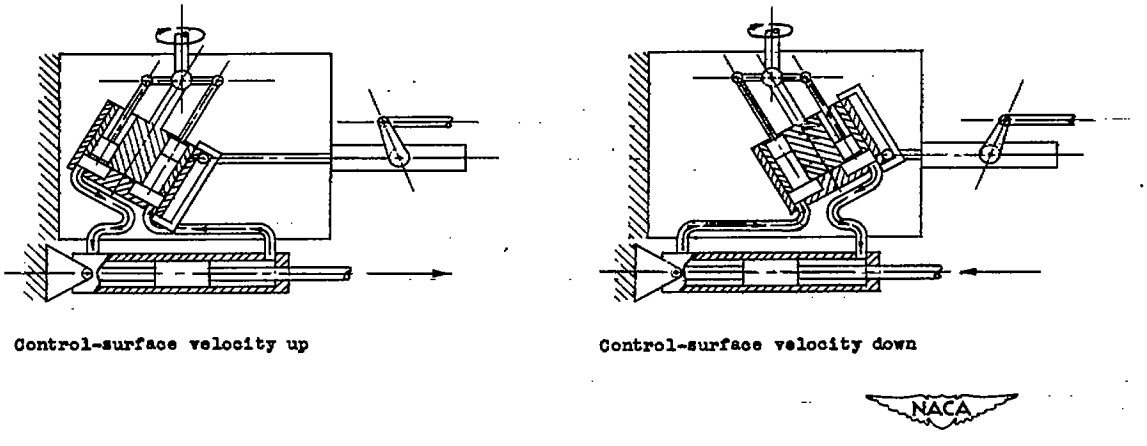

(b) Hydraulic-pump operation.

Figure 1.- Schematic arrangement of the booster unit used in the elevator-control system of the B-29 airplane.

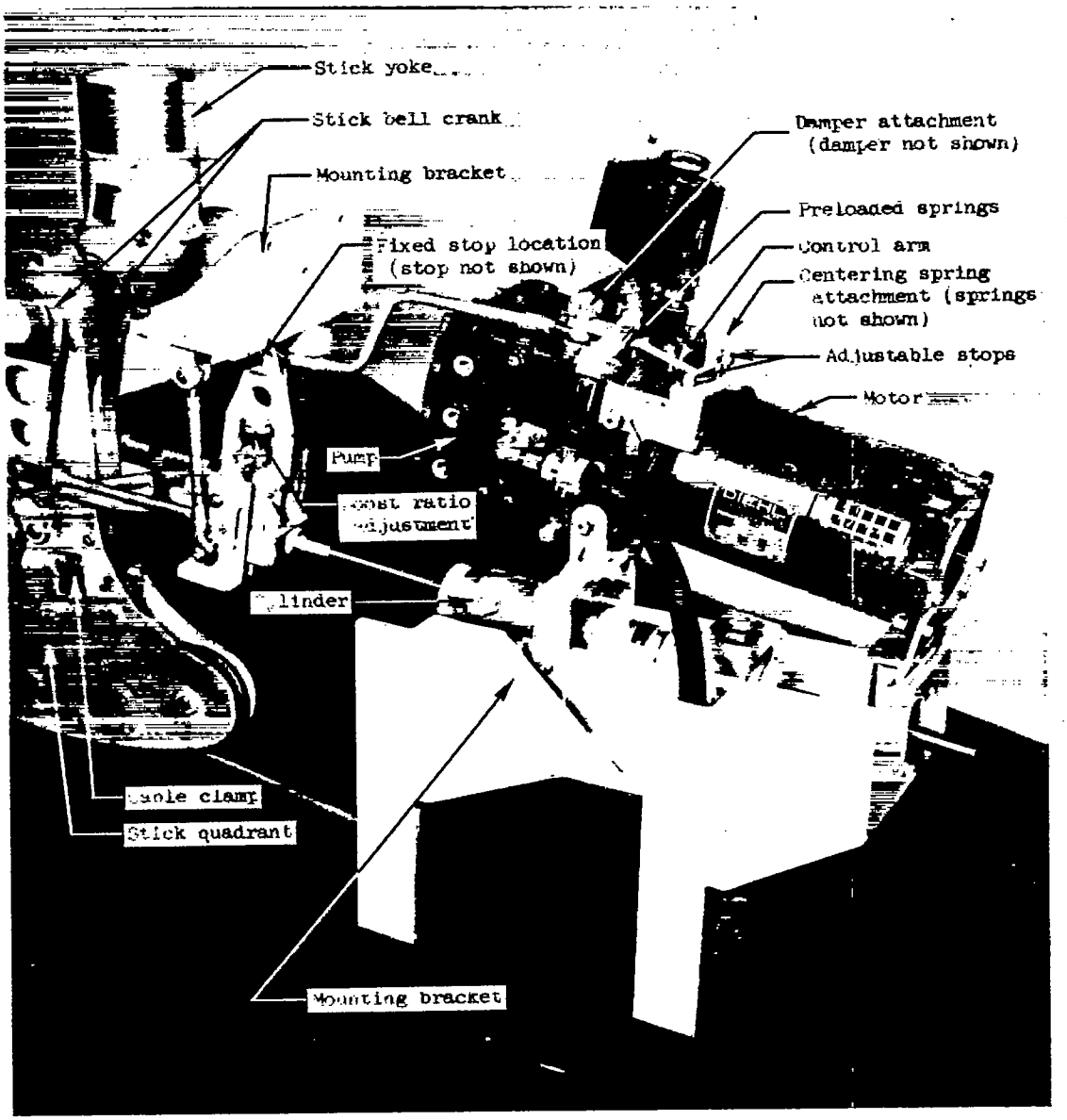

Figure 2.- The booster unit used in the elevator-control system of the B-29 airplane.

L-51240.2

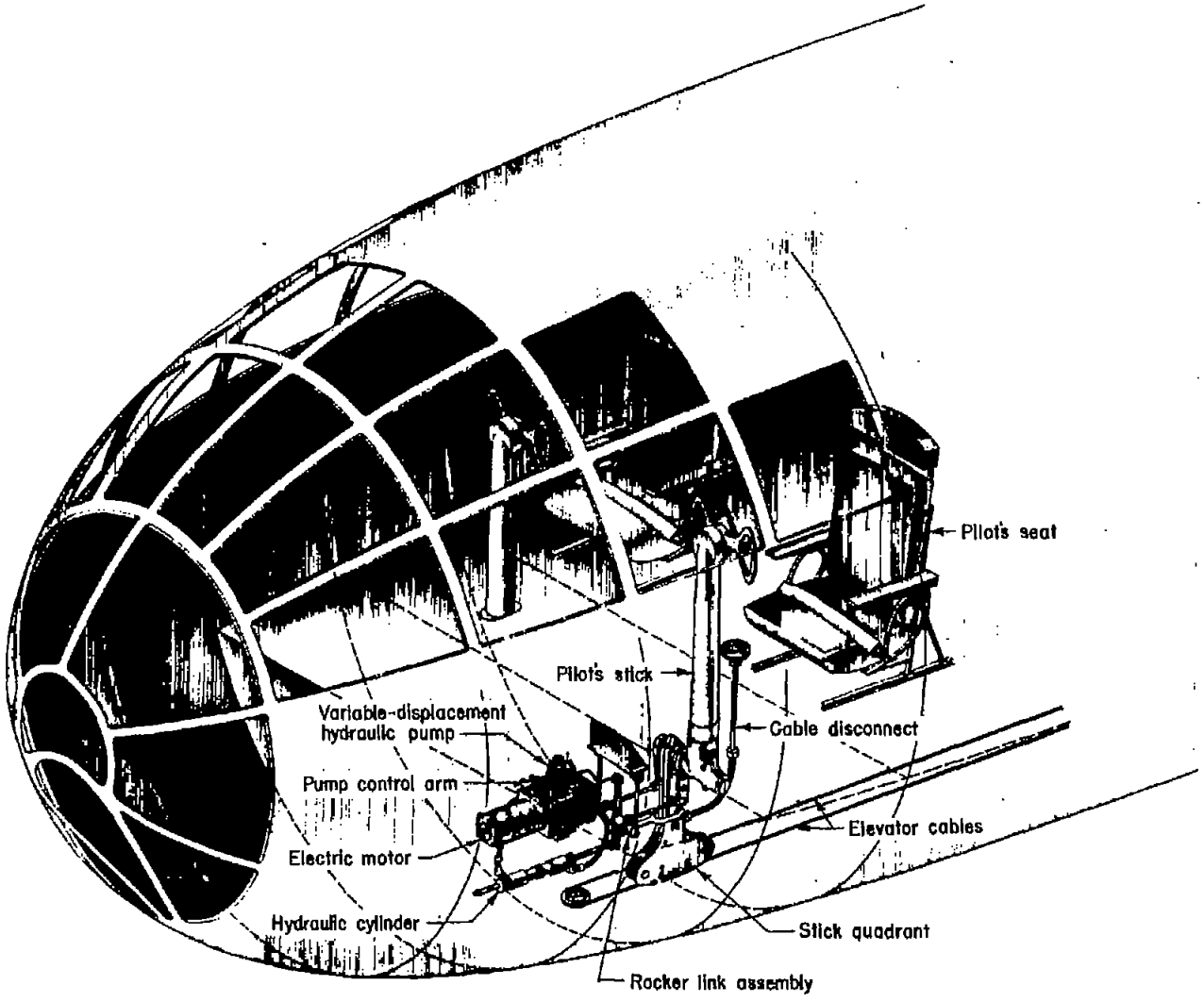

Figure 3.- Orientation of booster unit in B-29 airplane.

L-64873

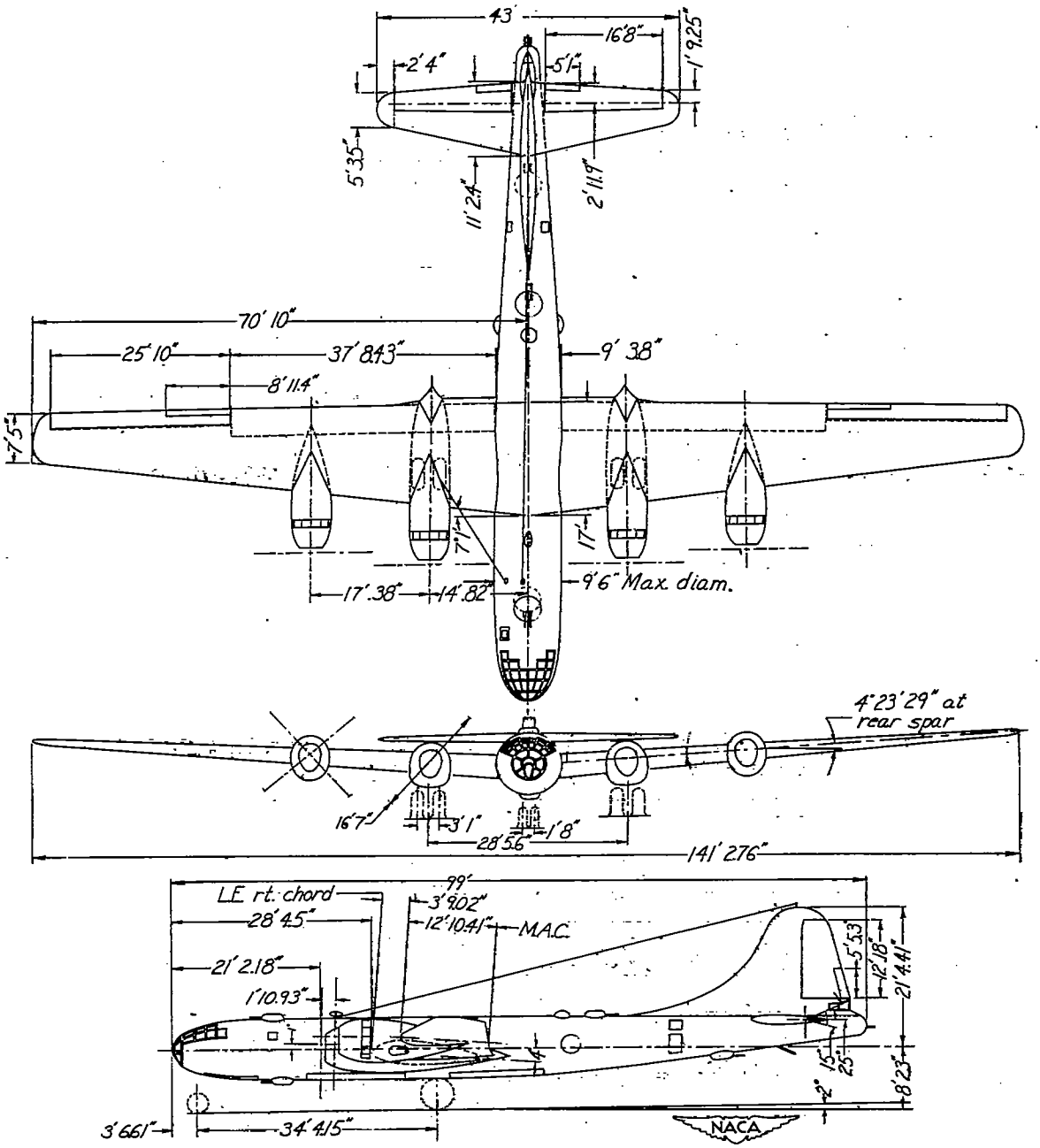

Figure 4.- Three-view drawing of B-29 airplane.

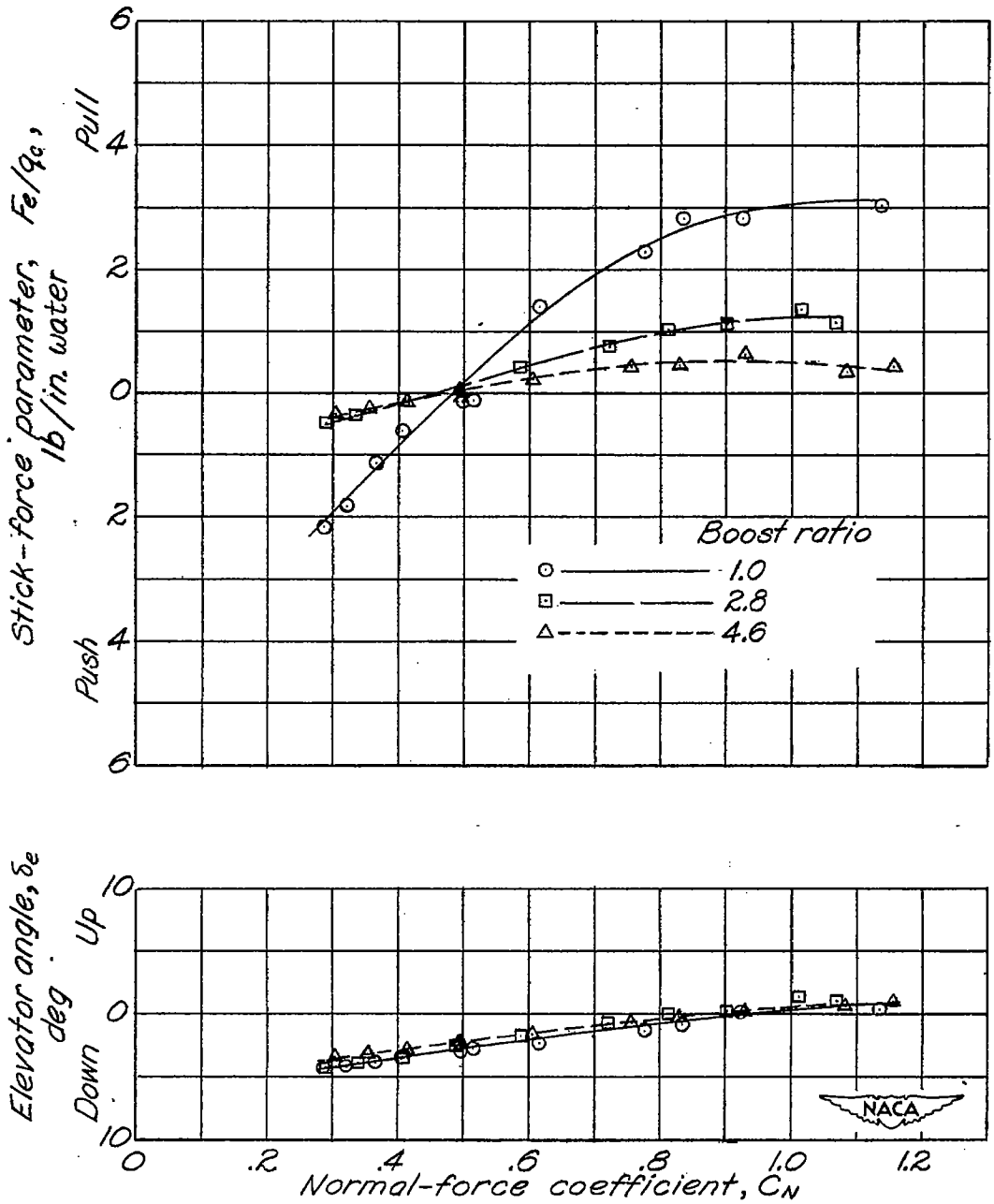

(a) Clean condition. Flaps and gear up; normal rated power.

Figure 5.- Effect of the booster on the static longitudinal stability characteristics of the B-29 airplane.

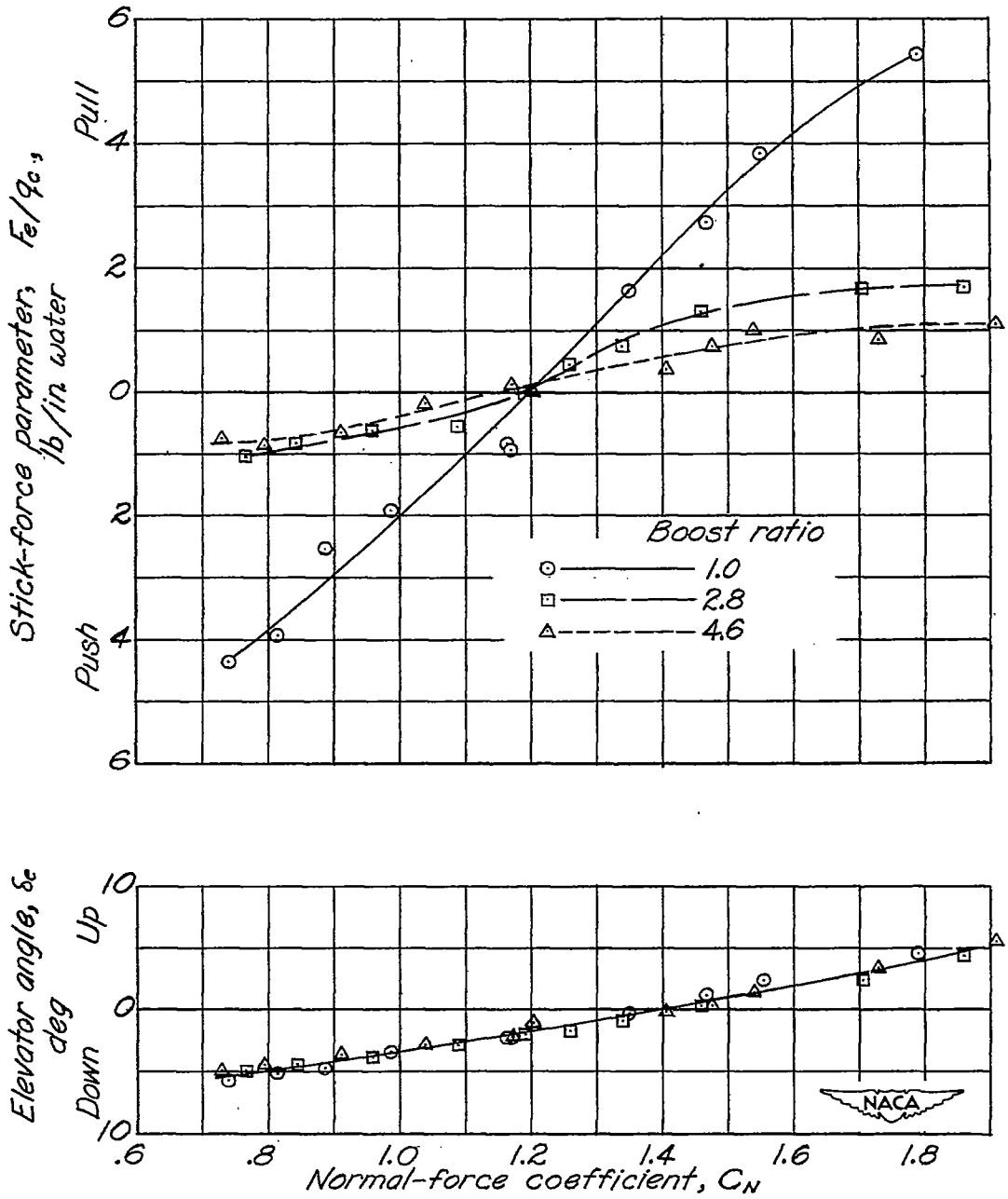

(b) Landing condition. Flaps and gear down; power off.

Figure 5.- Concluded.

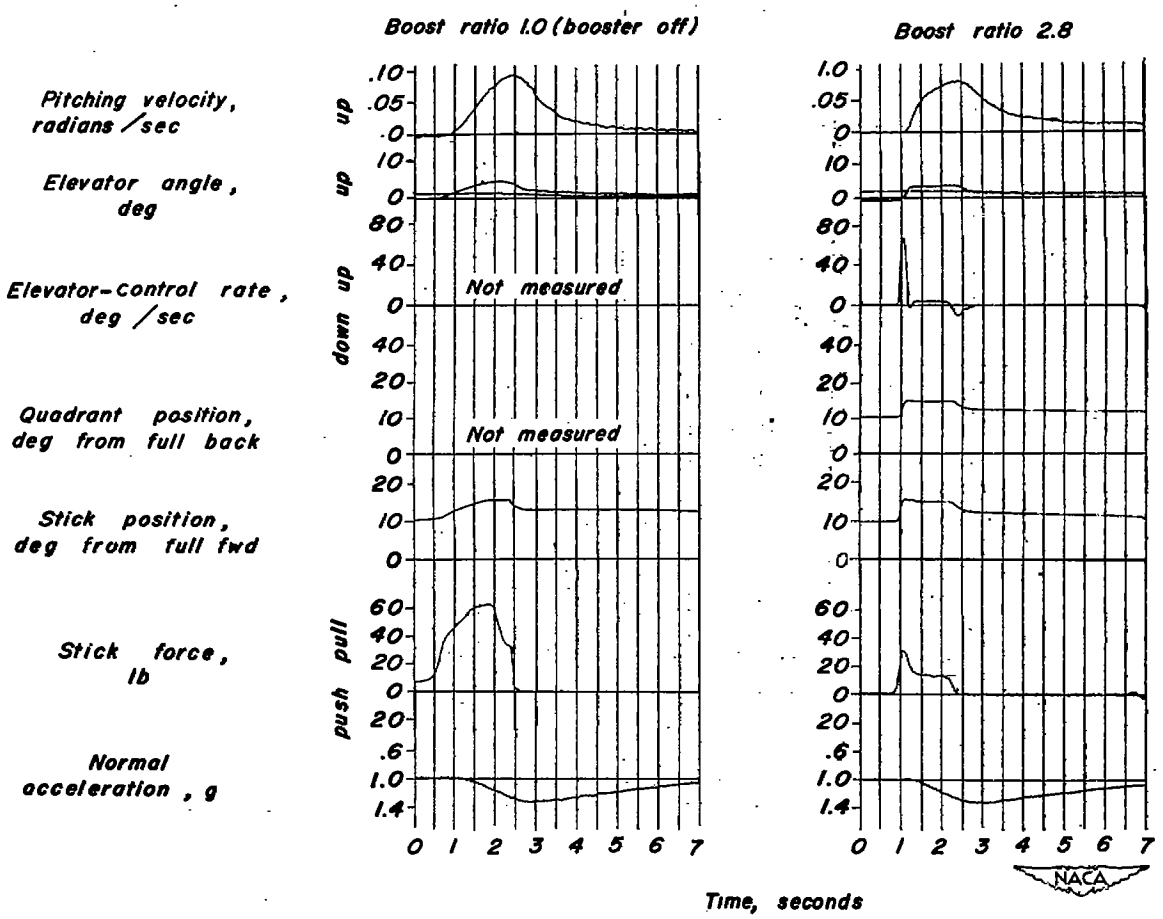

(a) Indicated airspeed; 160 miles per hour.

Figure 6.- Time histories of abrupt pull-ups of the B-29 airplane each followed by release of the control stick showing the effects of the booster.

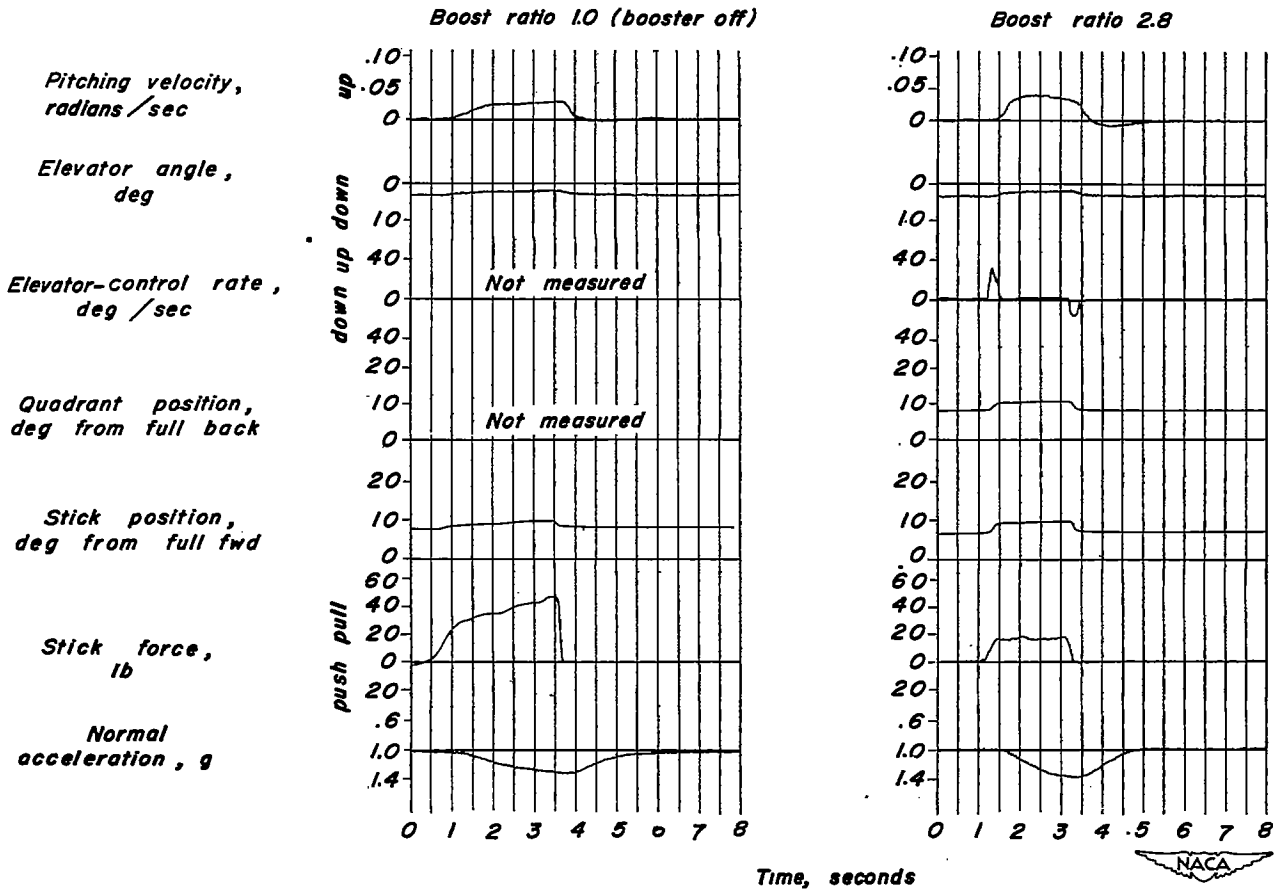

(b) Indicated airspeed; 250 miles per hour.

Figure 6.- Concluded.

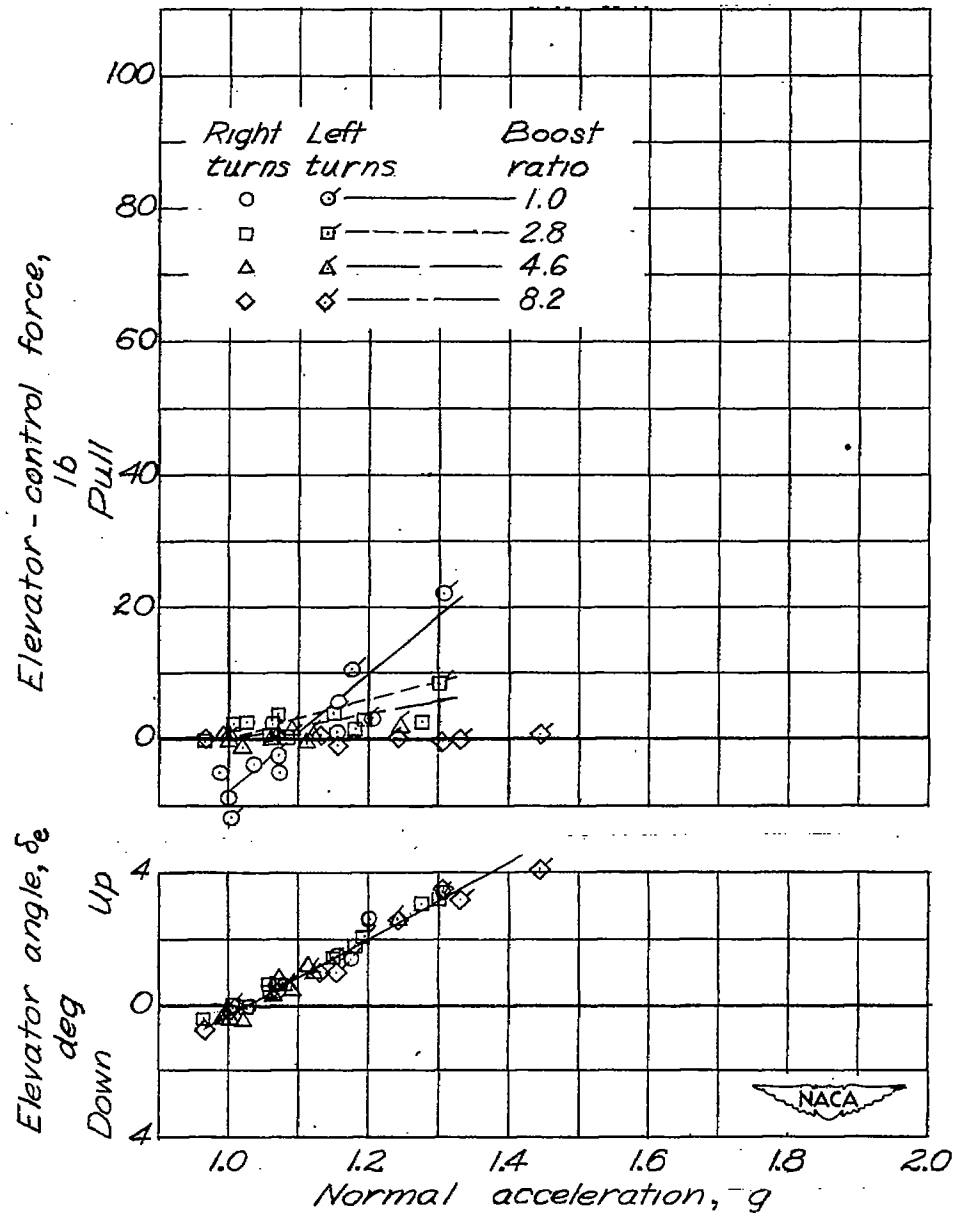

(a) Indicated airspeed; 160 miles per hour.

Figure 7.- Effect of the booster on the variation of elevator-control force with normal acceleration for the B-29 airplane as measured in turns.

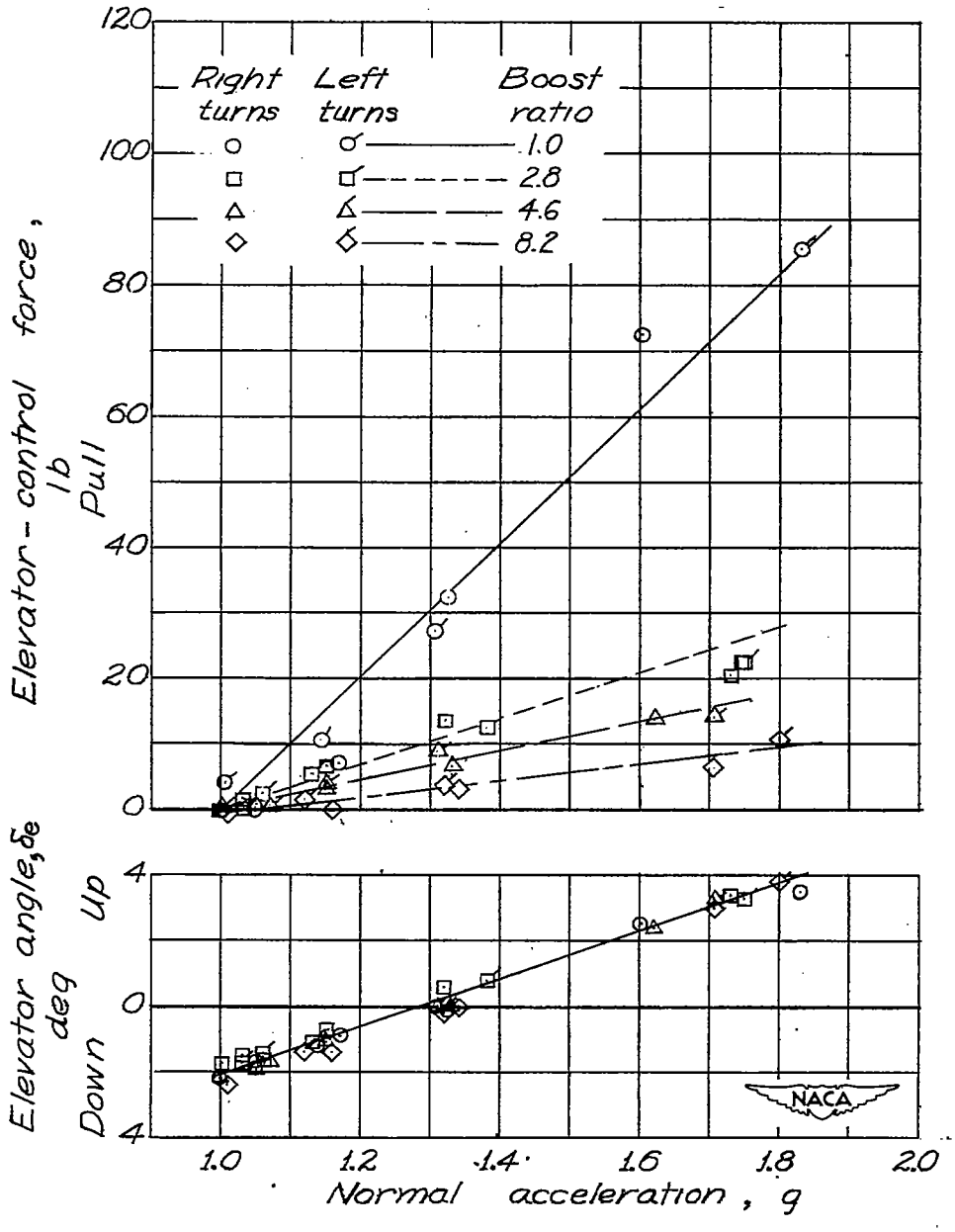

(b) Indicated airspeed; 200 miles per hour.

Figure 7.- Continued.

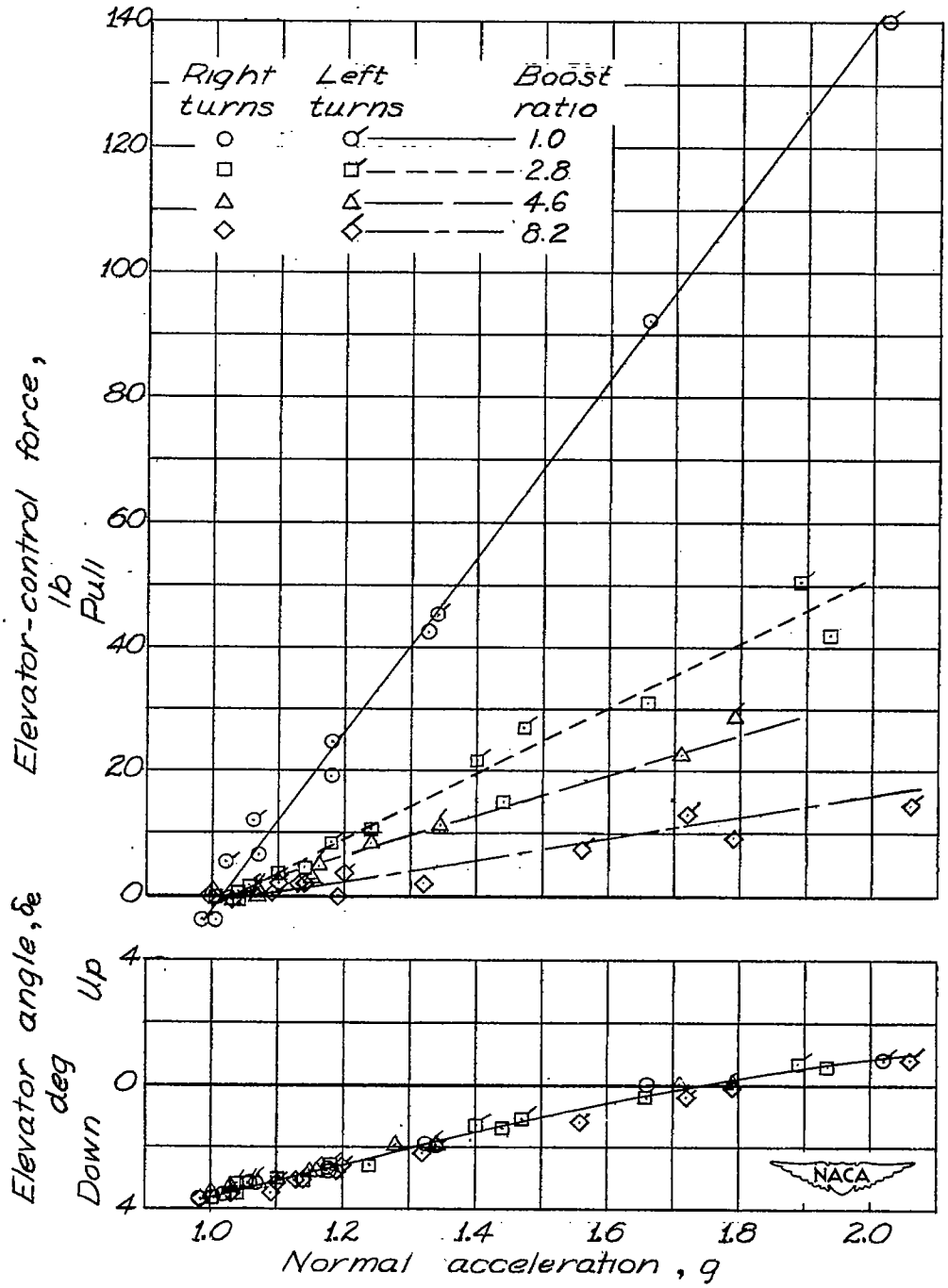

(c) Indicated airspeed; 250 miles per hour.

Figure 7.- Concluded.

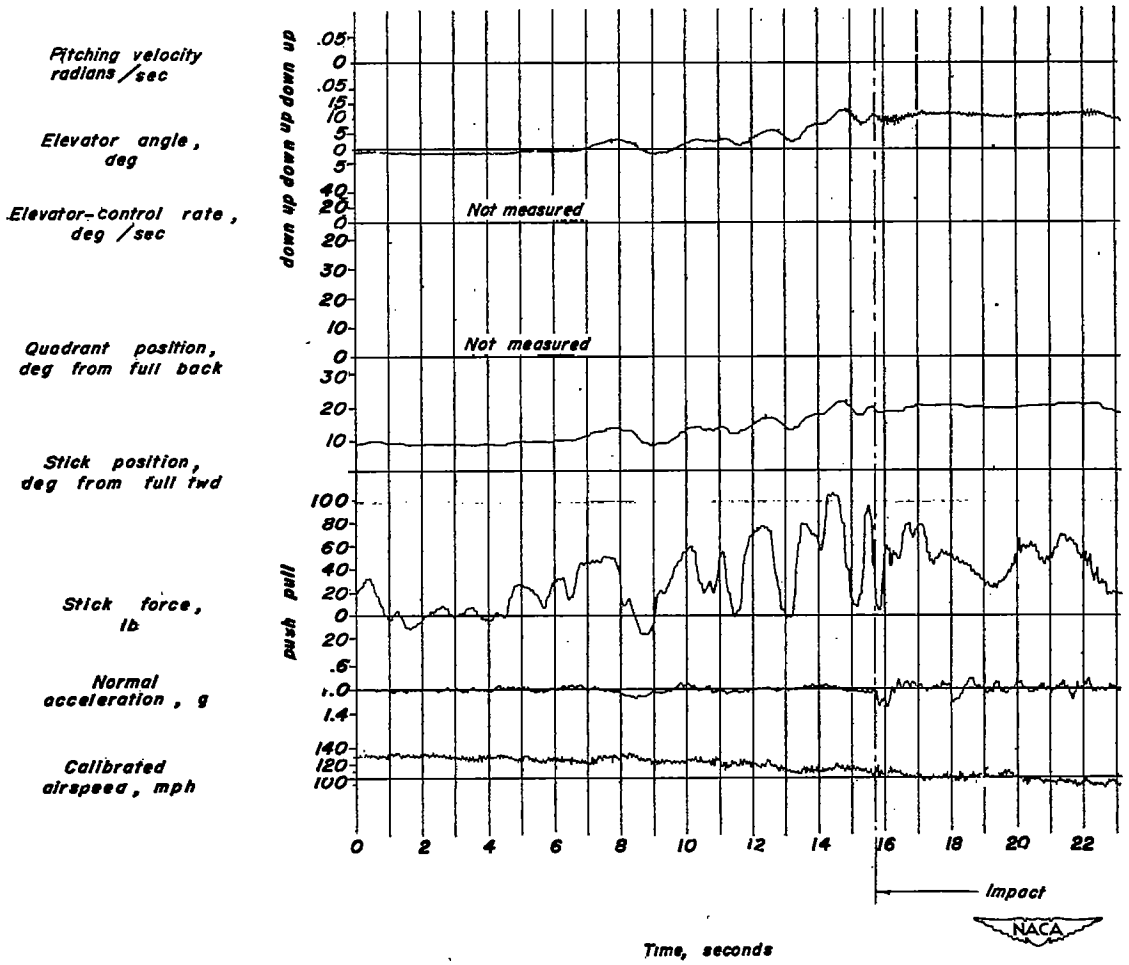

(a) Boost ratio, 1.0 (booster off).

Figure 8.- Time histories of landings of the B-29 airplane showing the effects of variation in control-force gradient through use of the booster.

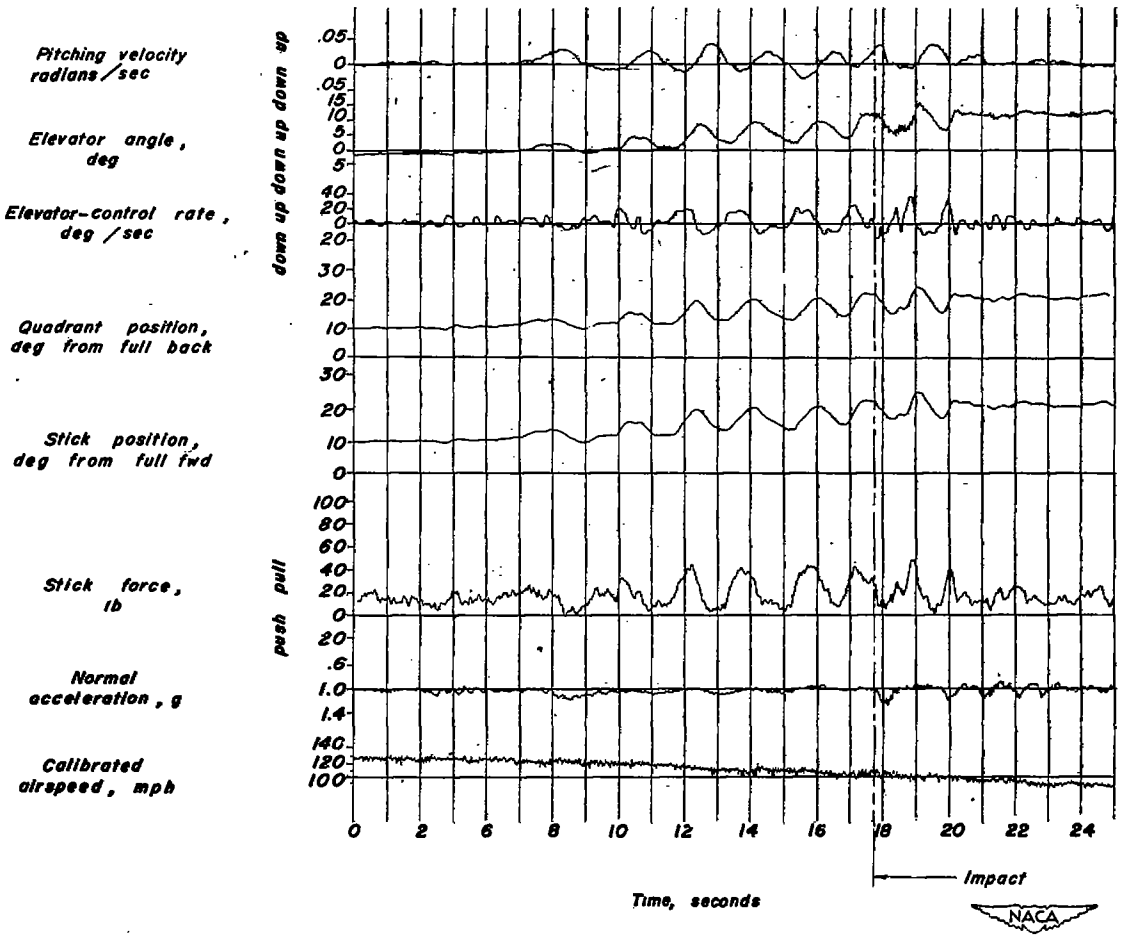

(b) Boost ratio, 2.8.

Figure 8.- Continued.

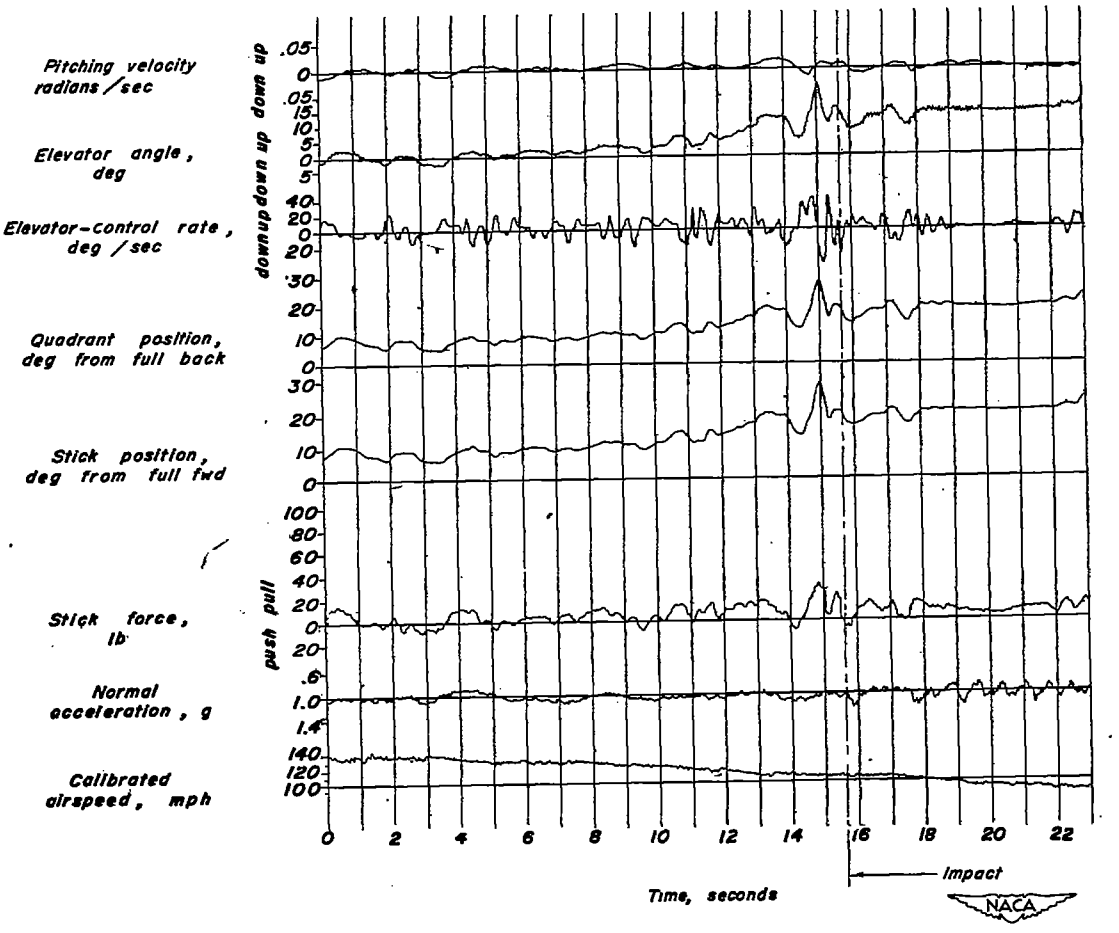

(c) Boost ratio, 4.6.

Figure 8.- Concluded.

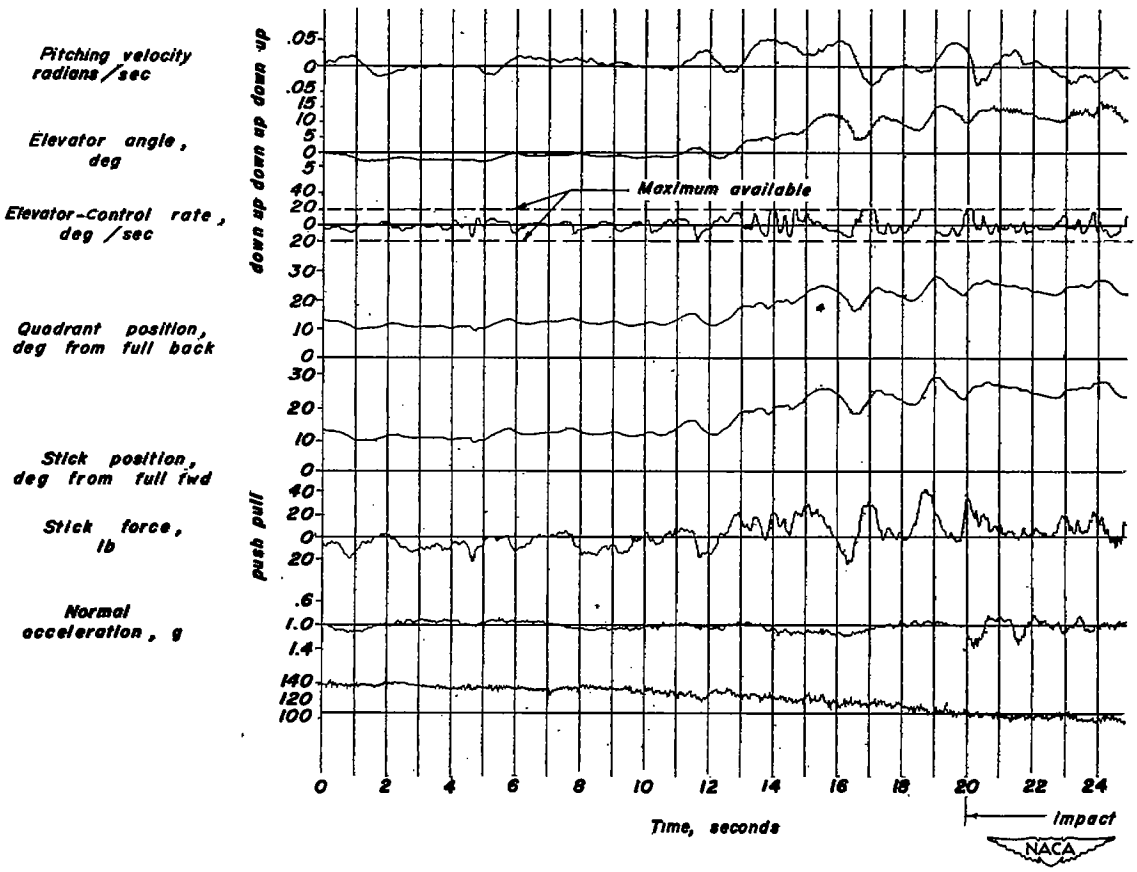

(a) Maximum available rate, 20° per second.

Figure 9.- Time histories of landings of the B-29 airplane showing the effects of variation in maximum available rate of control motion supplied by the booster. Boost ratio, 2.8.

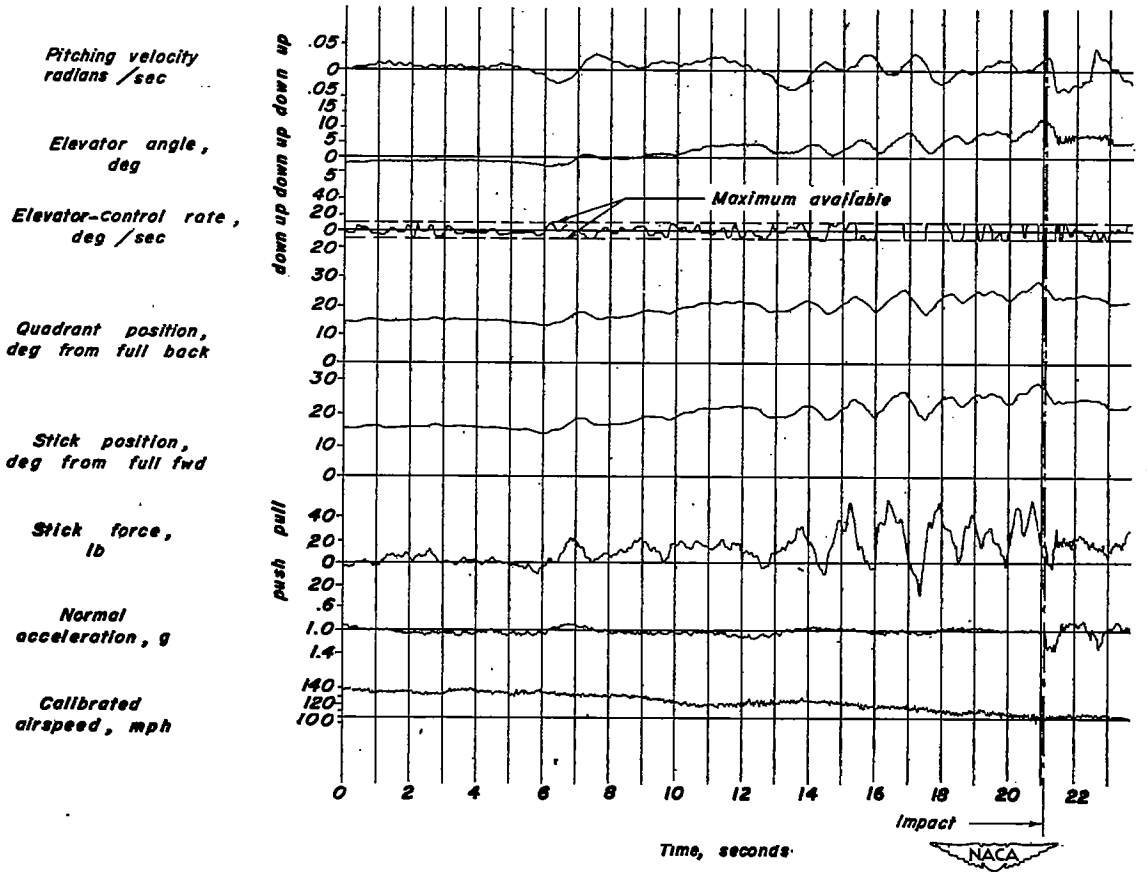

(b) Maximum available rate, 10° per second.

Figure 9.- Continued.

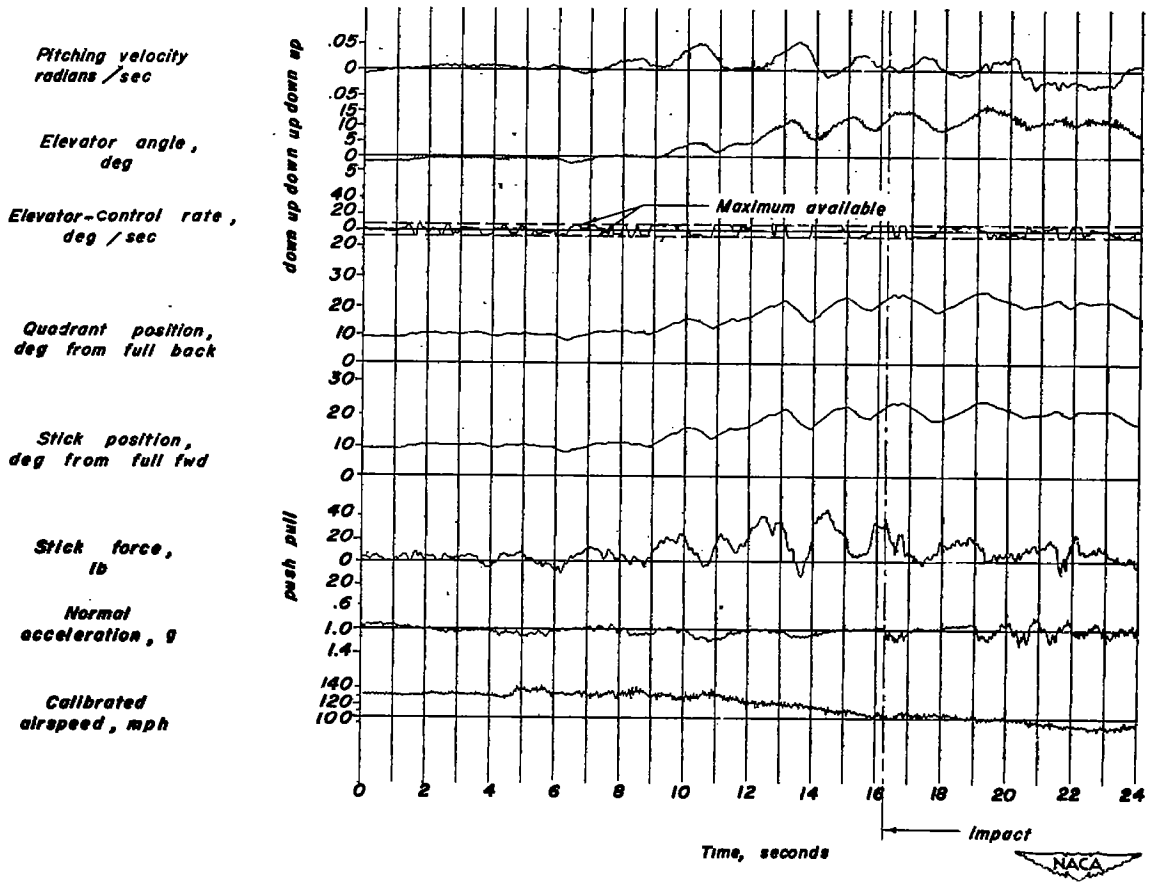

(c) Maximum available rate, 7° per second.

Figure 9.- Concluded.