Structures Res. Div.

DIVISION COPY

Copy 2

NACA TN 2267

NATIONAL ADVISORY COMMITTEE FOR AERONAUTICS

TECHNICAL NOTE 2267

INELASTIC COLUMN BEHAVIOR

By John E. Duberg and Thomas W. Wilder, III

Langley Aeronautical Laboratory
Langley Field, Va.

FOR REFERENCE

NOT TO BE TAKEN FROM THIS ROOM

LIBRARY COPY

MAY 6

LANGLEY RESEARCH CENTER
LIBRARY NASA
HAMPTON, VIRGINIA

Washington
January 1951

TABLE OF CONTENTS

	Page
SUMMARY	1
INTRODUCTION	1
THE CRITICAL LOAD	3
THE MAXIMUM LOAD	5
CONCLUSIONS	6
APPENDIX A - SYMBOLS	8
APPENDIX B - ANALYSIS OF SPRING-SUPPORTED COLUMN	10
Infinitesimal-Deflection Analysis	10
Left and right displacements increasing	12
Left and right displacements decreasing	13
Left displacement increasing, right displacement decreasing	13
Finite-Lateral-Deflection Analysis with Small Initial Deflection	16
Elastic range	16
Elastic-plastic range	17
Plastic range	18
Plastic range with elastic unloading	19
Numerical example	19
APPENDIX C - ANALYSIS OF IDEALIZED H-SECTION	20
Infinitesimal-Deflection Analysis	20
Derivation of the differential equations	20
Initial deflection with increasing load	22
Initial deflection with decreasing load	24
Initial load-deflection relations at tangent-modulus load and Euler load for arbitrary cross section	26
Finite-Deflection Analysis	27
Analysis of H-section column for constant tangent modulus	27
Analysis of H-section column with a nonlinear stress-strain curve	30
REFERENCES	34
FIGURES	35

NATIONAL ADVISORY COMMITTEE FOR AERONAUTICS

TECHNICAL NOTE 2267

INELASTIC COLUMN BEHAVIOR

By John E. Duberg and Thomas W. Wilder, III

SUMMARY

The significant findings of a theoretical study of column behavior in the plastic stress range are presented. When the behavior of a straight column is regarded as the limiting behavior of an imperfect column as the initial imperfection (lack of straightness) approaches zero, the departure from the straight configuration occurs at the tangent-modulus load. Without such a concept of the behavior of a straight column, one is led to the unrealistic conclusion that lateral deflection of the column can begin at any load between the tangent-modulus value and the Euler load, based on the original elastic modulus.

The behavior of a column with vanishing initial lack of straightness at loads beyond the tangent-modulus load depends upon the stress-strain curve for the material. A family of curves showing load against lateral deflection is presented for idealized H-section columns of various lengths and of various materials that have a systematic variation of their stress-strain curves. These curves show that, for columns in which the material stress-strain curves depart gradually from the initial elastic slope as is characteristic of stainless steels, the maximum column loads may be significantly above the tangent-modulus load. If the departure from the elastic curve is more abrupt, such as for the high-strength aluminum or magnesium alloys, the maximum load is only slightly above the tangent-modulus load.

INTRODUCTION

Until recently, the double-modulus theory had generally been accepted as the correct theory of column failure in the inelastic range of stress. This theory, originally developed by Considère and Engesser and later extended by Von Kármán (see reference 1 for a discussion of this development), predicts that the load at which bending starts and the maximum load that a pin-ended column can support are the same and can be obtained from the Euler equation

$$P_E = \frac{\pi^2 EI}{L^2}$$

by substitution of a reduced modulus for Young's modulus. (The symbols used in this paper are presented in appendix A.) The reduced modulus is obtained by assuming that, at the start of bending of an originally straight column, the direction of straining of the elements on the convex side of the column reverses. When such reversal of strain occurs in the plastic range, increments of stress are related to increments of strain by the original elastic modulus. The part of the cross section over which the strains reverse is determined by the condition that there shall be no change in load during the bending process.

In 1947, Shanley (reference 2) was able to show for a simplified column that, if the load is allowed to increase during bending, bending of the column can start at a lower load than the reduced-modulus load. The load for which he showed this to be true was the tangent-modulus load, which can be obtained from the Euler equation by substitution of the tangent modulus in place of Young's modulus. Shanley drew conclusions concerning the behavior of columns on the basis of the behavior of the simple model and certain experimental observations.

In order to clarify the behavior of columns in the plastic range, a theoretical study was made with the following threefold purpose:

(1) To establish the load at which a column starts to deflect, designated the critical load in this paper

(2) To study the mechanism of column action beyond the critical load

(3) To establish the relation between the maximum column load and the stress-strain curve for the material

In order to make this study, two models were chosen: One model, similar to Shanley's, was a spring-supported rigid column - that is, one that had a concentrated flexibility - and the other, an idealized H-section column that had its flexibility distributed along its length and consisted of two concentrated flanges separated by a web of negligible area but of infinite shear rigidity.

The significant results of this study were presented without proof at the Structures Session, Eighteenth Annual Meeting of the Institute of the Aeronautical Sciences held January 23-26, 1950, in New York, and were subsequently published by that organization as reference 3. The purpose of the present paper is to give the details of the analysis which were not included in reference 3. Since the original presentation, several other investigators have published the results of their researches on inelastic column action. (See references 4 to 6.) The results in these references are in substantial agreement with those obtained in this paper.

THE CRITICAL LOAD

In the elastic range of stress the critical load for a straight column - which must again be emphasized as having the restricted meaning in this paper as the load at which bending starts - is unique and is given by the well-known Euler formula. The situation is not so simple in the inelastic range of stress, however, and the source of the difficulty lies in the character of the stress-strain relations in the plastic range. In the inelastic range of stress, at least for uniaxial states of stress, increments in stress are related to increments in strain by the tangent modulus of the material, but decreases in stress are related to strain by the original elastic modulus.

In order to demonstrate the lack of uniqueness in defining a load at which bending starts in the inelastic range, the simple spring-supported column shown in figure 1 was analyzed. Details of the analysis are presented in appendix B. The inverted tee is rigid and free to rotate and translate vertically about the intersection of the cross of the tee. The column is supported at each end of the horizontal leg by identical sets of two elastic springs. One spring is fixed at the far end; the other spring has a ratchet attached to its far end which permits no additional strain in the spring when the displacement of the end of the horizontal member exceeds e_1. If the end of the horizontal member moves upward after exceeding e_1, the ratchet immediately catches. The combined force-displacement relation of each spring system is shown in figure 1. This relation may be regarded as a simple stress-strain curve that includes a plastic region and the phenomenon of strain reversal. If such a column is assumed perfectly straight and its load is free to change during bending, an infinity of loads can be found at which the top of this column can start to assume a deflected position. This range of loads is included between the tangent-modulus load for this column and the Euler load. Those loads between the tangent-modulus load and the reduced-modulus load require an increase in load during initial bending; whereas, those loads between the reduced-modulus load and the Euler load require a decrease in load during the bending process.

The actions of the spring systems at the start of bending can be described by locating the instantaneous center of rotation of the rigid column. At the tangent-modulus load, the center is at the end of the horizontal leg on the side that is not loading; therefore, no displacement of that spring system occurs. For loads between the tangent-modulus load and the Euler load, the center lies on the horizontal leg between the two ends. At the Euler load, the instantaneous center is at the opposite side and no displacement of that spring system occurs. It is evident, then, that reversal of the spring system on one side always occurs for these loads except at the tangent-modulus load when there is no change in the displacement of that side.

An analysis made for the idealized H-section (appendix C) reveals a similar but somewhat more complex behavior of a perfectly straight column; that is, the same range of loads exists at which a perfectly straight plastic column can start to assume a deflected shape. (See fig. 2.) Those loads between the tangent-modulus load and the reduced-modulus load are associated with an increase in load during initial deflection; whereas, those loads between the reduced-modulus load and the Euler load are associated with a decrease in load. The essential difference in the column actions for this range of loads is the pattern of strain reversal which occurs during bending. At the tangent-modulus load, none of the strains over the entire volume of the column reverse at the start of bending; however, the strain is just stationary at the center of the column on the convex side. At the reduced-modulus load, the reversal is complete over one side of the column as usually presented in the double-modulus theory and the strains are stationary along the surface that separates the reversed and unreversed regions. At the Euler load, all the strains reverse over the entire volume of the column except for the center of the column on the concave side, and there the strain is stationary. Because the distribution of stiffness over the length of the column is the same at these three loads, the instantaneous deflected shape is a half sine wave.

Since the deflected shape of the column at the tangent-modulus and Euler loads is known and since the instantaneous center for strain of the center cross section of the column is on the convex side at the tangent-modulus load and on the compression side at the Euler load, the initial slope of the curve of load against center deflection can be computed for the columns. The slopes obtained here are valid for columns of constant symmetrical cross section. At the tangent-modulus load,

$$\frac{dP}{dy_c} = \frac{b}{2\rho^2} P_T$$

and, at the Euler load,

$$\frac{dP}{dy_c} = -\frac{b}{2\rho^2} P_E$$

where b is the distance between the extreme fibers in bending and ρ is the radius of gyration of the cross section. At the reduced-modulus load, this slope is zero.

The analysis of a perfectly straight plastic column leads to a range of critical loads, but only the smallest, the tangent-modulus load, can be accepted as being significant for real columns. No real column is perfectly straight; therefore, it is reasonable to define the significant critical load as one based on the behavior of a slightly bent column

as the initial lack of straightness vanishes. In order to demonstrate the results of such a point of view for defining the critical load, a more complete analysis of the spring-supported column was made in which a small initial deflection d_o of the top of the column was included. In making such an analysis, it is necessary to keep track of the displacements of the individual spring systems to be certain that the correct force-displacement relations are being used. The possible combinations for the spring systems are shown in figure 3.

The results of the analysis of the column with various amounts of initial deflection are shown in figure 4. Also shown are the limits of the regions in which the various force-deflection relations exist. The most significant point to be observed is that, as the initial imperfection decreases, the tangent-modulus load is the limiting load at which there is a sustained increase in the bending deflection of the column. It should also be noted that the reversal of the spring deflection always occurs below the tangent-modulus load and occurs just at that load as the initial imperfection vanishes.

THE MAXIMUM LOAD

The load-deflection curves for the simple column, given in figure 4, are all approaching the reduced-modulus load at large deflection. This is a consequence of the linearity of the spring systems and is to be expected if one considers the deflected column with reversal as a new elastic column, the stiffness of which is measured by the reduced modulus. This behavior is not typical of the actions of real columns, because as the load on the column increases, the strains increase and there is a continual reduction of the tangent modulus. How rapidly the tangent modulus decreases depends on the shape of the stress-strain curve; therefore, the maximum strength of a column of a given geometry is expected to depend on the stress-strain curve of its material.

To study the effect of the shape of the stress-strain curve on the maximum strength of a column, an analysis was made of the behavior of the H-section column after it had become critical and started to bend at the tangent-modulus load. The analytical stress-strain curve for the material of this column was assumed to be of the form suggested by Ramberg and Osgood (reference 7). This form is summarized in figure 5. The stress σ_1 is usually close to the yield stress of the material. The most significant parameter for this study is the exponent n. Low values of n correspond to gradually curving stress-strain curves, and, as n increases, the curvature changes more rapidly at the knee. Values of n in the neighborhood of 10 are associated with aluminum alloys; whereas, values between 3 and 5 apply to stainless steels. Magnesium and the low-carbon steels have stress-strain curves which correspond to values of n of 30 or greater.

The study of strain history of the flanges of a column which starts to bend at the tangent-modulus load shows the same general strain history regardless of the shape of the stress-strain curve. At the start of bending, reversal of stress begins at the center of the convex side of the column. As the deflection increases, the region of reversal spreads rapidly over the convex side of the column and is complete over the whole convex flange at maximum load. After the deflection corresponding to the maximum load is exceeded, reversal of strain spreads into the concave side of the column.

A summary of the load-deflection results that were obtained for the H-section column when the stress-strain curve and the tangent-modulus load were systematically varied is given in figure 6. The loads are given in terms of a load P_1 that produces an average stress σ_1 in the straight column. Two results are significant: First, the smaller the value of n, the higher the maximum load in relation to the tangent-modulus load; second, the smaller the value of n, the greater the deflection at which the maximum load occurs. The results obtained for the maximum load are summarized in two forms: In figure 7, the ratio of the difference between the maximum load and the tangent-modulus load to the difference between the reduced-modulus load (had the column remained straight) and the tangent-modulus load is plotted as a function of the tangent-modulus load. The maximum load of columns, critical in the plastic stress range, exceeds the tangent-modulus load by a fairly constant percentage of the difference between P_{RM} and P_T. In figure 8 the ratio of P_{max} to P_T is plotted as a function of the tangent-modulus load. In the plastic range the percentage increases in maximum load over the critical load are roughly constant for a given value of n and are larger the smaller the value of n.

The dashed parts of the curves in figures 7 and 8 have no practical significance. Their shape is a consequence of the fact that the Ramberg-Osgood stress-strain curves have no proportional limit and are therefore nonlinear in what would normally be the elastic range. A more correct interpretation would be to consider the ordinates to be unity in the dashed regions.

CONCLUSIONS

The theoretical study of column behavior in the plastic stress range led to the following conclusions:

1. If the behavior of a perfectly straight column is regarded as the limiting behavior of a bent column as its initial imperfection vanishes, the tangent-modulus load is the critical load of the column - that is, the load at which bending starts.

2. The maximum load that an initially straight inelastic column can support is larger than the tangent-modulus load. The ratio of the maximum load to the tangent-modulus load will be larger for columns having stress-strain curves represented by lower values of the exponent n in the Ramberg-Osgood representation.

Langley Aeronautical Laboratory
National Advisory Committee for Aeronautics
Langley Field, Va., October 16, 1950

APPENDIX A

SYMBOLS

a_r	coefficients in sine series
A	cross-sectional area
b	column thickness
C_1,C_2,C_3,C_4	constants of integration
d_o	initial lateral deflection of spring-supported column model
d	lateral deflection of spring-supported column model
e	displacement or strain
e_1	displacement corresponding to force $P_1/2$ or strain corresponding to stress σ_1
E	Young's modulus
E_t	tangent modulus $(d\sigma/de)$
$E_T = \frac{d\sigma}{de}$	at stress corresponding to tangent-modulus load
F	force
I	moment of inertia
k	proportionality factor $(x = kL)$
k_1,k_2	spring constants
K	parameter used in Ramberg-Osgood representation
L	measure of length
m	positive integer
n	positive exponent in Ramberg-Osgood representation
P	variable load on column

P_1	load on straight column causing a strain e_1
r	positive integer used in sine series
u	vertical displacement of pivot point of spring-supported column
x	variable distance along length of column
x'	nondimensional distance along length of column $(x = x'L)$
x_1,x_2	variable dimensions of length measured from particular points
y	variable deflection
y'	nondimensional deflection $(y = y'b)$
y_1,y_2	deflections at x_1 and x_2
ρ	radius of gyration
σ	stress
σ_1	0.7E secant yield stress

Subscripts:

c	midheight of column
$()_{rev}$	particular value when reversal occurred
E	Euler
max	maximum
RM	reduced modulus
T	tangent modulus
L	left
R	right

APPENDIX B

ANALYSIS OF SPRING-SUPPORTED COLUMN

Two analyses were made of a simple mechanical model of a column. First, an infinitesimal-deflection analysis which showed that, if one assumed a column to be initially straight, an infinity of equilibrium paths could be found by which the column can start to deflect. Each path was associated with a definite load. The second analysis was a finite-deflection analysis of the same column and showed that, for real columns (which always contain some small initial imperfection), only the lowest of these loads, the tangent-modulus load, had any real significance.

If such a column is analyzed by the usual approach, the Euler load is

$$P_E = (k_1 + k_2)\frac{b^2}{L}$$

where the spring system stiffness $k_1 + k_2$ represents the original slope of the force-displacement diagram. Above the knee of the force-displacement diagram, the stiffness of each spring system for increasing displacements is k_1, and for this column the tangent-modulus load is

$$P_T = \frac{k_1 b^2}{L}$$

The double-modulus theory gives for this column a reduced stiffness $\frac{2k_1(k_1 + k_2)}{2k_1 + k_2}$ and therefore a reduced-modulus load

$$P_{RM} = \frac{2k_1(k_1 + k_2)}{2k_1 + k_2}\frac{b^2}{L} = \frac{2P_E P_T}{P_E + P_T}$$

In the development of the analysis it will be convenient to introduce these loads.

Infinitesimal-Deflection Analysis

Figure 1 shows the details of the model of the column. The vertical leg of length $L/2$ and two horizontal legs each of length $b/2$ are

considered rigid and rigidly joined. The column is loaded at the top of the vertical leg and is constrained at the intersection of the two legs so that this point is free to move vertically and rotate but cannot move horizontally. At each end of the horizontal member, there is a set of supporting springs. In each spring system, the spring with stiffness k_1 is elastic and its grounded end is rigidly supported; whereas, the spring with stiffness k_2 has its grounded end attached to a ratchet that slides for a constant force $\frac{P_1}{2}\frac{k_2}{k_1 + k_2}$ in the spring. On reduction of the force in this spring, the ratchet ceases to slide and unloading of the spring occurs with changes in force related to changes in displacement according to the stiffness k_2. The action of these two springs of stiffness k_1 and k_2 combine to form a force-displacement relationship for each system similar to an idealized stress-strain curve with a sharp knee at the force $P_1/2$ (see fig. 1).

Let us consider possible changes in the equilibrium position of the straight column that has been loaded with some force P which is greater than P_1. Static equilibrium of vertical forces and moments about the pivot point requires the changes in force in the springs to be related to the applied load and to any change in the applied load by the following equations:

$$\left.\begin{aligned} \Delta F_L + \Delta F_R &= \Delta P \\ \Delta F_L - \Delta F_R &= 2\,\frac{\Delta d}{b}(P + \Delta P) \end{aligned}\right\} \tag{B1}$$

The lateral deflection Δd is assumed to be directed to the left. The displacements of the sets of springs can be related by geometry to vertical displacement of the column at the pivot point Δu and the lateral deflection of the top of the column Δd. The displacement of the set of springs on the left is

$$\Delta e_L = \Delta u + \Delta d\,\frac{b}{L} \tag{B2a}$$

and on the right,

$$\Delta e_R = \Delta u - \Delta d\,\frac{b}{L} \tag{B2b}$$

In order to complete the analysis of the column, force-displacement relations must be introduced for the spring systems. The form of these relations depends on three possible displacement patterns:

(a) e_L and e_R increasing

(b) e_L and e_R decreasing

(c) e_L increasing and e_R decreasing

In the following sections, these three displacement patterns are discussed and also included in each analysis is the possibility of e_L and e_R not changing.

Left and right displacements increasing.- The first possible force-displacement combination corresponds to the left and right displacements increasing or remaining unchanged; that is,

$$\left.\begin{aligned} \Delta e_L &= \Delta u + \Delta d \frac{b}{L} \geqq 0 \\ \Delta e_R &= \Delta u - \Delta d \frac{b}{L} \geqq 0 \end{aligned}\right\} \tag{B3}$$

For a load P greater than P_1, these changes in displacement multiplied by k_1 give the changes in load as follows:

$$\left.\begin{aligned} \Delta F_L &= \left(\Delta u + \Delta d \frac{b}{L}\right)k_1 \\ \Delta F_R &= \left(\Delta u - \Delta d \frac{b}{L}\right)k_1 \end{aligned}\right\} \tag{B4}$$

Substitution of equations (B4) in equations (B1) gives the static equilibrium relations that must exist between the change in the column deflections and the load:

$$2k_1\Delta u = \Delta P \tag{B5a}$$

$$\Delta d\left[P_T - (P + \Delta P)\right] = 0 \tag{B5b}$$

where $P_T = \frac{k_1 b^2}{L}$ as noted previously.

The problem now is to find solutions to equations (B5) which do not violate the conditions on the displacements given by the inequalities (B3). A trivial solution is that Δd is zero and that Δu increases for a positive ΔP. Physically, this solution would mean that the column remains straight and continues to compress under increasing load. If, however, in the moment equilibrium equation (B5b), the

bracketed term is zero, it would seem that any Δd is possible and the column can bend. During the bending process, however, the load on the column $P + \Delta P$ must always be equal to P_T in order to satisfy moment equilibrium; ΔP must therefore be zero. If ΔP is zero, Δu is zero, and only zero Δd can satisfy the inequalities (B3).

Left and right displacements decreasing.- The second possible force-displacement combination corresponds to the left and right displacements decreasing or remaining unchanged; that is,

$$\left.\begin{aligned} \Delta e_L &= \Delta u + \Delta d \frac{b}{L} \leqq 0 \\ \Delta e_R &= \Delta u - \Delta d \frac{b}{L} \leqq 0 \end{aligned}\right\} \tag{B6}$$

Then

$$\left.\begin{aligned} \Delta F_L &= \left(\Delta u + \Delta d \frac{b}{L}\right)\left(k_1 + k_2\right) \\ \Delta F_R &= \left(\Delta u - \Delta d \frac{b}{L}\right)\left(k_1 + k_2\right) \end{aligned}\right\} \tag{B7}$$

Static equilibrium requires that

$$2(k_1 + k_2)\Delta u = \Delta P \tag{B8a}$$

$$\Delta d\left[P_E - (P + \Delta P)\right] = 0 \tag{B8b}$$

where $P_E = (k_1 + k_2)\frac{b^2}{L}$. If ΔP is negative, these conditions are satisfied for any P if Δd is zero. Physically, this solution would mean that the straight column can lengthen for a decrease in load. In the moment equilibrium equation (B8b), it would seem that any Δd is possible if the load on the column $P + \Delta P$ is P_E. If, during the bending process, the load $P + \Delta P$ must always be P_E, then ΔP must be zero. If ΔP is zero, there is no Δu, and only zero Δd can satisfy the inequalities (B6).

Left displacement increasing, right displacement decreasing.- The third force-displacement combination corresponds to the left displacement increasing and the right displacement decreasing or either displacement remaining unchanged; that is,

$$\left.\begin{aligned} \Delta e_L &= \Delta u + \Delta d\,\frac{b}{L} \geqq 0 \\ \Delta e_R &= \Delta u - \Delta d\,\frac{b}{L} \leqq 0 \end{aligned}\right\} \tag{B9}$$

Then

$$\left.\begin{aligned} \Delta F_L &= \left(\Delta u + \Delta d\,\frac{b}{L}\right)k_1 \\ \Delta F_R &= \left(\Delta u - \Delta d\,\frac{b}{L}\right)\left(k_1 + k_2\right) \end{aligned}\right\} \tag{B10}$$

Static equilibrium requires the following relations between the load, its change, and the changes in column displacements:

$$\left.\begin{aligned} (2k_1 + k_2)\Delta u - k_2\Delta d\,\frac{b}{L} &= \Delta P \\ -k_2\Delta u + (2k_1 + k_2)\Delta d\,\frac{b}{L} &= 2\,\frac{\Delta d}{b}(P + \Delta P) \end{aligned}\right\} \tag{B11}$$

When the previously mentioned relations for P_T, P_E, and P_{RM} are used, the displacements obtained from the static equilibrium equations (B11) are

$$\left.\begin{aligned} \frac{\Delta uL}{b^2} &= \frac{\dfrac{\Delta P}{P_T}}{2\left(1 - \dfrac{P}{P_{RM}}\right)}\left(\frac{P_T}{P_{RM}} - \frac{P}{P_E}\right) \\ \frac{\Delta d}{b} &= \frac{\dfrac{\Delta P}{P_T}}{2\left(1 - \dfrac{P}{P_{RM}}\right)}\left(1 - \frac{P_T}{P_{RM}}\right) \end{aligned}\right\} \tag{B12}$$

These relations between the change in load and the change in column deflections are valid only if they are consistent with the original assumptions for the force-displacement relations of the spring systems.

Substitution of these column deflections in the inequalities that define the direction of spring displacement yields the inequalities

$$\left.\begin{aligned} \frac{\frac{\Delta P}{P_T}}{1 - \frac{P}{P_{RM}}}\left(1 - \frac{P}{P_E}\right) &\geqq 0 \\ \frac{\frac{\Delta P}{P_T}}{1 - \frac{P}{P_{RM}}}\left(\frac{P_T}{P_E} - \frac{P}{P_E}\right) &\leqq 0 \end{aligned}\right\} \tag{B13}$$

Solutions consistent with lateral deflection exist among the equilibrium equations (B12) and the inequalities (B13) when the load on the column lies between P_T and P_E. When the load lies between P_T and P_{RM}, lateral deflection is possible for increases in load; whereas, when the load lies between P_{RM} and P_E, lateral deflection is possible only for decreasing load. If

$$P_T \leqq P \leqq P_{RM}$$

then

$$2 \geqq \frac{\frac{\Delta P}{P_T}}{\frac{\Delta d}{b}} \geqq 0$$

and if

$$P_{RM} \leqq P \leqq P_E$$

then

$$0 \geqq \frac{\frac{\Delta P}{P_T}}{\frac{\Delta d}{b}} \geqq -2\,\frac{P_E}{P_T}$$

Finite-Lateral-Deflection Analysis

with Small Initial Deflection

The previous analysis has indicated that an infinity of equilibrium paths can be found by which a perfectly straight column can undergo lateral deflection. A more realistic approach is to consider an actual column as one which admits a small but finite initial imperfection. It is of interest, therefore, to analyze the load-deflection history of the spring-supported column when such an imperfection exists.

Consider the same spring-supported column which has as an initial imperfection a small deflection d_o of the tip of the column. Static equilibrium requires that

$$\left.\begin{aligned} F_L + F_R &= P \\ F_L - F_R &= 2P\,\frac{d_o + d}{b} \end{aligned}\right\} \tag{B14}$$

Geometry requires the following relation between the spring displacements and the column deflection:

$$e_L - e_R = \frac{2db}{L} \tag{B15}$$

The force-displacement relations of the spring systems, as in the previous section, depend on the magnitude of the displacements and the direction in which they are progressing. During the initial loading, the spring systems are elastic. As the load increases, the spring system on the side with the more rapidly increasing displacement becomes "plastic" and the column is considered "elastic-plastic." If the initial deflection of the column is sufficiently small, the spring system on the side with the more slowly increasing displacements can also become plastic as the load increases. The region in which this occurs is considered "plastic." If, after both sides have become plastic, the trailing spring displacement reverses, it does so elastically and the column is considered "plastic with elastic unloading." A summary of these possible force-displacement combinations is given in figure 3. The column load-deflection relations in these four regions are found as follows:

Elastic range.- In the elastic range the force-displacement relations for the springs are

$$\left.\begin{aligned} F_L &= (k_1 + k_2)e_L \\ F_R &= (k_1 + k_2)e_R \end{aligned}\right\} \tag{B16}$$

Substitution of these relations in the static and geometric relations yields the following solution for the lateral deflection of the column:

$$\frac{d}{b} = \frac{\frac{P}{P_T}\frac{d_o}{b}}{\frac{P_E}{P_T} - \frac{P}{P_T}} \tag{B17}$$

where $P_E = \frac{b^2(k_1 + k_2)}{L}$ is the Euler load for this column. The limit of the elastic range is reached when the force in the more rapidly loading spring system equals $P_1/2$. The elastic region in the plot of column load against lateral deflection is bounded by the coordinate axes and the straight line given by

$$\frac{d}{b} - \frac{1}{2}\left(\frac{P_1}{P_E} - \frac{P}{P_T}\frac{P_T}{P_E}\right) = 0$$

Elastic-plastic range.- In the elastic-plastic range a new set of force-displacement relations exists for the springs. These relations are

$$\left.\begin{aligned} F_L &= k_1 e_L + k_2 e_1 \\ F_R &= (k_1 + k_2) e_R \end{aligned}\right\} \tag{B18}$$

The lateral deflection of the spring column in this range is defined by the equation

$$\frac{d}{b} = \frac{\frac{1}{2}\frac{P}{P_T}\left(\frac{P_T}{P_{RM}} - 1\right) - \frac{P}{P_{RM}}\frac{d_o}{b} + \frac{1}{4}\left(\frac{P_1}{P_T} - \frac{P_1}{P_E}\right)}{\frac{P}{P_{RM}} - 1} \tag{B19}$$

If

$$\frac{d_o}{b} > \frac{1}{2}\left(1 - 2\sqrt{\frac{P_1}{P_T}} + \frac{P_1}{P_T}\right)$$

lateral deflection grows in the elastic-plastic range and approaches infinity for values of the load approaching as a maximum value the reduced-modulus load P_{RM}. Before this maximum load is reached, the smaller spring displacement, which has remained elastic, always reverses its direction of displacing. For large initial deflections, this reversal occurs in the elastic range or at the instant the column enters

the elastic-plastic range. If the initial deflections are small enough, reversal occurs later. The loci of loads and deflections at which reversal occurs in the elastic-plastic region lie on the curve

$$\frac{d}{b} + \frac{1}{4}\left(\frac{P}{P_T}\right)^2\left(1 + \frac{P_T}{P_E}\right) - \frac{1}{2}\frac{P}{P_T} + \frac{1}{4}\frac{P_1}{P_T}\left(1 - \frac{P_T}{P_E}\right) = 0$$

If

$$\frac{d_o}{b} < \frac{1}{2}\left(1 - 2\sqrt{\frac{P_1}{P_T}} + \frac{P_1}{P_T}\right)$$

the spring displacement on the right, which has always been the smaller one, can also become plastic. The locus of points at which this change occurs is given by the straight line

$$\frac{d}{b} - \frac{1}{2}\left(\frac{P}{P_T} - \frac{P_1}{P_T}\right) = 0$$

Plastic range.- The plastic force-displacement relations for the springs are

$$\left.\begin{aligned} F_L &= k_1 e_L + k_2 e_1 \\ F_R &= k_1 e_R + k_2 e_1 \end{aligned}\right\} \tag{B20}$$

The lateral deflection in this range is given by the equation

$$\frac{d}{b} = \frac{\frac{P}{P_T}\frac{d_o}{b}}{1 - \frac{P}{P_T}} \tag{B21}$$

As the load and lateral deflection increase in the plastic range, the spring displacement on the right reverses and, consequently, changes the spring force-displacement relation. Reversal of the direction of the spring displacement in the plastic range takes place on the curve

$$\frac{d}{b} - \frac{1}{2}\frac{P}{P_T}\left(1 - \frac{P}{P_T}\right) = 0$$

Plastic range with elastic unloading.- After reversal has occurred in the plastic range, the force-displacement relations for the springs are

$$\left.\begin{aligned} F_L &= k_1 e_L + k_2 e_1 \\ F_R &= (k_1 + k_2)e_R + k_2\left[e_1 - (e_R)_{rev}\right] \end{aligned}\right\} \tag{B22}$$

The column lateral deflection is defined in this range by the equation

$$\frac{d}{b} = \frac{\frac{1}{2}\frac{P}{P_T}\left(\frac{P_T}{P_{RM}} - 1\right) - \frac{P}{P_{RM}}\frac{d_o}{b} - \frac{1}{2}\left(\frac{P_T}{P_{RM}} - 1\right)\left(1 - \sqrt{2\frac{d_o}{b}}\right)^2}{\frac{P}{P_{RM}} - 1} \tag{B23}$$

As the load increases, the lateral deflection increases and approaches infinity as the column load approaches P_{RM}, the reduced-modulus load.

Numerical example.- The lateral-deflection analysis of the spring-supported column was applied to a particular column. This column is defined by choosing a ratio of

$$\frac{P_E}{P_1} = \frac{9}{4}$$

and a ratio of

$$\frac{P_T}{P_1} = \frac{9}{8}$$

Such a column has a ratio of

$$\frac{P_{RM}}{P_T} = \frac{4}{3}$$

The results of the analysis are given in figure 4 for various values of initial deflection of the column.

APPENDIX C

ANALYSIS OF IDEALIZED H-SECTION

The analysis of the simple spring-supported column, given in appendix B, has served the purpose of showing the meaning of the tangent-modulus critical load in inelastic column behavior. The model is, however, a crude representation of an actual column and has only one possible deflected shape. The analysis fails to reveal another phenomenon associated with a real column, that is, the growth of the region of the column over which strain reversal takes place. A simple model that can exhibit the growth of reversal along its length is an idealized H-section column. Such a column consists of two flanges of equal area separated by a web of negligible thickness. No shear strain can occur in the web so that ordinary beam theory can be used to relate the curvature of the lateral deflection of the column to the strains in the flanges. Furthermore, the state of stress in each flange is assumed to be one-dimensional so that in the plastic range the stresses can be related to the strains by the ordinary stress-strain curve for the material. If strain reversal occurs in the plastic range, the unloading takes place elastically.

Infinitesimal-Deflection Analysis

An infinitesimal-deflection analysis of an originally straight H-section column reveals the same situation that exists when such an analysis is made for the spring column; that is, a range of loads exists for which a perfectly straight column can start to assume a deflected position of equilibrium.

Derivation of the differential equations.- At any section along the length of the column, static equilibrium requires that

$$\left.\begin{aligned} \Delta F_L + \Delta F_R &= \Delta P \\ \Delta F_L - \Delta F_R &= 2\,\frac{\Delta y}{b}(P + \Delta P) \end{aligned}\right\} \tag{C1}$$

Geometry requires that the curvature be related to the strains on either side of the column by the equation

$$\frac{d^2\Delta y}{dx^2} = -\frac{\Delta e_L - \Delta e_R}{b} \tag{C2}$$

In order to complete the analysis, the stress-strain relations for the flange must be defined. At every section along the length of the column there are three possible combinations of directions of straining: e_L and e_R increasing, e_L and e_R decreasing, and e_L increasing, e_R decreasing. Differential equations relating the column deflection to the load are derived as follows for these combinations:

If the strains e_L and e_R are increasing, the force-strain relations for the flange are

$$\left.\begin{aligned} \Delta F_L &= \Delta e_L \frac{AE_t}{2} \\ \Delta F_R &= \Delta e_R \frac{AE_t}{2} \end{aligned}\right\} \tag{C3}$$

Substituting these relations in the equation of geometry (C2) and eliminating ΔF_L and ΔF_R by the use of the static equilibrium equations (C1) yields the following differential equation in which the term of higher order has been neglected:

$$\frac{d^2\Delta y}{dx^2} + \frac{4P}{b^2AE_t}\Delta y = 0 \tag{C4}$$

If the strains e_L and e_R are decreasing, the force-strain relations for the flanges are

$$\left.\begin{aligned} \Delta F_L &= \Delta e_L \frac{AE}{2} \\ \Delta F_R &= \Delta e_R \frac{AE}{2} \end{aligned}\right\} \tag{C5}$$

Substituting these results in the equation of geometry (C2) and making use of the static equilibrium equations (C1) yields the following differential equation relating the column deflections to the load:

$$\frac{d^2\Delta y}{dx^2} + \frac{4P}{b^2AE}\Delta y = 0 \tag{C6}$$

If the strains e_L are increasing and the strains e_R are decreasing, the force-strain relations for the flanges are

$$\left.\begin{aligned} \Delta F_L &= \Delta e_L \frac{AE_t}{2} \\ \Delta F_R &= \Delta e_R \frac{AE}{2} \end{aligned}\right\} \tag{C7}$$

The differential equation relating the increment of column deflection to the load and its change is

$$\frac{d^2\Delta y}{dx^2} + \frac{2P}{b^2A}\left(\frac{1}{E_t} + \frac{1}{E}\right)\Delta y = -\frac{\Delta P}{Ab}\left(\frac{1}{E_t} - \frac{1}{E}\right) \tag{C8}$$

Initial deflection with increasing load.- If the H-section column deflects under end load, the sections along its length must be straining according to one of the three possibilities previously mentioned. If the bending takes place under increasing load, it is reasonable to assume that, in the regions near the ends of the column, both strains are increasing during bending. At the same time, in a region near the center of the column the strains on the left increase while those on the right decrease.

Therefore, differential equation (C4) may be assumed to apply at the ends of the column. The solution to this equation is

$$\Delta y_1 = C_1 \sin\sqrt{\frac{4P}{b^2AE_t}}\, x_1 \tag{C9}$$

where x_1 is measured from the end of the column and the cosine term has been dropped in order to satisfy the condition of zero deflection at the end of the column. At the center of the column, differential equation (C8) applies and its solution is

$$\Delta y_2 = C_2 \cos\sqrt{\frac{2P}{Ab^2}\left(\frac{1}{E} + \frac{1}{E_t}\right)}\, x_2 - \frac{\Delta P}{2P}\, b\, \frac{E - E_t}{E + E_t} \tag{C10}$$

where x_2 is measured from the center of the column and the sine term has been dropped because there is no slope at the center of the column. Three arbitrary quantities are to be determined: the constants C_1 and C_2 and the increase in load ΔP. These quantities are determined by the conditions that must exist at the junction between the region in which all strains increase and the region in which the strains on the convex or right side of the column reverse. If the region of increasing strains is of length kL, at the junction

$$x_1 = kL$$

$$x_2 = -\frac{1 - 2k}{2} L$$

the following conditions must be satisfied:

$$\left.\begin{aligned} \Delta y_1 - \Delta y_2 &= 0 \\ \frac{d\Delta y_1}{dx_1} - \frac{d\Delta y_2}{dx_2} &= 0 \\ \Delta e_R &= 0 \end{aligned}\right\} \qquad \text{(C11)}$$

Substitution of the deflected shapes Δy_1 and Δy_2 from equation (C9) and equation (C10), respectively, yields the following homogeneous system of equations in C_1, C_2, and ΔP:

$$\begin{vmatrix} \sin\sqrt{\frac{4Pk^2L^2}{b^2AE_t}} & -\cos\sqrt{\frac{P(1 - 2k)^2 L^2(E + E_t)}{2b^2AEE_t}} & -\frac{b}{2P}\frac{E_t - E}{E_t + E} \\ \cos\sqrt{\frac{4Pk^2L^2}{b^2AE_t}} & -\sqrt{\frac{E + E_t}{2E}}\sin\sqrt{\frac{P(1 - 2k)^2 L^2(E + E_t)}{2b^2AEE_t}} & 0 \\ P\sin\sqrt{\frac{4Pk^2L^2}{b^2AE_t}} & 0 & -\frac{b}{2} \end{vmatrix} \begin{vmatrix} C_1 \\ C_2 \\ \Delta P \end{vmatrix} = 0$$

(C12)

Solutions exist for values of the load and regions of reversal $(1 - 2k)L$ which satisfy the transcendental equation

$$\tan\sqrt{\frac{4Pk^2L^2}{b^2AE_t}}\tan\sqrt{\frac{P(1 - 2k)^2 L^2(E + E_t)}{2b^2AEE_t}} = \sqrt{\frac{E + E_t}{2E}} \qquad \text{(C13)}$$

The principal roots of this equation yield values of load lying between the tangent-modulus load and the reduced-modulus load, with corresponding regions of reversal on the convex side ranging from an infinitesimal

length at the center of the column to the entire side of the column. The shape of the deflected column is a half sine wave at these two limiting loads. The rate of change of the load in the column to the change in deflection at the center of the column is, at the tangent-modulus load,

$$\frac{\Delta P}{\Delta y_c} = \frac{2P_T}{b}$$

and, at the reduced-modulus load,

$$\frac{\Delta P}{\Delta y_c} = 0$$

Initial deflection with decreasing load.- By a process similar to the one used for initial deflection with increasing load, equilibrium paths can be found by which a straight plastic column can deflect under decreasing load. Assume that, for a region near the ends of the column, the strains on both sides are decreasing; then, differential equation (C6) applies in this region. The solution to this differential equation that satisfies the condition of zero deflection at the end of the column is

$$\Delta y_1 = C_3 \sin\sqrt{\frac{4P}{b^2AE}}\, x_1 \tag{C14}$$

In the region at the center of the column, the strains on the convex side are assumed to decrease and those on the concave side to increase; therefore, differential equation (C8) applies in this region. The solution for the deflected shape in this region is

$$\Delta y_2 = C_4 \cos\sqrt{\frac{2P\left(E + E_t\right)}{b^2AEE_t}}\, x_2 + \frac{\Delta P}{2P}\, b\, \frac{E_t - E}{E + E_t} \tag{C15}$$

A relation between the arbitrary quantities C_3, C_4, and ΔP is found from the three conditions that exist at the junction of the region in which all strains are decreasing and the region in which only the strains on the convex side are decreasing. At the junction, $x_1 = kL$ and $x_2 = -\frac{1 - 2k}{2} L$ where kL is now the length of the region of decreasing strains and the three conditions that must be satisfied are

$$\left.\begin{aligned} &\Delta y_1 - \Delta y_2 = 0 \\ &\frac{d\Delta y_1}{dx_1} - \frac{d\Delta y_2}{dx_2} = 0 \\ &\Delta e_L = 0 \end{aligned}\right\} \tag{C16}$$

These three conditions lead to the following homogeneous system of equations in C_3, C_4, and ΔP:

$$\begin{vmatrix} \sin\sqrt{\frac{4Pk^2L^2}{b^2AE}} & -\cos\sqrt{\frac{P(1 - 2k)^2 L^2(E + E_t)}{2b^2AEE_t}} & -\frac{b}{2P}\frac{E_t - E}{E + E_t} \\ \cos\sqrt{\frac{4Pk^2L^2}{b^2AE}} & -\sqrt{\frac{E + E_t}{2E_t}}\cos\sqrt{\frac{P(1 - 2k)^2 L^2(E + E_t)}{2b^2AEE_t}} & 0 \\ P\sin\sqrt{\frac{4Pk^2L^2}{b^2AE}} & 0 & \frac{b}{2} \end{vmatrix} \begin{vmatrix} C_3 \\ C_4 \\ \Delta P \end{vmatrix} = 0 \tag{C17}$$

Consistent solutions exist among the quantities C_3, C_4, and ΔP, which also satisfy the assumed directions of straining if the load and the regions of reversal satisfy the equation

$$\tan\sqrt{\frac{4Pk^2L^2}{b^2AE}}\tan\sqrt{\frac{P(1 - 2k)^2 L^2(E + E_t)}{2b^2AEE_t}} = \sqrt{\frac{E + E_t}{2E_t}} \tag{C18}$$

and if ΔP is negative.

Solutions of these equations exist for loads lying between the reduced-modulus load and the Euler load. At these two limiting loads, the deflected shapes are sinusoidal. At the reduced-modulus load, strain reversal occurs over the whole convex side of the column; whereas, at the Euler load, it is complete over both the convex and concave sides. At the reduced-modulus load

$$\frac{\Delta P}{\Delta y_c} = 0$$

and at the Euler load

$$\frac{\Delta P}{\Delta y_c} = -\frac{2P_e}{b}$$

Initial load-deflection relations at tangent-modulus load and Euler load for arbitrary cross section.- A general result which can be induced from the study of the spring-supported column and the H-section column is the initial slope of the load-deflection curve for any constant-section column at the tangent-modulus load, at the reduced-modulus load, and at the Euler load. At the tangent-modulus load, the strain at the center of the convex side of the column is stationary; therefore, the instantaneous center of rotation for strains in the cross section is at this point. The distribution of strain across the column is uniform with a maximum value at the concave side. If the strain on the concave side is $(\Delta e_L)_c$, the increase in load would be as follows for a symmetrical cross section:

$$\Delta P = \frac{\left(\Delta e_L\right)_c AE_T}{2} \tag{C19}$$

where A is the area of the cross section. The change in strain Δe_L is related to the curvature of the column by equation (C2) and is, at the center,

$$\frac{\left(\Delta e_L\right)_c}{b} = \left[-\frac{d^2}{dx^2}\left(\Delta y \sin \frac{\pi x}{L}\right)\right]_{x=\frac{L}{2}} = \Delta y_c \frac{\pi^2}{L^2} \tag{C20}$$

Elimination of $\left(\Delta e_L\right)_c$ between equations (C19) and (C20) yields

$$\Delta P = \frac{AE_T}{2} \Delta y_c \frac{\pi^2 b}{L^2}$$

or

$$\frac{\Delta P}{\Delta y_c} = \frac{b}{2\rho^2} P_T$$

At the reduced-modulus load, the slope is zero. At the Euler load, the instantaneous center for strains on the cross section is at the center of the column on the concave side; therefore, by a process

similar to that employed at the tangent-modulus load, this slope can be shown to be

$$\frac{\Delta P}{\Delta y_c} = -\frac{b}{2\rho^2} P_E$$

Finite-Deflection Analysis

An exact finite-deflection analysis in the plastic range is complicated by two factors. First, the deflections may become large enough that the more exact definition of curvature of the column is required. In the analysis which is developed here, the usual small-deflection definition for curvature is used and is justified by the results that show the most significant actions to take place for real columns at small displacements. Second, as lateral deflection proceeds, the strains on the convex side reverse their direction of straining and elastic unloading of the column elements takes place. This second phenomenon, referred to as the growth of the reversed region, was not so well understood and required some investigation. In order to investigate the effect of the growth of reversal, a finite-deflection analysis was made for an idealized H-section column made of material having a constant tangent modulus in the plastic range. Another analysis was made in which a more realistic stress-strain relation for the material was used to study the effect of the shape of the stress-strain relation on the strength of columns.

Analysis of H-section column for constant tangent modulus.- The previous analysis of the spring column has shown that a perfectly straight column may be assumed to start deflecting at the tangent-modulus load. The static relationship between the loads in flanges of the H-section and the applied load are given by the following equations:

$$\left.\begin{aligned} F_L + F_R &= P \\ F_L - F_R &= 2P\frac{y}{b} \end{aligned}\right\} \tag{C21}$$

The geometric relation between the strains in the flanges and the column deflection is

$$\frac{d^2y}{dx^2} = -\frac{e_L - e_R}{b} \tag{C22}$$

Furthermore, in some part of the column, the strains are assumed to continue to increase; then, for constant tangent modulus above P_T,

$$\left.\begin{aligned} F_L &= \frac{P_T}{2} + \frac{AE_T}{2}\left(e_L - e_T\right) \\ F_R &= \frac{P_T}{2} + \frac{AE_T}{2}\left(e_R - e_T\right) \end{aligned}\right\} \tag{C23}$$

where e_T is the uniform strain that exists everywhere in the column at the tangent-modulus load. The differential equation which relates the deflection to the applied load is obtained by substitution of the static and load strain relations into the geometric relation and is as follows:

$$\frac{d^2y}{dx^2} + \frac{4P}{b^2AE_T}\,y = 0 \tag{C24}$$

If at some section of the column the strains on the convex (right) side start to decrease, then

$$F_R = \left(F_R\right)_{rev} - \frac{AE}{2}\left[\left(e_R\right)_{rev} - e_R\right] \tag{C25}$$

where the subscript "rev" refers to the load and strain at which reversal of strain has taken place. The differential equation relating load to deflection along this part of the length can now be written as follows:

$$\frac{d^2y}{dx^2} + \frac{2P}{b^2A}\left(\frac{1}{E} + \frac{1}{E_t}\right)y = \frac{1}{b}\left[\frac{P}{A} - \frac{2\left(F_R\right)_{rev}}{A}\right]\left(\frac{1}{E} - \frac{1}{E_t}\right) \tag{C26}$$

These equations may be put in nondimensional form by introducing the following notations:

$$y' = \frac{y}{b} \qquad x' = \frac{x}{L} \qquad P_T = \frac{\pi^2E_Tb^2A}{4L^2}$$

$$P_{RM} = \frac{\pi^2b^2A}{4L^2}\,\frac{2EE_t}{E + E_t} \qquad P_E = \frac{\pi^2Eb^2A}{4L^2}$$

In the unreversed region

$$\frac{d^2y'}{d(x')^2} + \pi^2\left(\frac{P}{P_T}\right)y' = 0 \tag{C27}$$

and in the reversed region

$$\frac{d^2y'}{d(x')^2} + \pi^2 \frac{P}{P_{RM}} y' = \frac{\pi^2}{2}\left[\frac{P}{P_T} - \frac{2\left(F_R\right)_{rev}}{P_T}\right]\left(\frac{P_T}{P_{RM}} - 1\right) \tag{C28}$$

The difficulty involved in determining exactly the deflections arises from the fact that the growth of the reversed region is not known initially but must be determined as deflection proceeds. An approximate solution can be made which is based on the method of collocation and can be extended to any required degree of accuracy. The solution is developed by assuming that the deflections of the column can be expressed as the finite trigonometric series of odd sine terms

$$y' = \sum_{r=1}^{m} a_r \sin(2r - 1)\pi x' \tag{C29}$$

Such a series satisfies the boundary conditions and is symmetrical with respect to the center of the column. The coefficients of the series are obtained from the set of simultaneous algebraic equations obtained by substitution of the series into the differential equations (C27) and (C28) and satisfying them at m equidistant stations in the half-length of the column. Of the two differential equations, the one that applies at a given station depends on the direction of straining. It is therefore necessary to keep a check on the direction of straining at each station and to use the applicable equation when the direction of straining changes. The analysis can be started because the infinitesimal-deflection analysis has shown that, at the start of bending at the tangent-modulus load, only the strains at the center of the column have reversed. As the load increases, the reversed region spreads from the center of the column toward the ends.

The simplest approximate solution is obtained by the use of a single sine term which satisfies only the conditions at the center of the column. If

$$y' = y'_c \sin \pi x'$$

substituting this deflection shape in the differential equation (C28) and realizing that reversal occurs immediately at the center yields the following approximate solution for the deflection of the center of the column:

$$y'_c = \frac{\left(\frac{P}{P_T} - 1\right)\left(1 - \frac{P_T}{P_E}\right)}{4\left(1 - \frac{P}{P_{RM}}\right)} \tag{C30}$$

The deflection of the center line of the column as P exceeds P_T is given in figure 9. Also shown are the results obtained by again assuming $E_T = \frac{1}{2}E$ with two, three, and five sine terms for the deflected shape of the column and by satisfying the equilibrium and stress-strain relations at the corresponding number of equidistant points in the half-length of the column. All these solutions indicate that the maximum load on the column will approach the reduced-modulus load for large deflection because of the assumed linearity of the stress-strain curves. The solutions further indicate that relatively few terms in the series are required for an accurate solution of the load-deflection history of the column.

Analysis of H-section column with a nonlinear stress-strain curve.- The finite-deflection analyses of both the spring-supported column and the H-section column have indicated that, for a constant tangent modulus in the plastic range, the maximum load for a column approaches the reduced-modulus value at a large deflection. In order to make a study of the effect of a continually decreasing tangent modulus on the strength of an H-section column, a finite-deflection study was made by using a more realistic stress-strain curve. The Ramberg-Osgood representation of the stress-strain curve (reference 7) was chosen for the study because it fits closely a wide class of materials used in aircraft construction. The Ramberg-Osgood representation of the relation of stress and strain states that the strain is

$$e = \frac{\sigma}{E} + K\left(\frac{\sigma}{E}\right)^n \tag{C31}$$

where E, K, and n are chosen so that a suitable fit is obtained to the stress-strain curve. A recommended procedure for determining the three parameters is suggested by Ramberg and Osgood. The quantity E should be the initial elastic modulus, and if

$$K = \frac{3}{7}\left(\frac{\sigma_1}{E}\right)^{1-n}$$

then σ_1 is the stress at the intercept of the stress-strain curve and a line through the origin with a slope 0.7 of the elastic modulus. The stress σ_1 is approximately the yield stress defined by the 0.2-percent

offset. The quantity n is a measure of the sharpness of curvature of the stress-strain curve at the yield stress. Smoothly varying stress-strain curves that are typical of stainless steel have values of n between 3 and 5. The values of n for the aluminum alloys are about 10. Very large values of n are associated with the magnesium alloys and the mild steels.

The static and geometric relations are the same as those used in the analysis of the H-section with constant tangent modulus. Because of the form of the Ramberg-Osgood stress-strain relationship, strain in terms of force is more convenient. If the strains are increasing, then

$$\left.\begin{aligned} e_L &= \frac{2F_L}{AE} + \frac{3}{7}\left(\frac{P_1}{AE}\right)^{1-n}\left(\frac{2F_L}{AE}\right)^n \\ e_R &= \frac{2F_R}{AE} + \frac{3}{7}\left(\frac{P_1}{AE}\right)^{1-n}\left(\frac{2F_R}{AE}\right)^n \end{aligned}\right\} \tag{C32}$$

where P_1 is the load on a straight column for which the average stress is σ_1, the yield stress. Substituting these strain-force relations into the geometric and static relations and making use of the following relations

$$y' = \frac{y}{b} \qquad x' = \frac{x}{L} \qquad P_T = \frac{\pi^2 E_T b^2 A}{4L^2} \qquad \frac{E}{E_T} = 1 + \frac{3}{7}\,n\left(\frac{P_T}{P_1}\right)^{n-1}$$

yields the following differential equation:

$$\frac{d^2y'}{d(x')^2} + \frac{\pi^2}{\frac{P_T}{P_1} + \frac{3n}{7}\left(\frac{P_T}{P_1}\right)^n}\left\{\frac{P}{P_1}\,y' + \frac{3}{28}\left(\frac{P}{P_1}\right)^n\left[(1 + 2y')^n - (1 - 2y')^n\right]\right\} \tag{C33}$$

The strain-force relations when reversal has taken place are

$$\left.\begin{aligned} e_L &= \frac{2F_L}{AE} + \frac{3}{7}\,\frac{P_1}{AE}\left(\frac{2F_L}{P_1}\right)^n \\ e_R &= \frac{2F_R}{AE} + \frac{3}{7}\,\frac{P_1}{AE}\left[\frac{2\left(F_R\right)_{rev}}{P_1}\right]^n \end{aligned}\right\} \tag{C34}$$

These relations give the following differential equation for the reversed region:

$$\frac{d^2y'}{d(x')^2} + \frac{\pi^2}{\frac{P_T}{P_1} + \frac{3n}{7}\left(\frac{P_T}{P_1}\right)^n}\left(\frac{P}{P_1}y' + \frac{3}{28}\left\{\left(\frac{P}{P_1}\right)^n(1 + 2y')^n - \left[\frac{2\left(F_R\right)_{rev}}{P_1}\right]^n\right\}\right) = 0 \tag{C35}$$

After the maximum load in the column is reached, there are sections of the column for which the strains on both sides of the column are decreasing. The strain-force relations in this region are

$$\left.\begin{aligned} e_L &= \frac{2F_L}{AE} + \frac{3}{7}\frac{P_1}{AE}\left[\frac{2\left(F_L\right)_{rev}}{P_1}\right]^n \\ e_R &= \frac{2F_R}{AE} + \frac{3}{7}\frac{P_1}{AE}\left[\frac{2\left(F_R\right)_{rev}}{P_1}\right]^n \end{aligned}\right\} \tag{C36}$$

The differential equation which is applicable in this region is

$$\frac{d^2y'}{d(x')^2} + \frac{\pi^2}{\frac{P_T}{P_1} + \frac{3n}{7}\left(\frac{P_T}{P_1}\right)^n}\left(\frac{P}{P_1}y' + \frac{3}{28}\left\{\left[\frac{2\left(F_L\right)_{rev}}{P_1}\right]^n - \left[\frac{2\left(F_R\right)_{rev}}{P_1}\right]^n\right\}\right) = 0 \tag{C37}$$

The solution of the system of differential equations was carried out by the same procedure used in the analysis of the H-section with a constant tangent modulus. A solution was assumed in the form of a finite series of odd sine terms. Substitution of the series into the appropriate differential equations and satisfying them exactly at an equidistant number of stations along the length of the column yields a system of algebraic equations. The system of equations is nonlinear because the moduli are a function of the displacements.

The simplest approximate solution is obtained by substituting

$$y' = y'_c \sin \pi x'$$

in the differential equation (C35) and satisfying the equation at the center of the column. The nondimensional relation between the center-line

displacement and the applied load is then obtained from the equation

$$(1 + 2y'_c)^n\left(\frac{P}{P_1}\right)^n + \frac{28}{3}\,y'_c\,\frac{P}{P_1} = \frac{28}{3}\,y'_c\left[\frac{P_T}{P_1} + \frac{3n}{7}\left(\frac{P_T}{P_1}\right)^n\right] + \left(\frac{P_T}{P_1}\right)^n \tag{C38}$$

in which use is made of the fact that reversal occurs at the center of the right side of the column at the tangent-modulus load. Solutions of equation (C38) for various values of n and for various ratios of the tangent-modulus load to the yield-stress load P_1 are given in figure 6. The same nondimensional results are obtained in the analysis of the spring-supported column.

In order to study the error due to fixing the shape as a single sine curve, solutions were made with three sine curves. These solutions were made for $n = 2$ and 10 and for a ratio of tangent-modulus load to yield-stress load of unity. Figure 10 shows a comparison of the results of these calculations with those obtained for a single sine curve. The comparison indicates a slight reduction in the maximum load and an increase in the deflection at which maximum load occurs.

The amount of the difference between the tangent-modulus load and the reduced-modulus load which the H-section column could actually support were obtained from the analysis summarized in figure 6 and are given in nondimensional form in figure 7 for various values of n. As increases, less of the difference is developed for columns critical in the plastic range.

The relation of the maximum load to the tangent-modulus load is summarized in figure 8 for various values of n and for columns which are critical at various stress levels.

In figures 7 and 8, the dashed parts of the curve were not calculated and are estimates of what would be obtained from the analysis using the Ramberg-Osgood form of the stress-strain relation. These dashed parts of the curve are trivial and misleading and are caused by the fact that the analytical form of the stress-strain curve has no truly linear elastic region. In the elastic region, no difference should exist between the maximum load, the tangent-modulus load, and the reduced-modulus load (large deflection effects excluded).

REFERENCES

1. Osgood, William R.: The Double-Modulus Theory of Column Action. Civ. Eng., vol. 5, no. 3, March 1935, pp. 173-175.

2. Shanley, F. R.: Inelastic Column Theory. Jour. Aero. Sci., vol. 14, no. 5, May 1947, pp. 261-267.

3. Duberg, John E., and Wilder, Thomas W., III: Column Behavior in the Plastic Stress Range. Jour. Aero. Sci., vol. 17, no. 6, June 1950, pp. 323-327.

4. Lin, Tung-Hua: Inelastic Column Buckling. Jour. Aero. Sci., vol. 17, no. 3, March 1950, pp. 159-172.

5. Pearson, C. E.: Bifurcation Criterion and Plastic Buckling of Plates and Columns. Jour. Aero. Sci., vol. 17, no. 7, July 1950, pp. 417-424, 455.

6. Cicala, P.: Column Buckling in the Elastoplastic Range. Jour. Aero. Sci., vol. 17, no. 8, August 1950, pp. 508-512.

7. Ramberg, Walter, and Osgood, William R.: Description of Stress-Strain Curves by Three Parameters. NACA TN 902, 1943.

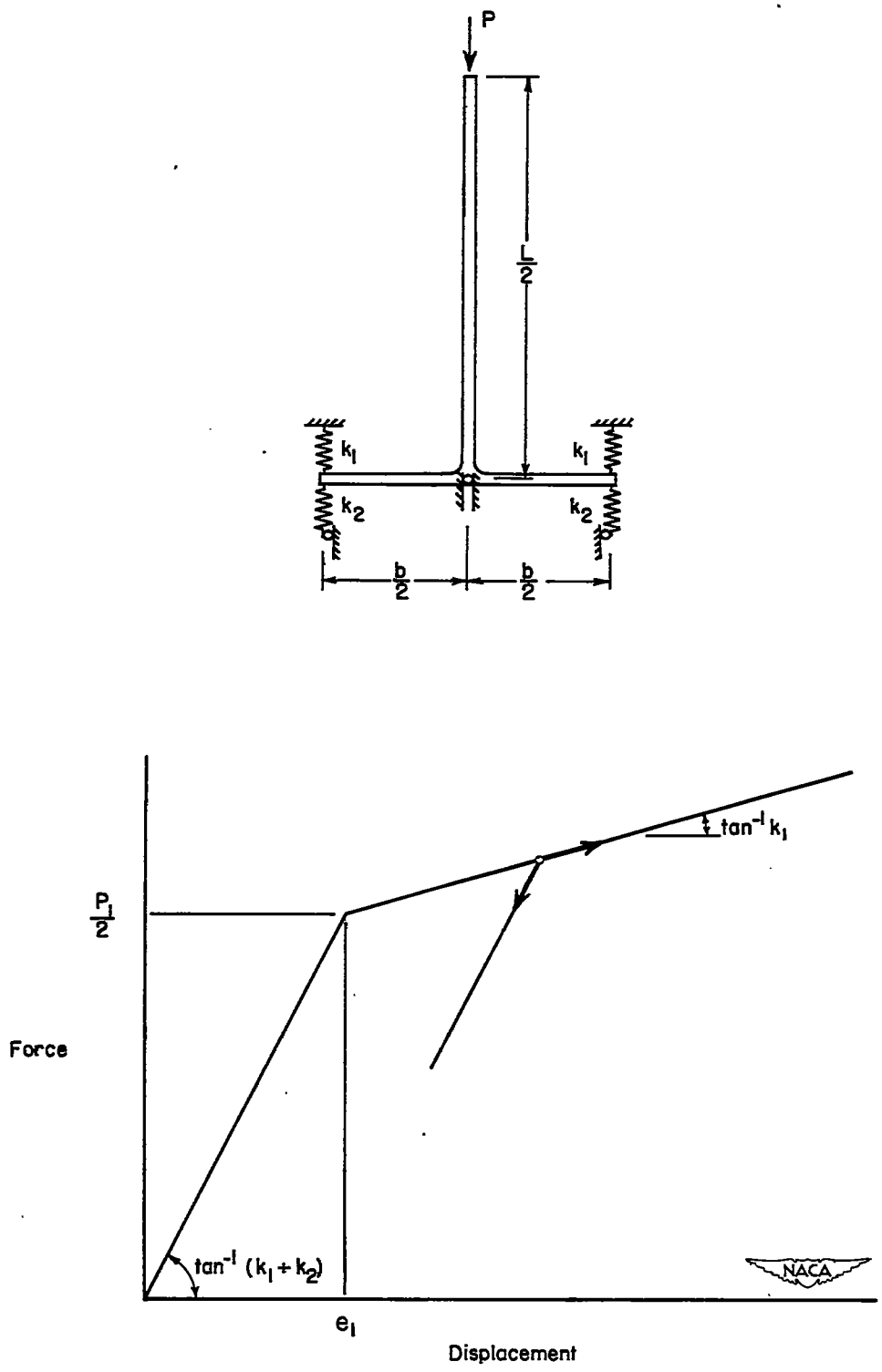

Figure 1.- Spring-supported column model and force-displacement diagram for each spring system.

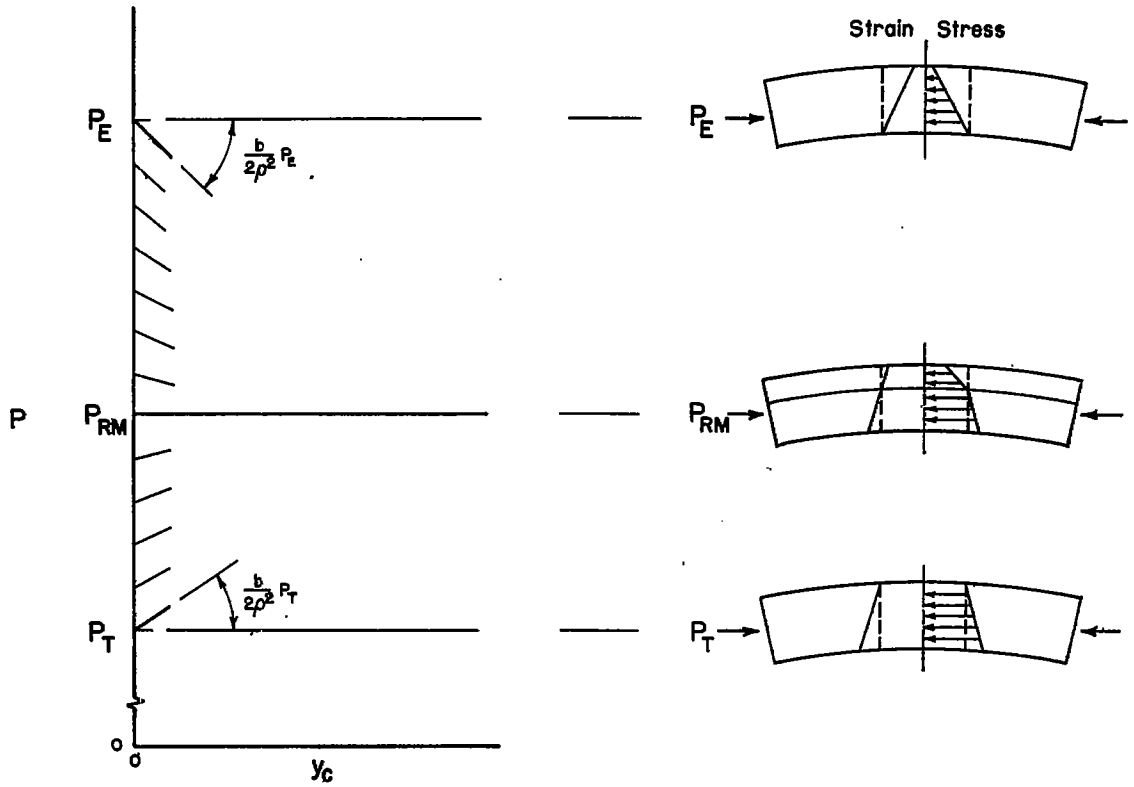

(a) Initial slopes of load-deflection curves.

(b) Initial stress and strain changes at center cross section.

Figure 2.- Column behavior at critical loads.

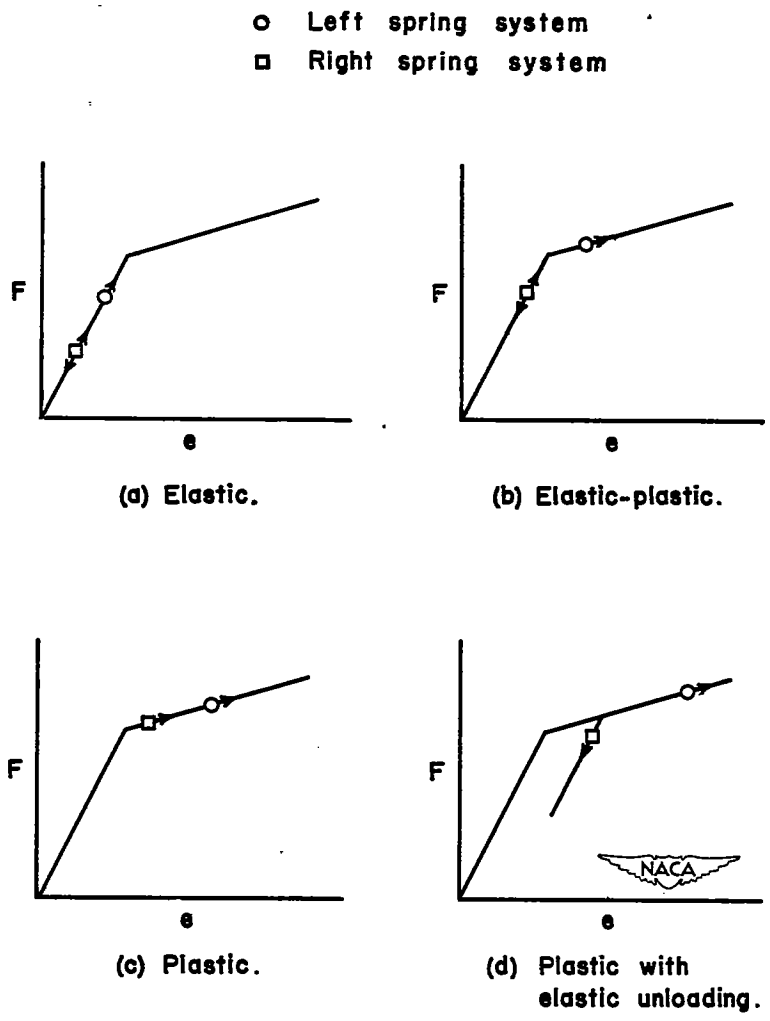

Figure 3.- Four force-displacement combinations for the spring systems.

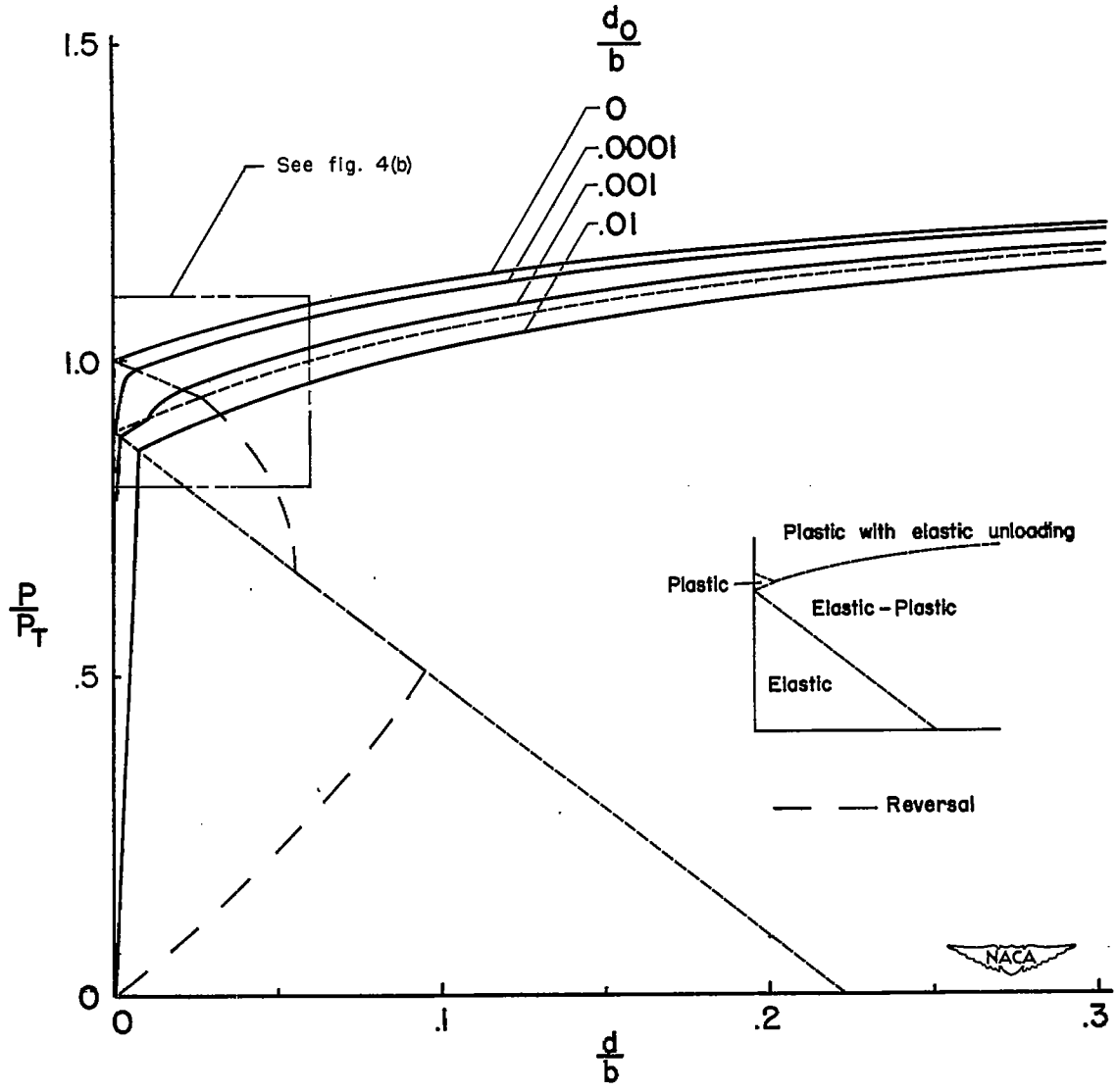

Figure 4(a).- Load-deflection curves for spring-supported column model with initial deflection.

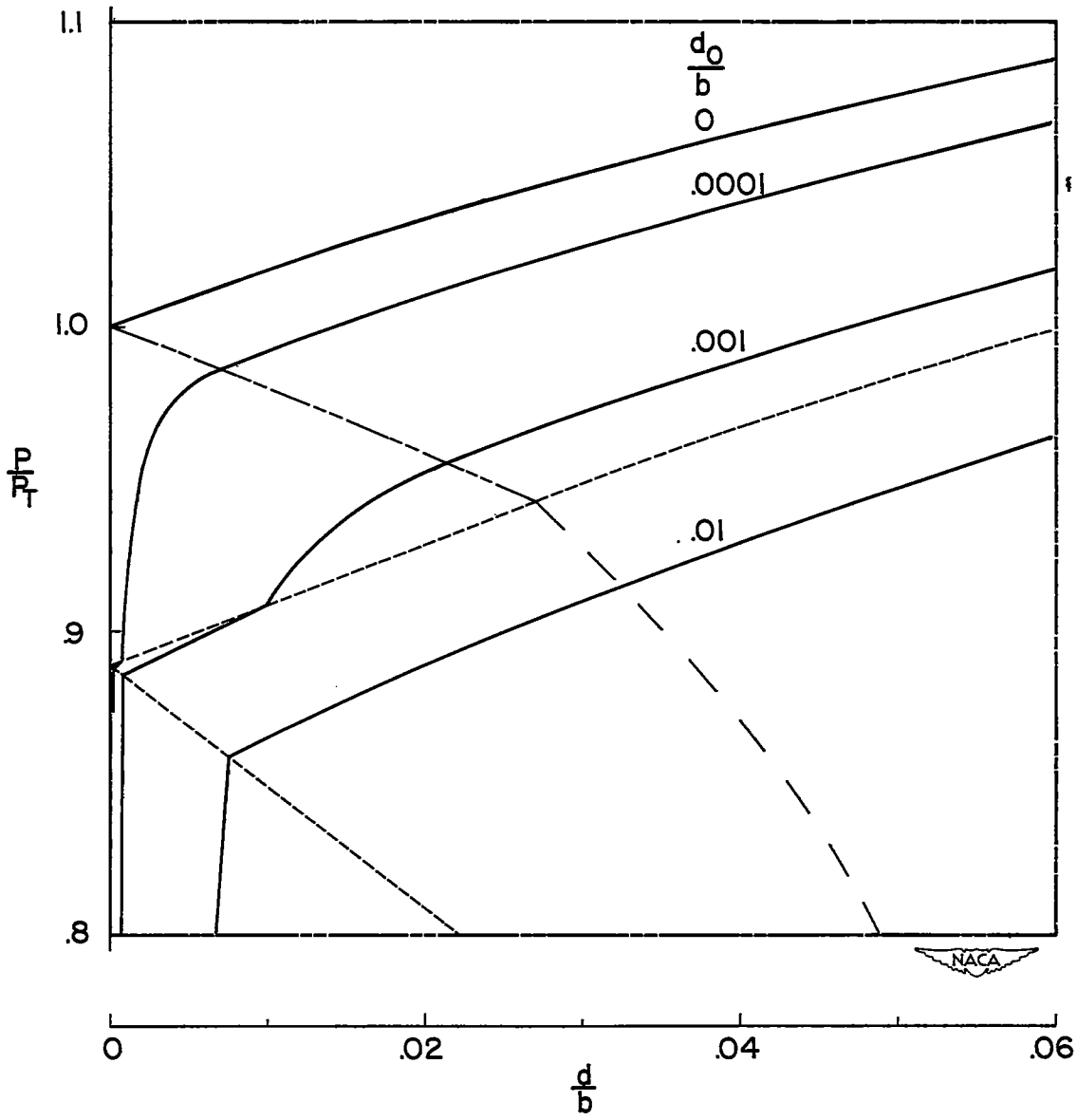

Figure 4(b).- Detail of figure 4(a).

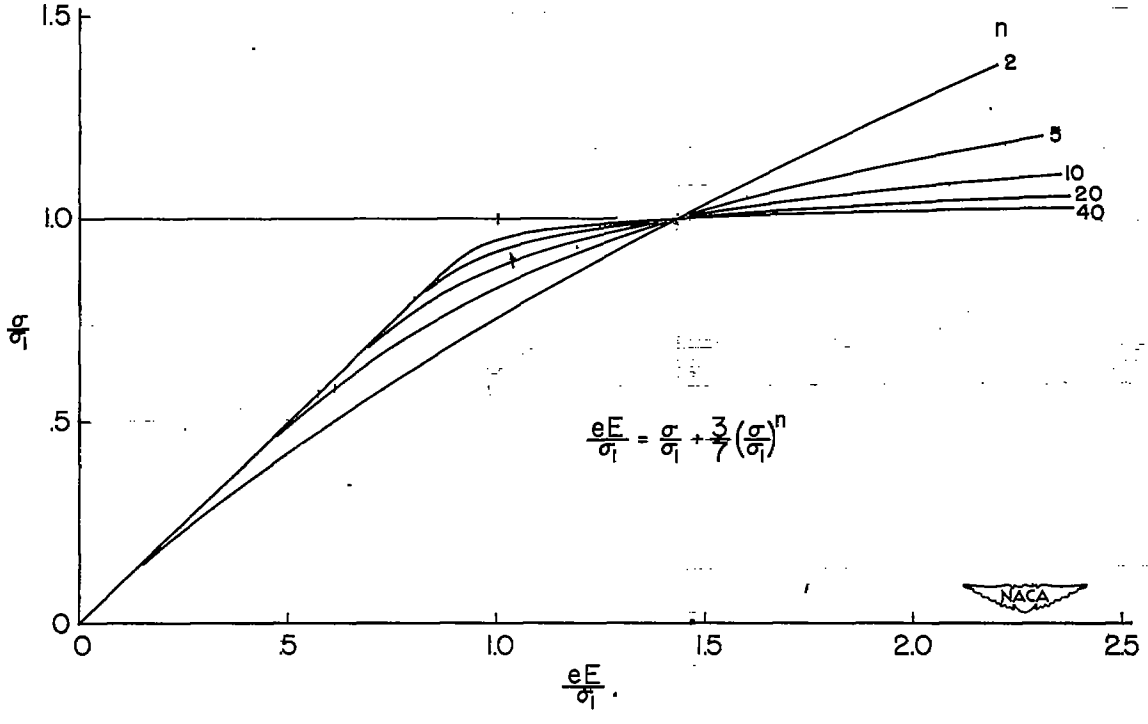

Figure 5.- Ramberg-Osgood nondimensional stress-strain curves.

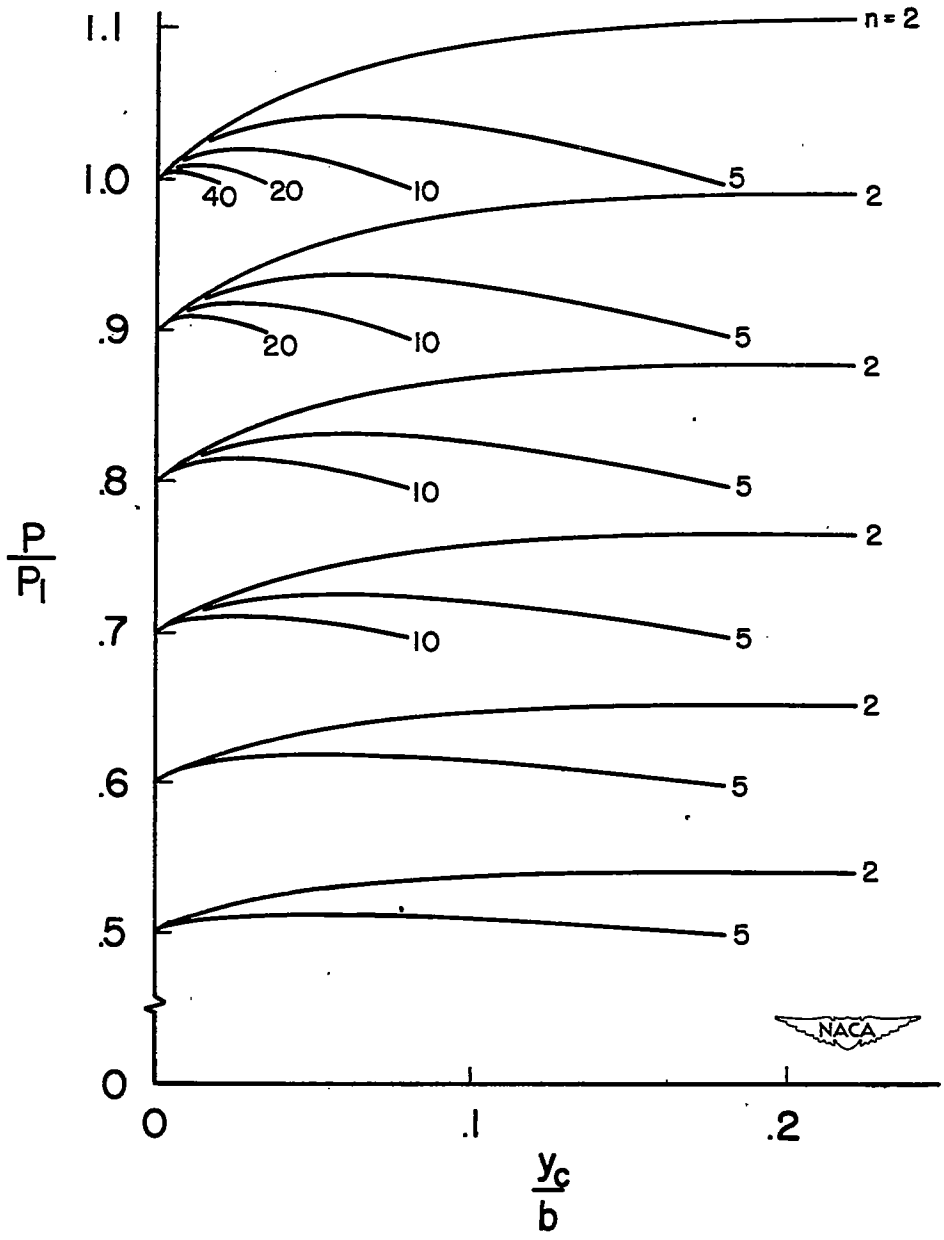

Figure 6.- Load-deflection curves for idealized H-section columns having tangent-modulus loads at various stress levels.

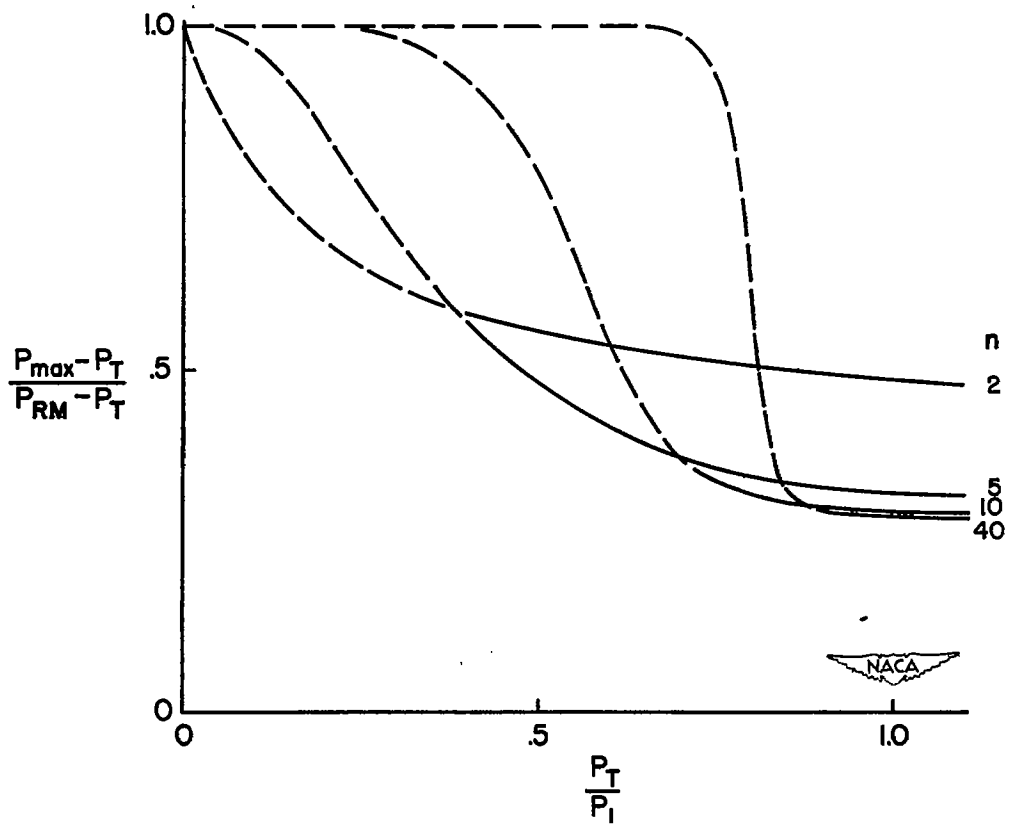

Figure 7.- Relation of maximum load to reduced-modulus load and tangent-modulus load.

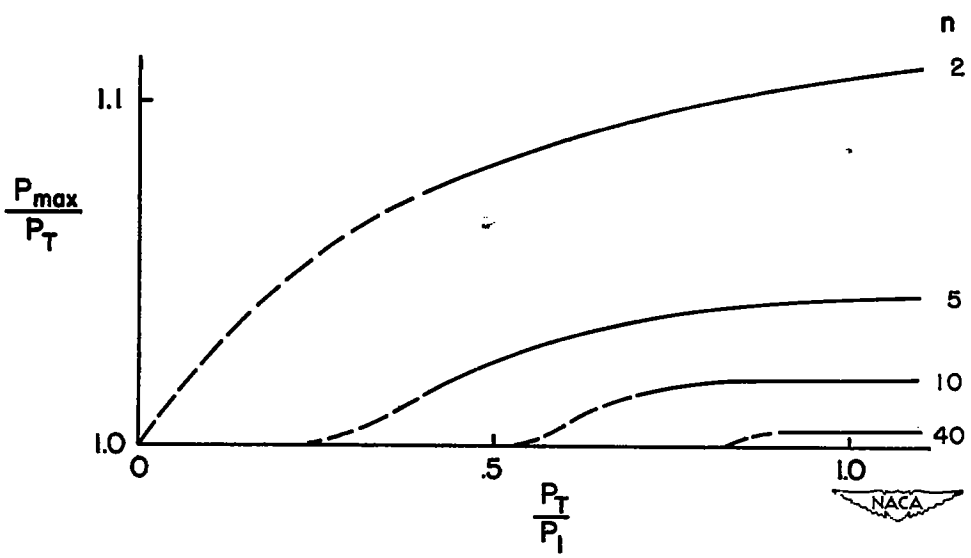

Figure 8.- Relation of maximum load to tangent-modulus load.

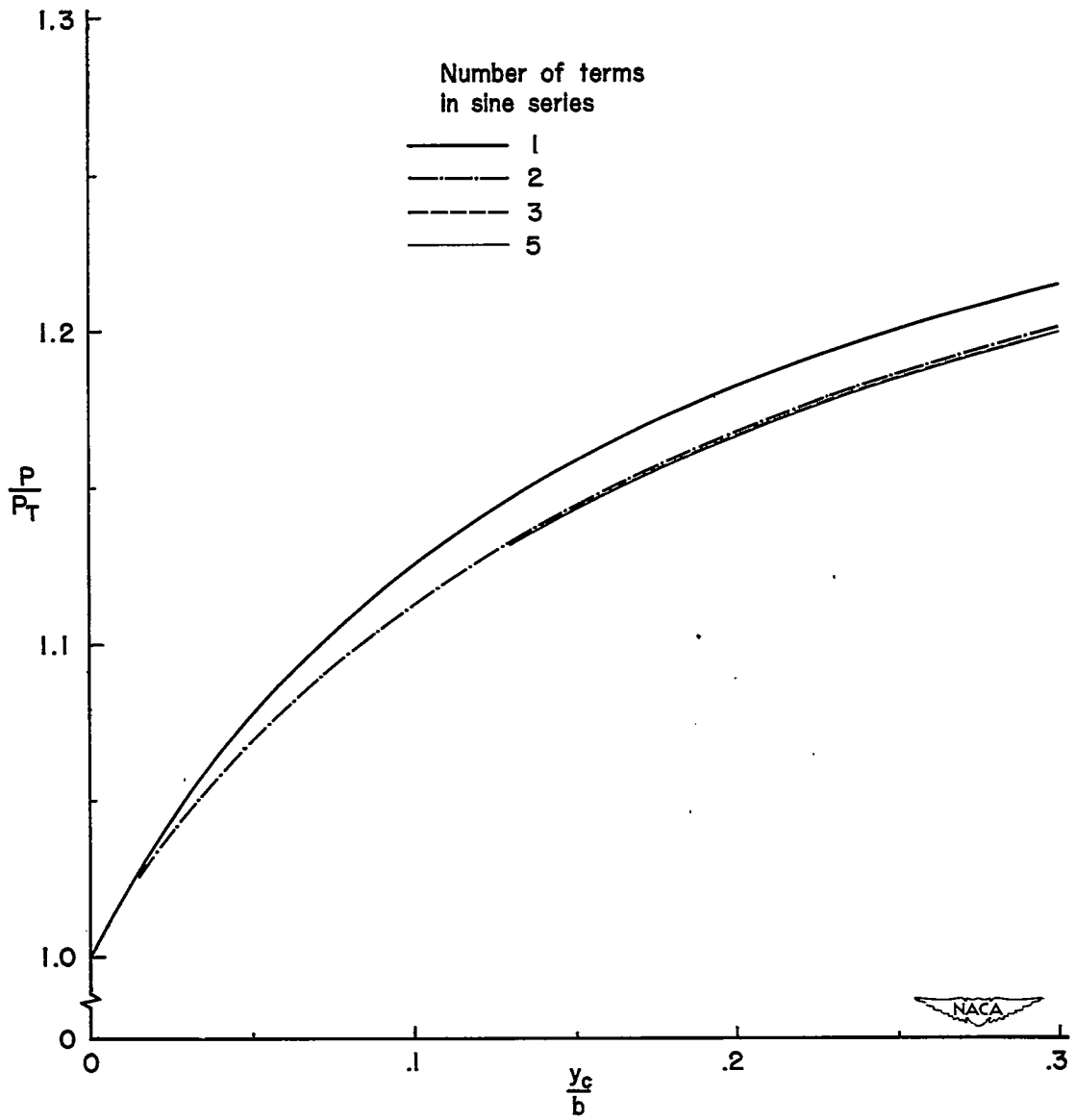

Figure 9.- Load-deflection curves for idealized H-section column with constant tangent modulus in the plastic range.

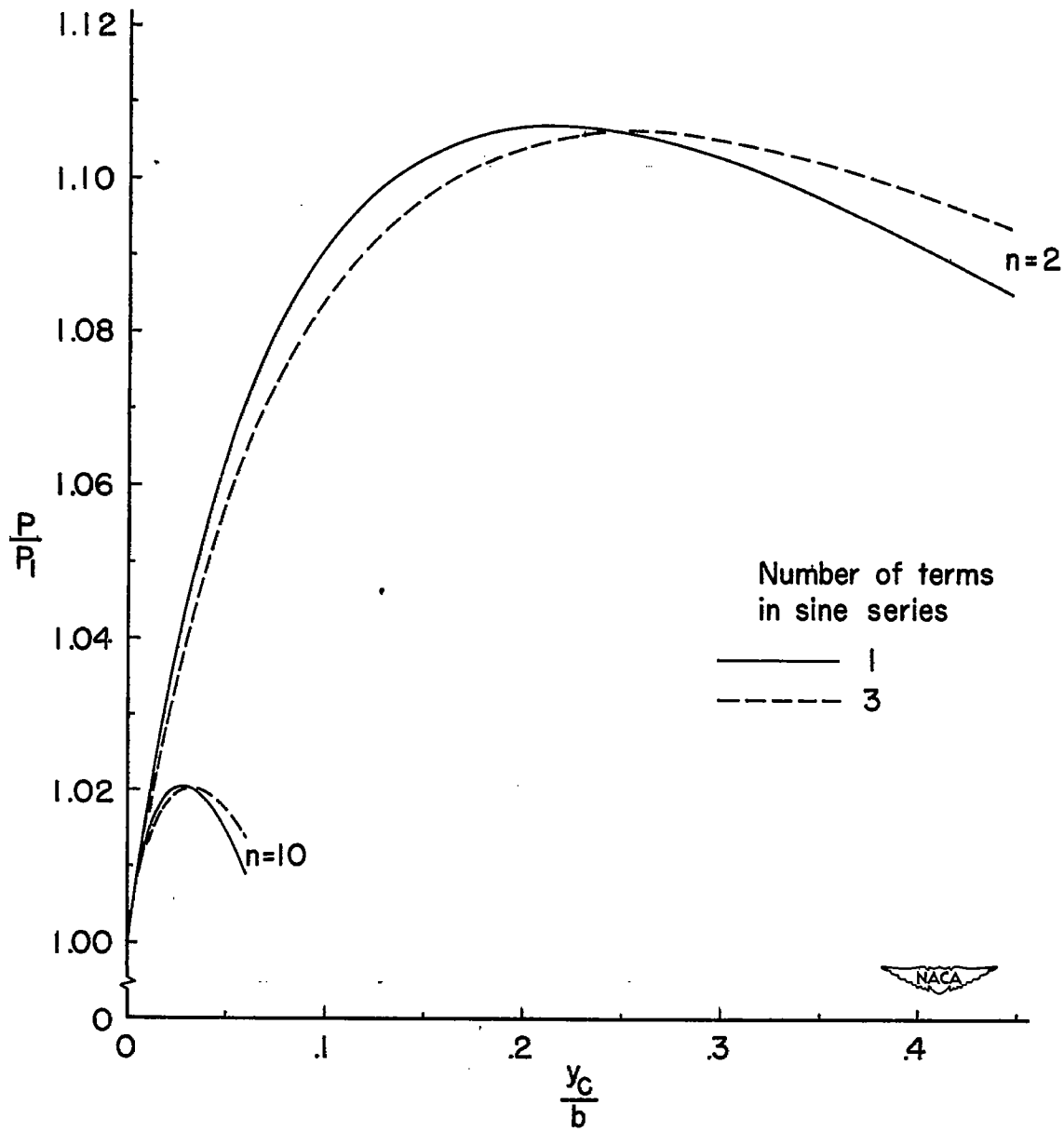

Figure 10.- Comparison between one- and three-term sine-series solutions of load-deflection curves for idealized H-section column.

NACA-Langley - 1-22-51 - 975