NACA TN 2493 8881

TECH LIBRARY KAFB, NM
0065496

NATIONAL ADVISORY COMMITTEE FOR AERONAUTICS

TECHNICAL NOTE 2493

ANALYSIS OF AN AXIAL COMPRESSOR STAGE WITH INFINITESIMAL AND FINITE BLADE SPACING

By H. J. Reissner and L. Meyerhoff

Polytechnic Institute of Brooklyn

Washington
October 1951

AFMDC
TECHNICAL LIBRARY
AFL 2811

TECH LIBRARY KAFB, NM

0065496

NATIONAL ADVISORY COMMITTEE FOR AERONAUTICS

TECHNICAL NOTE 2493

ANALYSIS OF AN AXIAL COMPRESSOR STAGE WITH INFINITESIMAL AND FINITE BLADE SPACING

By H. J. Reissner and L. Meyerhoff

SUMMARY

A method of designing circular blade systems of finite spacing is developed.

First, the theory of a flow through a system of infinitesimally spaced surfaces is formulated by means of a continuous axially symmetric force field which is uniform in the circumferential direction. This force field replaces the effect of the blade system, with its hub and shroud boundary surfaces.

Second, the force field in the space between the blades, the hub, and the shroud is replaced in the equations of finite spacing by those inertia and pressure terms which were omitted in the equations of infinitesimal spacing. These terms will change the values of the flow variables of infinitesimal spacing.

In order to determine these changes, a series development is used for the velocity components and pressure functions in powers of a parameter function ψ. The series development in powers of ψ leads to equations of first, second, and higher orders for the determination of increments which correct the velocity and pressure functions. In this report only the equations of first and second order are derived explicitly. The solution of first order shows the important result that, at the entrance and the exit of the compressor stage, the force vector used for the infinitesimal spacing or, what is equivalent, the increments of odd order must be zero at entrance and exit. This is necessary in order to prevent discontinuity of pressure and velocity at inflow and outflow. This conclusion is taken into account in a detailed determination of the flow variables of infinitesimal spacing. In this way it is insured that in finite spacing no discontinuity appears, neither for the pressures nor for the velocities, except across the blade surfaces.

INTRODUCTION

The following steps are covered in the present paper in the development of a method of designing circular blade systems of finite spacing. First, the theory of a flow through a system of infinitesimally spaced surfaces is formulated by means of a continuous axially symmetric force field which is uniform in the circumferential direction. It replaces the effect of the blade, hub, and shroud boundary surfaces. Second, the force field in the space between the blades, the hub, and the shroud is replaced in the equations of finite spacing by those inertia and pressure terms which were omitted in the equations of infinitesimal spacing. These terms will change the values of the flow variables of infinitesimal spacing.

In order to determine these changes, a series development is used for the velocity components and pressure functions in powers of a parameter function ψ. This function is in a certain way connected with the angular distances between a system of streamlines (called "frozen" or "fixed") and the system of streamlines of finite spacing. The frozen streamlines, arranged at the desired spacing angle, are taken from the field of infinitesimal spacing and are shown not to change their form. The series development in powers of ψ leads to equations of first, second, and higher orders for the determination of increments which correct the velocity and pressure functions. In this report only the equations of first and second order are derived explicitly, though a higher development does not present any difficulties. The solutions of equations of first and second order are given.

In the equations of first order, which determine the increments of the flow variables of first order, the force field and the flow variables of infinitesimal spacing and derivatives of the parameter function ψ appear. A triple redundancy of variables in these equations makes it necessary and of advantage to make appropriate assumptions for three redundant variables, in this case for the derivatives of ψ. These derivatives of ψ are valid for the equations of all orders. In this report they have only been applied for the equations of first and second order. However, only from the equations of first order the blade and streamline surfaces and also the pressure and velocity distributions of finite spacing are determined in this report.

The method of this determination applies the differential equations for the deformation in the angular and in the radial direction. Of the three functions $\delta\varphi$, δr, and ψ, one is redundant; $\delta\varphi$ is preferred as the redundant function in the form of a polynomial, which serves by means of its coefficients to obtain an appropriate airfoil shape and the

parameter function ψ. After this function ψ is determined, the increments of any order $\left(\text{e.g., } v_n\psi^n\right)$ of the flow variables can be calculated explicitly.

The solution of first order shows the important result that, at the entrance and the exit of the compressor stage, the force vector used for the infinitesimal spacing, that is, the increments (u_1 and so forth) of odd order, must be zero at entrance and exit. This is necessary in order to prevent discontinuity of pressure and velocity at inflow and outflow. The last part of this paper takes this conclusion into account in a detailed determination of the flow variables of infinitesimal spacing. In this way it is insured that in finite spacing no discontinuity appears, neither for the pressures nor for the velocities.

In the example, the circumferential velocity appears as a potential circulation, the power distribution becomes uniform, and the pressure distribution satisfies a prescribed average compression ratio and appears as gradually increasing with the radius.

This work was done at the Polytechnic Institute of Brooklyn under the sponsorship and with the financial assistance of the National Advisory Committee for Aeronautics.

SYMBOLS

r, φ, z	cylindrical coordinates
u, v, w	velocity components in r, φ, and z directions, respectively
p	pressure
ρ	density
P	enthalpy (pressure-density function) $\left(\int \frac{dp}{\rho}\right)$
k_r, k_φ, k_z	impressed force intensity per unit of mass in r, φ, and z directions, respectively; used for infinitesimal spacing
γ	ratio of specific heats
ψ	angle indicating angular distance from a streamline surface of infinitesimal spacing

$\bar{r} \equiv r/r_e$

$\zeta \equiv z/l$

α spacing angle

Subscripts:

o flow functions in a blade system of infinitesimal spacing

1, 2, 3, . . . orders of development in powers of ψ

in (entrance) intake position at leading edges of blades

ex (exit) outflow position at trailing edges of blades

i hub radii

e shroud radii

GENERAL ANALYSIS

Infinitesimal Spacing

A detailed account of the analysis for infinitesimal spacing is given in references 1 and 2. An outline of this previous work is repeated here since it is necessary for the further extension to finite spacing.

It is shown in reference 1 that the action of a blade system with its hub and shroud (which rotates with constant speed) can be expressed for the case of infinitesimal spacing by a force field of axial symmetry and circumferential uniformity. This force field is denoted by

$$k_r, \quad k_\varphi, \quad k_z; \text{ Force/Mass}$$

The further assumption of nonviscous and isentropic flow makes it convenient to introduce the enthalpy function P, which replaces the two variables p and ρ and simplifies the analysis. Based on the relation

$$p/p_{in} = \left(\rho/\rho_{in}\right)^\gamma$$

the enthalpy function $P = \int dp/\rho$ becomes

$$P = \frac{\gamma}{\gamma - 1} p/\rho$$

Eliminating p, one obtains

$$\frac{\rho}{\rho_{in}} = \left(\frac{P}{P_{in}}\right)^{\frac{1}{\gamma-1}}$$

where

$$P_{in} = \frac{\gamma}{\gamma - 1} \frac{p_{in}}{\rho_{in}}$$

The subscript $(\ )_{in}$ denotes values at the intake station.

The dynamic (Euler) equations of flow are referred to a cylindrical coordinate system (r, φ, z) rotating with the constant velocity ω in which the corresponding velocity components are u, v, and w.

The system of equations governing an axially symmetric, circumferentially uniform motion, characterized by the subscript o, is given by (see reference 1)

(a) The dynamic equations

$$u_o \frac{\partial u_o}{\partial r} + w_o \frac{\partial u_o}{\partial z} - \frac{v_o^2}{r} - \omega^2 r - 2v_o\omega + \frac{\partial P_o}{\partial r} = k_r \tag{1a}$$

$$u_o \frac{\partial v_o}{\partial r} + w_o \frac{\partial v_o}{\partial z} + \frac{v_o u_o}{r} + 2u_o\omega = k_\varphi \tag{1b}$$

$$u_o \frac{\partial w_o}{\partial r} + w_o \frac{\partial w_o}{\partial z} + \frac{\partial P_o}{\partial z} = k_z \tag{1c}$$

(b) The condition of nonviscous flow

$$k_r u_o + k_\varphi v_o + k_z w_o = 0 \tag{1d}$$

(c) The continuity equation

$$(\gamma - 1)P_o\left[\frac{\partial(u_o r)}{r\,\partial r} + \frac{\partial w_o}{\partial z}\right] + u_o\frac{\partial P_o}{\partial r} + w_o\frac{\partial P_o}{\partial z} = 0 \tag{1e}$$

All derivatives with respect to φ are omitted, because circumferentially uniform symmetry is required.

(d) The Bernoulli energy integral. If the dynamic equations (equations (1a), (1b), and (1c)) are multiplied by u, v, and w, respectively, added, and the condition (1d) of nonviscous flow is observed, the energy equation <u>along any streamline</u> is obtained; namely,

$$q^2 - (\omega r)^2 + 2P = q_{in}^2 - \left(\omega r_{in}\right)^2 + 2P_{in} \tag{1f}$$

where

$$q^2 = u^2 + v^2 + w^2 \tag{1g}$$

The five equations (equations (1a) to (1f)) contain seven unknown variables (u, v, w, P, k_r, k_φ, and k_z). Therefore two variables are prescribable. The prescription of the enthalpy function P and one of the velocity components u or w seems most appropriate to solve the continuity equation (1e). The procedure is shown in references 1 and 2 and also in the example discussed in a later section of this report.

Transition to Finite Spacing

The flow through a blade system of finite spacing, in contradistinction to the case of infinitesimal spacing, is not uniformly symmetric in the circumferential direction. Because of this fact, the dynamic equations and the continuity equation must be complemented by the $\partial/\partial\varphi$ terms and freed from the force-field components (k_r, k_φ, and k_z).

The complemented equations must be written in the following form:

The dynamic equations

$$w \frac{du}{dz} - \frac{v^2}{r} - 2v\omega - \omega^2 r + \frac{\partial P}{\partial r} = 0 \tag{2a}$$

$$w \frac{dv}{dz} + \frac{vu}{r} + 2u\omega + \frac{\partial P}{r\partial\varphi} = 0 \tag{2b}$$

$$w \frac{dw}{dz} + \frac{\partial P}{\partial z} = 0 \tag{2c}$$

The continuity equation

$$w \frac{dP}{dz} + (\gamma - 1)\ P\left(\frac{\partial ur}{r\ \partial r} + \frac{\partial v}{r\ \partial\varphi} + \frac{\partial w}{\partial z}\right) = 0 \tag{2d}$$

where

$$\frac{d}{dz} = \frac{\partial}{\partial r}\frac{u}{w} + \frac{\partial}{r\ \partial\varphi}\frac{v}{w} + \frac{\partial}{\partial z}$$

and

$$\frac{\partial ur}{r\ \partial r} + \frac{\partial v}{r\ \partial\varphi} + \frac{\partial w}{\partial z} = \operatorname{div}\ (\overline{q})$$

The physical interpretation of transition to finite spacing, by giving up the uniform axial symmetry, may be stated as follows: The streamlines calculated for infinitesimal spacing are no longer in dynamic equilibrium, if the original force field is abandoned and the circumferential $(\partial/\partial\varphi)$ inertia forces are added. However, one set of streamlines,

of a number given by the required number of blades, can be shown to remain in dynamic equilibrium. All other streamlines will be shifted and deformed by the removal of the original force field and the addition of the circumferential inertia forces and pressure gradients; this means that the flow variables u, v, w, and P will be changed, the change evidently increasing with the distance from the unchanged streamline.

The values of these changed variables may be written in the form

$$\left.\begin{aligned} u &= u_o + U \\ v &= v_o + V \\ w &= w_o + W \\ P &= P_o + \Pi \end{aligned}\right\} \tag{3}$$

where, in the analysis to follow, the values of U, V, W, and Π are assumed to be so small that powers and products of these functions higher than the first and their derivatives can be neglected.[1] This assumption must of course be justified by the order of magnitude of the results.

If, with these assumptions, equations (1a) to (1e) and (2a) to (2d) corresponding to one another are subtracted, the resulting system of equations appears in the following form:

$$w_o \frac{dU}{dz} + U \frac{\partial u_o}{\partial r} + W \frac{\partial u_o}{\partial z} - 2 \frac{V}{r}\left(v_o + \omega r\right) + \frac{\partial \Pi}{\partial r} = -k_r \tag{4a}$$

$$w_o \frac{dV}{dz} + U \frac{\partial v_o}{\partial r} + W \frac{\partial v_o}{\partial z} + 2 \frac{U}{r}\left(v_o + \omega r\right) - \frac{U}{r} v_o + \frac{V}{r} u_o + \frac{1}{r} \frac{\partial \Pi}{\partial \varphi} = -k_\varphi \tag{4b}$$

$$w_o \frac{dW}{dz} + U \frac{\partial w_o}{\partial r} + W \frac{\partial w_o}{\partial z} + \frac{\partial \Pi}{\partial z} = -k_z \tag{4c}$$

---

[1]In principle this assumption is not necessary for the method of development in terms of the powers of the spacing parameter ψ introduced below; it is used here only for the sake of simplicity.

$$w_o \frac{d\Pi}{dz} + (\gamma - 1)\Pi\left(\frac{1}{r}\frac{\partial u_o r}{\partial r} + \frac{\partial w_o}{\partial z}\right) + U\frac{\partial P_o}{\partial r} + W\frac{\partial P_o}{\partial z} +$$

$$(\gamma - 1)P_o\left(\frac{1}{r}\frac{\partial Ur}{\partial r} + \frac{1}{r}\frac{\partial V}{\partial \varphi} + \frac{\partial W}{\partial z}\right) = 0 \tag{4d}$$

In these equations the force components k_r, k_φ, and k_z and all other terms with the subscript o must be considered as already determined from the analysis and computation of the system of infinitesimal spacing.

The next step of the analysis is the choice of an individual streamline of the stream field of infinitesimal spacing lying fixed in the stream field of finite spacing. On this "frozen" streamline the requirement will be enforced that all dependent variables (velocities and pressures) will be equal to those in the system of infinitesimal spacing, which means that this streamline will be in a dynamic equilibrium. As soon as one moves away from this streamline, the changes U, V, W, and II and also changes of the variables r, z, and φ will arise for the generation of dynamic equilibrium.

This change of variables may now be expressed by ψ as an angular parameter appearing in the following formulas:

$$\left.\begin{aligned} U &= \sum_{n=1} u_n(r,z)\psi^n \\ V &= \sum_{n=1} v_n(r,z)\psi^n \\ W &= \sum_{n=1} w_n(r,z)\psi^n \\ \Pi &= \sum_{n=1} P_n(r,z)\psi^n \end{aligned}\right\} \tag{5}$$

If the variables of infinitesimal spacing are taken into account, the formulas above change to

$$\left.\begin{aligned}
u &= u_o + \psi u_1(r,z) + \psi^2 u_2(r,z) + \ldots \\
v &= v_o + \psi v_1(r,z) + \psi^2 v_2(r,z) + \ldots \\
w &= w_o + \psi w_1(r,z) + \psi^2 w_2(r,z) + \ldots \\
P &= P_o + \psi P_1(r,z) + \psi^2 P_2(r,z) + \ldots
\end{aligned}\right\} \qquad (5a)$$

In the analysis to follow, only the terms of first and second order shall be developed.

In order to express equations (4a) to (4d) in terms of the series development (5a), the derivatives of equations (4a) to (4d) must be expressed as shown by the following examples:

$$\left.\begin{aligned}
w_o \frac{dU}{dz} &= w_o\left[u_1 \frac{d\psi}{dz} + \psi\left(\frac{du_1}{dz} + 2u_2 \frac{d\psi}{dz}\right)\right] \\
\frac{\partial \Pi}{\partial r} &= P_1 \frac{\partial \psi}{\partial r} + \psi\left(\frac{\partial P_1}{\partial r} + 2P_2 \frac{\partial \psi}{\partial r}\right) \\
\frac{\partial \Pi}{\partial \varphi} &= P_1 \frac{\partial \psi}{\partial \varphi} + 2\psi P_2 \frac{\partial \psi}{\partial \varphi}
\end{aligned}\right\} \qquad (6)$$

Derivatives of the type shown above must now be inserted in equations (4a) to (4d). If then the terms with the factor $\psi^o = 1$ (first order) and also the terms with the factor $\psi^1 = \psi$ (second order) are collected, two systems of equations are obtained. They must then be used to determine the values of the variables u_1, v_1, w_1, and P_1 and the values of the variables u_2, v_2, w_2, and P_2. There appear also the variables $\partial\psi/\partial r$, $\partial\psi/\partial\varphi$, and $\partial\psi/\partial z$, which must also be assumed or determined, as will be shown below.

Using the expressions of derivation as exampled above, one obtains the following two sets of equations.

The equations of <u>first order</u> of common factor $\psi^o = 1$ are as follows:

The dynamic equations

$$w_o \frac{d\psi}{dz} u_1 + P_1 \frac{\partial\psi}{\partial r} = -k_r \tag{7a}$$

$$w_o \frac{d\psi}{dz} v_1 + P_1 \frac{1}{r} \frac{\partial\psi}{\partial\varphi} = -k_\varphi \tag{7b}$$

$$w_o \frac{d\psi}{dz} w_1 + P_1 \frac{\partial\psi}{\partial z} = -k_z \tag{7c}$$

The energy (Bernoulli) integral based on $k_r u_o + k_\varphi v_o + k_z w_o = 0$

$$P_1 + u_o u_1 + v_o v_1 + w_o w_1 = 0 \tag{7d}$$

The continuity equation

$$w_o \frac{d\psi}{dz} P_1 + (\gamma - 1)P_o\left(u_1 \frac{\partial\psi}{\partial r} + \frac{v_1}{r} \frac{\partial\psi}{\partial\varphi} + w_1 \frac{\partial\psi}{\partial z}\right) = 0 \tag{7e}$$

The equations of <u>second order</u> of common factor $\psi^1 = \psi$ are as follows:

The dynamic equations

$$2P_2 \frac{\partial\psi}{\partial r} = -w_o \frac{du_1}{dz} - u_1 \frac{\partial u_o}{\partial r} - w_1 \frac{\partial u_o}{\partial z} + 2 \frac{v_1}{r} (v_o + \omega r) - \frac{\partial P_1}{\partial r} - 2u_2 w_o \frac{d\psi}{dz} \tag{8a}$$

$$2P_2 \frac{1}{r} \frac{\partial\psi}{\partial\varphi} = -w_o \frac{dv_1}{dz} - u_1 \frac{\partial v_o}{\partial r} - w_1 \frac{\partial v_o}{\partial z} - 2 \frac{u_1}{r} (v_o + \omega r) + \frac{u_1 v_o - u_o v_1}{r} - 2v_2 w_o \frac{d\psi}{dz} \tag{8b}$$

$$2P_2 \frac{\partial\psi}{\partial z} = -w_o \frac{dw_1}{dz} - u_1 \frac{\partial w_o}{\partial r} - w_1 \frac{\partial w_o}{\partial z} - \frac{\partial P_1}{\partial z} - 2w_2 w_o \frac{d\psi}{dz} \tag{8c}$$

The continuity equation

$$2P_2 w_o \frac{d\psi}{dz} = -u_1 \frac{\partial P_o}{\partial r} - w_1 \frac{\partial P_o}{\partial z} - w_o \frac{dP_1}{dz} - (\gamma - 1)\left[P_1\left(\frac{\partial u_o}{\partial r} + \frac{u_o}{r} + \frac{\partial w_o}{\partial z}\right) + P_o\left(\frac{\partial u_1 r}{r\,\partial r} + \frac{\partial w_1}{\partial z} + 2u_2 \frac{\partial\psi}{\partial r} + 2v_2 \frac{\partial\psi}{r\,\partial\varphi} + 2w_2 \frac{\partial\psi}{\partial z}\right)\right] \tag{8d}$$

VARIABLES FOR FINITE SPACING

The Parameter Function ψ

A simple method of successive solutions for the flow variables of successive orders can be developed by an appropriate choice of the partial derivatives of the parameter ψ. The choice of ψ is arbitrary (within certain limits), because the four equations (equations (7a) to (7e)) contain seven variables (namely, u_1, w_1, P_1, $\partial\psi/\partial r$, $\partial\psi/\partial\varphi$, and $\partial\psi/\partial z$). The fifth equation (equation (7d)) is satisfied identically as seen below.

The following assumptions for the redundant functions prove to be appropriate for the blade design:

$$\left.\begin{aligned} \frac{\partial\psi}{\partial z} &= f\left(z, \psi_{in}, r_{in}\right) \\ \frac{\partial\psi}{\partial\varphi} &= 0 \\ \frac{\partial\psi}{\partial r} &= 0 \end{aligned}\right\} \tag{9}$$

For a single streamline ψ_{in} and r_{in} are constant parameters, but for a field of streamlines they are functions of φ and r, respectively.

The total derivative of ψ then becomes

$$\left.\begin{aligned} \frac{d\psi}{dz} &= f\left(z,\psi_{in},r_{in}\right) = \frac{\partial\psi}{\partial z} \\ \text{and} \qquad & \\ \psi &= \int f\left(z,\psi_{in},r_{in}\right) dz + \text{Constant} \end{aligned}\right\} \tag{9a}$$

The function f above will be formulated in the next section such as to be adapted to the design of the blade profile and the streamline between the blades.

Variables of First Order

As a result of equations (9) one obtains from the dynamic equations (7a) to (7c)

$$u_1 w_o \frac{d\psi}{dz} = -k_r \tag{10a}$$

$$v_1 w_o \frac{d\psi}{dz} = -k_\varphi \tag{10b}$$

$$w_1 w_o \frac{d\psi}{dz} = -\left(k_z + P_1 \frac{d\psi}{dz}\right) \tag{10c}$$

These values, inserted in the energy integral (7d), as mentioned above, satisfy it identically.

The continuity equation (7e) furnishes the relations for P_1; namely,

$$P_1 = -\frac{w_1}{w_o}(\gamma - 1)P_o \tag{11}$$

which, combined with the relation for w_1 given by equation (10c) yield

$$P_1 = \frac{P_o(\gamma - 1)k_z}{P_o(\gamma - 1) - w_o^2} \Bigg/ \frac{d\psi}{dz} \tag{11a}$$

$$w_1 = k_z \frac{w_o}{P_o(\gamma - 1) - w_o^2} \Bigg/ \frac{d\psi}{dz} \tag{11b}$$

so that first-order terms are expressed by quantities known from the equations of infinitesimal spacing.

Boundary Conditions for Force Field of Infinitesimal Spacing

To prevent flow discontinuities at entrance and exit, the values of the series terms of odd powers in $\pm\psi$, like $\pm u_1\psi$, $\pm v_1\psi$, and so forth, must become zero at entrance and exit. By inspection of the results of first order given above, it is seen readily that this condition is satified if the values of k_r, k_φ, and k_z of the force-field intensity in the field of infinitesimal spacing are zero at intake and exit. This requires anticipated restrictions in the integration of the equations of infinitesimal spacing. These restrictions will be applied in a following section.

Variables of Second Order

Equations (8a) to (8d) show readily the solution for the variables u_2, v_2, w_2, and P_2 $\left(\text{for the assumptions given above of } \frac{\partial\psi}{\partial r} = 0, \frac{\partial\psi}{\partial\varphi} = 0, \text{ and } \frac{\partial\psi}{\partial z} = \frac{d\psi}{dz} \equiv \psi_z\right)$; namely,

$$u_2 = \frac{1}{2w_o\psi_z}\left(-w_o \frac{du_1}{dz} - u_1 \frac{\partial u_o}{\partial r} - w_1 \frac{\partial u_o}{\partial z} + 2 \frac{v_1}{r} v_{o,abs.} - \frac{\partial P_1}{\partial r}\right) \tag{12a}$$

$$v_2 = \frac{1}{2w_o\psi_z}\left(-w_o \frac{dv_1}{dz} - u_1 \frac{\partial v_o}{\partial r} - w_1 \frac{\partial v_o}{\partial z} - 2 \frac{u_1}{r} v_{o,abs.} + \frac{u_1 v_o - u_o v_1}{r}\right) \tag{12b}$$

$$w_2 = \frac{1}{2w_o\psi_z}\left(-w_o \frac{dw_1}{dz} - u_1 \frac{\partial w_o}{\partial r} - w_1 \frac{\partial w_o}{\partial z} - \frac{\partial P_1}{\partial z} - 2P_2\psi_z\right) \tag{12c}$$

$$P_2 = \frac{1}{2w_o\psi_z}\left\{-u_1 \frac{\partial P_o}{\partial r} - w_1 \frac{\partial P_o}{\partial z} - w_o \frac{dP_1}{dz} - (\gamma - 1)\left[P_1\left(\frac{\partial u_o}{\partial r} + \frac{u_o}{r}\right) + P_o\left(\frac{\partial u_1 r}{r\,\partial r} + \frac{\partial w_1}{\partial z} + 2w_2\psi_z\right)\right]\right\} \tag{12d}$$

The solutions of the first- and second-order equations with the choice $d\psi/dz \neq 0$ have the advantage that the first-order solutions are independent of the second-order solutions.

STREAMLINES OF FINITE SPACING OF FIRST ORDER

In the method applied in this paper, the streamlines of finite spacing are derived from a finitely spaced set of infinitesimal ("fixed" or "frozen") streamlines. For this procedure one has to consider first the derivation of a blade profile between a pair of frozen streamlines and secondly the derivation of free streamlines between one frozen streamline of the pair and one side of the blade profile. This will be done by introducing the tangent equations of the blade and the free streamlines in the following manner.

Streamline Equations of Finite Spacing

The streamline equations of finite spacing are

$$\frac{dr}{dz} = \frac{u}{w} = \frac{u_o + u_1\psi}{w_o + w_1\psi} = \left(\frac{dr_o}{dz}\right)\frac{1 + \psi u_1/u_o}{1 + \psi w_1/w_o} \tag{13a}$$

$$r\,\frac{d\varphi}{dz} = \frac{v}{w} = \frac{v_o + v_1\psi}{w_o + w_1\psi} = r_o\,\frac{d\varphi_o}{dz}\,\frac{1 + \psi v_1/v_o}{1 + \psi w_1/w_o} \tag{13b}$$

If it is anticipated that ψu_1, ψw_1, and ψv_1 are sufficiently small compared with unity, the equations above can be changed to

$$\frac{d(r - r_o)}{dz} = \frac{d(\varphi r)}{dz} = \psi \frac{u_o}{w_o}\left(\frac{u_1}{u_o} - \frac{w_1}{w_o}\right) \tag{13c}$$

$$\frac{r\ d\varphi - r_o\ d\varphi_o}{dz} = r_o \frac{d(\delta\varphi)}{dz} + \delta r \frac{d\varphi_o}{dz} = \psi \frac{v_o}{w_o}\left(\frac{v_1}{v_o} - \frac{w_1}{w_o}\right) \tag{13d}$$

and, after the application of the expressions (10a), (11a), and (11b) of the variables of first order,

$$\frac{d(\delta r)}{dz} = \frac{\psi}{\psi'}\left(-\frac{k_r}{{w_o}^2} + \frac{u_o}{w_o}\frac{k_z}{P_o(\gamma - 1) - {w_o}^2}\right) \tag{13e}$$

$$r_o \frac{d(\delta\varphi)}{dz} + \delta_r \frac{d\varphi_o}{dz} = \frac{\psi}{\psi'}\left(-\frac{k_\varphi}{{w_o}^2} - \frac{v_o}{w_o}\frac{k_z}{P_o(\gamma - 1) - {w_o}^2}\right) \tag{13f}$$

and $\psi' \equiv \frac{d\psi}{dz}$.

The above two equations (equations (13e) and (13f)) alone control the three functions of z (ψ, $\delta\varphi$, and δr). Hence one of these functions can be prescribed and the others derived from it. It seems appropriate to prescribe $\delta\varphi = f(z)$, since $\delta\varphi$ mainly determines the airfoil shape (which is the primary objective).

Streamline Deformations δr and $\delta\varphi$

Equations (13e) and (13f) may now be applied to derive, by means of the prescription for $\frac{d(\delta\varphi)}{dz}$, the deformation $\frac{d(\delta r)}{dz}$ and the function of the parameter ψ.

It is then advisable to introduce from equations (13e) and (13f) the following abbreviations:

$$\left.\begin{aligned} H_r &= -\frac{k_r}{w_o^2} + \frac{u_o}{w_o}\frac{k_z}{P_o(\gamma - 1) - w_o^2} \\ H_\varphi &= -\frac{k_\varphi}{w_o^2} + \frac{v_o}{w_o}\frac{k_z}{P_o(\gamma - 1) - w_o^2} \end{aligned}\right\} \tag{14}$$

The terms H_r and H_φ are known functions of z along the streamlines of infinitesimal spacing. In the next section the flow variables of infinitesimal spacing (k_r, k_φ, k_z, u_o, v_o, w_o, and P_o) appearing in the functions H_r and H_φ are determined such that the conditions of prevention of discontinuities are satisfied at entrance and exit.

The elimination of the expression $\psi/\psi' \equiv 1\Big/\frac{d(\log_e \psi)}{dz}$ from equations (13e) and (13f) gives

$$\frac{d(\delta r)}{dz} - (\delta r)\frac{H_r}{H_\varphi}\frac{v_o}{r_o w_o} = r_o \frac{H_r}{H_\varphi}\frac{d(\delta\varphi)}{dz} \tag{15}$$

The integration of this equation leads to

$$\delta r = e^{Z_2}\left(c + \int_0^z e^{-Z_2} Z_1 \, dz\right) \tag{15a}$$

where $c = 0$ in order to make $\delta r = 0$ at $z = 0$, and

$$\left.\begin{aligned} Z_1 &= \frac{d(\delta\varphi)}{dz}\frac{H_r}{H_\varphi} \\ Z_2 &= \int_0^z \frac{H_r}{H_\varphi}\left(\frac{v_o}{r_o w_o}\right) dz \end{aligned}\right\} \tag{15b}$$

Here Z_1 is an arbitrary function of z, determined by the choice of the deformation function $\delta\varphi$, which latter prescribes the airfoil profile; Z_2 is a function given by the flow variables of infinitesimal spacing.

The function $\delta\varphi$ will be assumed as a polynomial

$$\delta\varphi = \beta\alpha_{\pm}\left(r_e - r_{in}\right) \sum_{n=1}^{n=n_f} a_n z^n \qquad \beta\alpha \equiv \psi_{in} \tag{16}$$

where $n_f \equiv n_{final}$ and the coefficients a_n must be determined such that $\delta\varphi$ and δr equal zero at entrance and exit and also such that the profile boundary has the shape of an airfoil. The factor $\alpha_{\pm}$ indicates the angular distance of the entrance point of a blade streamline from the next frozen streamline, β indicates the distance of an intermediate free streamline, and $\alpha_+ + \alpha_- = \alpha$, the spacing angle. (See figs. 1 and 2.)

The purpose of the factor $\left(r_e - r_{in}\right)$ is to make the inside of the casing, along which the blades rotate, cylindrical. This is shown by equation (15a) which explicitly written is

$$\delta r = e^{Z_2} \int_0^z e^{-Z_2} \beta\alpha\left(r_e - r_{in}\right) \sum a_n n z^{n-1} \frac{H_r}{H_\varphi}\, dz \tag{15c}$$

Determination of Function ψ

The parameter function ψ can be found by means of equations (13e), (15a), and (16) as follows:

$$d\left(\log_e \psi\right) \Big/ dr = H_r \Big/ \frac{d(\delta r)}{dz} \tag{17}$$

$$\psi = c_1 \exp \int_0^z H_r\, dz \Big/ \frac{d(\delta r)}{dz} \tag{17a}$$

where at the entrance point $(z = 0)$ it is seen that $c_1 = \psi_{in} = \beta\alpha$ locates the leading-edge points of the blade profile. This definition is

also true for the free streamline surfaces between one of the frozen surfaces and the blade surface. It may be expressed in the following manner: $\psi = \beta\alpha_{\pm}$ at $z = 0$ (since $\psi = c_1 = \beta\alpha_{\pm}$ at $z = 0$), where β is a constant varying from 0 to 1, that is, from the leading edge of a frozen streamline to the leading edge of a free streamline surface $(0 < \beta < 1)$ and to the leading edge of a blade surface for $\beta = 1$ (see fig. 1).

Conditions for Closing of Leading and Trailing Edges of Blade Profiles

The streamlines forming a blade profile must intersect at the leading edge $(z = 0)$ and at the trailing edge $(z = 1)$. This condition must be formulated by $\delta r = 0$ and $\delta\varphi = 0$ at $z = 0$ and $z = 1$. The condition is satisfied identically for $z = 0$ if in equation (15a) the integration constant c is made equal to zero; this is seen from equation (15a) (if $c = 0$) and from equation (16). For the trailing edge $z = l$, one has to require that

$$\left(\delta r\right)_{z=l} = \int_0^l Z_1 \exp\left(-Z_2\right) dz = 0 \tag{18a}$$

and

$$\left(\delta\varphi\right)_{z=l} = \beta\alpha_{\pm}\left(r_e - r_{in}\right) \sum_{n=1}^{n=n_f} \left(a_n l^n\right) = 0 \tag{18b}$$

Both conditions must be satisfied by means of the coefficients a_n appearing in the power series of $\delta\varphi$ and in the function Z_1.

Special Case of a Blade Profile with One Side Coinciding with a Streamline Surface of Infinitesimal Spacing

The determination of the blade shape can be simplified by prescribing $\psi = 0$ on one side of one of a pair of the frozen streamlines; for instance, $\psi_- = 0$. It follows then from equations (13a) and (13b) that δr_- and $\delta\varphi_-$ are also zero for this streamline. With this

prescription, this side of the blade profile retains the shape of the streamline surface of infinitesimal spacing. The other side of the blade profile must then be approached from the other one of the pair of frozen streamlines, which is located at the spacing angle distance α from the first one of the pair (see fig. 2). This makes $\psi_+ = \alpha$ at entrance and exit, so that $\delta\varphi_+$ and δr_+ give the other side of the blade profile by means of equations (15a), (16), and (17a). The values of $\psi = \beta\alpha$, where $\beta \neq 1$ or $\neq 0$ furnish the free streamlines between the blades by means of equations (15a) and (16).

FLOW VARIABLES OF INFINITESIMAL SPACING WHICH SATISFY CONTINUITY CONDITIONS OF FINITE SPACING

Boundary Conditions and Available Assumptions for Solutions of Equations of Infinitesimal Spacing

The boundary conditions and available assumptions for the solutions of equations (1a) to (1f) of infinitesimal spacing are given as follows in items 1 to 7:

(1) The ratio of radial and axial velocity

$$\left(u_o/w_o\right) << 1$$

(2) The axial velocity w_o to be constant; that is,

$$w_o = w_{in} = \text{Constant}$$

(3) The absolute circumferential velocity to be zero at the intake;[2] that is,

$$v_{abs.,in} = v_{in} + \omega r_{in} = 0$$

(4) The fact that the enthalpy compression ratio m across one stage differs very little from unity; that is,

$$m = p_{ex}/p_{in} = \left(p_{ex}/p_{in}\right)^{\frac{\gamma-1}{\gamma}} = \left(p_{ex}/p_{in}\right)^{0.286}$$

[2]A prerotation $\left(v_{abs.,in} \neq 0\right)$ would not give any difficulty.

so that one can write

$$P_o/P_{in} = 1 + \epsilon$$

where $\epsilon << 1$. (For example, if $p_{o,ex}/p_{in} = 1.2$, then $P_{o,ex}/P_{in} = 1.2^{0.286} = 1.052$.)

(5) The function ϵ is assumed in the form

$$\epsilon = R(\bar{r})Z(\zeta)$$

with the length ratios

$$\frac{r}{r_e} \equiv \bar{r}$$

$$\frac{z}{l} \equiv \zeta$$

where

r_e shroud radius (constant)

l' length of a single stage

The functions $R(\bar{r})$ and $Z(\zeta)$ must be determined from the boundary conditions given below.

(6) The radial velocity u_o to be zero at intake and exit; that is, $u_o = 0$ at $\zeta = 0$ and $\zeta = 1$; furthermore, in consideration of the conditions that $P_1 = 0$ and in consequence $k_r = 0$ at $\zeta = 0$ and at $\zeta = 1$, it shall be required that $\frac{du_o}{d\zeta} = 0$ at $\zeta = 0$ and $\zeta = 1$.

(7) As a consequence of the restrictions on k_r, k_φ, and k_z (see the dynamic equations of infinitesimal spacing (1a) to (1f)), due to the requirements in items (6) and (2), it is necessary to impose the following boundary conditions for the enthalpy P_o; namely,

(a) $\frac{\partial P_o}{\partial \zeta} = 0$ at $\zeta = 0$ and 1.0, to satisfy $k_z = 0$ at $\zeta = 0$ and 1

(b) $\frac{\partial P_o}{\partial \bar{r}} = 0$ at $\zeta = 0$, to satisfy $k_r = 0$ at $\zeta = 0$

(c) $\frac{\partial P_o}{\partial \bar{r}} = P_{in} \frac{\partial \epsilon}{\partial \bar{r}} = \left(v_o + \omega \bar{r} r_e\right)^2 \bar{r}^{-1}$, at $\zeta = 1$, to make $k_r = 0$ at $\zeta = 1$

(d) $\frac{\partial^2 P}{\partial \zeta^2}$ at $\zeta = 0$ and $\zeta = 1$ (see equation (20a) and item (5))

Finally, it is required that the average enthalpy rise be

(e) $m_{average} = \left(P_o/P_{in}\right)_{average} = m^*$ at $\zeta = 1$ (across the exit section)

Variation of Radial Velocity

With the relations of items (1), (2), and (4) and the length ratio $\zeta = z/l$ the continuity equation (1e) becomes

$$\frac{\partial u_o \bar{r}}{\bar{r}\, \partial \bar{r}} = -2.5 \frac{r_e}{l} w_{in} \frac{\partial \epsilon}{\partial \zeta}$$

With the separation of variables for ϵ in item (5) the integral of the equation above is

$$u_o \bar{r} = -2.5 \frac{r_e}{l} w_{in} \frac{\partial Z(\zeta)}{\partial \zeta} \int_{\bar{r}_i}^{\bar{r}} R(\bar{r})\bar{r}\, d\bar{r} + F(\zeta) \tag{19}$$

In order to satisfy the condition that the shroud shall be cylindrical ($u_{o,e} = 0$, $\bar{r}_e = 1$), the arbitrary function F must be

$$F(\zeta) = 2.5 \frac{r_e}{l} w_{in} \frac{\partial Z(\zeta)}{\partial \zeta} \int_{\bar{r}_i}^{1} R(\bar{r})\bar{r}\, d\bar{r}$$

where

$$\int_{\bar{r}_i}^{\bar{r}_e=1} R\bar{r}\, d\bar{r} = \text{Constant}$$

Equation (19) is then changed to

$$u_o\bar{r} = 2.5\,\frac{r_e}{l}\,w_{in}\,\frac{\partial Z}{\partial \zeta}\int_{\bar{r}}^{1} R\bar{r}\,d\bar{r} \tag{20}$$

The requirement of item (6) that $u_o = 0$ at $\zeta = 0$ and $\zeta = 1$ is obviously satisfied by the condition that $\left(\frac{\partial Z}{\partial \zeta}\right)_{\zeta=0,\,\zeta=1} = 0$. The second condition of item (6) that $\frac{du_o}{d\zeta} = 0$ at $\zeta = 0$ and $\zeta = 1$ is, as one sees by differentiation of equation (20),

$$\frac{\partial^2 Z}{\partial \zeta^2} = 0 \quad \text{at} \quad \zeta = 0 \quad \text{and} \quad \zeta = 1 \tag{20a}$$

Enthalpy (Pressure) Variation in Axial and Radial Directions

The boundary condition (c) of item (7) requires that the enthalpy derivative $\frac{\partial P_o}{\partial \bar{r}}$ at $\zeta = 1$ must be a function of the velocity $\left(v_o\right)_{\zeta=1}$ expressed by

$$P_{in}\,\frac{\partial \epsilon}{\partial \bar{r}} = \left(v_o + \omega\bar{r}r_e\right)^2 \bar{r}^{-1} \tag{21}$$

Along any streamline, the general expression for v_o is given by the Bernoulli energy integral (1f). This equation, with the conditions in items (1) and (4), becomes

$$v_o{}^2 = -2\epsilon P_{in} + (\omega\bar{r})^2 r_e{}^2 \tag{22}$$

By partial differentiation of equation (22), from one streamline surface to another, one obtains along the stage length and for this case at the exit cross section

$$P_{in}\,\frac{\partial \epsilon}{\partial \bar{r}} = -v_o\,\frac{\partial v_o}{\partial \bar{r}} + \omega^2\bar{r}r_e{}^2 \tag{22a}$$

If $P_{in} \frac{\partial \epsilon}{\partial \bar{r}}$ is eliminated by means of equations (21) and (22a), the following equation appears for v_o at $\zeta = 1$:

$$\frac{\partial v_o}{\partial \bar{r}} + \frac{v_o}{\bar{r}} = -2\omega r_e \tag{23}$$

and the integral

$$\left(v_o\right)_{\zeta=1} = -\left(\omega r_e\right)\bar{r} + A\bar{r}^{-1} \tag{23a}$$

or

$$\left(v_o + \omega \bar{r} r_e\right)_{\zeta=1} = \left(A/\bar{r}\right)_{\zeta=1} \tag{23b}$$

The significance of equation (23b) is the fact that the circumferential flow is a potential circulation.

The integration constant A must be positive since it indicates the value of the absolute circumferential velocity and the moment of momentum and also with it the torque and the power of the compressor. It will be shown later that the required values of the power controls the value of the constant A.

The necessary values and conditions are now available for the determination of the enthalpy function. In item (7) the enthalpy ratio is given in the form

$$\frac{P_o}{P_{in}} = 1 + R(\bar{r})Z(\zeta) \tag{24}$$

where it will be assumed that

$$Z = \left(a\zeta + b\zeta^2 + c\zeta^3 + d\zeta^4 + e\zeta^5\right)$$

and where the requirements to be satisfied are

$$Z = 0 \quad \text{at} \quad \zeta = 1$$

$$\frac{\partial Z}{\partial \zeta} = 0 \quad \text{at} \quad \zeta = 0 \quad \text{and} \quad 1$$

$$\frac{\partial^2 Z}{\partial \zeta^2} = 0 \quad \text{at} \quad \zeta = 0 \quad \text{and} \quad 1$$

If from these conditions the coefficients a, b, c, d, and e are determined, the function Z becomes

$$\left.\begin{aligned} Z &= e\zeta^3\left(\zeta^2 - 2.5\zeta + 5/3\right) \\ \text{so that} \qquad & \\ \frac{P_o}{P_{in}} &= 1 + eR(\bar{r})\zeta^3\left(\zeta^2 - 2.5\zeta + 5/3\right) \end{aligned}\right\} \tag{24a}$$

The function $R(\bar{r})$ will be determined as follows. By differentiation of equation (24a) with respect to $\bar{r}$, the enthalpy gradient is found to be

$$P_{in}^{-1}\frac{\partial P_o}{\partial \bar{r}} = e\frac{\partial R}{\partial \bar{r}}\zeta^3\left(\zeta^2 - 2.5\zeta + 5/3\right) \tag{24b}$$

The condition $\frac{\partial P_o}{\partial \bar{r}} = 0$ at $\zeta = 0$ is automatically satisfied.

The value of $R(\bar{r})$ in equation (24b) will now be determined from condition (c) of item (7) for $\frac{\partial P_o}{\partial \bar{r}}$ at $\zeta = 1$; namely,

$$\frac{\partial P_o}{\partial \bar{r}} = \left(v_o + \omega r_e \bar{r}\right)^2 \bar{r}^{-1}$$

It is important to note here that $\frac{\partial P_o}{\partial \bar{r}}$ at $\zeta = 1$ is a positive gradient because of the square on the right side (a fact necessary for the determination of the integration constants which appear below).

The value of v_o at $\zeta = 1$ was given before by equation (23a); namely,

$$v_o = -\omega \bar{r} r_e + A\bar{r}^{-1} \tag{23a}$$

Inserting this value of v_o into equation (c) of item (7) as given above and then equating the relation resulting for $\frac{\partial P_o}{\partial \bar{r}_o}$ to that given by equation (24b) (with $\zeta = 1$), then

$$\frac{\partial P_o}{\partial \bar{r}} = P_{in} \frac{e}{6} \frac{\partial R}{\partial \bar{r}} = A^2 \bar{r}^{-3} \tag{24c}$$

whence the value of R is

$$P_{in} eR = -3A^2 \bar{r}^{-2} + Be \tag{25}$$

with the integration constant B, which will be expressed in terms of the constant A, from the required average compression ratio.

The formula for P_o (see equations (24) and (25)) can now be written in the form

$$\frac{P_o}{P_{in}} = 1 - \left(3A^2 \bar{r}^{-2} - Be\right) \zeta^3 \left(\zeta^2 - 2.5\zeta + 5/3\right) P_{in}^{-1} \tag{26}$$

The formula developed for the radial velocity u_o can now be obtained after the functions $R(\bar{r})$ and $Z(\zeta)$ are explicitly replaced in equation (20) by equations (24a) and (25). If this is done, then equation (20) becomes

$$u_o = 12.5 \frac{r_e}{l} \bar{r}^{-1} w_{in} \zeta^2 (1 - \zeta)^2 \left[3A^2 \log_e \bar{r} + \frac{Be}{2}\left(1 - \bar{r}^2\right)\right] P_{in}^{-1} \tag{27}$$

Finally, it must be satisfied that at $\zeta = 1$ the average enthalpy ratio rise has the required value m^*. This condition can be satisfied by the available constants A and Be of equation (26) by integration of the enthalpy function across the annular cross section at $\zeta = 1$ (taken between the radii $\bar{r}_i$ and $\bar{r}_e = 1$), as shown below.

$$m^* \int_{\bar{r}_{i,ex}}^{1} 2\pi\bar{r}\, d\bar{r} = \int_{\bar{r}_{i,ex}}^{1} 2\pi\bar{r}\left(\frac{P_{o_{ex}}}{P_{in}}\right) d\bar{r} \tag{28}$$

where

$$\bar{r}_{i,ex} \equiv \frac{r_i}{r_e}$$

and where, from equation (26), for $\zeta = 1$,

$$\left(\frac{P_{o_{ex}}}{P_{in}}\right)_{\zeta=1} = 1 - \frac{1}{6}\left(3A^2\bar{r}_{ex}^{-2} - Be\right)P_{in}^{-1} \tag{26a}$$

After substitution of equation (26a) in equation (28) and integration over the exit cross section, the following relation is found between the constants Be and A:

$$Be = 6\,\frac{-A^2\log_e \bar{r}_{i,ex} + \left(1 - \bar{r}_{i,ex}^{\,2}\right)(1 - m^*)P_{in}}{1 - \bar{r}_{i,ex}^{\,2}} \tag{28a}$$

Replacing the constant Be in equation (26) by the value in equation (28a), one obtains the final form of the enthalpy function; namely,

$$\frac{P_o}{P_{in}} = 1 - \left\{3A^2\left[\bar{r}^{-2} + 2\,\frac{\log_e\left(\bar{r}_{i,ex}\right)}{1 - \left(\bar{r}_{i,ex}\right)^2}\right] - 6(1 - m^*)\right\}\zeta^3\left(\zeta^2 - 2.5 + 5/3\right)P_{in}^{-1} \tag{26b}$$

The Values of Force-Field Components

The formulas for the blade shapes expressed in equations (13a) and (13b) depend mainly on the components k_r, k_φ, and k_z of the force field. These components are given by the dynamic equations of flow equations (1a), (1b), and (1c), after the conditions of items (1) to (7) are taken into account in these equations. The values following from these conditions are given for u and its derivatives by equations (27) and (28a), for ϵ by equation (26b), and for v by the Bernoulli equation (22). It follows then that

$$k_r = w_{in} \frac{\partial u_o}{\partial z} - \frac{\left(v_o + \omega r\right)^2}{r} + P_{in} \frac{\partial \epsilon}{\partial r} \tag{29}$$

$$k_z = P_{in} \frac{\partial \epsilon}{\partial z} \tag{30}$$

$$k_\varphi = - \left[k_r\left(\frac{u_o}{v_o}\right) + k_z\left(\frac{w_o}{v_o}\right)\right] \tag{1d}$$

Torque and Power Calculation

The derivation of the relations needed to calculate the torque and power of the compressor for infinitesimal spacing is given in reference 1. This derivation may be repeated below in brief.

It is shown in reference 1 that the torque (or power) equation can be obtained by the use of the Bernoulli energy equation in the form

$$w_o \frac{d}{dz}\left(r_o v_{o,abs.}\right) = k_\varphi r_o \tag{31}$$

where

$$v_{o,abs.} = v_o + \omega r$$

and

$$r_o = f\left(r_{in}z\right) = \int \frac{u_o}{w_o}\,dz$$

$$\left(\frac{dr_o}{dz} = \frac{u_o}{w_o}\right)$$

Equation (31) represents the torque per unit of mass acting on a streamline element.

The mass of a volume element is given by

$$\rho_o(2\pi r\ dr\ dz) \tag{32}$$

Hence the differential torque acting on an element is given by

$$dM_o = \rho_o(2\pi r\ dr\ dz)k_\varphi r \tag{33}$$

or, by means of equation (31),

$$dM_o = \rho_o w_o(2\pi r\ dr\ dz)\ \frac{d}{dz}\left(rv_{o,abs.}\right) \tag{33a}$$

Since the flow is steady, the mass flow through any cross section per unit of time is constant. Hence equation (33a) becomes

$$dM_o = (\text{Constant})\ \frac{d}{dz}\left(rv_{o,abs.}\right)\ dz = 2\pi r_{in}\ dr_{in}\rho_{in}w_{in}\ \frac{d}{dz}\left(rv_{o,abs.}\right)\ dz \tag{33b}$$

so that the total torque M_o follows by integration from equation (33b); namely,

$$M_o = 2\pi\rho_{in}w_{in}\int_{r_{in,i}}^{r_{in,e}} r_{in}\ dr_{in}\int_{z=0}^{z=l} \frac{d}{dz}\left(rv_{o,abs.}\right)\ dz \tag{34}$$

or, explicitly,

$$M_o = \pi\rho_{in}w_{in}\left(r_{in,e}^2 - r_{in,i}^2\right)\left(rv_{o,abs.}\right)_{z=l} \tag{34a}$$

where in equation (34a) it is taken into account that $\left(v_{o,abs.}\right)_{z=0} = 0$, as previously prescribed. The value of $\left(v_{o,abs.}\right)$ at $z = l$, $(\zeta = 1)$, is derived by means of equation (23b) and is given in the form

$$\left(v_{o,abs.}\right)_{\zeta=1} = \left(v_o + \omega r\right)_{\zeta=1} = A\left(r/r_e\right)_{\zeta=1}^{-1}$$

Replacing $v_{o,abs.}$ in equation (34a) by its value given in equation (23b) and introducing nondimensional radii ratios $\bar{r} = r/r_e$ and $\bar{r}_{in} = r_{in}/r_e$ into equation (34a), one obtains the following relation for torque M_o and power:

$$\left.\begin{aligned} M_o &= \pi\rho_{in}w_{in}r_e^3\left(1 - \bar{r}_{in,i}^2\right)A \\ \text{Power} &= M_o\omega/550 \text{ hp} \end{aligned}\right\} \tag{34b}$$

It is observed from equation (34b) that the power is uniformly distributed across the exit section. Equation (34b) also shows that the torque, required to drive the compressor, depends upon three quantities, namely,

(a) The entering mass flow $\pi\rho_{in}w_{in}r_e^2\left(1 - r_{in,i}^2\right)$

(b) The shroud radius r_e (which is constant)

(c) The absolute rotational velocity $\left(v_{o,abs.}\right)_{z=l} = \left(v_o + \omega r\right)_{z=l}$ at the exit station, dependent by equation (23b) on the constant $A = \bar{r}(v_o + \omega r)_{\zeta=1}$.

Polytechnic Institute of Brooklyn
Brooklyn, N. Y., June 2, 1950

REFERENCES

1. Reissner, Hans: Blade Systems of Circular Arrangement in Steady Compressible Flow. Studies and Essays Presented to R. Courant on His Sixtieth Birthday, Interscience Pub., Inc. (New York), 1948, pp. 307-327.

2. Reissner, H. J.: On a Design Theory of Blade Systems in Steady Compressible Flow. Summary, Vol. 2, Pt. II. Proc. Seventh Int. Cong. Appl. Mech. (Sept. 1948, London), 1948, pp. 612-613.

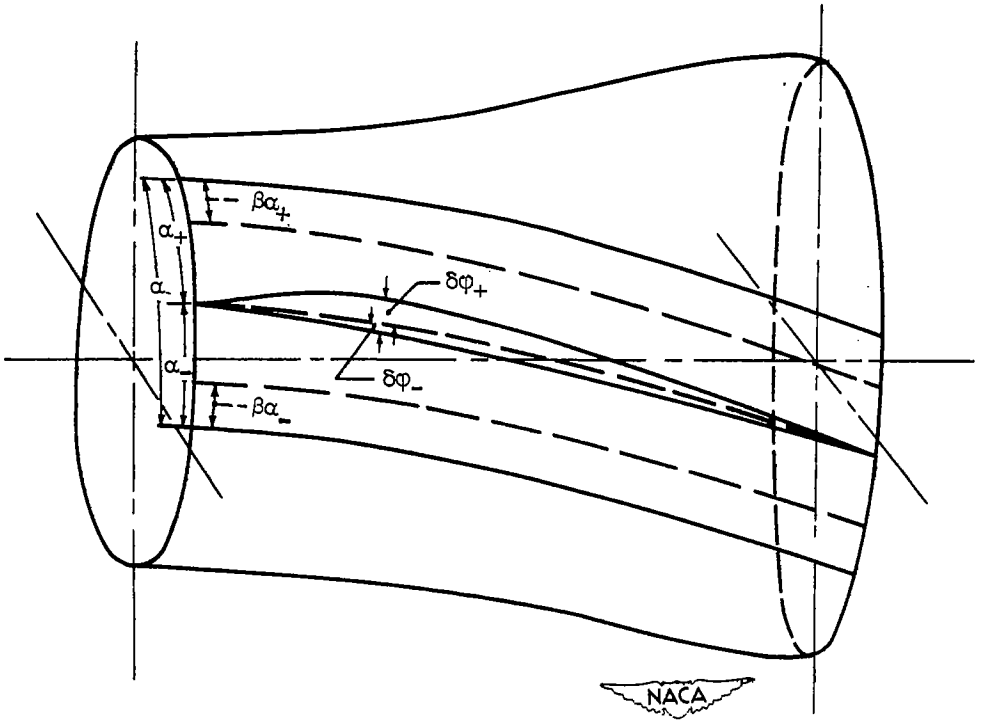

Figure 1.- General case.

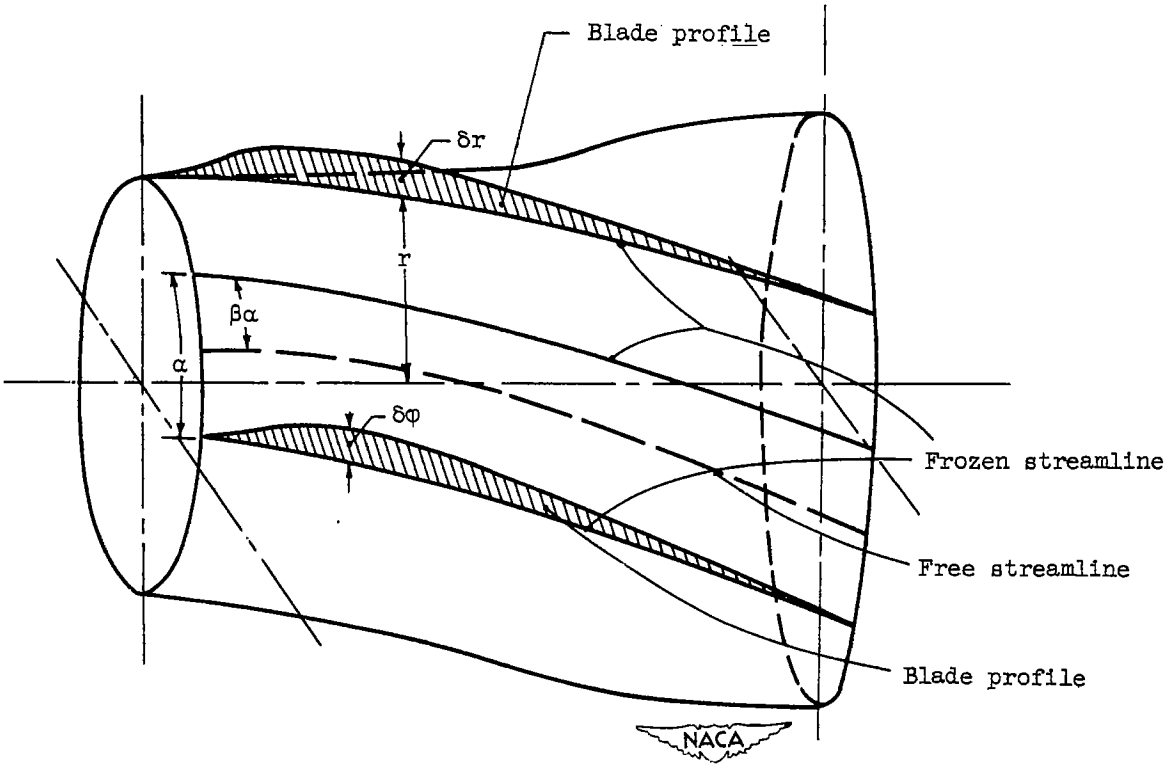

Figure 2.- Special case.

NACA-Langley - 10-30-51 - 1000