3918

NACA TN 2532

TECH LIBRARY KAFB, NM
0065475

NATIONAL ADVISORY COMMITTEE FOR AERONAUTICS

TECHNICAL NOTE 2532

X-RAY DIFFRACTION STUDY OF THE INTERNAL STRUCTURE OF SUPERCOOLED WATER

By Robert G. Dorsch and Bemrose Boyd

Lewis Flight Propulsion Laboratory
Cleveland, Ohio

Washington
October 1951

AFMDC
TECHNICAL LIBRARY
AFL 2811

TECH LIBRARY KAFB, NM
0065475

1.

NATIONAL ADVISORY COMMITTEE FOR AERONAUTICS

TECHNICAL NOTE 2532

X-RAY DIFFRACTION STUDY OF THE INTERNAL STRUCTURE OF SUPERCOOLED WATER

2245

By Robert G. Dorsch and Bemrose Boyd

SUMMARY

A Bragg X-ray spectrometer equipped with a volume-sensitive Geiger counter and Soller slits and employing filtered molybdenum $K\alpha$ radiation was used to obtain a set of diffracted intensity curves as a function of angle for supercooled water. Diffracted intensity curves in the temperature region of 21° to -16° C were obtained. The minimum between the two main diffraction peaks deepened continuously with lowering temperature, indicating a gradual change in the internal structure of the water. No discontinuity in this trend was noted at the melting point. The internal structure of supercooled water was concluded to become progressively more ice-like as the temperature is lowered.

INTRODUCTION

Recent investigations of the spontaneous freezing temperatures of supercooled water droplets within the size range of droplets found in the atmosphere in icing clouds indicate the possibility that two different mechanisms may initiate crystallization: (1) Heterogeneous nucleation (nucleation initiated by foreign material such as undissolved particles) appears to be predominant in the lesser supercooled temperature range and may explain the statistical dependence of the freezing temperature on droplet size indicated in laboratory experiments on droplets supported by a surface (references 1 and 2), (2) Laboratory investigations of droplet clouds and sublimation in the neighborhood of -38° to -42° C indicate a very high nucleation rate at these temperatures (references 3 to 5) which indicates the possibility of homogeneous nucleation by groups of atoms or molecules of water itself.

Several explanations of homogeneous nucleation which suggest that the internal structure of the supercooled water may be responsible for the formation of the homogeneous nucleus or embryo have been proposed

(references 6 and 7). The questions that are raised thereby are:

(1) Is the structure of supercooled water different from that of water above the melting point?

(2) Is there a variation of the structure of supercooled water with temperature?

(3) Is the structure of supercooled water more ice-like than that of water above the melting point?

2245

The crystal structure of ice has been studied by many investigators using X-ray diffraction techniques, and an accurate knowledge of the positions of the oxygen atoms in the lattice has been established (references 8 to 12). Because of weak coherent X-ray scattering by hydrogen atoms, the exact position of the hydrogen atoms in the crystal lattice was not known with comparable certainty. Recent neutron-diffraction studies of ice, however, have now located the position of the hydrogen centers with reasonable certainty (reference 13).

The diffraction of X-rays by liquid water at temperatures above 0° C, has also been thoroughly investigated (references 11 and 14 to 17). The general structure of water is now well known. Typical of most liquids, there is a lack of long range order of the atoms, but a short range order does exist. The structure of water is essentially tetrahedral, that is, each oxygen atom is tetrahedrally surrounded by four oxygen atoms with one hydrogen atom located on the center line of each pair of oxygen atoms. In ice this arrangement extends throughout the crystal, whereas in liquid water, where the molecules are not strongly bound but can readily move about, only an average local order exists. This condition was described in reference 17 by the term "broken-down ice structure", that is, each molecule is on the average bound tetrahedrally to approximately four neighboring molecules as in ice. These bonds are not permanent but are continually broken and reformed so that at any instant a molecule is bound to less than four neighboring molecules and has other neighbors at a continuous variety of distances. This "filling in" accounts for the greater density of water. There is good qualitative agreement among the many investigators that this internal arrangement or degree of order is temperature dependent; that is, as the temperature of water is lowered the structure appears to become more ice-like. As early as 1933, Bernal and Fowler (reference 11) classified the structure of water below 4° C as ice-tridymite like. It was suggested "this arrangement might be expected to be common in supercooled water".

Inasmuch as experimental X-ray diffraction data on supercooled water were not available, an experiment to extend the data into the supercooled region was undertaken at the NACA Lewis laboratory as a

part of an investigation of the fundamental properties of supercooled water droplets found in icing clouds.

Because supercooled water probably cannot be circulated in a system employing a jet (references 15 to 17) without crystallizing and because the probability of accidental seeding (such as by a frost particle from above the air-water interface) increases with time, a method must be used which combines a suitable support for the liquid and high X-ray intensity to reduce exposure time. The method chosen for this investigation is essentially that used in the pioneer investigations of liquids by Stewart and Morrow (reference 18) with the ionization chamber replaced by a volume-sensitive Geiger counter.

2245

APPARATUS AND PROCEDURE

A Bragg X-ray spectrometer equipped with a Geiger counter and Soller slits was employed using filtered molybdenum $K\alpha$ radiation (figs. 1 and 2). A zirconium oxide filter was used at the Geiger tube entrance. Each Soller slit system consisted of nine channels 0.017 inch wide by 0.365 inch high with lead spacers 0.005 inch thick. A Soller slit $1\frac{3}{8}$ inches long was mounted between the X-ray tube and the sample and a similar one $2\frac{1}{2}$ inches long was mounted between the sample and the Geiger counter. The X-ray tube current was held constant by an external current controller that automatically adjusted the filament current to compensate for any changes in tube current.

The water sample (1 to 2 cc) was in a cylindrical glass tube (0.66-cm diam) which was blown with a thin-walled central section for the transmission of the radiation. The greater wall thickness at top and bottom facilitated mounting and reduced breakage. The sample was rotated at 10 rpm by a synchronous motor to reduce the effect of irregularities that might be present in the glass tube. The temperature of the sample was measured by an iron-constantan thermocouple encased in a 1/16-inch diameter stainless steel tube placed just above the region exposed to the X-ray beam and was recorded by a self-balancing potentiometer. The thermocouple tube also acted as a gentle stirrer. A double-walled container with entrance and exit slots for the X-ray beam was filled with a low-temperature mixture of alcohol, water, and dry ice and placed around the water sample, which was thereby cooled by radiation. The bath was kept at the proper slush point by adding dry ice. In addition to the simplicity of this method, there were several desirable features: (1) the rate of cooling was low, which was an advantage when supercooling samples of this size, (2) the entire sample tube, except at beam entrance and exit openings, was surrounded by a constant temperature wall, and (3) the bath walls were colder than the sample, which kept the glass tube free of moisture and frost

deposits on the outer surface since the frost formed on the metal sleeve rather than on the glass sample tube. Because the sample tube was rotated, the rather large, recessed X-ray exit opening in the bath walls for the scattered radiation did not produce prohibitive temperature inhomogeneities. The temperature was readily held to the desired value within $\pm 0.5^{\circ}$ C and in some runs within $\pm 0.2^{\circ}$ C. All water used in the experiment was triple distilled. Specimens of this purity were readily supercooled to -8° C and usually could be held at temperatures in this range for 4 to 6 hours without difficulty although occasional specimens crystallized much sooner, probably because of ice crystals falling into the water from regions above the air-water interface. Difficulty was encountered, however, in keeping samples at temperatures below -8° C by this method for a sufficiently long period to permit obtaining a complete diffraction picture of the region of interest. A single complete run (approximately 3 hrs) was obtained with the sample at -16° C using a freshly blown tube and the triple-distilled water.

2245

Data runs were made by obtaining the number of counts in a 1-minute interval at each goniometer setting. Readings were taken at $1/4^{\circ}$ intervals in the region containing the two main diffraction peaks, 11° to 21°, and at $1/2^{\circ}$ or 1° intervals for the rest of the region from 0° to 90°. The 1-minute counting period was a compromise between the desirability of short data run times from the standpoint of avoiding accidental crystallization and the need for long counting times for counter statistical accuracy. Inasmuch as the counting rates within the angular region of interest were between 450 and 2500 counts per minute, the counting losses due to the recovery time of the counter were small and therefore were neglected. In order to obtain reasonable statistical accuracy, several runs (8 to 15) were made at each temperature and the final curves presented represent average values. Successive runs were made in opposite angular directions to minimize the effect of any time dependent changes in intensity of the X-ray source.

Several corrections to the curves of diffracted intensity as a function of angle were necessary. The first correction eliminated the effect of scattering by the glass tube. For this purpose a diffuse diffracted intensity curve (average of several runs) for the empty glass tube was obtained and corrected for absorption by the water sample (reference 19). This corrected glass-diffracted intensity curve was then subtracted from the curve obtained for the water and glass. The diffracted intensity curve was then corrected for self-absorption by the supercooled water sample (reference 20). Finally, the diffracted intensity curve was corrected for the reduction in measured intensity due to polarization (reference 20).

RESULTS AND DISCUSSION

The average diffracted intensity curves, ranging from 21° to -8° C, corrected for absorption, polarization, and scattering by the glass container, are shown in figure 3. A diffracted intensity curve for a single data run at -16° C is indicated in the same figure by a dashed line; in addition, the positions and relative intensities of the two most intense diffraction peaks for ice (reference 8) are shown. The curves at 21° and 4° C were obtained for direct comparison with the supercooled data and are in good agreement with previously published data in this temperature region although the resolution of the two prominent peaks is somewhat inferior. This sacrifice in resolving power was necessary in order to keep the time required for the supercooled data runs to a minimum and thus reduce the probability of accidental crystallization of the water sample.

2245

There are three interesting features of this set of diffracted intensity curves (fig. 3): (1) The most prominent peak shows a small but continuous shift toward smaller scattering angles, as the temperature is lowered. The peak shifts from 13° 15' at 21° C to 12° 40' at -8° C. (2) The second diffraction peak shows no tendency to shift angular position with temperature but remains at a scattering angle of approximately 18° 20' throughout the temperature range investigated. (3) The most striking feature of the set of diffracted intensity curves is the gradual deepening of the minimum between the two main peaks as the temperature is lowered into the supercooled range; that is, the second peak becomes more sharply resolved. This is a continuation of the trend found by other investigators at temperatures above the melting point and is an indication that the internal structure of the water is apparently changing in a gradual and continuous manner as the degree of supercooling is increased. No discontinuity in this trend occurs at the melting point. Analysis of diffraction curves above the melting point by previous investigators (references 11 and 17) indicate that the increase in resolution of this second peak as the temperature is lowered is due to a more ice-like internal structure of the water sample. Therefore, a reasonable conclusion that can be drawn, for the temperature range investigated, is that the supercooled water is becoming progressively more ice-like in structure as the temperature is lowered. This trend is consistent with the density change with temperature of supercooled water reported in reference 21 and shown in figure 4. The density of water decreases throughout the supercooled range indicated in the figure. This decrease could only be explained by a gradual change in the internal arrangement of the water molecules toward a less closely packed structure.

CALCULATION OF SPONTANEOUS FREEZING TEMPERATURE FROM DIFFRACTION DATA

Various theories of the mechanism of the initiation of crystallization of supercooled water by homogeneous nucleation involve assumptions that the internal structure of supercooled water becomes locally more ordered, or more ice-like, as the temperature is lowered; that is, groups of molecules form ordered aggregates or microcrystals which can act as freezing nuclei. Whether or not these aggregates can initiate crystallization depends on their structure, their effective size, and the temperature of the supercooled water. Inasmuch as the X-ray diffraction data of this report indicate that the internal structure of supercooled water apparently becomes progressively more ice-like as the temperature is lowered, qualitative support is lent to the suggestions appearing in the literature (for example reference 7) that the spontaneous freezing temperature can be calculated theoretically from the Thomson equation presented in reference 22. The temperature T_r, at which an isomorphic particle of equivalent radius r can initiate freezing, as given by the Thomson relation is 2245

$$\frac{T_M - T_r}{T_M} = \frac{2\sigma M}{rQ\rho}$$

where

T_M melting point of substance (273° K for water)

σ interfacial surface energy between liquid and solid (computed by an approximate relation suggested by Volmer in reference 22, p. 181, to be 10.5 ergs/cm^2 for water)

M molecular weight (18 for water)

Q molecular heat of fusion (1440 cal/mole = 6.03×10^{10} ergs/mole for water)

ρ density of solid phase (0.92 g/cm^3 for water)

In ice, each molecule is surrounded by four other molecules at a radial distance of 2.76 A with a second set of neighbors at a radial distance of 4.51 A. In reference 7, the radius of this second sphere of coordination for ice is assumed to be the effective radius of the homogeneous nucleus and the spontaneous freezing temperature of supercooled water is calculated from the Thomson equation to be:

$$T_r - T_M \cong -41^\circ \text{ C}$$

This calculated spontaneous freezing temperature agrees well with the experimental results of references 3 and 4.

2245

In order for the Thomson equation to be valid, the particle acting as nucleus must be truly isomorphic because no term that takes into account the work of nucleus formation is included. If it is assumed that the microcrystals present in supercooled water have a lattice structure identical with that of ice at the spontaneous freezing temperature, these microcrystals are truly isomorphic nuclei and the equation can be applied directly. This calculation therefore depends on the assumption that the 4.51 A sphere of coordination found in the ice lattice is also present in supercooled water. In reference 17, the radial distribution curves calculated for molecules about a given molecule for water at 1.5° C show a marked concentration of neighbors at a distance of about 4.5 A. Thus, if ice-like microcrystals of about 4.5 A radius were present in supercooled water at approximately -41° C, they would initiate crystallization at this temperature as no work of nucleus formation would be needed and their radius would be of sufficient size to permit growth.

The X-ray diffraction data of this report lend qualitative support to the theory of nucleation presented; however, too much reliance cannot be placed on a calculation of this type for the following reasons:

(1) There is still a question as to whether freezing of water droplets or direct sublimation occurs in clouds at temperatures in the region from -38° to -42° C

(2) Heterogeneous nucleation (such as that due to ions from dissolved salts, reference 23) may be active even in this temperature region (see reference 5)

(3) In reference 24 it is reported that water has been supercooled to -72° C (although as yet not duplicated by others)

(4) The liquid-solid interfacial surface energy is not known precisely

(5) The X-ray diffraction data of this report extend only as low as -16° C.

SUMMARY OF RESULTS

Diffracted intensity curves using filtered molybdenum $K\alpha$

radiation representing the average of several runs were obtained in the temperature range 21° to -8° C. A diffracted intensity curve for a single run at -16° C was also obtained. The important features of the set of diffracted intensity curves are: (1) the most prominent peak shifted from a scattering angle of 13° 15' at 21° C to 12° 40' at -8° C, (2) the second diffraction peak remained at an approximately fixed angle of 18° 20' throughout the temperature range investigated, (3) the minimum between the two main peaks deepened continuously as the temperature was lowered, resulting in better resolution of the two peaks as the temperature was lowered.

2245

It is concluded that the changes in the diffracted intensity curves are an indication of changes in the internal structure of the supercooled water, which apparently becomes progressively more ice-like in structure as the temperature is lowered.

Lewis Flight Propulsion Laboratory
National Advisory Committee for Aeronautics
Cleveland, Ohio, June 29, 1951

REFERENCES

1. Dorsch, Robert G., and Hacker, Paul T.: Photomicrographic Investigation of Spontaneous Freezing Temperatures of Supercooled Water Droplets. NACA TN 2142, 1950.

2. Levine, Joseph: Statistical Explanation of Spontaneous Freezing of Water Droplets. NACA TN 2234, 1950.

3. Schaefer, Vincent J.: The Production of Clouds Containing Supercooled Water Droplets or Ice Crystals Under Laboratory Conditions. Bull. Am. Meteorological Soc., vol. 29, no. 4, April 1948, pp. 175-182.

4. Cwilong, B. M.: Sublimation in a Wilson Chamber. Proc. Royal Soc. (London), ser. A, vol. 190, no. A1020, June 17, 1947, pp. 137-143.

5. Fournier D'Albe, E. M.: Some Experiments on the Condensation of Water Vapor at Temperatures Below 0° C. Quarterly Jour. Royal Meteorological Soc., vol. 75, no. 323, Jan. 1949, pp. 1-14.

6. Yoshida, Usaburo: The Phenomena of Crystallization and Melting, and the Internal Structure of Liquid of a Simple Substance. Memoirs of the College of Science, Kyoto Imperial Univ., ser. A, vol. XXIII, no. 4, March 1941, pp. 207-224.

7. Lafargue, M. Camille: Sur la Congélation des gouttelettes d'eau vers -41° C. Comptes Rendus, T. 230, No. 23, June 5, 1950, P. 2022-2024.

8. Dennison, D. M.: The Crystal Structure of Ice. Phys. Rev., 2nd ser., vol. XVII, no. 1, Jan. 1921, pp. 20-22.

9. Barnes, William Howard: The Crystal Structure of Ice Between 0° C and -183° C. Proc. Roy. Soc. (London), ser. a, vol. 125, no. 799, Nov. 1, 1929, pp. 670-693.

10. Bragg, W. H.: The Crystal Structure of Ice. Proc. Phys. Soc. (London), vol. XXXIV, Jan. 7, 1922, pp. 98-103.

11. Bernal, J. D., and Fowler, R. H.: A Theory of Water and Ionic Solution, with Particular Reference to Hydrogen and Hydroxyl Ions. Jour. Chem. Phys., vol. 1, no. 8, August 1933, pp. 515-548.

12. Pauling, Linus: The Structure and Entropy of Ice and of Other Crystals with Some Randomness of Atomic Arrangement. Jour. Am. Chem. Soc., vol. 57, no. 12, Dec. 27, 1935, pp. 2680-2684.

13. Wollan, E. O., Davidson, W. L., and Schull, C. G.: Neutron Diffraction Study of the Structure of Ice. Phys. Rev., vol. 75, no. 9, May 1, 1949, pp. 1348-1352.

14. Stewart, G. W.: X-Ray Diffraction in Water: The Nature of Molecular Association. Phys. Rev., vol. 37, no. 1, 2d ser., Jan. 1, 1931, pp. 9-16.

15. Meyer, Hans Heinrich: Über den Einfluss der Temperatur und gelöster Elektrolyte auf das monochromatische Debye-Scherrer-Diagram des Wassers. Annalen der Physik. Folge 5, Bd. 5, Juli 7, 1930, S. 701-734.

16. Katzoff, S.: X-Ray Studies of the Molecular Arrangement in Liquids. Jour. Chem. Phys., vol. 2, no. 12, Dec. 1934, pp. 841-851.

17. Morgan, J., and Warren, B. E.: X-Ray Analysis of the Structure of Water. Jour. Chem. Phys., vol. 6, no. 11, Nov. 1938, pp. 666-673.

18. Stewart, G. W., and Morrow, Roger M.: X-Ray Diffraction in Liquids: Primary Normal Alcohols. Phys. Rev., vol. 30, no. 3, 2d ser., Sept. 1927, pp. 232-244.

19. Ritter, H. L., Harris, R. L., and Wood, R. E.: On the X-Ray Absorption Correction for Encased Diffractors in the Debye-Scherrer Technique. Jour. Appl. Phys., vol. 22, no. 2, Feb. 1951, pp. 169-176.

20. Blake, F. C.: On the Factors Affecting the Reflection Intensities by the Several Methods of X-Ray Analysis of Crystal Structures. Rev. of Modern Phys., vol. 5, no. 3, July 1933, pp. 169-202.

21. Mohler, John Fred: The Expansion of Water Below Zero Degree Centigrade. Phys. Rev., vol. XXXV, no. 3, Sept. 1912, pp. 236-238.

22. Volmer, Max: Kinetek der Phasenbildung. Theodor Steinkopff (Dresden und Leipzig), 1939.

23. Mason, B. J.: The nature of ice-forming nuclei in the atmosphere. Quart. Jour. Roy. Meteorological Soc., vol. 76, no. 327, Jan. 1950, pp. 59-74.

24. Frank, F. C.: Molecular Structure of Deeply Super-cooled Water. Nature, vol. 157, no. 3983, March 2, 1946, p. 267.

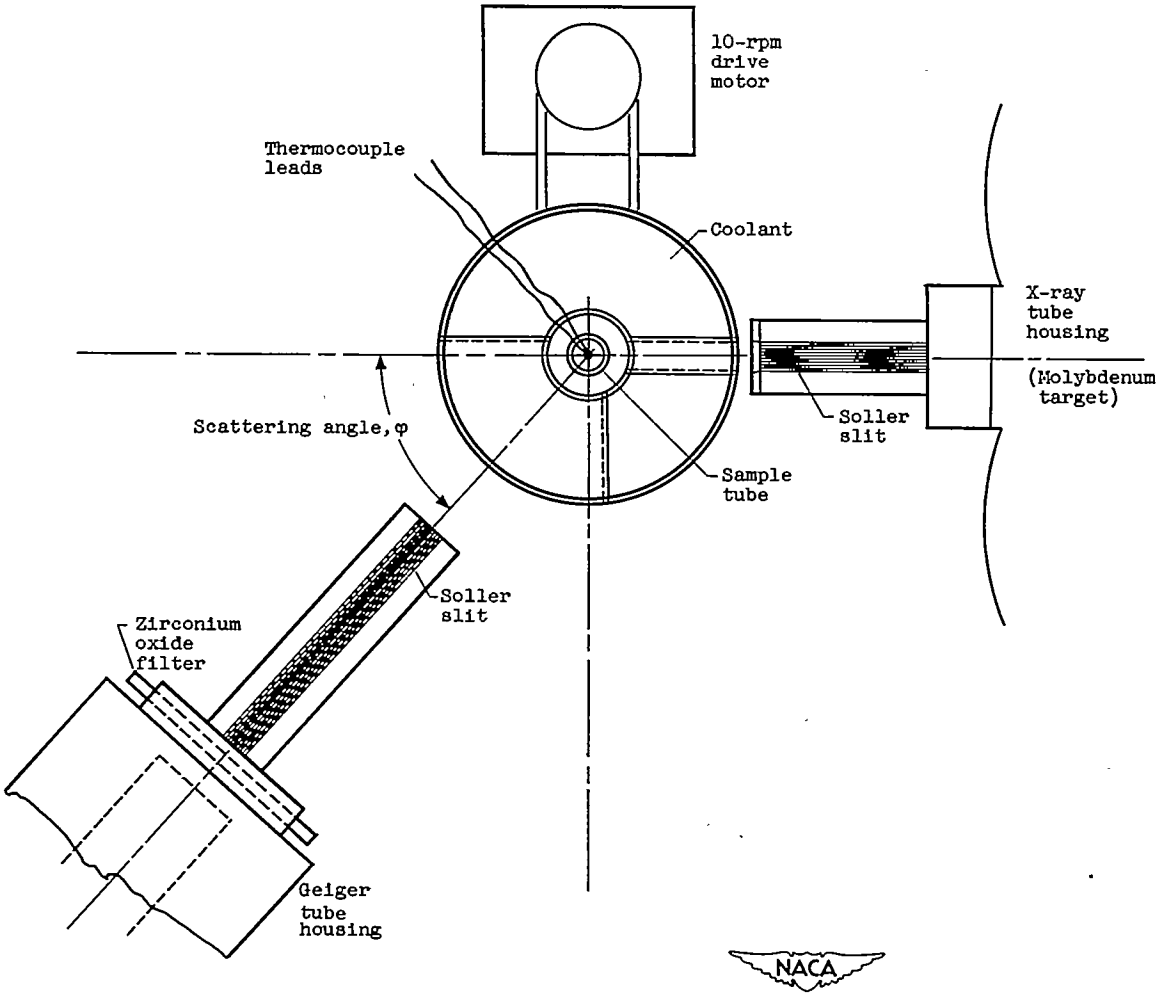

Figure 1. - Schematic diagram of diffraction apparatus.

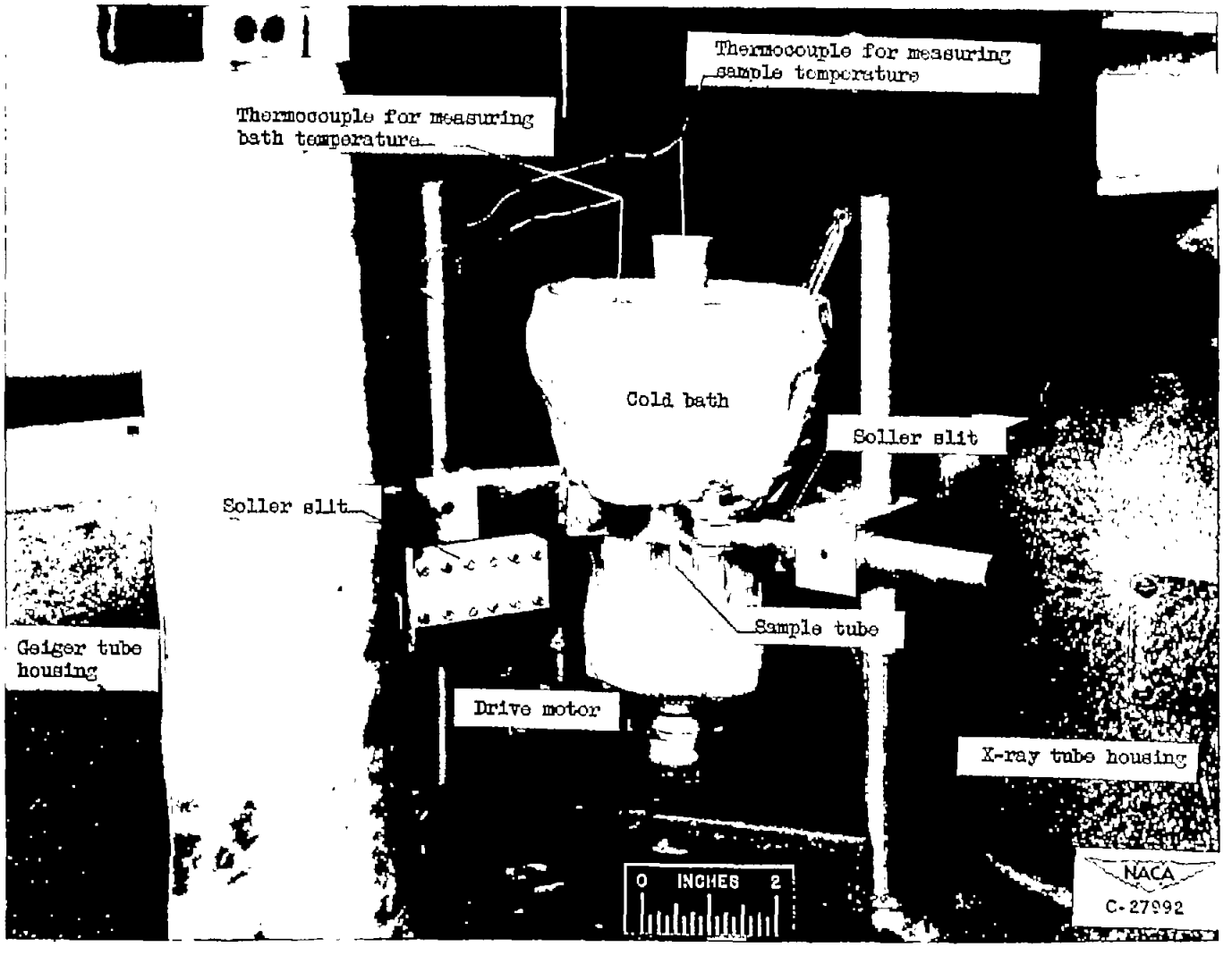

Figure 2. - Bath and slit arrangement.

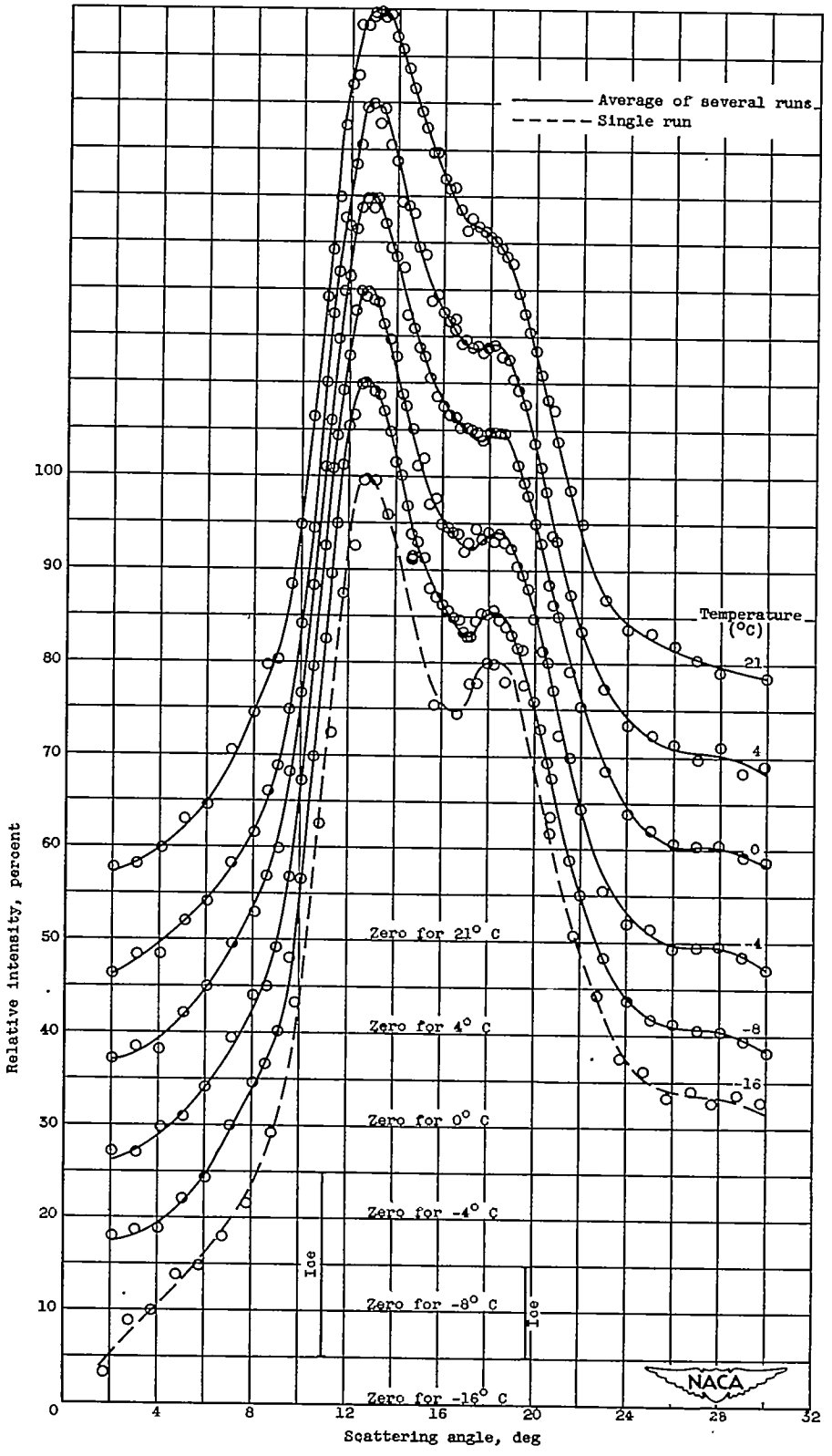

Figure 3. - Diffracted intensity curves of water and supercooled water between 21° and -16° C corrected for absorption and polarization; wavelength approximately 0.71 angstroms.

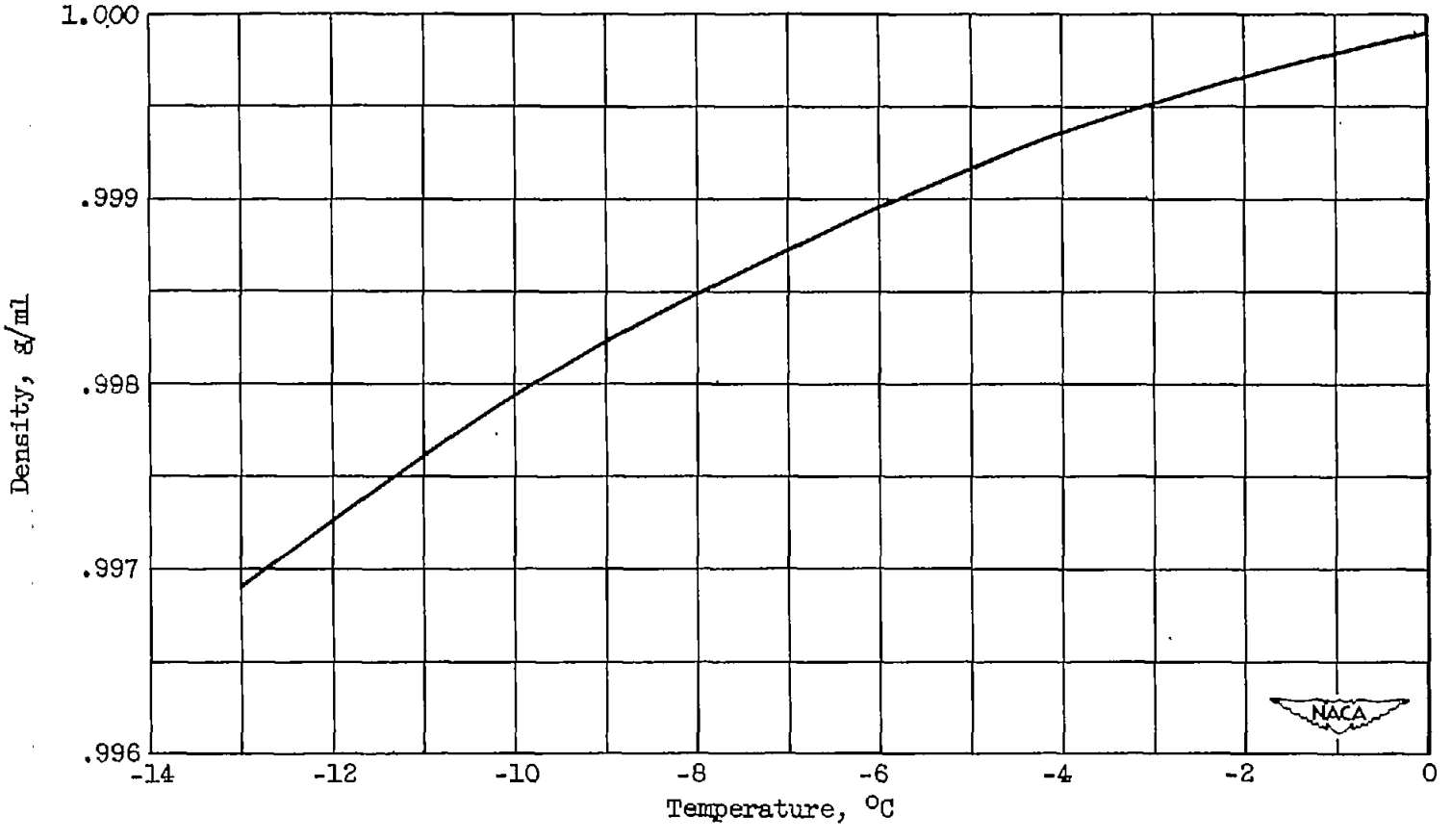

Figure 4. - Density of supercooled water. (Data from reference 21.)