8931
NACA TN 2545

TECH LIBRARY KAFB, NM
0065489

NATIONAL ADVISORY COMMITTEE FOR AERONAUTICS

TECHNICAL NOTE 2545

DISCREPANCIES BETWEEN THEORETICAL AND OBSERVED BEHAVIOR OF CYCLICALLY LOADED BEARINGS

By R. W. Dayton, E. M. Simons, and F. A. Fend

Battelle Memorial Institute

Washington
November 1951

AFMC
TECHNICAL LIBRARY
AFL 2811

TECH LIBRARY KAFB, NM

0065489

NATIONAL ADVISORY COMMITTEE FOR AERONAUTICS

TECHNICAL NOTE 2545

DISCREPANCIES BETWEEN THEORETICAL AND OBSERVED BEHAVIOR OF CYCLICALLY LOADED BEARINGS

By R. W. Dayton, E. M. Simons, and F. A. Fend

SUMMARY

Discrepancies between theory and the experimental behavior of a cyclically loaded shaft rotating in a sleeve bearing are analyzed. For constant loads rotating at one-half the frequency of shaft rotation, eccentricity ratios were found to be unity when kerosene was used to lubricate the test bearing. This agrees with theoretical predictions. However, when SAE 10 oil was used, the eccentricity ratios were reduced. Under the latter conditions, the eccentricity ratio decreased as the shaft speed increased. Refinements of the test conditions resulted in observed eccentricity ratios which were closer to the theoretically predicted value of unity.

INTRODUCTION

In reference 1 the effects of various loading conditions on the movements of a shaft rotating in a sleeve bearing were described. In the main, theoretical predictions were verified by this work. Under steady loads, both the predicted eccentricity ratios and the expected rupture of the oil film were observed. For rotating or alternating loads, measurements were made of the variation of eccentricity ratio with respect to N_p/N_j, the ratio of load speed to shaft speed. As predicted by theory, in the vicinity of $N_p/N_j = 1/2$, the eccentricity ratio rose sharply. However, it failed to reach the theoretical value of unity at the crest.

This observation aroused considerable interest and another investigation was authorized to examine the causes for the discrepancy. The eccentricity measurements at a one-half frequency ratio were repeated at extremely low Sommerfeld numbers. Even in this range, they were found to agree with theory only at the lowest speeds used. At higher shaft speeds, the observed eccentricity ratios decreased with increasing speed.

The objective of the present investigation was the completion of the study of the causes of this unexpected behavior. It was decided to evaluate the effects of the various deviations from ideal test conditions and, wherever possible, to eliminate them. This approach was designed to determine how the various factors influenced the behavior of the bearing.

This work was conducted at the Battelle Memorial Institute under the sponsorship and with the financial assistance of the National Advisory Committee for Aeronautics.

SYMBOLS

The symbols used in the discussions throughout the text are defined as follows:

c	radial clearance, or difference in radii of bearing and journal
e	distance between center of journal and center of bearing, called eccentricity
r	radius of journal or of bearing
w	axial width of bearing
F	external load applied to bearing
N_j	average rotational frequency of journal in revolutions per unit time
N_p	average rotational frequency of load in revolutions per unit time
P	load per unit projected area of bearing $\left(F/2rw\right)$
S	Sommerfeld number $\left(\left(\frac{r}{c}\right)^2 \frac{\mu N_j}{P}\right)$
η	eccentricity ratio $\left(e/c\right)$
μ	absolute viscosity of lubricant

APPARATUS

Capacitive Micrometer

A capacitive micrometer is used to reveal the instantaneous position of the shaft center and, thereby, the condition of the lubrication. In this device, the position of the oscilloscope spot represents the location of the center of the test shaft. Movements of the shaft in the bearing are reproduced, greatly magnified, by motions of the spot on the screen of the oscilloscope. By responding to variations in the small air gaps between the steel shaft and the fixed reference probes, the micrometer measures shaft position without mechanically contacting the shaft or being influenced by minor surface irregularities.

At the beginning of this phase of the work, it was found that the micrometer was not functioning properly. In the course of the work on the micrometer, the simplified circuit shown in figure 1 was built. While retaining the advantages of the former circuit, the modified micrometer was found to have improved stability and ease of operation and was, therefore, used in further experiments.

Inasmuch as a variation of the micrometer response with frequency would be particularly misleading in the present work, the micrometer was designed to have a constant response for all frequencies below 50,000 cycles per second. Its frequency response was checked by several tests[1] and was found to be constant for all frequencies less than 1000 cycles per second, which was the maximum tested. Since the maximum speed of the test shaft was no more than 20 cycles per second, it is doubtful whether the movements of the shaft center could have frequency components in excess of 1000 cycles per second. Therefore, the micrometer was judged to have adequate frequency response.

Bearing-Testing Machine

The testing machine used on this project was that constructed for previous studies at Battelle and is completely described in reference 1.

---

[1]One such test consisted of rotating a brass bar so that its tip passed the micrometer probe. Sensing this approach in the same manner that it detects the approach of the test shaft, the micrometer produces a pip on the oscilloscope screen. Varying the speed of rotation of this brass bar from 5000 rpm down to rest produced no change in the response of the micrometer, as judged by the height of the pip. Considering the period during which the bar is in front of the probe, the response of the micrometer can be shown to be constant for frequencies below 1000 cps.

The machine uses a steel shaft, 4 inches in diameter, which is supported between a steel-backed, silver-plated test bearing and a non-whirling, pivoted-shoe support bearing. The diametral clearance is approximately 0.004 inch. The loading mechanism can provide a steady load, a unidirectional sinusoidal load, a rotating constant load, or combinations thereof. Load magnitudes can be varied from 0 to 55 pounds per square inch of projected area. The shaft speed can be varied over a range by interchanging pulleys. The ratio of the frequency of load application to shaft speed can be varied over a wide range by the use of change gears.

As a part of this study, a number of modifications were made in the testing machine. These changes, together with their effects on the behavior of the bearing, are described in a later section.

TEST PROCEDURE

This work involves the determination of the influence of various factors on eccentricity ratio. The accuracy of measurements of eccentricity ratios depends upon the method by which a clearance orbit is obtained. The clearance orbit is the path followed by the center of the shaft as it moves around its maximum orbit, rubbing directly on the surface of the bearing. Except in cases in which the bearings are misalined, this orbit will be a circle.

To obtain clearance orbits on the oscilloscope screen, a 100- or 200-pound load was applied through the rotating-load mechanism which was turned slowly by hand. Frequent pauses were made to permit the applied load to squeeze out whatever oil film might have been built up. The clearance orbit shown in figure 2 illustrates the result of this procedure. It will be observed that at none of the pauses (photographically represented by a thickening of the trace) does the shaft center move outward. Such an outward movement would indicate that an oil film had built up and was being squeezed out while the shaft was stationary. This did not occur, even when the pauses were as long as 30 seconds. In addition, loads up to 350 pounds have been used to test the consistency of the results. Under all of the conditions, the clearance orbits have been substantially the same. Thus, it seems likely that only a very thin boundary layer of oil, if any, can be present under these circumstances.

The orbits are recorded photographically and, for measurement, are projected on a screen, giving a greatly magnified image. Comparison of

the orbit diameter with the diameter of the clearance orbit yields the eccentricity ratio. The accuracy by which this can be obtained is believed to be within ±4 percent.

Oil temperatures are measured by a thermocouple which is inserted in a hole bored in the housing and spot-welded to the back of the test bearing. While it is realized that the temperatures so obtained will be below the temperature of the oil film, it is believed that the error is not large. The slope of the graph of eccentricity ratio against Sommerfeld number is generally quite low, so that a considerable error in the viscosity value would have little effect on the curve.

COMPARISON OF TEST CONDITIONS WITH CONDITIONS ASSUMED BY THEORY

In the mathematical treatments (references 2 to 7) of the load-carrying capacity of a cyclically loaded journal bearing, a number of simplifying assumptions are commonly made. Reynolds' equation, which is the starting point of most of these discussions, assumes the following:

(1) Newton's definition of viscosity holds for the lubricant; that is, the shear stress is proportional to the rate of shear

(2) Only laminar flow is present

(3) Effects of curvature may be neglected

(4) No slippage occurs at the boundaries of the lubricating film

(5) The lubricant is incompressible

(6) The inertia and gravitational terms are negligible

(7) The tangential velocity of the oil varies only in the radial direction

(8) The velocity of the lubricant has no component across the thickness of the oil film

(9) There is no axial flow in the lubricating-oil film

(10) The oil film has a uniform density and viscosity throughout its entire volume (i.e., it contains no air bubbles or variations owing to temperature or pressure changes)

In the application of Reynolds' work to describe the behavior of a shaft in a journal bearing, the additional assumptions commonly made are:

(11) The shaft is driven by a constant torque

(12) The only force acting on the shaft is the intentionally applied load

(13) The lubricating-oil film is continuous

The testing machine used in this work can, like any experimental apparatus, only approximate these ideal conditions. Figure 3 illustrates the following possible sources of deviation from the above theoretical assumptions:

Additional mechanical loads imposed on the test shaft:

(1) Static loads introduced by the misalinement of the test-bearing housing with respect to the support-bearing housing

(2) Dynamic loads imposed by relative motions of the two housings

(3) Extraneous loads introduced through the loading bearings

(4) Loads introduced through the drive coupling

(5) Load introduced by pull of the chain driving the cam shaft

(6) Nonuniform rotation of the test shaft

(7) Loads imposed by incorrect balancing of the weight of the test shaft by the compensating spring

(8) Centrifugal forces caused by the whirling of the test shaft

(9) Gyroscopic forces on the test shaft

(10) Stiffening effect of the pivoted-pad support bearing

Hydrodynamic effects:

(11) Air bubbles in oil film

(12) Effect of side leakage of lubricating film

(13) Turbulence in the oil film

(14) Rupture of lubricating-oil film

(15) Variation of viscosity caused by pressure differences within the lubricating film

Temperature effects:

(16) Variation of the clearance space with temperature changes

(17) Dimensional changes of the micrometer probes caused by temperature changes

(18) Variations in the viscosity of the lubricating film caused by temperature variations

EFFECT OF NONIDEAL TEST CONDITIONS ON LOAD-CARRYING CAPACITY OF TEST BEARING

As measured by eccentricity ratio, the load-carrying capacity will be affected to a greater or lesser extent by each of the deviations discussed in the previous section. In order to gage their importance, each has been examined by experimental or theoretical means wherever possible. Most of these deviations have been accounted for either by modifying the test machine or by showing them to be negligible. Those that were not amenable to a quantitative analysis have been examined qualitatively.

Changes Made in the Test Machine

A number of modifications were made in the test apparatus in order either to eliminate the extraneous effects or to evaluate their importance. In each case where a measurable difference was found, the elimination of the extraneous forces improved the fit of the experimental results with theory. Since the effects of these changes are interesting in their own right, they will be reported here.

The misalinement of the test bearing with respect to the support bearing was varied by means of the turnbuckles, visible in figure 4. These force the bearing housings either together or apart at their upper ends, so that they deflect as cantilevers about their support at the machine bed. Since these two bearings were originally precision-bored in place, this is the only action necessary to restore alinement. As

the bearings are forced severely out of alinement, the geometry reduces the clearance space available to the shaft in the horizontal direction, and, to a much greater degree, in the vertical direction. This action is clearly demonstrated by the football-shaped clearance orbit shown in figure 5(a), for a highly misalined condition. When the shaft is rotated in a clearance space of this shape, the size of its orbit is reduced, and the eccentricity ratio in the vertical direction is increased. Since the journal-center path tends to remain circular under a constant rotating load, the eccentricity ratio in the horizontal direction decreases in this process. These effects are evident, in figure 5(a), from the small separation between the spindle orbit and the clearance orbit in the vertical direction and the large separation in the horizontal direction. When the alinement is improved, as in figure 5(b), the clearance orbit becomes more circular, and the spindle-center path is concentric with it.

The above effects are shown graphically in figure 6. Here, the alinement of the bearing housings is represented by the readings on the dial indicators illustrated in the photograph of the test apparatus, figure 4. These readings indicate the displacements of the bearing housings with respect to each other. The zero setting indicates the normal position, in which no force is applied by the turnbuckles.

The foregoing discussion explains the decrease in vertical eccentricity ratios as the alinement is improved. It does not explain the crest near the center of the curve for the vertical eccentricity ratio in figure 6. As mentioned in a previous report (reference 1), this may be traced to centering forces resulting from small misalinements.

Consider a shaft which is misalined with respect to the bearing axis. At one point, the shaft center will be closest to the center of the bearing. Elsewhere, the shaft will be more eccentric, and at each such point it will experience an extra force caused by additional pressures developed in the lubricating-oil film. Since these forces will always act inward, there will be a net centering force, which will prevent the shaft from rubbing on the bearing. As the alinement is improved, the net centering force is correspondingly decreased, permitting the eccentricity ratio to increase. Thus, exact alinement would be judged by the maximum point on the central hump in the upper curve of figure 6. Another criterion for perfect alinement stems from symmetry considerations. The eccentricity ratios along the major and the minor axes should become equal when the bearings are in alinement.[2] As may be seen in figure 6, the results of the two methods for judging the point

[2]This point is taken to be at a displacement of 0.002 inch (fig. 6). The curves in figure 6 were obtained from experimental curves for orbit diameter and clearance-circle diameter. They are not considered to be sufficiently accurate for their crossing-over to be significant.

at which the bearings are in line do not agree exactly. Since these points are close together and correspond to practically the same eccentricity ratio, the discrepancy is not significant.

Thus far, only the effects of the static misalinement of the bearing housings have been discussed. While making the above measurements, a small oscillation of the housings along the spindle axis was discovered. This was related by frequency and amplitude to the rotating load. It was reduced by improving the alinement between the drive shaft and the test shaft, thereby reducing the loading of the test spindle through the drive coupling. More recently, this oscillation was reduced still further by unfastening the sheet-metal cover plate between the housing of the test bearing and the loading-bearing housing. Consequently, the dynamic deflections of the loading-bearing housing were not so readily transmitted to the housing of the test bearing. As a result, the amplitude of the oscillation, as measured by the dial indicators, was further reduced from 0.0005 inch to less than 0.0001 inch with the same rotating load. Accompanying this change, the eccentricity ratio increased from 0.87 to 0.90 when the test shaft was rotating at 500 rpm and an 18.8-pound-per-square-inch rotating load was applied at half the shaft speeds.

Since it was thus shown that results in closer agreement with theory could be obtained by eliminating extraneous loads on the test shaft, further changes were made in the test apparatus. As shown in figure 4, they are:

(1) Rubber coupling replaced by universal joints

(2) Gears driving the cam shaft moved to drive-shaft housing

(3) Motor removed from frame and remounted on separate stand

(4) Nylon bearings in loading mechanism replaced by babbitt and bronze bearings

(5) Screws removed from cover plate

(6) Bearings replaced in loading housing

These changes completely eliminated any loads produced by nonuniform rotation of the test shaft or the pull of the camshaft chain. Extraneous loads introduced through the loading bearings or through the drive coupling were reduced. However, some effect no doubt remains and would contribute to the reduction of eccentricity ratios at the higher shaft speeds. The change of the eccentricity ratio, as indicated by the two

upper curves of figure 7, is quite large and is in the direction of improved agreement with theory. These tests were run with an 18.8-pound-per-square-inch rotating load for shaft speeds as high as 850 rpm.

Deviations Found to be Negligible

A number of the discrepancies listed previously were found, either by theory or experiment, to have a negligible effect on the load-carrying capacity. These will be discussed briefly.

In the original construction of the test apparatus, the drive shaft and the test shaft were carefully alined. As time elapsed, misalinement developed which increased the oscillation of the bearing housings with respect to each other. Misalinements were intentionally introduced, so that the center line of the drive shaft was 0.010, 0.060, and, finally, 0.110 inch above the center line of the test shaft. The Lord bonded-rubber coupling could accommodate such misalinements, but, in so doing, it imposed a downward pull on the test shaft. These tests were run with an 18.8-pound-per-square-inch rotating load and speeds ranging from 250 to 1000 rpm. SAE 10 oil at a pressure of 40 pounds per square inch was used to lubricate the test bearing. No measurable change was observed in the eccentricity ratios for the first two misalinements, while, with the largest, a decrease of approximately 5 percent was observed. Since a misalinement of 0.110 inch between the drive shaft and the test shaft is much larger than that which could be unintentionally present, it is not believed that any error owing to this cause could be significant.

A mechanism has been provided for removing the weight of the test shaft from the test bearing. If the shaft weight were not correctly counterbalanced by this device, an additional steady load would be introduced. To test the effect of this error, a constant 6.2-pound-per-square-inch, unidirectional load was superimposed on an 18.8-pound-per-square-inch rotating load. Neither the shape nor the size of the orbit was affected, whether the additional load was applied upward, downward, or omitted altogether. Since the adjustment of the compensating load is accurate to approximately 1/2 pound per square inch, this source of error need not be considered further.

Simple calculations showed that the maximum centrifugal and gyroscopic forces on the testing-machine spindle are negligible.

The effect of possible air bubbles in the oil film was studied by replacing the pressure-feed system by gravity feed. Although the lubricating oil undoubtedly contained considerable dissolved air, no bubbles

were detected. With a rotating load of 18.8 pounds per square inch and a shaft speed of 850 rpm, no variation in eccentricity ratio was observed when the oil-feed pressure was varied between atmospheric and 50 pounds per square inch gage. Therefore, it is not believed that the lubrication system of this apparatus introduces air bubbles into the oil film to any great degree. However, it should be remembered that, without special precautions, the lubricating oil will contain dissolved air, and frothing is to be expected in the region of negative pressures.

Instability, accompanying turbulence in the oil film, has been examined as a possible source of unpredicted behavior. Using the criterion suggested by Wilcock (reference 8), it was found that turbulent flow would not occur in the test bearing even with the highest speeds and lowest viscosities used.

To simplify the analysis, side leakage, or axial flow of the lubricant, is commonly assumed to be negligible. In practice, however, axial flow is inevitable. In the test bearing, oil enters from two circumferential grooves, so that at each end of the test portion of the bearing, the oil pressure is uniform around the periphery. On the other hand, at the center of the test region, the oil pressure varies around the circumference from a maximum positive value to a maximum negative value. Therefore, there must always be variable axial pressure gradients in the oil film. Thus, the assumption that there is no oil flow along the axis of the bearing can never be fully satisfied.

The influence of such side leakage can be appraised by an experiment. Cutting off the feed pressure in one of the circumferential grooves causes a variation in axial pressure gradients and, consequently, in the amount of end flow. Any resulting change in the eccentricity ratio can be observed. A test was run under an 18.8-pound-per-square-inch load rotating at 425 rpm, with the test shaft running at 850 rpm. No change was observed in the eccentricity ratios, whether the oil pressures in the left and right grooves, respectively, were 40-40, 40-0, 0-40, or 0-0 pounds per square inch gage. This strongly suggests that side leakage has little influence on eccentricity ratios.

Temperature differences between the shaft and the test bearing or between the micrometer probes and the bearing will introduce errors resulting from unequal expansions. First, consider the variation in clearance between the shaft and the bearing. The spindle was made of heat-treated NE 8749 steel, while the steel-backed bearing was pressed into a cast-iron housing. During operation of the machine, the temperature of the test bearing frequently rises by 10° F or more. If both the shaft and bearing temperatures increase by this amount, the corresponding change in the clearance space would result in an error in eccentricity

ratio of about 0.01. On the other hand, a 3° F temperature difference between the shaft and the bearing would throw the measured eccentricity ratio off by about 0.03. Thus, a 4-percent possible error owing to temperature changes is entirely possible. However, this source of error has little correlation with the speed at which the test shaft rotates. Therefore, it is incapable of causing an effect which is so markedly dependent on shaft speed as that which has been observed.

Similar thermal expansions of the micrometer probes will cause similar errors. However, here again, the effect would not be speed-sensitive and is thus incapable of explaining the main experimental discrepancies.

Deviations Studied Qualitatively

Since the remaining deviations are not amenable to a quantitative analysis, they will be discussed in a qualitative manner.

A pivoted-pad bearing was installed as a support bearing in order to eliminate the whirling of the test shaft at the support end. While effective for this purpose, it has been recognized that damping forces may be introduced in this relatively stiff bearing Although this effect is minimized by the rather large distance between the support- and the test-bearing housings (25 in.), some effect might well remain. While the magnitude of this effect is not known, it is important to notice that its result will be to reduce the observed eccentricity ratios, thus corresponding to the discrepancies that were found. Furthermore, in agreement with experimental results, this effect would increase with increased speed.

Extraneous loads on the test shaft have been discovered both at the drive coupling and at the loading bearings. Reduction or elimination of these loads resulted in increased eccentricity ratios when a rotating load was applied at half the shaft speed. Here again, the effect of these loads would be greater at higher shaft speeds, which agreed with the observed results.

The effect of the final discrepancy is in opposition to what is found by experiment. The theoretical derivation assumes an unbroken oil film about the entire journal. Customary values of the applied load and the oil-feed pressure are 18.8 pounds per square inch and 40 pounds per square inch gage, respectively. Consequently, there is a good possibility that oil pressures on the unloaded side of the bearing tend to become negative, with subsequent rupture of the oil film. This effect would counteract those previously mentioned, forcing the shaft center to describe larger than normal orbits.

EFFECT OF VARYING TEST CONDITIONS

Thus far, this report has dealt with a constant load rotating at one-half the shaft speed. The Sommerfeld number has been varied by increasing the speed of the test shaft. Using other combinations of test conditions, the problem can be examined by different approaches. In this section, tests under conditions other than the above will be discussed.

Variation of N_p/N_j Ratio

Figure 8 shows the effect of the improvements made in the testing machine on the eccentricity ratios, for rotating loads at various frequencies. Both before and after the modifications, the eccentricity ratio displayed a sharp peak in the vicinity of $N_p/N_j = 1/2$. However, when the misalinements and vibrations were reduced by improvements in the machine, this peak came much closer to the theoretical value of 1.0, as is apparent in figure 8.

At first thought, it appears peculiar that improving the alinement of the testing machine resulted in poorer bearing performance (increased eccentricity ratio). However, figure 8 reveals that this was true only when the load was applied at or near one-half the shaft speed. For values of N_p/N_j less than about 0.45 and greater than about 0.55, the well-alined bearing performed better (had lower eccentricity ratios) than the misalined one. The reason for the anomalous behavior in the vicinity of $N_p/N_j = 1/2$ has been discussed previously. It is simply that, theoretically, no load can be supported by the oil film when $N_p/N_j = 1/2$, and improving the alinement results in operating conditions which more nearly approximate those assumed by the theory. Furthermore, it has been shown qualitatively that small misalinements can cause centering forces, which prevent the eccentricity ratio from reaching unity.

The inset of figure 8 shows that, after the modifications were made, the frequency ratio at which the maximum eccentricity ratio was reached was about 0.496. During a previous study (reference 1), it was found that the natural frequency of rotation of the journal center in its orbit under no load was also slightly less than one-half the shaft speed. It seems logical that the maximum eccentricity ratio would occur at the natural whirling frequency of the shaft.

Since the values of N_p/N_j in this testing machine were fixed by the available change gears, it was unlikely that the peak eccentricity

ratio could be observed directly. To remedy this, the camshaft was disconnected and an independent, variable-speed motor was used to drive the rotating-load mechanism. As the frequency ratio was changed through a range near the 1/2 ratio, the oscilloscope trace was recorded photographically. One photograph so obtained is shown in figure 9. No significantly larger eccentricity ratios were obtained by this procedure than had been observed previously.

Use of Alternating Load Instead of Rotating Load

A sinusoidally alternating load at one-half the shaft frequency was tried in place of the previously studied rotating load. The magnitude of the load was ±6.2 pounds per square inch of projected area, and kerosene was used to lubricate the test bearing. As with rotating loads, the eccentricity ratios were found to be much higher than those obtained before modification of the test apparatus. Since the results were analogous to those observed with rotating loads, this type of loading was not used further.

Variation of Load Magnitude

With SAE 10 oil in the test bearing, eccentricities were measured under a number of rotating loads at the same shaft speed. The ratio of load speed to shaft speed was 1/2. Figure 10 shows the eccentricity ratios so obtained, in comparison with those obtained previously. The increase in eccentricity values after modification of the test apparatus was well marked. There also may be noticed a marked decrease in the change in eccentricity ratio accompanying changes in shaft speed.

This decrease may be interpreted in two ways. First, it may be taken to indicate that eccentricity ratios of unity are approached asymptotically. That is, greater and greater improvements in the test conditions are necessary to increase the eccentricity ratio by equal increments. Secondly, it shows that the importance of variation in speed has diminished significantly. The old data show no correlation between eccentricity ratio and Sommerfeld number. It is apparent from the lower curves of figure 10 that, before the machine was improved, doubling the speed did not have the same effect on η as halving the load. On the other hand, with the revised machine, this correlation is much better, indicating that perhaps Sommerfeld number is a valid parameter.

Variation of Lubricant in Test Bearing

Figure 7 includes eccentricity measurements made both with kerosene and with SAE 10 oil as the lubricant. As indicated above, previous results did not yield a single curve of η against S when different lubricants were used. This is apparent from the radically different slopes of the curves in figure 6 for kerosene and SAE 10 oil, before modification of the test apparatus. However, as the machine was further and further improved, the alinement of the kerosene points and SAE 10 points was also improved. This would suggest, then, that the failure of measured eccentricity ratios under cyclic loads to correlate with Sommerfeld number was caused by the nonideal test conditions.

ANALYSIS AND DISCUSSION

The results of this work can be viewed in two ways. First, they may be seen as an analysis of the behavior of an idealized bearing; secondly, they provide information on the behavior of a bearing under practical conditions.

A complete analysis of the test conditions was made in order to compare them with the conditions assumed by theory. The majority of the discrepancies have been accounted for by eliminating them in the test apparatus or by showing them to be negligible. As a result, the observed eccentricity ratios, with $N_p/N_j = 1/2$, have approached the theoretically predicted value of unity more closely than before. However, some nonideal conditions still remain. For example, the low-pressure region of the oil film may rupture under sufficiently high cyclic loads; yet, no account is taken of this phenomenon in the theory. Also, there remains the possibility that the pivoted-pad support bearing exerts sufficient stiffening or damping to prevent the shaft from rubbing on the test bearing when the theory says it should.

Practical bearings are subject to deviations from ideal conditions even more than is the precision-built testing machine. Therefore, this study suggests what might be expected when commercial bearings are operated under cyclic loads at or near one-half the shaft speed.

Minor vibrations or small static misalinements which cause the axis of the bearing to be misalined with respect to the axis of the shaft are not harmful. In fact, if the angle between the two axes is of the order of 0.0004 radian or less, the eccentricity ratio may even be slightly reduced. Superimposed steady loads, of the order of 10 or 20 percent of the magnitude of the cyclic load, apparently have no appreciable effects.

CONCLUDING REMARKS

The general conclusion is that the theoretical prediction of zero oil-film thickness in bearings under cyclic loads, applied at one-half the shaft speed, is perfectly valid under ideal conditions. The failure of the experimental results to agree exactly with theory is believed to be caused simply by the failure of the testing conditions to correspond exactly with those assumed in the theory.

Battelle Memorial Institute
Columbus, Ohio, December 21, 1950

REFERENCES

1. Dayton, R. W., and Simons, E. M.: Hydrodynamic Lubrication of Cyclically Loaded Bearings. NACA TN 2544, 1951.

2. Robertson, D.: Whirling of a Journal in a Sleeve Bearing. Phil. Mag., ser. 7, vol. 15, no. 96, Jan. 1933, pp. 113-130.

3. Swift, H. W.: Fluctuating Loads in Sleeve Bearings. Jour. Inst. Civ. Eng., no. 4, 1936-37, pp. 161-195.

4. Dick, J.: Alternating Loads on Sleeve Bearings. Phil. Mag., ser. 7, vol. 35, no. 251, Dec. 1944, pp. 841-848.

5. Bell, J. C.: Note on the Hydrodynamic Theory of Journal Bearings. Abstract, Phys. Rev., vol. 68, nos. 3 and 4, second ser., Aug. 1 and 15, 1945, pp. 101-102.

6. Frankel, A.: Calculation of the Performance Characteristics of Plain Bearings. The Engineers' Digest (Am. Ed.), vol. 3, no. 8, Aug. 1946, pp. 400-403.

7. Burwell, J. T.: The Calculated Performance of Dynamically Loaded Sleeve Bearings. Jour. Appl. Mech., vol. 14, no. 3, Sept. 1947, pp. A-231 - A-245.

8. Wilcock, D. F.: Turbulence in High-Speed Journal Bearings. Trans. A.S.M.E., vol. 72, no. 6, Aug 1950, pp. 825-834.

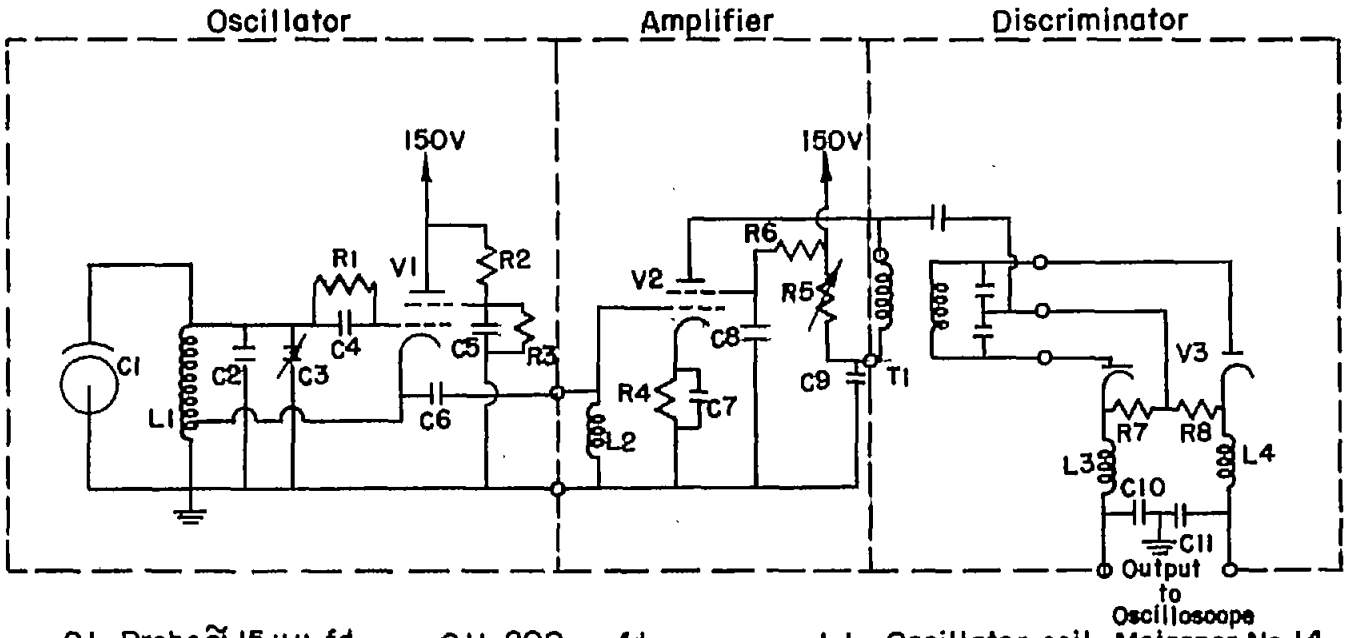

C1	Probe ≈ 15 μμ fd	C11	200 μμ fd	L1	Oscillator coil, Meissner No. 14-1046
C2	70 μμ fd	R1	100K ½ ω	L2	10 μh Q<30
C3	50 μμ fd var	R2	22K 1 ω	L3	1 μh
C4	50 μμ fd	R3	68K 1 ω	L4	1 μh
C5	.01 μ fd	R4	1K ½ ω	T1	Discriminator transformer Meissner No. 17-3484
C6	70 μμ fd	R5	100K var. 1 ω	V1	6AK5
C7	500 μμ fd	R6	41K 1 ω	V2	9003
C8	.002 μ fd	R7	100K ½ ω	V3	6AL5
C9	500 μμ fd	R8	100K ½ ω		All filament voltages 6.3 volts
C10	200 μμ fd				

Figure 1.- Schematic diagram of simplified capacitive micrometer.

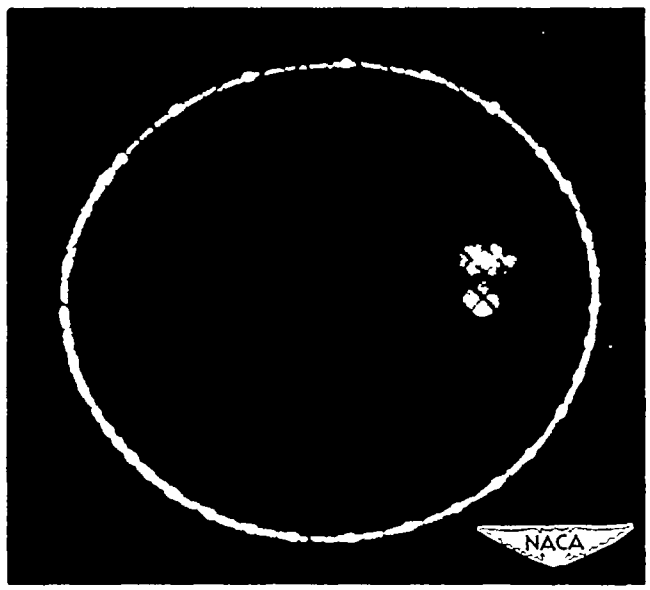

Figure 2.- Typical clearance orbit. Dots on trace represent pauses in motion. X740.

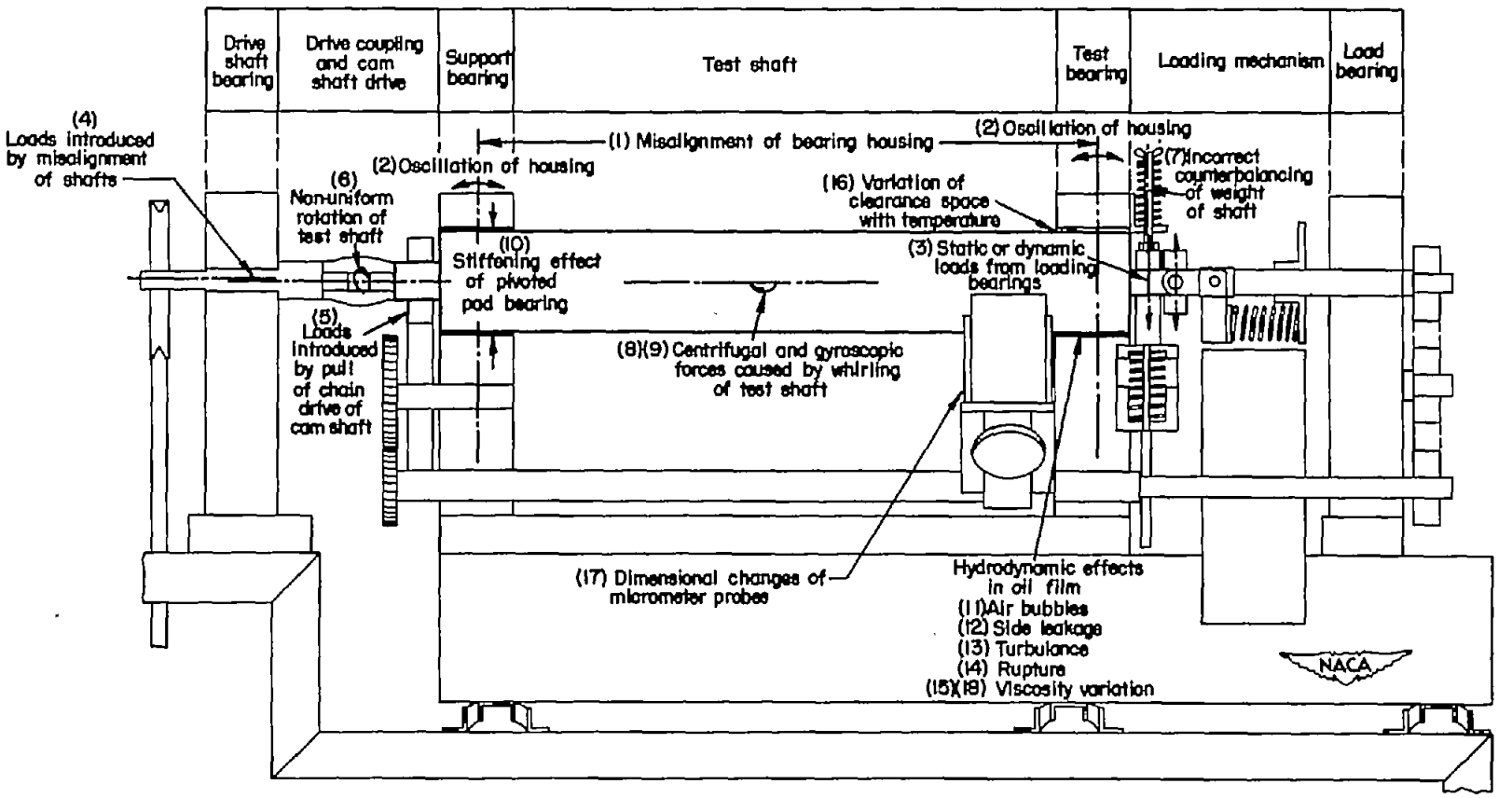

Figure 3.- Schematic drawing of test machine showing deviations from theoretical behavior.

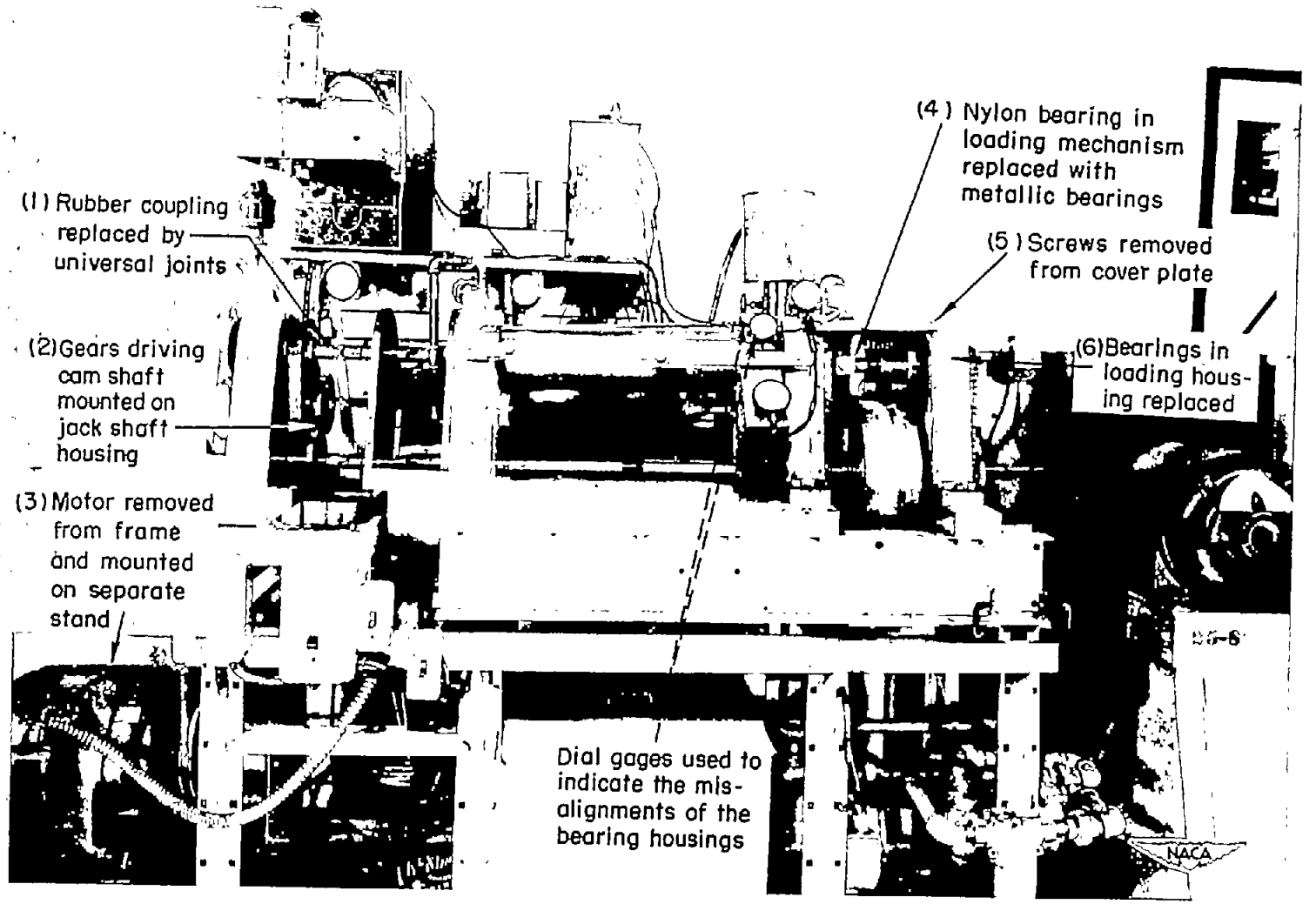

Figure 4.- Modification of bearing-testing machine.

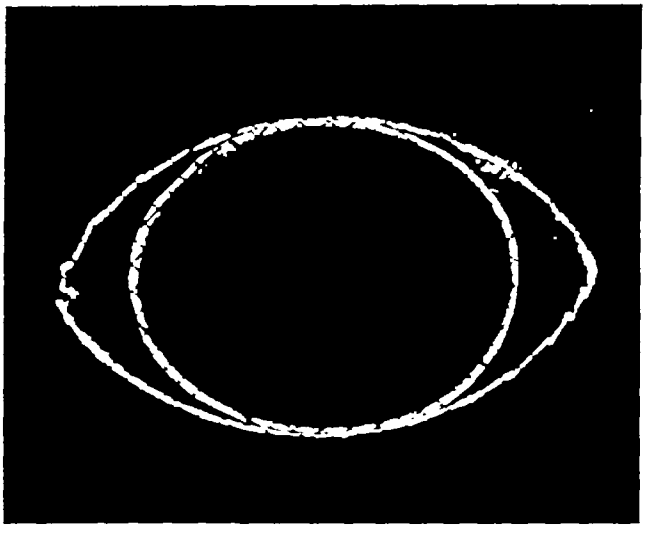

(a) Orbits obtained under extreme misalinement of bearing housings. Dial-gage reading, -0.015 inch.

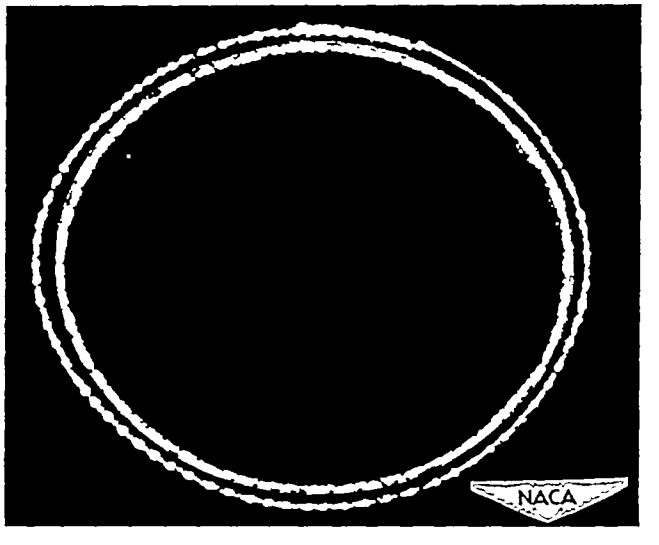

(b) Orbits obtained under almost perfect alinement of bearing housings. Dial-gage reading, 0.002 inch.

Figure 5.- Effect of misalinement of bearing housings. Path of shaft center superimposed on clearance orbit; shaft rotating at 850 rpm; load of 18.8 pounds per square inch rotating at one-half shaft speed; test bearing lubricated with SAE 10 oil at 40 pounds per square inch. X770.

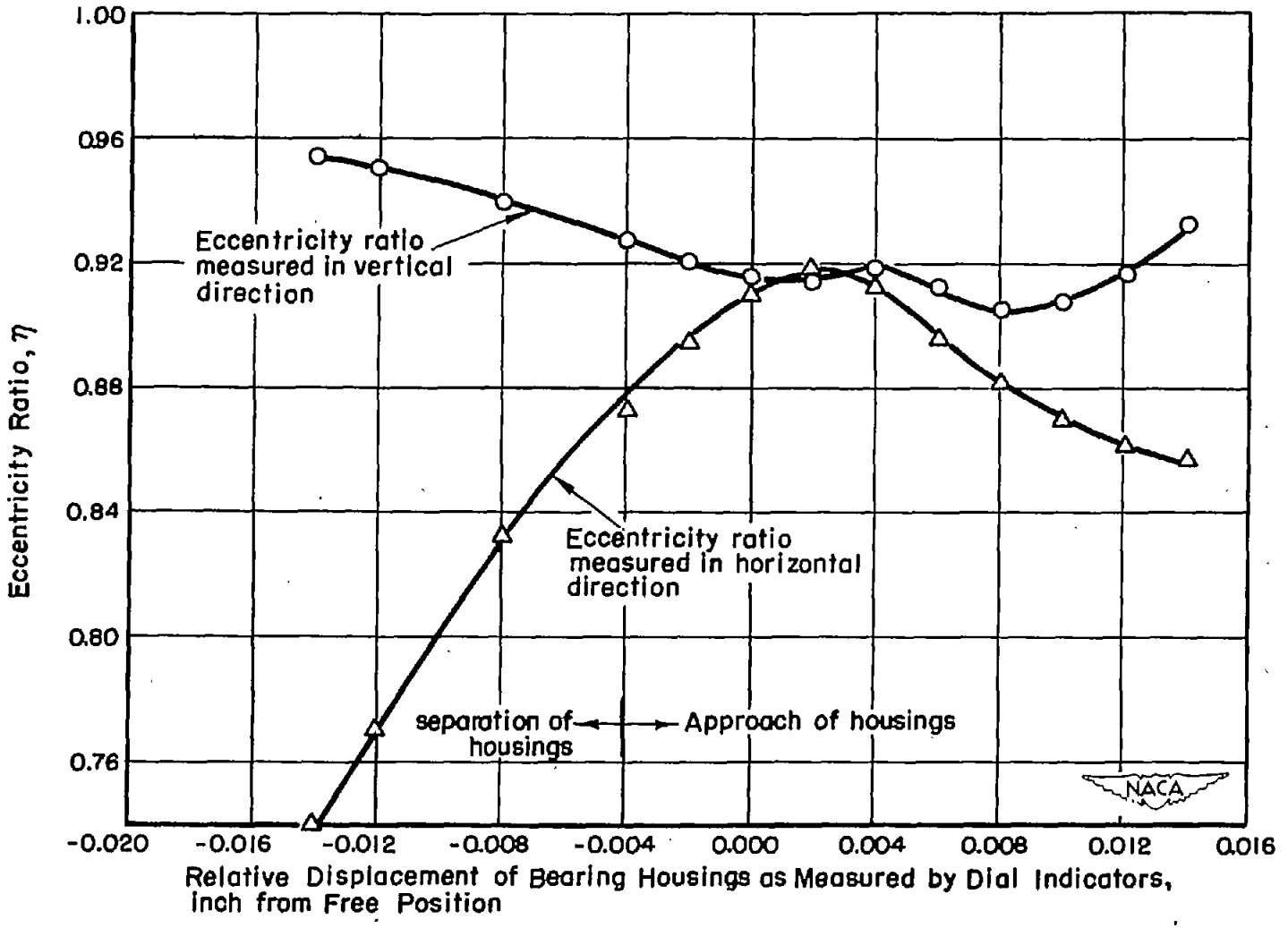

Figure 6.- Variation of eccentricity with misalinement of bearing housings. Shaft speed, 850 rpm; 18.8-pound-per-square-inch rotating load driven at one-half shaft speed; lubricant, SAE 10 oil.

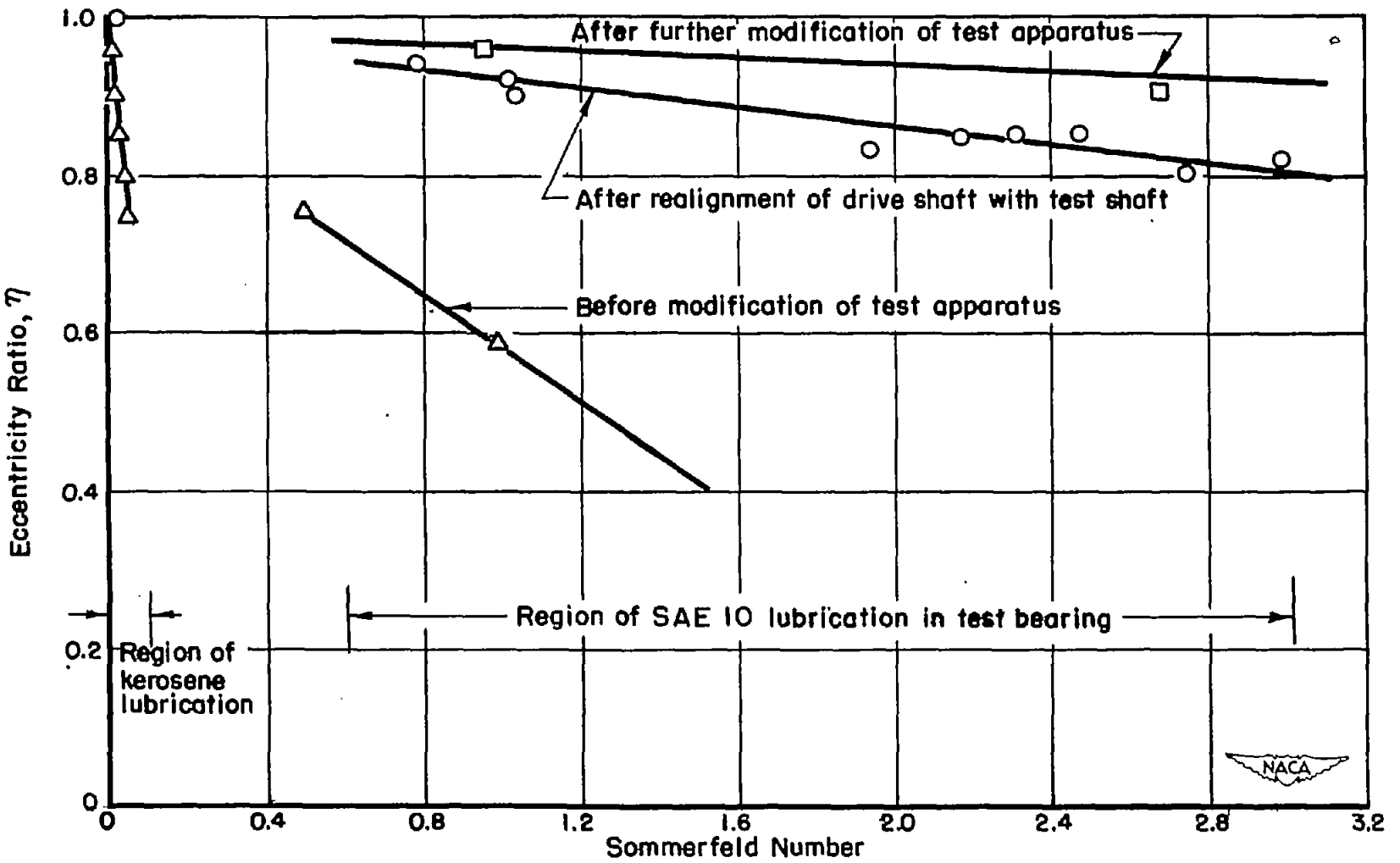

Figure 7.- Variation of eccentricity ratio with Sommerfeld number for $N_p/N_j = 1/2$; constant rotating load of 18.8 pounds per square inch of projected area.

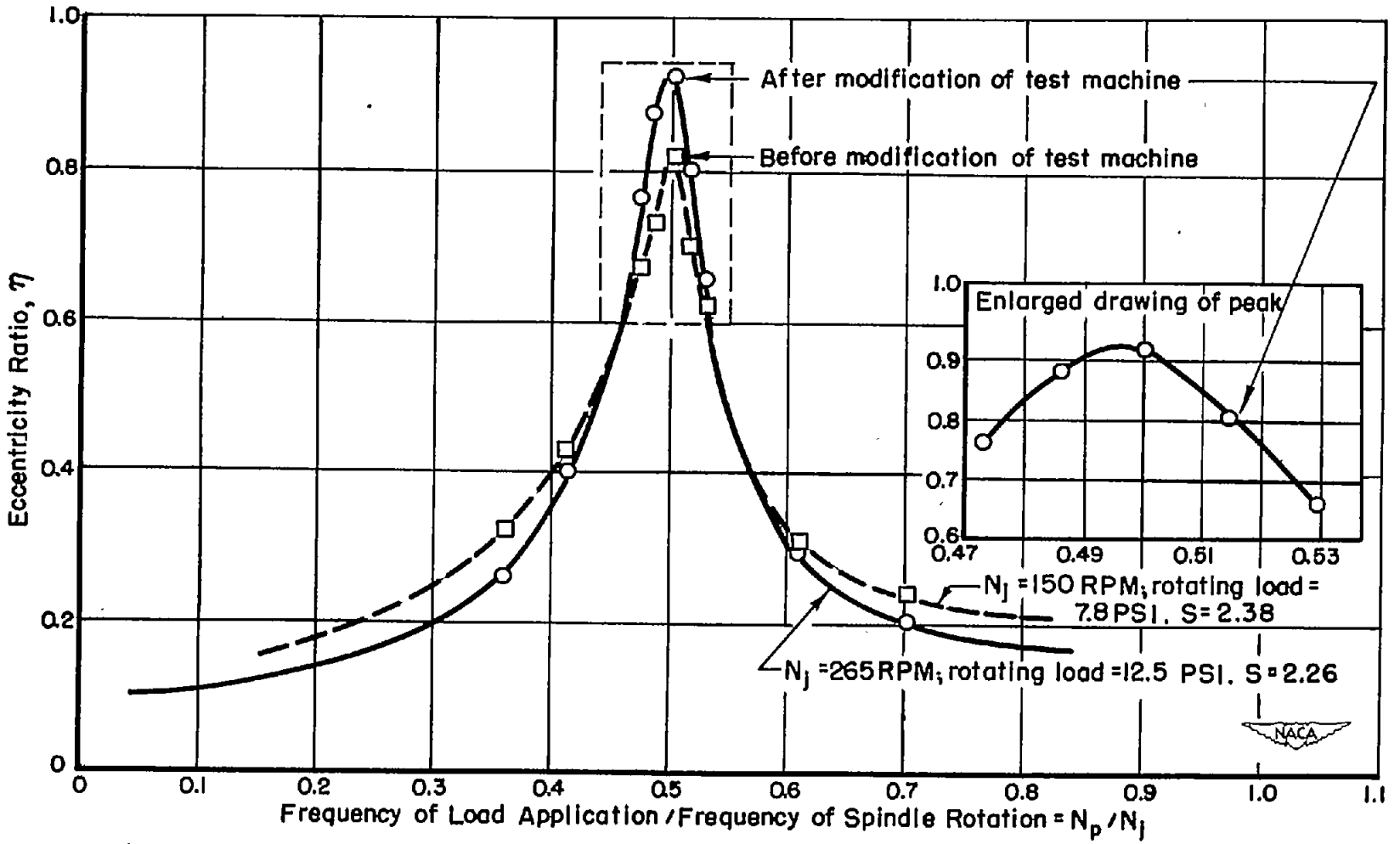

Figure 8.- Effect of relative frequency of load application on eccentricity ratio. Lubricant in test bearing, SAE 10 oil.

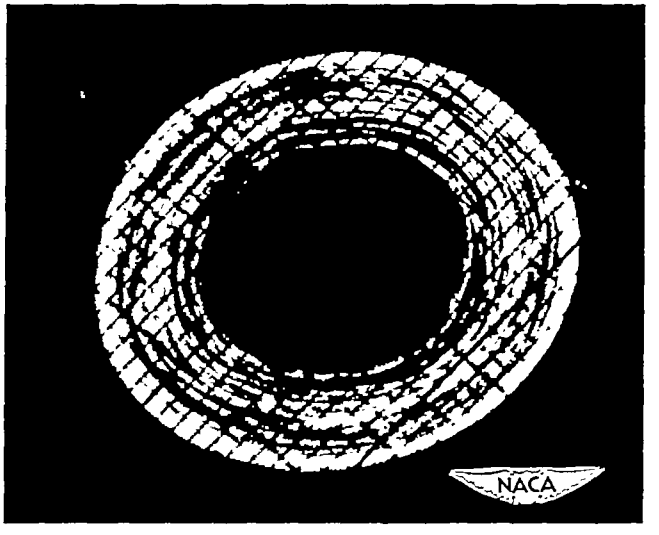

Figure 9.- Trace obtained with a shaft speed of 850 rpm. Speed of load varied over a range above and below the speed one-half that of shaft; SAE 10 oil used as lubricant at 40 pounds per square inch; rotating load, 18.8 pounds per square inch. X700.

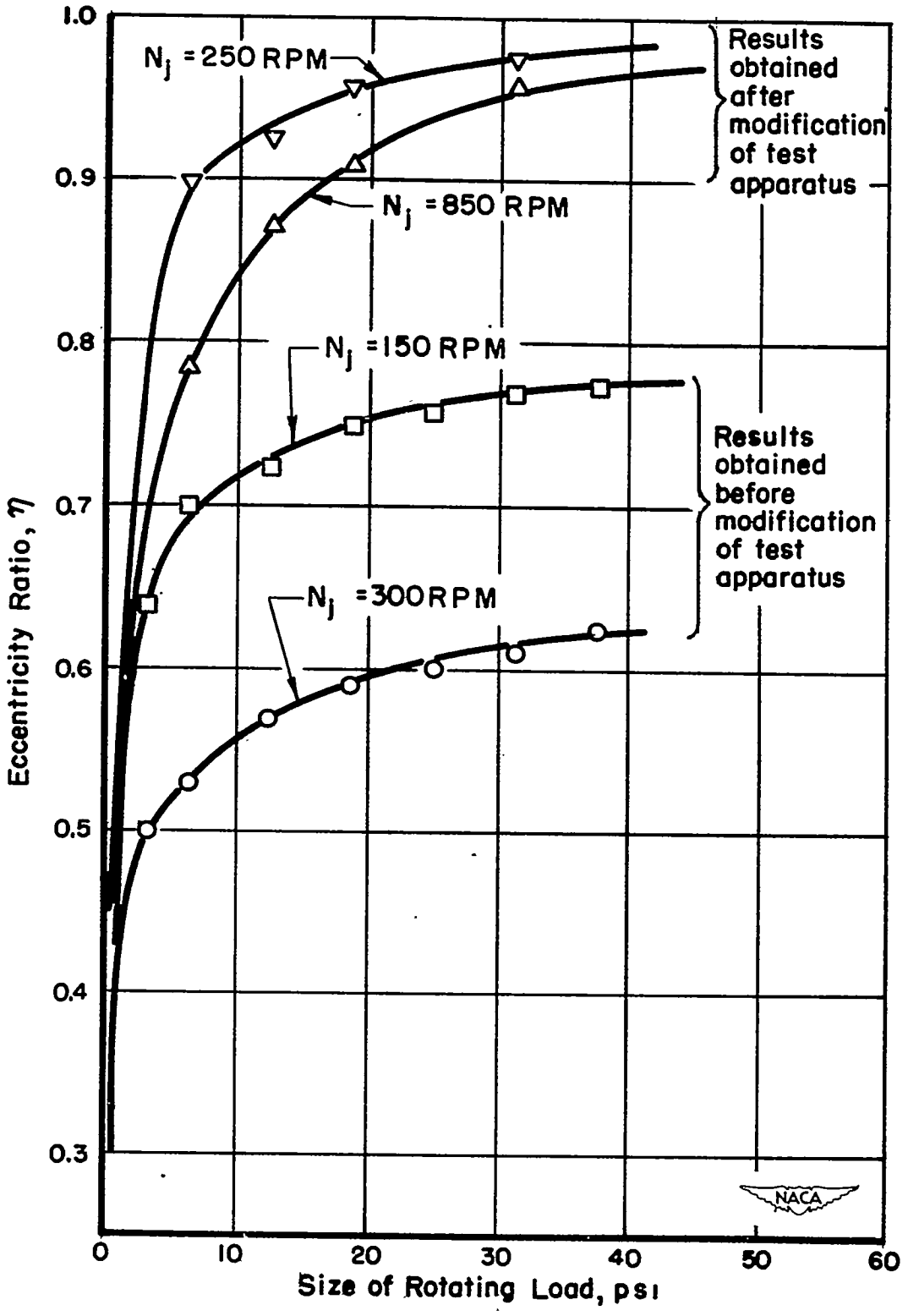

Figure 10.- Variation of η with size of rotating load. Test-bearing lubricant, SAE 10 oil; $N_p/N_j = 1/2$.

NACA-Langley - 11-2-51 - 1000