NACA TN 2573
8955

TECH LIBRARY KAFB, NM
0065530

NATIONAL ADVISORY COMMITTEE FOR AERONAUTICS

TECHNICAL NOTE 2573

DEVELOPMENT OF AUXILIARY CYCLOTRON EQUIPMENT FOR USING TRITIUM AS BOMBARDING PARTICLES IN A CYCLOTRON

By D. N. Kundu, F. G. Boyle, and M. L. Pool

The Ohio State University

Washington
December 1951

AFMDC
TECHNICAL LIBRARY
AFL 2811

TECH LIBRARY KAFB, NM

0065530

1P

NATIONAL ADVISORY COMMITTEE FOR AERONAUTICS

TECHNICAL NOTE 2573

DEVELOPMENT OF AUXILIARY CYCLOTRON EQUIPMENT FOR USING TRITIUM AS BOMBARDING PARTICLES IN A CYCLOTRON

By D. N. Kundu, F. G. Boyle, and M. L. Pool

SUMMARY

A circulating system for radioactive tritium was constructed, assembled, and tested. The results showed that the pumping speed of the system was too low for use. Therefore, bombardments in the cyclotron with tritium particles could not be made during the course of this project. With a sufficiently increased pumping speed, it is believed that the circulating system would provide satisfactory operation.

INTRODUCTION

It is well-known that with the introduction of deuterons as bombarding particles a much greater variety of nuclear reactions was made possible than was previously feasible by using protons only. Apart from all the radioactive species which could be obtained from a given target element with a proton beam, there resulted all the additional activities producible by neutron irradiation as well, with substantial yields. Not only were those nuclei produced artificially where the bombarding particles had penetrated the nuclear potential barrier and had formed a compound nucleus, but also a different phenomenon was noticed wherein the bombarding particle did not have to enter as a whole into the target nucleus but could effect reactions partly from outside. For example, the deuteron may be polarized, the neutral neutron may easily enter into the nucleus, and the charged proton part may be repelled away from the nuclear potential barrier. This type of reaction is called an Oppenheimer-Phillips process as distinguished from what is called the Gamow-Condon-Gurney compound-nucleus formation process. By deuteron bombardment it is thus possible to produce all the usual neutron-induced activities.

The essential point to notice is that the deuteron cannot only simulate all the known neutron reactions like (n,γ), (n,α), $(n,2n)$, (n,p), and so forth, but the bombardments of certain target materials such as beryllium and lithium with deuterons are still some of the most convenient sources of neutrons.

The factor that endows the deuteron with these additional triumphs over the proton as a bombarding particle is the neutron which is in combination with the proton in the deuteron nucleus. The tritium (H^3) nucleus has two neutrons attached to a single proton and the helium isotope He^3 nucleus has two protons in combination with a single neutron. For this reason it is expected that H^3 and He^3 will give rise to a variety of new types of nuclear reaction. Also, because of the larger neutron content in the H^3 nucleus, H^3 may provide a very convenient source of neutrons.

A start had already been made for using H^3 as a bombarding particle in this laboratory and interesting reactions like (H^3, He^3) and (H^3,p) have already been reported. (See references 1 and 2.) Two neutrons could be introduced into the same nucleus (reference 3), a phenomenon which is difficult to observe even under a prolonged exposure in the intense neutron flux in a pile. Evidence was obtained of peculiar light nuclei like the "di-neutron" composed of only two neutrons held to each other. Investigations of these strange vistas that may open up with the use of H^3 are considered very important. The serious difficulty in the way of such studies was that H^3, which was used in the above experiments, had to be artificially produced by bombarding beryllium or silver with deuterons. Though the yield of H^3 from such sources was just sufficient for certain prolific nuclear reactions, yet it is at once realized that it would be of immense interest to devise an arrangement which would permit the acceleration of H^3 and He^3 in the cyclotron in the same way that protons, deuterons, and alpha particles are now being accelerated.

The extreme rarity of these elements and especially the radioactive nature of H^3 present problems which are new and much more complicated than those encountered with readily available gases such as hydrogen and deuterium or helium. Recently, 4 cubic centimeters of H^3 and 1 cubic centimeter of He^3 with 50-percent purity became available to this laboratory for this purpose. These are extremely small amounts of material compared with the cylinders of deuterium and helium that are customarily employed in cyclotron practice. In order that any bombardment be at all possible the gas must be injected, the unused portion withdrawn by the diffusion pumps, collected, and reinjected continuously into the cyclotron tank. The use of such a closed system presents a second complication, the elimination of the unavoidable natural leakage in a system as large as the cyclotron tank and its pump lines. The air which enters the closed system from such leakage must be removed continuously to insure a backing pressure low enough for efficient operation of the diffusion pumps.

Oil diffusion and mechanical pumps, which form an essential part of the cyclotron, must be eliminated. The small amount of H^3 in the closed system might easily be lost through adsorption, chemical combination, or suspension in oil.

A detailed study of these various aspects of the problem, as well as the present state of construction of the various components of the system, is discussed in this report. This investigation was carried out at The Ohio State University Research Foundation under the sponsorship and with the financial assistance of the National Advisory Committee for Aeronautics.

Acknowledgment is gladly made of the valuable help rendered by Mr. Lytle and his associates of the Surface Combustion Co., Columbus, Ohio. Not only did they supply all the stainless steel used on this project, but also placed at the authors' disposal the facilities of their development laboratory and the services of an expert heli-arc welder for a period of 3 days. There were no charges for either materials or services.

DESCRIPTION OF APPARATUS

Cyclotron Vacuum System

The tank of The Ohio State University cyclotron is evacuated by two oil diffusion pumps of 6-inch diameter backed by a Model "100" Cenco Hyper-vac mechanical pump. Experiments were made to determine the volume of natural leakage of the vacuum system. It was found that, with the gas inlet closed and the diffusion pumps and the mechanical pump in operation, 15 cubic centimeters of gas at room temperature could be collected from the exhaust of the mechanical pump in 1 hour.

It was also found that the gas pumped from the system remained suspended within the large volume of oil in the mechanical pump in the form of small bubbles which were liberated very slowly. In normal operation, 4 cubic centimeters of gas are used up in a fraction of a minute, and, if the usual pumping system were used, this small volume of H^3 might easily be imprisoned within the oil for long periods of time, thus making reinjection of the gas after recovery impracticable on a continuous bombardment.

The 4 cubic centimeters of H^3 may easily be adsorbed within the oil. Furthermore, oils being unsaturated hydrocarbons, it is also suspected that a small amount of H^3 might enter into chemical reaction (by

hydrogenation) and thus be lost. The latter possibility is especially probable when the oil is hot, as is the case with the oil in the diffusion pumps.

It was, therefore, considered necessary to discontinue the use of the oil diffusion pumps and to cut the mechanical pump off from the system when H^3 was injected into the tank. This was done as follows. From the deflector porthole in the cyclotron tank $\left(\text{brass, } 2\frac{1}{2} \text{ inches in diameter}\right)$ a separate vacuum line was constructed which, through a gate valve and a liquid-air trap, connected with two all-glass mercury diffusion pumps. The connections and joints from these pumps to the trap were of Pyrex piping. These pumps are designed to work with a backing pressure as high as 10 millimeters of mercury. The initial evacuation of the cyclotron tank was effected using the oil diffusion pumps and the mechanical pump. When operating pressure was obtained, the oil diffusion pumps were switched off and the mechanical pump was cut off with a large stopcock. The mercury pumps were started immediately to maintain the vacuum in the chamber during the operational stage. The backing was supplied to the mercury pumps by means of a specially designed Toepler pump which also compressed and stored the exhaust gas in a reservior ready for reinjection.

Toepler Pump Circulating System

The Toepler pump is an arrangement which, at regular intervals, traps a volume of gas from a system, compresses it through proper valves, and stores it in a suitable reservoir. The usual pumping fluid used in such a system is mercury. To meet the needs of the present problem two types of Toepler pumps were designed and built, one an all-glass unit and the other a stainless-steel unit. The design of the stainless-steel unit is shown in figure 1. The pump was made of metal in order to secure strength and rigidity of the numerous joints, tubings, and so forth. Stainless steel was selected as a suitable metal for construction. Mercury easily reacts with most of the usual metals to form amalgams, but stainless steel was found to maintain a shiny surface when in contact with mercury.

As shown in the diagram, the lower chamber A is the mercury reservoir and the intermediate chamber B is in communication with the exhaust side of the diffusion pumps. Before beginning the operation, the entire volume above A has to be evacuated. During operation the unused H^3 gas from the cyclotron tank is pumped out by the mercury diffusion pumps and most of the gas will collect in volume B. After allowing sufficient time for enough gas to accumulate in B, the small leak into chamber A is opened

so that atmospheric pressure will slowly push the mercury from A to B through the tube T. As the mercury rises in B, the gas inlet from the diffusion pump exhausts is cut off by the mercury at the junction J. Further rise of the mercury compresses the H^3, along with the other gaseous impurities, into a small volume immediately under the valve V. This valve is a well-machined truncated cone T sitting in a well-ground seat. Under ordinary circumstances the valve remains closed by gravity with a small pool of mercury effecting the vacuum seal. When the gas and the mercury head push from below, the valve opens momentarily and the gas is transferred to the chamber C. As the cone T rises, the stem L trips a sealed-in mercury switch S which, through a relay, starts the mechanical pump. The upper part of the lower chamber A is thus evacuated again. The mercury breaks off at the valve junction and gradually descends, refilling chamber A. Thus, chamber B is again put into communication with the exhaust from the diffusion pumps, completing the cycle.

The weight of the conical piece and its taper were so calculated that the cone will seat into position before all the mercury leaves chamber C. This insures that a small amount of mercury remains trapped above the valve to form the mercury seal mentioned above.

As the mercury returns to the lower chamber A, the level rises until it trips the mercury switch S. This stops the mechanical pump, the atmospheric leak again pushes the mercury up, and the cycle continues as before.

As the body of the pump is of metal, the electrical electrodes were all taken through terminals sealed in glass. In usual switching arrangements, when the circuit is broken, there is a small spark across the gap. In working with a small quantity of H^3 mixed with a large amount of air, such sparking cannot be tolerated because it may lead to the combination of H^3 with the oxygen, forming heavy water $H^3{}_2O$. The entire amount of H^3 might be lost in a few cycles. This difficulty was eliminated by using tilting mercury switches which are completely sealed in glass capsules. The position of the mercury levels tilts the switch through the proper angle, thus making the necessary electrical contact. The electrical circuit is shown schematically in figure 2. The relay employed is a triple-pole, single-throw relay working with ordinary 110-volt, 60-cycle alternating current.

Purifying System: Liquid-Hydrogen Trap

It has been mentioned that the cyclotron tank and pump lines had a natural leakage of approximately 15 cubic centimeters per hour. This gas, consisting mainly of air, would unavoidably enter the closed system. The

importance of freeing the H^3 from this large excess of air becomes at once apparent, since otherwise the H^3 would be so diluted that no beam would be obtained in the cyclotron after a short time of operation (of the order of a few minutes).

On detailed scrutiny, chemical absorbers to remove the contaminating gases were found unsuitable since no absorber would selectively remove both nitrogen and oxygen without also removing hydrogen, at least by adsorption. The only practicable method seemed to be to freeze out the air with the aid of a liquid-hydrogen trap. However, the use of liquid hydrogen as a cooling agent for this purpose involved the development of a refined technique of handling, especially in a place like the cyclotron laboratory with its innumerable spark-generating electrical contacts for relays, motors, and so forth. In view of the well-known hazards involved in the possibility of a hydrogen explosion, every precaution was taken to avoid any such incident. The design of the liquid-hydrogen trap is shown in figure 3. The material employed for the walls of the trap is stainless steel. All joints were heli-arc welded to prevent cracking, with subsequent leakage, at low temperatures. Any such leakage with its contamination of the surrounding air would result in a serious health hazard to working personnel from radioactivity of H^3 gas.

The trap is in communication with the upper chamber C of the Toepler pump through a stopcock T_1. The H^3 gas, mixed with impurities, enters through the outer tube G and, after the impurities have been solidified, is drawn out through the inner tube H. This purified gas is then injected into the cyclotron through the usual system of needle valves. Enough clearance has been provided between the inner and outer tubes so that the solidified gases do not block the passage completely. The outer tube is jacketed by the Dewar flask I which contains the liquid hydrogen. The flask is supported from below on a properly shaped wooden block and a cushion. The upper edge of the flask presses against a flat padding housed in the brass ring J which is slipped around the outer tube. An outer metal jacket covers the whole flask and is threaded to the brass ring so that no appreciable quantity of hydrogen can leak away into the room through the felt. The brass ring is provided with two holes, one for pouring the liquid hydrogen in, and the other to provide an escape for the evaporated hydrogen through a long capillary tube exhausting outside the room. When enough solid air accumulates within the trap, the stopcocks T_1 and T_2 are closed, T_3 is opened, and the Dewar flask containing liquid hydrogen is removed. The solidified contaminating gases evaporate away as the temperature begins to rise. The stopcock T_3 is then closed again, T_1 and T_2 are opened, and the bombardment is continued.

Vacuum-Pump System: Diffusion Pump, Liquid-Air Trap and Fixtures to Cyclotron Tank

The initial evacuation of the cyclotron tank can be effected in a reasonable period of time by using the two oil diffusion pumps in conjunction with the Cenco "100" Hyper-vac mechanical pump alone but not by a system of as low a speed as can be attained in the usual Toepler pump. Therefore, it is necessary to use the already-existing evacuating arrangements of the cyclotron. After the operating vacuum has been obtained and the chamber has been baked for some time by induction heating, the oil diffusion pumps and the mechanical pumps are shut off. The stand-by mercury pumps along with the Toepler pump are then set into operation.

The schematic arrangement of this auxiliary equipment attached to the cyclotron chamber is shown in figure 4. The vacuum line from the cyclotron tank was taken through the deflector porthole A. It was bent horizontally at an angle of 60° so as to be clear of the coils of the cyclotron magnet. In this way the mercury pumps could be housed on the floor in front of the cyclotron in a suitable rigid wooden framework. Between the cyclotron tank and the high-vacuum side of the mercury diffusion pumps there is a 2.5-inch brass gate valve and a liquid-air trap in which to freeze mercury. The gate valve which was constructed has the advantage of having a double seal, thus insuring good vacuum tightness. The liquid-air trap shown in figure 5 was made of stainless-steel tubing to guard against amalgamation of the mercury. The inner tube, which is surrounded by a Dewar flask containing liquid air, connects with the high-vacuum side of the mercury pump. The mercury pump used for this purpose has a built-in heater unit and water cooling and has an operation rating of 10^{-5} to 10^{-6} millimeter of mercury with a maximum allowable backing pressure of 10 millimeters. Provision was made for using another similar system in parallel so as to increase the speed of pumping if, as a result of testing with deuterons, the speed of the resultant diffusion pump in conjunction with the Toepler pump were found to be too small. It was expected that it might be possible to arrive at a rate of circulation large enough to cope with the amount of gas introduced into the system by natural leakage. The connections from the diffusion pumps to the Toepler pump were made somewhat narrow for convenience of coupling with the output side of the liquid-hydrogen trap. Between the trap and the diffusion pump there was inserted a branch for housing the glass capsule containing H^3. The H^3 capsule is opened into the closed circulating system, when needed, by a mechanism detailed in the following section.

H^3 Injection System

The exact design of the H^3 capsule and its housing was not disclosed by the Argonne National Laboratory, from which it was obtained. Broadly speaking, an inner seal is drawn out into a capillary seal, covered by a wider sealed tubing. The outside tube is sealed into a glass tube of the same diameter and accommodated in a brass cylinder. At a convenient point there is a steel ball which can be actuated by an electromagnet and made to impinge on the capillary seal with sufficient force to break it. The brass cylinder communicates with the exhaust side of the liquid-hydrogen trap as shown in figure 3. After initial testing with deuterons, the capsule can be crushed open and the H^3 introduced into the system. The seal at C is brass sealed to steel with a thin rubber gasket and is covered on the outside with sealing wax.

Pyrex Glass Toepler Pump

Figure 6 shows the construction design of the Pyrex glass Toepler pump. The lower chamber A acts as a mercury reservoir and the middle chamber B is in contact with the exhaust side of the mercury diffusion pumps, as in the case of the stainless-steel pump. The upper reservoir C serves as a storage tank for the mixture of H^3 and air from the cyclotron tank. The float valve V was specially designed to maintain a mercury seal.

The valve V consists of a tapered glass cone fitting into a ground-glass seat. The stem of the cone is hollow. Some iron powder is sealed within the hollow of the tube. The glass tube containing the iron is bulged in the middle and its vertical motion is limited by the teats projecting from the inner walls of the outer glass bulb within which the float operates. Lateral tilts are also reduced to a minimum by providing vertical extensions to the float, both at the top and the bottom. The extensions work within the vertical tubes with a very small clearance so as to provide passage for the mercury but prevent any considerable tilting. The shoulder of the cone has an annular valley which permanently keeps some mercury trapped. The moving float has a cyclindrical downward projection which dips into the mercury pool when the cone is seated in its ground-glass seat. This, therefore, provides a double seal, one at the ground-glass surface, the other by the mercury. When the working gas or the mercury column pushes from below, the conical seal is opened. This upward movement of the float also opens the glass-in-mercury seal and allows the gas to escape into the upper chamber C.

The entire system is kept evacuated. Operation is started by introducing a slow leak through stopcock S. The atmospheric pressure forces

the mercury up through the tube connecting chamber A with chamber B. This cuts off the gas intake from the mercury diffusion pumps and compresses the gas past the specially designed float valve V into the upper chamber C.

As the mercury passes the point D just above the chamber which houses the float valve, it makes contact with electrode E_1, and, through a Thyratron circuit, starts a mechanical pump. As the pressure in chamber A is reduced the mercury falls slowly, again uncovering the inlet from the mercury diffusion pumps, until electrode E_2 is uncovered. This stops the mechanical pump and the atmospheric leak causes a repetition of the cycle. The Thyratron circuit shown schematically in figure 7 was chosen because it draws only a minute amount of current and minimizes the chance of objectionable sparking.

Figure 6 shows that a ground-glass ball-and-socket joint has been introduced in the tube which connects the lower and middle chambers. This joint serves to eliminate strain on this tube and reduces the danger of breakage. In addition to this joint, it will be noticed that ground-glass joints have been built into the column above and below the upper chamber C. At the conclusion of a bombardment the stopcock above the chamber C can be closed and the residual H^3 in the cyclotron tank and the pumping system can be pumped into the chamber. The stopcock below the chamber can be closed and the entire chamber can be removed from the system and replaced with a similar unit containing He^3. Arrangements have been kept in the form of a side tube attached to the chamber C, where the H^3 capsule can be housed and the gas released into the system at the proper time.

TEST PROCEDURE

Cyclotron Vacuum

The problem of reducing the natural leakage in the cyclotron tank and its auxiliary pumping lines was successfully solved by detailed examination and treatment of the various gaskets and soldered joints. The natural leakage was reduced to less than 0.1 cubic centimeter per minute at 1 atmosphere pressure. Measurements were taken at the exhaust side of the Cenco "100" Hyper-vac mechanical pump which backs the 6-inch oil diffusion pumps in the cyclotron pumping system. This leakage was small enough to enable the mechanical pump, operating alone, to achieve a pressure of 5×10^{-5} millimeter of mercury, as measured on a McLeod gage.

Unsuccessful Experiments Conducted with Steel Toepler Pump

The preliminary experiments conducted with the first design of the steel Toepler pump showed that a number of modifications were needed for successful operation of the unit in a system containing mercury as the working fluid. For example, though stainless steel had been used throughout and each joint had been provided with well-machined surfaces so as not to provide any apertures for mercury to pass through, yet the silver solder used for sealing was badly affected in the course of about 6 weeks. The unit as constructed operated only for a limited number of cycles, after which mercury began to collect in the upper chamber. This was because the cup-and-cone valve system that was used was so smoothly ground and had such a large surface that the cohesive forces keeping the seal tight were considerable. Although the weight and angle of taper of the cone had been carefully considered in the design stage, other factors caused the valve to seat before the bulk of the mercury could drain from the upper chamber. This resulted in an accumulation of mercury there. After a number of cycles there was such a large amount of mercury above the valve that the gas from below could not force the valve open against the superincumbent pressure and the forces of cohesion, and thereby the cycle of operation was stopped. Another defect was that the duration of the cycle was greater than 90 seconds, which is much longer than can be tolerated for efficient evacuation and maintenance of correct pressure for backing the mercury diffusion pumps. The operation of switches, however, was quite good and the over-all design was found to be satisfactory.

The changes that were introduced in the light of the difficulties encountered with the above unit are as follows: All joints previously silver-soldered were remachined and heli-arc welded. The surface of contact of the cone was reduced by machining. A float was attached to the stem of the cone to increase the buoyant forces, thereby facilitating the opening of the valve. Improvement was introduced into the upper switch so that a very small movement of the cone would close the switch by having the movement of the switch magnified through a lever system. The diagram of the final pump is shown in figure 1. However, in order to forestall any further difficulties with regard to the stainless steel used in the construction, and to eliminate the time factor involved in all such constructions, an all-glass Toepler pump was constructed to serve as a stand-by, as described above.

Tests with Mercury Diffusion Pumps

When the mercury diffusion pumps and their auxiliary lines were installed, and the aforementioned leakage was reduced to a minimum consistent with the time and labor involved, the mercury pumps were tested to determine the magnitude of the ultimate vacuum they could achieve in the cyclotron system.

The pumps were tested under varying thermal conditions, both in the water cooling jackets and in the heater units, but unfortunately the best vacuum obtained with two pumps in parallel, backed by a Cenco "20" Hypervac mechanical pump, was on the order of 1×10^{-4} millimeter of mercury. This is roughly between 10 and 100 times higher than the pressure for normal cyclotron operation. In fact, The Ohio State University cyclotron is customarily operated with an initial pressure of less than 10^{-6} millimeter.

Although it was believed that some additional modifications of the then existing system (i.e., the use of larger-diameter tubing and the addition of more pumps) would make it possible to reach the desired pressures, it was deemed expedient in the light of the time and expense these modifications would involve to explore other avenues of approach to the problem. This phase of the project was accordingly terminated.

CONCLUDING REMARKS

With a greater pumping speed than was achieved in the course of this investigation the method described would probably work satisfactorily. Then, with the frequency of the oscillator changed from 10.5 megacycles to 6.7 megacycles, H^3 particles with an energy of 6.5 million electron volts would be expected to become available for use in the cyclotron bombardment experiments.

The Ohio State University Research Foundation
Columbus, Ohio, January 20, 1951

REFERENCES

1. Kundu, D. N., and Pool, M. L.: Results of H^3 Bombardment of Ag Leading to Pd^{109}. Phys. Rev., vol. 72, no. 2, second ser., July 15, 1947, pp. 101-108.

2. Kundu, D. N., and Pool, M. L.: The (H^3,p) Reaction in Rh and Co and Probable Evidence of the Di-Neutron. Phys. Rev., vol. 73, no. 1, second ser., Jan. 1, 1948, pp. 22-26.

3. Kundu, D. N., and Pool, M. L.: Introduction of Two Neutrons into Atomic Nuclei under H^3 Bombardment. Phys. Rev., vol. 73, no. 10, second ser., May 15, 1948, pp. 1220-1221.

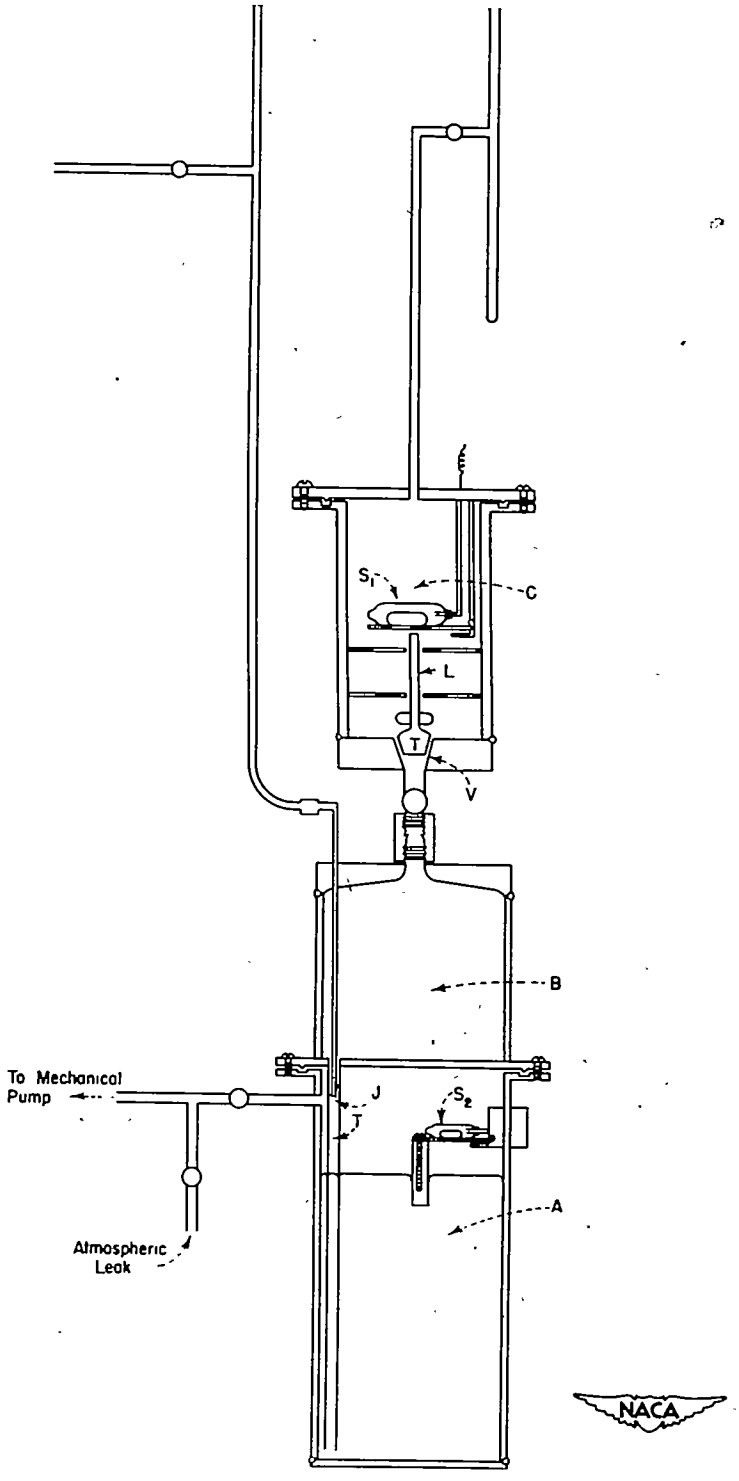

Figure 1.- Stainless-steel Toepler pump. Drawing is 1/4 scale.

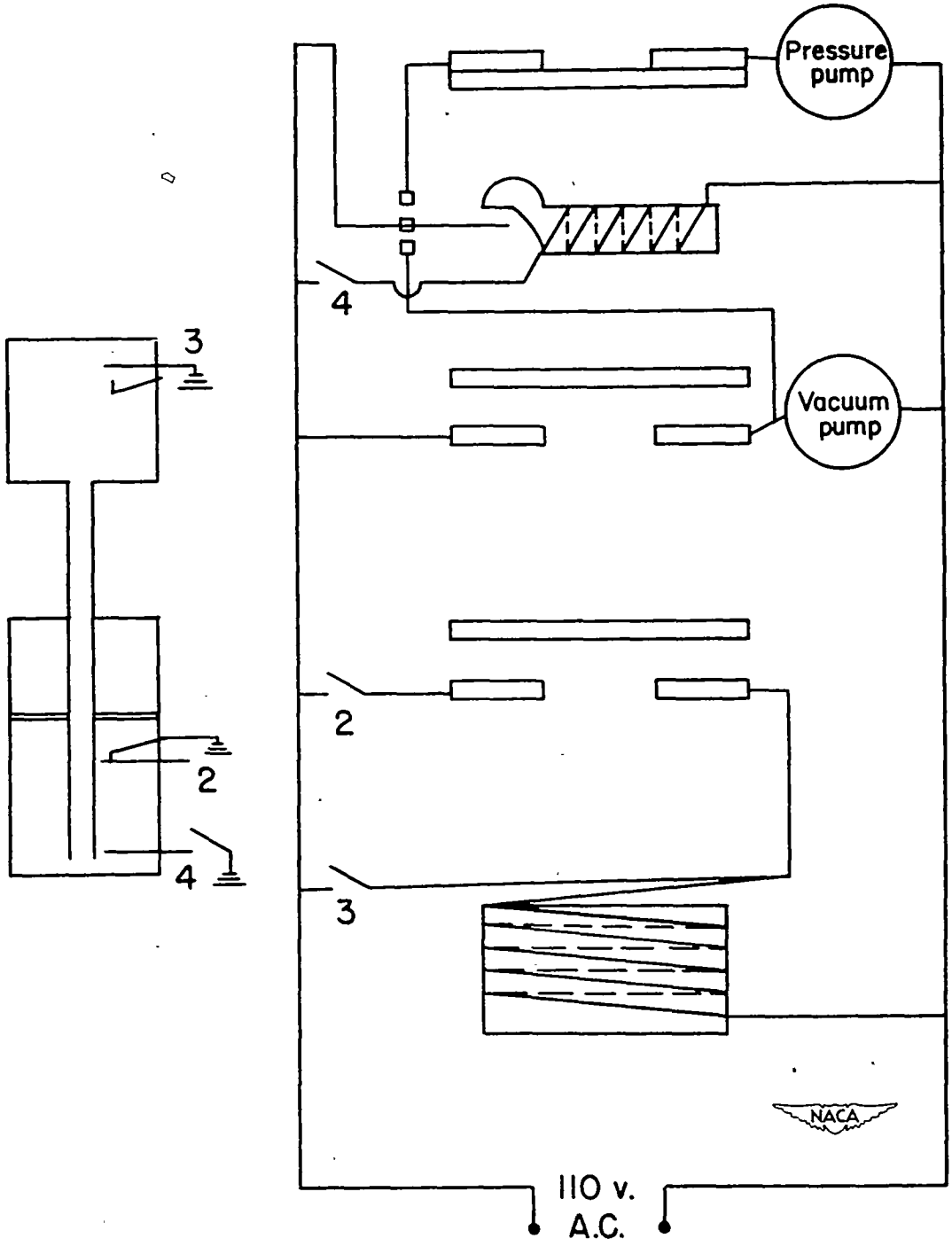

Figure 2.- Electric circuit of stainless-steel Toepler pump.

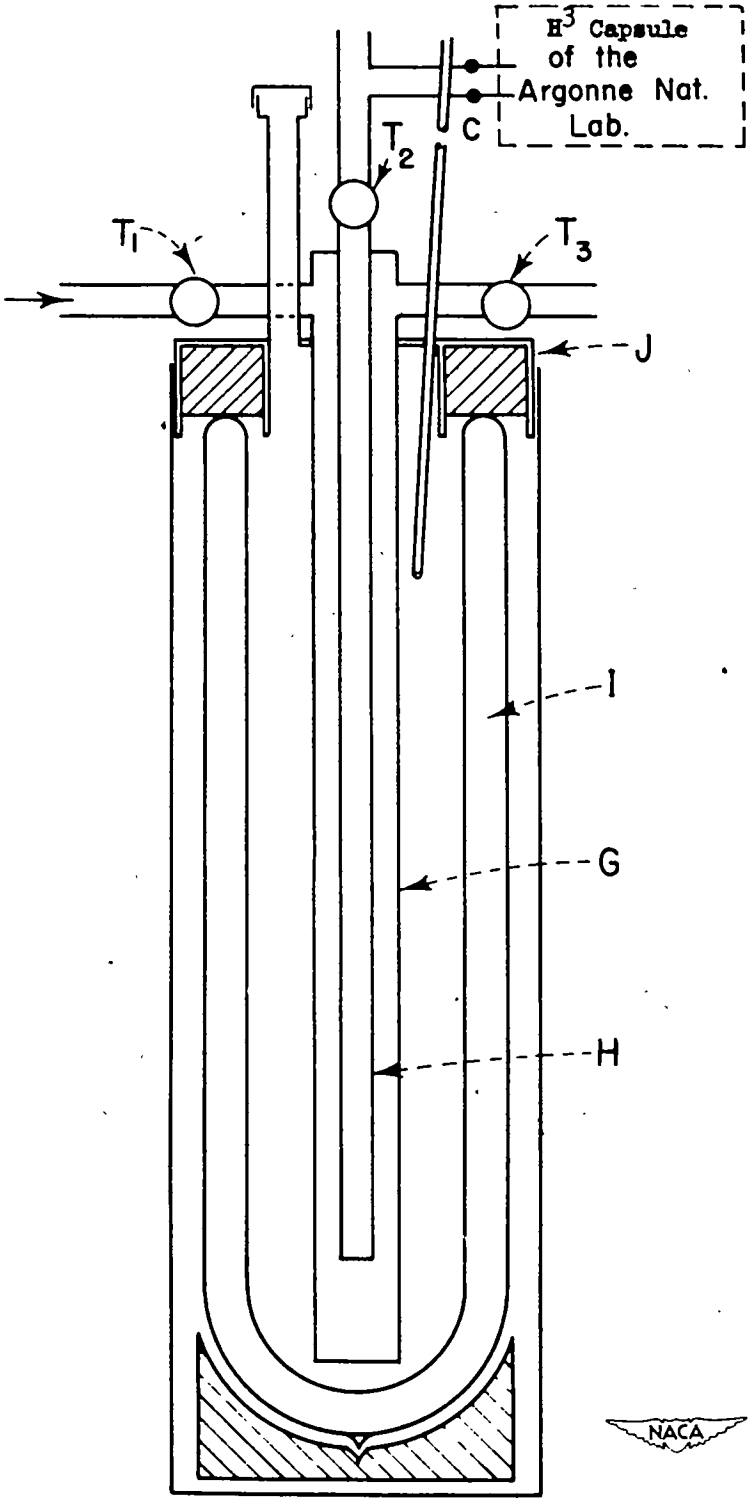

Figure 3.- Liquid-hydrogen trap. Drawing is 1/2 scale.

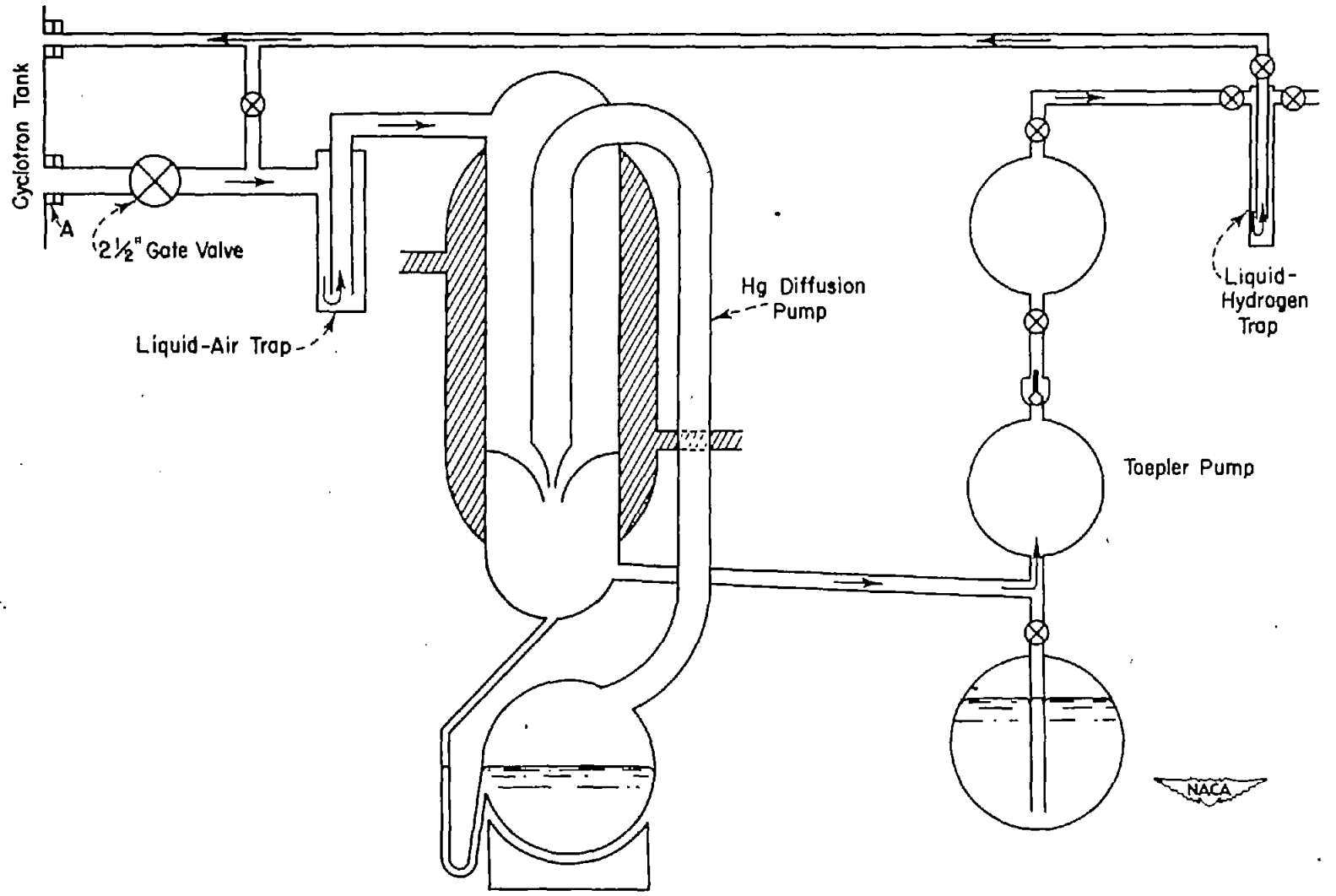

Figure 4.- Schematic diagram of H^3 circulating system.

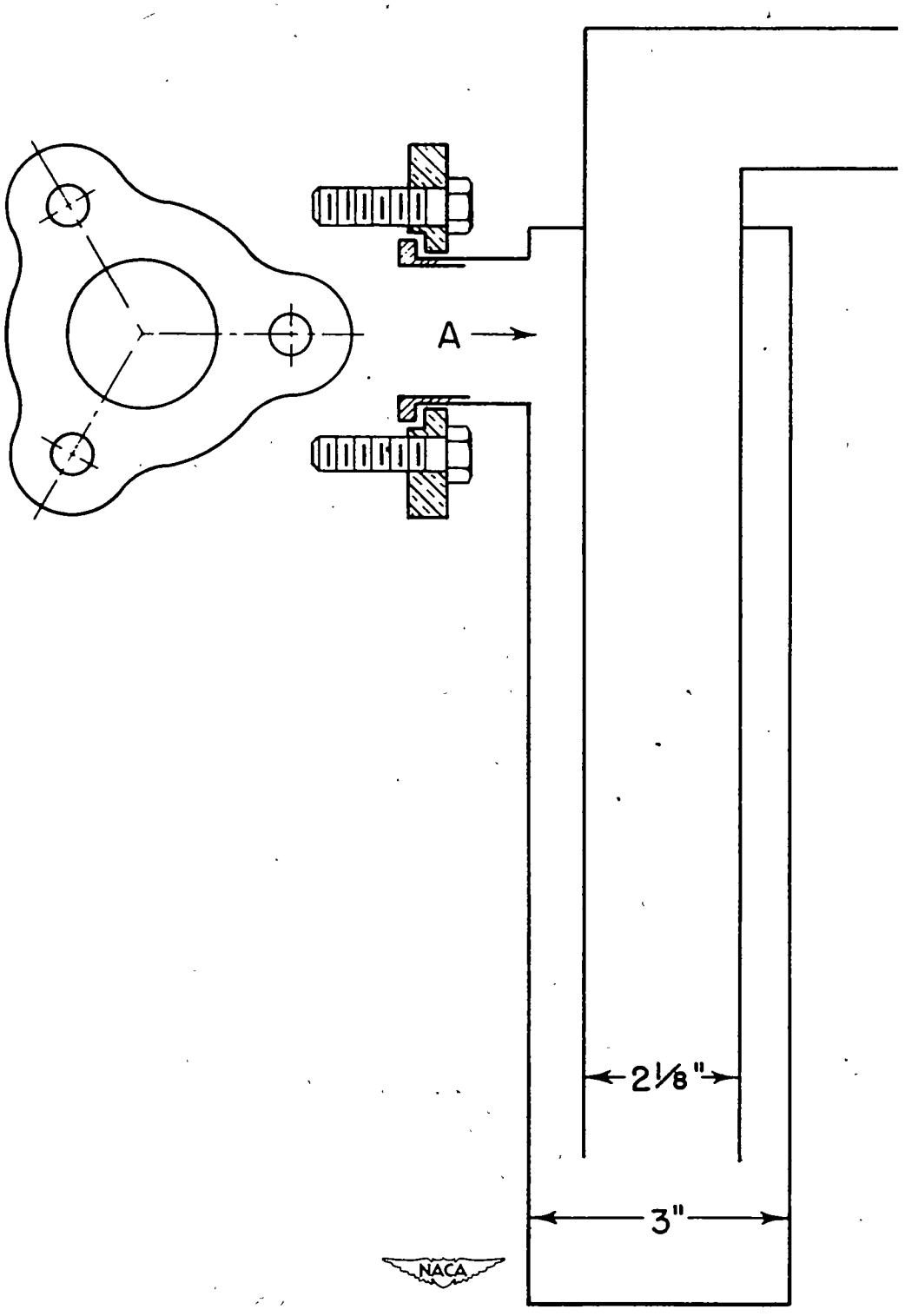

Figure 5.- Liquid-air trap. Sketch is 1/2 scale.

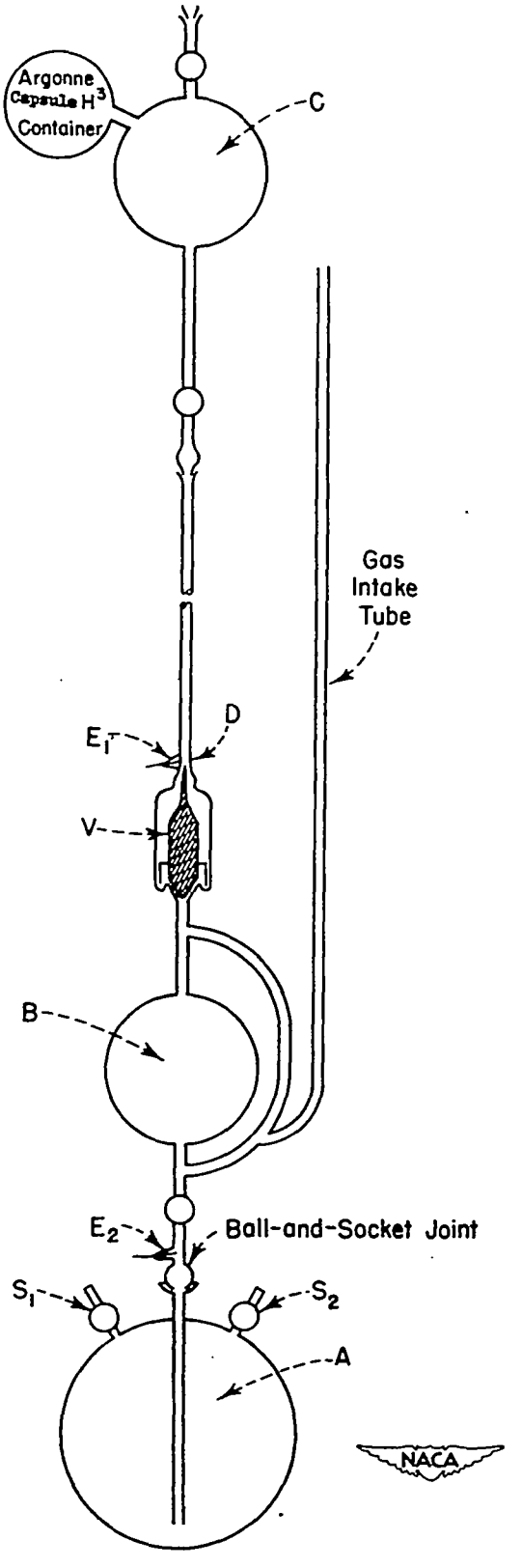

Figure 6.- Glass Toepler pump. Drawing is approximately 1/4 scale.

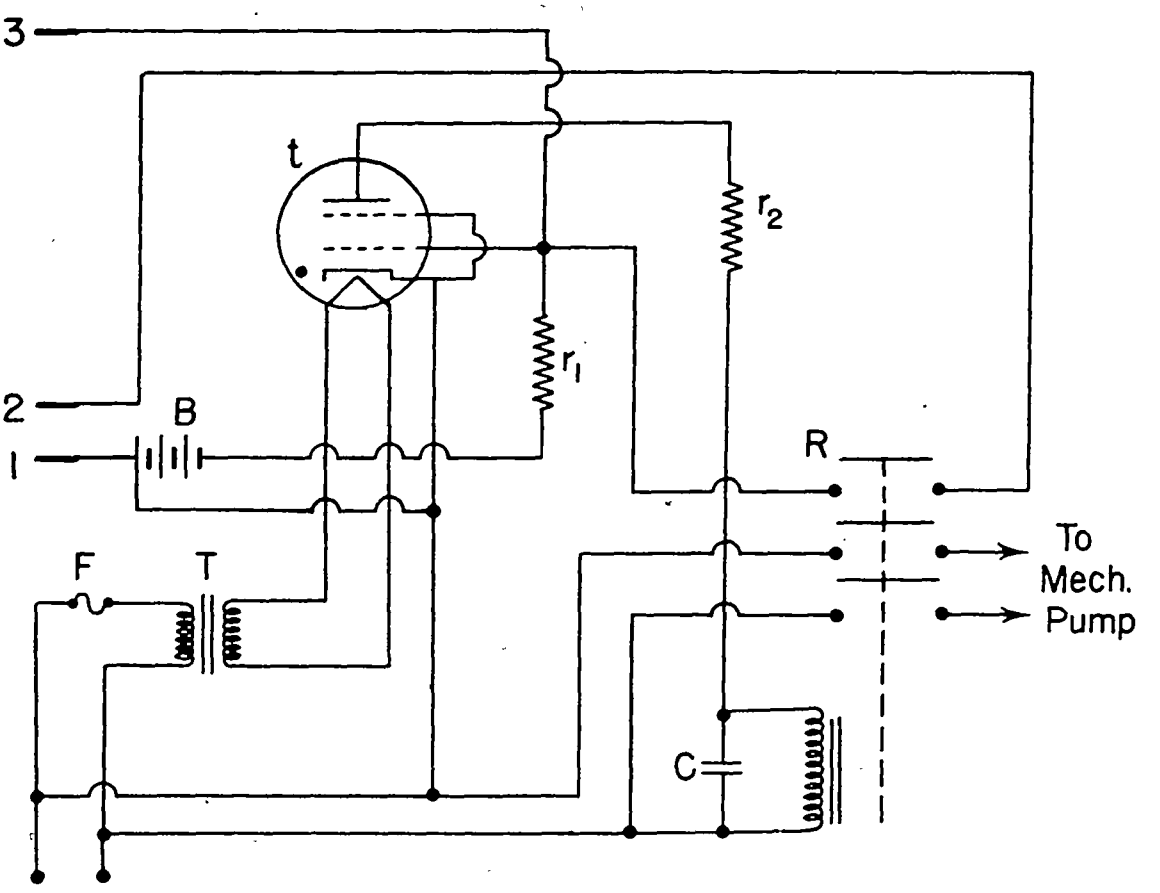

t - 2050
T - 6.3 v. filament transformer
r_1 - 100,000 ohms, 1 w.
r_2 - 100 ohms, 10 w.
B - 6 v. battery
C - 8 μfd condenser
R - TPST relay, 1500-1600 Ω, 50-60 v. D.C.
F - 1 amp. fuse
1,2,3 - Toepler pump electrodes

Figure 7.- Toepler pump Thyratron circuit.

NACA-Langley - 12-19-51 - 1000