NACA TN 2581

TECH LIBRARY KAFB, NM
0065526

# NATIONAL ADVISORY COMMITTEE FOR AERONAUTICS

**TECHNICAL NOTE 2581**

## DEFLECTIONS OF A SIMPLY SUPPORTED RECTANGULAR SANDWICH PLATE SUBJECTED TO TRANSVERSE LOADS

By Kuo Tai Yen, Sadettin Gunturkun,
and Frederick V. Pohle

Polytechnic Institute of Brooklyn

Washington
December 1951

AFMDC
TECHNICAL LIBRARY
AFL 2811

TECH LIBRARY KAFB, NM
0065526

1N

NATIONAL ADVISORY COMMITTEE FOR AERONAUTICS

TECHNICAL NOTE 2581

# DEFLECTIONS OF A SIMPLY SUPPORTED RECTANGULAR SANDWICH PLATE SUBJECTED TO TRANSVERSE LOADS

By Kuo Tai Yen, Sadettin Gunturkun,
and Frederick V. Pohle

## SUMMARY

The differential equations of the bending of sandwich plates were integrated to obtain the deflections when the four edges of the plate are simply supported and the loading consists of either a uniformly distributed transverse load or a concentrated load applied at the center of the panel. The deflection patterns are shown in diagrams and the maximum deflection of the plate is presented in a number of graphs.

## INTRODUCTION

A sandwich plate is a composite plate consisting of two thin faces and a thick core. In airplane construction the faces are usually composed of aluminum alloy, and the core is composed of some lightweight material such as an expanded plastic or balsa wood. In the latter case, the fibers of the wood are usually arranged perpendicular to the plane of the plate. Since the modulus of elasticity of the core is of the order of magnitude of one-thousandth that of the faces, the normal stresses in the core are of little importance in resisting bending moments, although the usual ratio of face thickness to core thickness lies between one-tenth and one-hundredth. The core performs a task in transmitting shear forces and undergoes considerable shearing deformations because its modulus of shear is low, and therefore shearing deformations cannot be disregarded in the analysis of sandwich plates.

Differential equations have been derived for rectangular sandwich plates subjected to transverse and edgewise loading (reference 1). In the present report the differential equations are integrated for the case when all four edges of the plate are simply supported, and when the load is either concentrated at the center or uniformly distributed over the entire plate. The maximum deflection depends upon the thickness ratio $r = c/t$ and upon a nondimensional parameter $R$. Numerical values of the deflections of a square sandwich plate were calculated for

a great number of values of these two parameters, and the results of the computations are presented in the form of diagrams.

The calculations presented here were carried out under the sponsorship and with the financial assistance of the National Advisory Committee for Aeronautics. The authors are indebted to Doctors N. J. Hoff and V. L. Salerno for their advice in the course of the calculations and for their help in preparing the final report, and to Mr. George Booth for his work in carrying out the calculations and in checking the analysis.

## SYMBOLS

| | |
|---|---|
| $B_c$ | deflection factor for sandwich plate under concentrated load |
| $B_d$ | deflection factor for sandwich plate under uniformly distributed load |
| $c$ | thickness of core, inches |
| $D$ | bending rigidity of thin plate, pound-inches squared per inch |
| $D_f$ | bending rigidity of two independent faces, pound-inches squared per inch |
| $D_o$ | bending rigidity of sandwich plate, pound-inches squared per inch |
| $E$ | Young's modulus of face, psi |
| $F$ | form factor for sandwich plate |
| $G_c$ | shear modulus of core, psi |
| $k$ | side ratio $(L_x/L_y)$ |
| $L_x$ | side length of sandwich plate in x-direction, inches |
| $L_y$ | side length of sandwich plate in y-direction, inches |
| $P$ | concentrated load, pounds |
| $P_x$ | compressive end load in x-direction, pounds per inch |
| $P_y$ | compressive end load in y-direction, pounds per inch |

| | |
|---|---|
| $q$ | distributed load, psi |
| $q_o$ | intensity of uniformly distributed load |
| $r = c/t$ | |
| $R$ | stiffness factor for sandwich plate |
| $t$ | thickness of face, inches |
| $u$ | displacement in x-direction, inches |
| $v$ | displacement in y-direction, inches |
| $w$ | deflection in z-direction, inches |
| $x,y$ | rectangular coordinates in plane of faces, inches |
| $z$ | rectangular coordinate perpendicular to plane of faces, inches |
| $\mu$ | Poisson's ratio |
| $\Delta^2$ | Laplace operator |

## DERIVATION OF EXPRESSIONS FOR DEFLECTIONS

The differential equations for the deflections of a sandwich plate have been derived previously (reference 1), and the problem has been defined by means of the following three partial differential equations

$$D_o\left[2u_{xx} + (1 - \mu)u_{yy} + (1 + \mu)v_{xy}\right] - 2G_c cu - 2G_c c\,\frac{c + t}{2}\,w_x = 0 \qquad (1a)$$

$$D_o\left[2v_{yy} + (1 - \mu)v_{xx} + (1 + \mu)u_{xy}\right] - 2G_c cv - 2G_c c\,\frac{c + t}{2}\,w_y = 0 \qquad (1b)$$

$$D_f\,\Delta^4 w - G_c c\,\frac{2}{c + t}\left(u_x + v_y\right) - G_c c\,\Delta^2 w - q + P_x w_{xx} + P_y w_{yy} = 0 \qquad (1c)$$

together with the following boundary conditions:

$$u_x + \mu v_y = 0 \qquad \text{when} \quad x = 0,\ L_x \qquad (2a)$$

$$v_y + \mu u_x = 0 \qquad \text{when} \quad y = 0,\ L_y \tag{2b}$$

$$u = 0 \qquad \text{when} \quad y = 0,\ L_y \tag{2c}$$

$$v = 0 \qquad \text{when} \quad x = 0,\ L_x \tag{2d}$$

$$w_{xx} = 0 \qquad \text{when} \quad x = 0,\ L_x \tag{2e}$$

$$w_{yy} = 0 \qquad \text{when} \quad y = 0,\ L_y \tag{2f}$$

$$w = 0 \qquad \text{when} \quad x = 0,\ L_x \quad \text{and when} \quad y = 0,\ L_y \tag{2g}$$

The symbols denoting bending rigidities were defined in the following manner:

$$D_o = Et(c + t)^2 \Big/ \left[2\left(1 - \mu^2\right)\right] \tag{3a}$$

$$D_f = Et^3 \Big/ \left[6\left(1 - \mu^2\right)\right] \tag{3b}$$

where $D_f$ is the bending rigidity per inch of the faces about their own centroidal axes, calculated for the two faces. Also, $D_o$ is the bending rigidity of 1-inch width of the sandwich panel calculated about the centroidal axis of the sandwich, when the contribution of the core, as well as that represented by $D_f$, is neglected.

The other symbols, as well as the sign convention, are shown in figure 1. It should be mentioned that the sign of the last term in equations (1a) and (1b) and that of the second term in equation (1c) are opposed to those in reference 1 because of the different choice of the coordinate systems. A single sixth-order differential equation can be obtained from the above three differential equations by elimination of $u$ and $v$ (reference 1):

$$D_f\ \Delta^6 w - \left(D_o + D_f\right)\left(G_c c/D_o\right)\Delta^4 w = \left[\Delta^2 - \left(G_c c/D_o\right)\right]\left(q - P_x w_{xx} - P_y w_{yy}\right) \tag{4}$$

where

$$\Delta^6 = \left(\partial^6/\partial x^6\right) + 3\left(\partial^6/\partial x^4 \partial y^2\right) + 3\left(\partial^6/\partial x^2 \partial y^4\right) + \left(\partial^6/\partial y^6\right) \tag{4a}$$

This problem will be solved by the method of Fourier series expansion. The deflection $w$ can be represented by a double Fourier sine series:

$$w = \sum_{m}^{\infty} \sum_{n}^{\infty} w_{mn} \sin\left(m\pi x/L_x\right) \sin\left(n\pi y/L_y\right) \tag{5}$$

which satisfies all the boundary conditions (2e) to (2g). Assumption of the other two deflections in the form

$$u = \sum_{m}^{\infty} \sum_{n}^{\infty} u_{mn} \cos\left(m\pi x/L_x\right) \sin\left(n\pi y/L_y\right) \tag{6a}$$

and

$$v = \sum_{m}^{\infty} \sum_{n}^{\infty} v_{mn} \sin\left(m\pi x/L_x\right) \cos\left(n\pi y/L_y\right) \tag{6b}$$

satisfies all the remaining boundary conditions (equations (2)). Equation (2d) implies $v_y = 0$ on $x = 0$ and $x = L_x$, and equation (2a) then reduces to $u_x = 0$ on the edges $x = 0$ and $x = L_x$. Likewise, equation (2c) implies $u_x = 0$ on $y = 0$ and $y = L_y$, and equation (2b) then reduces to $v_y = 0$ on the edges $y = 0$ and $y = L_y$. If $q$ is expressed by means of the Fourier sine series

$$q = \sum_{m}^{\infty} \sum_{n}^{\infty} q_{mn} \sin\left(m\pi x/L_x\right) \sin\left(n\pi y/L_y\right) \tag{7}$$

where the $q_{mn}$ can be calculated from the well-known formula

$$q_{mn} = \left(4/L_x L_y\right) \int_0^{L_y} \int_0^{L_x} q \sin\left(m\pi x/L_x\right) \sin\left(n\pi y/L_y\right) dx\, dy \tag{8}$$

then the Fourier coefficients $u_{mn}$, $v_{mn}$, and $w_{mn}$ can be determined from the algebraic equations obtained by substituting $u$, $v$, $w$, and $q$ into equations (1a), (1b), and (1c). The knowledge of the coefficients $u_{mn}$ and $v_{mn}$ is not needed when the transverse deflection of the face plate is sought. Therefore, it was found more convenient to solve the problem by means of the sixth-order differential equation

(equation (4)). Substitution of $q$ from equation (7) and $w$ from equation (5) into equation (4) yields:

$$w_{mn} = \left(B_c/G_c c\right)\left[\left(\frac{m\pi}{L_x}\right)^2 + \left(\frac{n\pi}{L_y}\right)^2 + 1\right]\left(q_{mn}/K_{mn}\right) \tag{9}$$

where the denominator is given by

$$K_{mn} = \left[\left(\frac{m\pi}{L_x}\right)^2 + \left(\frac{n\pi}{L_y}\right)^2\right]^3 \left(\frac{D_o D_f}{G_c c}\right) + \left[\left(\frac{m\pi}{L_x}\right)^2 + \left(\frac{n\pi}{L_y}\right)^2\right]^2 \left(D_o + D_f\right) -$$

$$P_x\left\{\left(\frac{D_o}{G_c c}\right)\left[\left(\frac{m\pi}{L_x}\right)^4 + \left(\frac{m\pi}{L_x}\right)^2\left(\frac{n\pi}{L_y}\right)^2\right] + \left(\frac{m\pi}{L_x}\right)^2\right\} - P_y\left\{\left(\frac{D_o}{G_c c}\right)\left[\left(\frac{n\pi}{L_y}\right)^4 + \right.\right.$$

$$\left.\left.\left(\frac{n\pi}{L_y}\right)^2\left(\frac{m\pi}{L_x}\right)^2\right] + \left(\frac{n\pi}{L_y}\right)^2\right\}$$

In the present solution of the problem, the compressive end loads $P_x$ and $P_y$ will be assumed to be zero. With the introduction of the following notations

$$k = L_x/L_y \tag{10a}$$

$$r = c/t \tag{10b}$$

$$D = Et^3/\left[12(1 - \mu^2)\right] \tag{10c}$$

$$R = G_c t L_x^2/\pi^2 D \tag{10d}$$

the deflection coefficients (equation (9)) can be written in the following nondimensional form:

$$w_{mn} = C_{mn}\left(L_x^4/D\right)q_{mn} \tag{11}$$

where

$$C_{mn} = \left(1/2\pi^4\right)\left\{\left[6(1 + r)^2/rR\right]\left(m^2 + n^2k^2\right) + 1\right\}\Big/K_{mn}{}^{o} \tag{11a}$$

and

$$K_{mn}{}^{o} = \left[6(1 + r)^2/rR\right]\left(m^2 + n^2k^2\right)^3 + \left[3(1 + r)^2 + 1\right]\left(m^2 + n^2k^2\right)^2 \tag{11b}$$

The maximum deflection occurs at the center of plate. Substitution of $x = L_x/2$ and $y = L_y/2$ into equation (5) yields

$$w_{max} = \sum_{m=1,3,\cdots}^{\infty} \sum_{n=1,3,\cdots}^{\infty} w_{mn}(-1)^{1+\left[(m+n)/2\right]} \tag{12}$$

where $w_{mn}$ is given by equation (11).

## UNIFORMLY DISTRIBUTED LOAD

When the load is uniformly distributed over the plate, the coefficients of the Fourier series given by equation (7) can be calculated as

$$q_{mn} = \left(4q_o/L_xL_y\right)\int_0^{L_y}\int_0^{L_x} \sin\left(m\pi x/L_x\right) \sin\left(n\pi y/L_y\right) dx\, dy$$

$$= \left(16q_o/\pi^2 mn\right) \tag{13}$$

where $q_o$ is the intensity of the uniformly distributed load.

Substitution of these coefficients into equation (11) and introduction of the notation

$$B_d = q_oL_x{}^4/D \tag{14}$$

yield the following expression for the nondimensional deflection parameter:

$$\left(w/B_d\right) = \left(16/\pi^2\right) \sum_{m=1,3,\cdots}^{\infty} \sum_{n=1,3,\cdots}^{\infty} \left(C_{mn}/mn\right) \sin\left(m\pi x/L_x\right) \sin\left(n\pi y/L_y\right) \tag{15}$$

The maximum deflection parameter $w_{max}/B_d$ can be written as

$$\left(w_{max}/B_d\right) = \left(16/\pi^2\right) \sum_{m=1,3,\cdots}^{\infty} \sum_{n=1,3,\cdots}^{\infty} \left(C_{mn}/mn\right) (-1)^{1+\left[(m+n)/2\right]} \tag{16}$$

The maximum deflection can be calculated from the rapidly convergent series (16).

If $c$ or $G_c$ approaches zero, the maximum deflection is reduced to:

$$w_{max} = \left(8q_o/\pi^6 D\right) \sum_{m=1,3,\cdots}^{\infty} \sum_{n=1,3,\cdots}^{\infty} \frac{(-1)^{1+\left[(m+n)/2\right]}}{mn\left[\left(m/L_x\right)^2 + \left(n/L_y\right)^2\right]^2} \tag{17}$$

This is the formula for the maximum deflection of a simply supported thin plate under the uniformly distributed load $q_o/2$, as given in reference 2. In the limiting case of no shear deformation in the core (infinite $G_c$), the maximum deflection is given by equation (17), with $D$ replaced by $DF$. The form factor for the sandwich plate is $F = 1 + 3(1 + c/t)$. The quantity $DF$ represents the total moment of inertia of the two faces with respect to the center plane of the sandwich plate.

Deflections of sandwich plates under uniformly distributed load are shown in figures 2 to 4.

## CONCENTRATED LOAD

In the case of a concentrated load $P$ acting at the center of the sandwich plate, the Fourier coefficients $q_{mn}$ in equation (7) are obtained by a limiting process. Let $p$ be the intensity of the load uniformly distributed over a small square with sides $a$ parallel to those of the plate, and with its center at the center of the plate. Set $P = pa^2$. Then according to equation (8),

$$q_{mn} = \left(4/L_xL_y\right) \int_{\frac{L_x-a}{2}}^{\frac{L_x+a}{2}} \int_{\frac{L_y-a}{2}}^{\frac{L_y+a}{2}} \left(P/a^2\right) \sin\left(m\pi x/L_x\right) \sin\left(n\pi y/L_y\right) dx\, dy$$

If this expression is integrated and the quantity $a$ is allowed to approach zero while $P = pa^2$ is kept constant, $q_{mn} = \left(4P/L_xL_y\right)(-1)^{1+\left[(m+n)/2\right]}$ when $m$ and $n$ are odd, and $q_{mn} = 0$ when $m$ and $n$ are even.

With the notations used before, and with

$$B_c = PL_x^2/D \tag{18}$$

the deflection can be expressed in the following nondimensional form:

$$\left(w/B_c\right) = 4k \sum_{m=1,3,\cdots}^{\infty} \sum_{n=1,3,\cdots}^{\infty} C_{mn}(-1)^{1+\left[(m+n)/2\right]} \sin\left(m\pi x/L_x\right) \sin\left(n\pi y/L_y\right) \tag{19}$$

The maximum deflection is then given by

$$\left(w_{max}/B_c\right) = 4k \sum_{m=1,3,\cdots}^{\infty} \sum_{n=1,3,\cdots}^{\infty} C_{mn} \tag{20}$$

where $C_{mn}$ is defined by equation (11a).

In equation (20) if either $c$ or $G_c$ approaches zero, the maximum deflection reduces to that of two thin plates with no core (reference 2), namely:

$$\left(w/B_c\right) = \left(2R/\pi^4\right) \sum_{m=1,3,\cdots}^{\infty} \sum_{n=1,3,\cdots}^{\infty} \frac{1}{\left(m^2 + n^2k^2\right)^2} \tag{21}$$

It is shown in equation (A8) of the appendix that the value of the double series for a square plate $(k = 1)$ is

$$\sum_{m=1,3,\cdots}^{\infty} \sum_{n=1,3,\cdots}^{\infty} \frac{1}{\left(m^2 + n^2\right)^2} = 0.28251 \cdots \tag{21a}$$

Therefore the maximum deflection of the two thin square plates with no core is

$$\begin{aligned}\left(w_{max}/B_c\right) &= 5.80042 \times 10^{-3} \\ &= \alpha\end{aligned} \tag{21b}$$

For a square sandwich plate the expression for the maximum deflection given by equation (20) may be transformed as follows:

$$\begin{aligned}\left(w_{max}/B_c\right) &= \alpha + 4 \sum_{m=1,3,\cdots}^{\infty} \sum_{n=1,3,\cdots}^{\infty} C_{mn} - \alpha \\ &= \alpha + 4 \sum_{m=1,3,\cdots}^{\infty} \sum_{n=1,3,\cdots}^{\infty} C_{mn} - \\ &\quad \left(2/\pi^4\right) \sum_{m=1,3,\cdots}^{\infty} \sum_{n=1,3,\cdots}^{\infty} \frac{1}{\left(m^2 + n^2k^2\right)}\end{aligned} \tag{22}$$

$$\left(w_{max}/B_c\right) = 5.80042 \times 10^{-3} -$$

$$\left(rR/\pi^4\right) \sum_{m=1,3,\cdots}^{\infty} \sum_{n=1,3,\cdots}^{\infty} \frac{1}{\left(m^2+n^2\right)^2 \left\{m^2+n^2+(rR/2)+\left[rR/6(1+r)^2\right]\right\}} \tag{23}$$

For a square sandwich plate with an infinitely rigid core (i.e., $R \longrightarrow \infty$) the maximum deflection, obtained from equation (20), is:

$$\left(w_{max}/B_c\right) = \left(2/\pi^4\right) \sum_{m=1,3,\cdots}^{\infty} \sum_{n=1,3,\cdots}^{\infty} \frac{1}{\left(m^2+n^2\right)^2 \left[3(1+r)^2+1\right]}$$

$$= (\alpha/F) \tag{24}$$

where

$$F = 3(1+r)^2 + 1 \tag{24a}$$

is the form factor of the sandwich plate.

Another expression for the maximum deflection of a square sandwich plate may be obtained from equation (20):

$$\left(w_{max}/B_c\right) = (\alpha/F) + 4 \sum_{m=1,3,\cdots}^{\infty} \sum_{n=1,3,\cdots}^{\infty} -(\alpha/F)$$

$$= 5.80042 \times \left(10^{-3}/F\right) + \left(2/\pi^4\right)\left[(F-1)/F\right] \times$$

$$\sum_{m=1,3,\cdots}^{\infty} \sum_{n=1,3,\cdots}^{\infty} \frac{1}{\left(m^2+n^2\right)\left\{m^2+n^2+(rR/2)+\left[rR/6(1+r)^2\right]\right\}} \tag{25}$$

Equations (23) and (25) are alternate expressions for the deflection at the center of the sandwich plate. Since the series involved are sums of positive constants, the following inequality holds:

$$\alpha > w_{max}/B_c > \alpha/F \tag{26}$$

This means that the deflection of a sandwich plate is bounded by two limiting cases: It is smaller than that of a sandwich plate with a core having no shearing resistance and is greater than the deflection of a sandwich plate with a core of infinite shearing resistance.

Equation (23) can be used for values of $R < 1$ and $r < 50$ since the convergence of the series is sufficiently rapid for these values. This series was used to obtain portions of figure 5. For large values of $R$ the convergence of both series in equations (20) and (23) was too slow to permit direct use. Because of its simpler algebraic form, the series of equation (25) was evaluated as shown in the appendix. The series (A12), in conjunction with other modifications given in the appendix, was used to obtain figure 6.

## PRESENTATION OF RESULTS

The equations derived in the preceding section have been used to compute the deflections of various square sandwich plates subjected to uniformly distributed loads or to a concentrated normal load acting at the center of the plate.

The series solution equation (15) was used to obtain the maximum deflection of a square sandwich plate supporting a uniformly distributed load. The deflections for a square sandwich plate at $y = L_y/2$ and for different values of $x/L_x$ have been obtained for $R = 800$ and different values of $r$. These are plotted in figure 2, which shows the deformation pattern for the sandwich plate. The maximum deflection for a sandwich plate with prescribed values of $r$ and $R$ is shown in figure 3. In figure 4, the maximum deflection for values of $R$ from 0 to 1 is plotted. As $R$ approaches zero, the deflections approach the value for a sandwich plate without shearing deformation, that is, $w_{max}/B_d = 2.029 \times 10^{-3}$ inches. Hence the curves of figure 4 show the effect of the core upon the maximum deflection of a sandwich plate.

For a square sandwich plate with a concentrated load at the center, the maximum deflection for small values of $R$ is plotted in figure 5. In figure 6 the maximum deflection for large values of $R$ is plotted.

In both the uniformly distributed and the concentrated-load cases, as $R$ approaches infinity the deflections approach the asymptotic values of a sandwich plate without shear deformation. The limiting values for a square plate are given in figures 3 and 6 for these two cases, respectively.

With the aid of figures 3 and 6, the maximum deflections of a square sandwich plate can be calculated. The value of $w_{max}/B_d$ may be read off from the curves of figure 3 for appropriate values of $r$ and for values of $R$ less than 1000. If $R$ exceeds 1000, figure 3 serves to obtain only an approximation to the value of $w_{max}/B_d$. In such cases only three terms of equation (15) are needed to obtain $w_{max}/B_d$ accurately, and in most applications the first term of equation (15) would be adequate. For values of $R$ less than 1000 the graphs of figure 3 are particularly valuable since in this range many more terms of equation (15) would be required to calculate $w_{max}/B_d$ accurately.

## COMPARISON WITH EXPERIMENT

The calculated values of the maximum deflection under uniform loading have been compared with the test results obtained by the Forest Products Laboratory (reference 3, table I). The results calculated from the present report for a uniformly distributed load are in good agreement with these test results, although of slightly smaller value in 23 of 30 cases. This behavior is to be expected since the theoretical boundary conditions correspond to a greater degree of constraint along the edges than do the experimental boundary conditions. Theoretically, both faces must be simply supported; experimentally, only one face was simply supported on knife edges.

This comparison is shown in tables I, II, and III. The average absolute errors are 4.7, 4.9, and 6.5 percent, respectively. In 18 of 30 cases the absolute error is less than 5 percent; in one-third of the cases the absolute error is less than 3 percent. The four largest percentage errors occurred for the case in which the core was composed of corrugated paper honeycomb.

## NUMERICAL EXAMPLE

The following examples show how to find the maximum deflection of a simply supported square sandwich plate by means of figures 3 and 6.

Given:

$$L_x = L_y = 10 \text{ inches}$$

$$c = 0.65 \text{ inch}$$

$$t = 0.025 \text{ inch}$$

$$E = 10.5 \times 10^6 \text{ psi}$$

$$\mu = 0.3$$

$$G_c = 6000 \text{ psi}$$

First calculate the following parameters from equations (10b), (10c), and (10d):

$$r = c/t = 26$$

$$D = Et^3/12\left(1 - \mu^2\right) = 15.0$$

$$R = G_c t L_x^2/\pi^2 D = 101$$

Uniformly Distributed Load

For the uniformly distributed load, from figure 3,

$$\left(w_{max}/B_d\right) = 3.9 \times 10^{-6}$$

For a uniformly distributed load of intensity $q_o = 1$ psi the value of $B_d$ according to equation (14) is

$$B_d = q_o L_x^4/D = 667$$

Hence the maximum deflection is

$$w_{max} = 0.00260 \text{ inch}$$

### Concentrated Load at Center of Plate

Consider the concentrated load equal to the total uniformly distributed load in the section above:

$$P = q_o L_x^2 = 100$$

$$B_c = PL_x^2/D$$

$$= B_d$$

$$= 667$$

From figure 6

$$\left(w_{max}/B_c\right) = 28 \times 10^{-6}$$

Hence the maximum deflection is

$$w_{max} = 0.0187 \text{ inch}$$

## CONCLUDING REMARKS

The deflections of a square sandwich panel were calculated for the case where all four edges are simply supported and the external loading is either a uniformly distributed transverse load or a concentrated transverse load applied at the center of the plate. Diagrams are presented which show the pattern of deflections for these cases. The main results of the calculations are the graphs from which the maximum deflection of the sandwich plate can be read as a function of two nondimensional parameters.

The faces were assumed to be isotropic thin plates. The distance between the faces was assumed to remain unchanged during the deformations, and the contribution of the core to the bending rigidity of the entire plate was neglected. Theoretical as well as experimental considerations have shown that these assumptions give satisfactory results for sandwich plates of the types in use today in the United States.

Satisfactory agreement with the experimental results of the Forest Products Laboratory was obtained.

# APPENDIX

## ON EVALUATION OF DOUBLE SERIES S(a,b)

### Introduction

The equation for the double series S(a,b) is:

$$S(a,b) = \sum_{m=1,3,\cdots}^{\infty} \sum_{n=1,3,\cdots}^{\infty} 1\Big/\left[\left(m^2 + n^2 + a^2\right)\left(m^2 + n^2 + b^2\right)\right] \tag{A1}$$

The value of the series S(a,0) was required to a high degree of accuracy in order to evaluate the deflection equation (25) developed in the body of this report. The main set of values considered for $a^2$ ranged from 200 to 40,000 (b = 0). In addition, the special value a = 0, b = 0 had to be considered. This latter case S(0,0) was treated separately.

Direct summation of a finite number of terms of equation (A1) does not yield the required six-figure accuracy in a reasonable time, particularly for the larger values of a (b = 0). Methods were developed to determine S(a,b) quickly to any degree of accuracy.

### Evaluation of S(0,0)

For the case a = 0, b = 0, equation (A1) becomes

$$S(0,0) = \sum_{m=1,3,\cdots}^{\infty} \sum_{n=1,3,\cdots}^{\infty} 1\Big/\left(m^2 + n^2\right)^2 \tag{A2}$$

The series (A2) can be summed explicitly by rows by using the partial-fraction expansion of the hyperbolic tangent (reference 4, p. 362):

$$\sum_{n=1,3,\cdots}^{\infty} 1\Big/\left(n^2 + \vartheta^2\right) = \left(\pi/4\vartheta\right) \tanh\left(\pi\vartheta/2\right) \tag{A3}$$

Differentiating both sides of equation (A3) with respect to $\vartheta$ and replacing $\vartheta$ by $m$ in the result lead to

$$\sum_{n=1,3,\cdots}^{\infty} 1/\left(m^2 + n^2\right)^2 = \left(\pi/8m^3\right)\left[\tanh\left(\pi m/2\right) - \left(\pi m/2\right)\operatorname{sech}^2\left(\pi m/2\right)\right] \tag{A4}$$

The result (A4) permits the summation with respect to $n$ to be carried out in equation (A2); $S(0,0)$ may now be written as the single series

$$S(0,0) = (\pi/8) \sum_{m=1,3,\cdots}^{\infty} \left(1/m^3\right)\left[\tanh\left(\pi m/2\right) - \left(\pi m/2\right)\operatorname{sech}^2\left(\pi m/2\right)\right] \tag{A5}$$

It would be difficult to treat equation (A5) explicitly in the form shown, but the evaluation can be simplified if the dependence of the hyperbolic functions upon $m$ is considered.

For example, with $m = 7$,

$$\left.\begin{aligned} \tanh\left(7\pi/2\right) &= 1 - 6.74 \times 10^{-9} \\ \operatorname{sech}^2\left(7\pi/2\right) &= 1.35 \times 10^{-8} \end{aligned}\right\} \tag{A6}$$

If $m > 7$, then $1 - \tanh\left(\pi m/2\right)$ and $\operatorname{sech}^2\left(\pi m/2\right)$ approach zero even more rapidly. For the accuracy required this shows that $\tanh\left(\pi m/2\right)$ may be set equal to unity and $\operatorname{sech}^2\left(\pi m/2\right)$ may be set equal to zero for $m \geqq 7$. This simplifies the form of equation (A5). If the series

$$S' = \sum_{m=1,3,\cdots}^{\infty} 1/m^3 \tag{A7}$$

can be evaluated, this value can be used to determine equation (A5) to any degree of accuracy, for only the first three terms of equation (A7), multiplied by $\pi/8$, need be subtracted. To this value must be added the first three terms of equation (A5). The result will be $S(0,0)$ to six significant figures.

The series (A7) must be calculated directly. It is possible to transform series (A7) into a rapidly convergent series (reference 5, p. 272), from which $S'$ may be determined to be

$$S' = 1.051\ 799\ 8 \cdots$$

The value of $S(0,0)$ may now be determined:

$$S(0,0) = 0.282\ 51 \cdots \tag{A8}$$

Evaluation of $S(a,0)$; $(b = 0)$

Equation (A1) may be written in the form

$$S(a,0) = \left(1/a^2\right) \sum_{m=1,3,\cdots}^{\infty} \sum_{n=1,3,\cdots}^{\infty} \left[1/\left(m^2 + n^2\right) - 1/\left(m^2 + n^2 + a^2\right)\right] \tag{A9}$$

Application of series (A2) to series (A9) reduces the double series (A9) to the single series

$$S(a,0) = \left(\pi/4a^2\right) \sum_{m=1,3,\cdots}^{\infty} \left\{\left(1/m\right) \tanh\left(\pi m/2\right) - \left(1/\sqrt{m^2 + a^2}\right) \tanh\left[(\pi/2)\sqrt{m^2 + a^2}\right]\right\} \tag{A10}$$

The same approximations (A6) which simplified series (A5) into (A7) may be used to simplify series (A10); the typical results (A6) show that the hyperbolic tangents may be replaced by unity after the third term. Since the smallest nonzero value of $a$ is approximately 14, the second hyperbolic tangent of series (A10) can be set equal to unity in the first term. The series (equivalent to series (A7) in the case $b = 0$) which must now be considered is

$$S^*(a,0) = \sum_{m=1,3,\cdots}^{\infty} \left[(1/m) - \left(1/\sqrt{m^2 + a^2}\right)\right] \tag{A11}$$

If $S^*(a,0)$ of series (A11) were known, then $S(a,0)$ of series (A10) could be determined quickly, as before, by taking into account separately the first three terms of series (A10). The series (A11) is not suitable for accurate and rapid numerical calculation.

The value of $S^*(a,0)$ of series (A11) may be determined to a high degree of accuracy by means of the following result, which will be proved,

$$S^*(a,0) = \frac{1}{2}\gamma + \frac{1}{2}\log_e a + \sum_{n=1,2,\cdots}^{\infty} (-1)^{n+1} K_0(n\pi a) \tag{A12}$$

where $\gamma$ = Euler's constant ($\gamma = 0.577216 \cdots$) and $K_0$ is the modified Bessel function of the second kind of order zero. Because of the properties of $K_0$ and the range of values of $a$, it will be shown that the infinite series in equation (A12) can always be neglected, its largest value being of the order of magnitude $10^{-19}$. Then series (A12) can be used to evaluate $S^*(a,0)$ to a high degree of accuracy and $S(a,0)$ can then be determined quickly with the known value of $S^*(a,0)$.

The result (A12) will be established by converting equation (A11) into an infinite integral and evaluating the result. A check upon the work is possible by means of a contour integration; this will be discussed briefly later.

To convert equation (A11) into an integral representation, the following result from the theory of Bessel functions is needed (reference 6, p. 65)

$$\int_0^\infty e^{-mt} J_0(at)\, dt = 1\Big/\sqrt{m^2 + a^2} \tag{A13}$$

where $J_0$ is the Bessel function of the first kind of order zero; another result needed is

$$\int_0^\infty e^{-mt}\, dt = 1/m \tag{A14}$$

obtained by setting $a = 0$ in equation (A13), or by direct means. Combination of equations (A13) and (A14) yields

$$\left[(1/m) - \left(1\Big/\sqrt{m^2 + a^2}\right)\right] = \int_0^\infty \left[1 - J_o(at)\right] e^{-mt}\, dt \tag{A15}$$

Substitution of equation (A15) into equation (A11) yields

$$S^*(a,0) = \sum_{m=1,3,\ldots}^{\infty} \left[(1/m) - \left(1\Big/\sqrt{m^2 + a^2}\right)\right]$$

$$= \int_0^\infty \left(\sum_{m=1,3,\ldots}^{\infty} e^{-mt}\right)\left(1 - J_o(at)\right) dt \tag{A16}$$

Now

$$\sum_{m=1,3,\ldots}^{\infty} e^{-mt} = e^{-t}\left(1 + e^{-2t} + e^{-4t} + \ldots\right)$$

$$= \left(e^{-t}\right)\Big/\left(1 - e^{-2t}\right) \text{ (summing the geometric series)}$$

$$= 1\Big/\left(e^t - e^{-t}\right)$$

$$= 1/(2 \sinh t) \tag{A17}$$

Insertion of equation (A17) into equation (A16) yields

$$S^*(a,0) = \frac{1}{2}\int_0^\infty \frac{\left[1 - J_o(at)\right]}{(\sinh t)}\, dt \tag{A18}$$

Equation (A18) is the required integral representation of $S^*(a,0)$. This integral can be simplified by using the result (reference 7, p. 136):

$$\frac{1}{\sinh t} = \frac{1}{t} - 2t \sum_{n=1,2,\ldots}^{\infty} (-1)^{n+1}\Big/\left(t^2 + n^2\pi^2\right) \tag{A19}$$

Insertion of equation (A19) into equation (A18) yields

$$S^*(a,0) = \frac{1}{2}\int_0^\infty \left[1 - J_o(at)\right]\left[(1/t) - 2t \sum_{n=1,2,\ldots}^{\infty} (-1)^{n+1}\Big/\left(t^2 + n^2\pi^2\right)\right] dt \tag{A20}$$

One of the typical integrands to be considered in equation (A20) is of the form $tJ_o(at)\Big/\left(t^2 + n^2\pi^2\right)$; but

$$\int_0^\infty \left[tJ_o(at)\Big/\left(t^2 + n^2\pi^2\right)\right] dt = K_o(n\pi a) \tag{A21}$$

is a known result (reference 6, p. 78), where $K_o$ is the modified Bessel function of the second kind of order zero. This function is tabulated, for example, in Watson's "Bessel Functions" from 0 to 16 at intervals of 0.02 (reference 8, table II, pp. 698-713). The asymptotic formula for $K_o(x)$ is (reference 6, p. 55):

$$K_o(x) = e^{-x}\sqrt{\pi/2x}\left\{1 - \left[1^2/1!(8x)\right] + \left[\left(1^2 \times 3^2\right)/2!(8x)^2\right] - \cdots\right\} \tag{A22}$$

The usual series representation (reference 6, p. 22) may be used for small values of $x$.

If the smallest value of $a^2$ is 200, then $a$ is approximately 14. For the case $n = 1$, $e^{-n\pi a} = e^{-44} = 10^{-19}$ (approximately). This is the largest exponential term that can occur and shows that all contributions of the form of equation (A21) will be entirely without influence if numerical work to six or seven places is required. However, if $a$ were small ($a = 1$, or less) it would still be a simple matter to include terms such as those in equation (A21). With the terms (A21) considered negligible, equation (A20) may be rewritten as

$$S^*(a,0) = (1/2)\int_0^\infty \left\{(1/\sinh t) - \left[J_o(at)/t\right]\right\} dt \tag{A23}$$

The integral in equation (A23) is far simpler than that in equation (A18) since the term $\sinh t$ in equation (A23) has now been separated from $J_o(at)$. The integrals in equations (A18) and (A23) converge at $t = 0$, and both infinite integrals exist. The integral (A23) can be treated as two integrals, one over the range $0 \leqq t \leqq 1/a$ and another over the range $1/a \leqq t < \infty$. Let these integrals be $S_1^*$ and $S_2^*$, respectively; then

$$S_1^* = (1/2) \int_0^{1/a} \left\{ (1/\sinh t) - \left[J_o(at)/t\right] \right\} dt$$

$$= (1/2) \int_0^{1/a} \left[(1/\sinh t) - (1/t)\right] dt + (1/2) \int_0^{1/a} \left\{ \left[1 - J_o(at)\right]/t \right\} dt \tag{A24}$$

The term $1/t$ was added and subtracted in equation (A24) so that both integrals still converge at $t = 0$. After an integration by parts, the second integral of equation (A24) becomes (using $dJ_o(x)/dx = -J_1(x)$)

$$\left\{ (1/2)\left[1 - J_o(at)\right] \log_e (at) \right\}_{t=0}^{t=1/a} - \frac{a}{2} \int_0^{\infty} J_1(at) \log_e (at)\, dt \tag{A25}$$

The first term of equation (A25) is zero at both limits. The first integral of equation (A24) may be written as

$$\lim_{\epsilon \to 0} (1/2) \int_{\epsilon}^{1/a} \left[(1/\sinh t) - (1/t)\right] dt =$$

$$\lim_{\epsilon \to 0} (1/2) \log_e \left[\tanh (t/2)/t\right]_{t=\epsilon}^{t=1/a}$$

which is equal to

$$(1/2) \log_e \left[(\tanh 1/2a)/(1/a)\right] - (1/2) \log_e (1/2)$$

since the limit of $(\tanh \epsilon)/\epsilon$ is unity as $\epsilon$ approaches zero. Then,

$$S_1^* = (1/2) \log_e \tanh (1/2a) + (1/2) \log_e a +$$

$$(1/2) \log_e 2 - (a/2) \int_0^{1/a} J_1(at) \log_e (at) \cdot dt \qquad \text{(A26)}$$

The remaining integral is

$$S_2^* = (1/2) \int_{1/a}^{\infty} \left\{(1/\sinh t) - \left[J_o(at)/t\right]\right\} dt$$

$$= (1/2) \int_{1/a}^{\infty} (1/\sinh t)\, dt - (1/2) \int_{1/a}^{\infty} \left[J_o(at)/t\right] dt \qquad \text{(A27)}$$

Since both integrals of equation (A27) converge separately at the lower limits, the integrals may be considered separately. Integration of the second integral of equation (A27) by parts leads to the result

$$\left[(-1/2)J_o(at) \log_e at\right]_{t=1/a}^{t=\infty} - (a/2) \int_{1/a}^{\infty} J_1(at) \log_e (at)\, dt \qquad \text{(A28)}$$

The first term of equation (A28) is zero at both limits. The first integral of equation (A27) is

$$\left[(1/2) \log_e \tanh (t/2)\right]_{t=1/a}^{t=\infty} = (-1/2) \log_e \tanh (1/2a)$$

Addition of $S_1^*$ and $S_2^*$ yields

$$S^*(a,0) = S_1^* + S_2^*$$

$$= \frac{1}{2} \log_e (2a) - (a/2) \int_0^{\infty} J_1(at) \log_e (at)\, dt \qquad \text{(A29)}$$

The terms containing $\tanh 1/2a$ cancel and the two integrals can be combined into one integral. Now (reference 6, p. 76),

$$a\int_0^\infty J_1(at)\log_e(at)\,dt = \int_0^\infty J_1(x)\log_e x\,dx$$

$$= -\gamma + \log_e 2 \qquad \text{(setting } x = at\text{)} \tag{A30}$$

where $\gamma$ = Euler's constant = 0.577 216 · · ·. Insertion of equation (A30) into equation (A29) and simplification yield

$$S^*(a,0) = (1/2)\gamma + (1/2)\log_e a \tag{A31}$$

Terms of the type in equation (A21) have been neglected in equation (A31). The exact result (A12) is valid for all $a > 0$ and is repeated here for convenience:

$$S^*(a,0) = \sum_{m=1,3,\cdots}^{\infty}\left[(1/m) - \left(1\Big/\sqrt{m^2 + a^2}\right)\right]$$

$$= (1/2)\gamma + (1/2)\log_e a + \sum_{n=1,2,\cdots}^{\infty}(-1)^{n+1}K_o(n\pi a) \tag{A32}$$

General Case $S(a,b)$ for $a \neq 0$ and $b \neq 0$

The use of equation (A32) permits $S^*(b,0) - S^*(a,0)$ to be written as $(a > 0,\ b > 0)$:

$$\sum_{m=1,3,\cdots}^{\infty}\left[\left(1\Big/\sqrt{m^2 + a^2}\right) - \left(1\Big/\sqrt{m^2 + b^2}\right)\right] = (1/2)\log_e(b/a) +$$

$$\sum_{n=1,2,\cdots}^{\infty}(-1)^{n+1}\left[K_o(n\pi b) - K_o(n\pi a)\right] \tag{A33}$$

The series (A33) would be needed in the evaluation of the general series $S(a,b)$, which is a natural generalization of equation (25). It is now possible to evaluate equation (A33) in precisely the same way as the series (A1) was evaluated for the case of $a \neq 0$, $b = 0$. The case of $a = 0$, $b = 0$ has already been treated. Only the case of $a = b \neq 0$ must be considered to complete the discussion of equation (A33). Equation (A33) can be written as

$$S(a,b) = \left[1/\left(b^2 - a^2\right)\right] \sum_{m=1,3,\cdots}^{\infty} \sum_{n=1,3,\cdots}^{\infty} \left\{\left[1/\left(m^2 + n^2 + a^2\right)\right] - \left[1/\left(m^2 + n^2 + b^2\right)\right]\right\} \tag{A34}$$

The auxiliary series for equation (A34), which corresponds to equation (A11) in relation to equation (A9), is

$$S^*(a,b) = 1/\left(b^2 - a^2\right) \sum_{m=1,3,\cdots}^{\infty} \left[\left(1\Big/\sqrt{m^2 + a^2}\right) - \left(1\Big/\sqrt{m^2 + b^2}\right)\right] \tag{A35}$$

Application of equation (A33) yields

$$S^*(a,b) = \frac{1}{(b+a)} \left\{\frac{\log_e b - \log_e a}{b - a} + \sum_{n=1,3,\cdots}^{\infty} (-1)^{n+1} \left[\frac{K_o(n\pi b) - K_o(n\pi a)}{b - a}\right]\right\} \tag{A36}$$

It is possible to let $b$ approach $a$ in equation (A36) to obtain

$$S^*(a,a) = \frac{1}{2a}\left[(1/a) + \sum_{n=1,2,\cdots}^{\infty} (-1)^n K_1(n\pi a)\right] \tag{A37}$$

since the expressions of equation (A36) define the derivatives of $(\log_e a)$ and of $K_o(n\pi a)$, respectively, with $dK_o(x)/dx = -K_1(x)$. The function $K_1(x)$ is the modified Bessel function of the second kind of order one and is also tabulated in Watson's "Bessel Functions" (reference 8, table II, pp. 698-713). Thus equations (A37) and (A33) can in general be used to evaluate equation (A1) for all values of $(a,b)$ which are not both zero.

The result (A33) can be checked by a contour integration over the contour shown in figure 7; the details will be omitted. The proper integral to consider is

$$(1/4)\int_C \left\{\left[H_o^{(1)}(az) - H_o^{(1)}(bz)\right]\Big/(\sinh z)\right\} dz$$

The contribution over the large semicircle approaches zero as $R \longrightarrow \infty$ while along the real axis the result is

$$\frac{1}{2}\int_0^\infty \left\{\left[J_o(at) - J_o(bt)\right]\Big/(\sinh t)\right\} dt$$

which is the integral representation of equation (A33). The residue at $z = 0$ can be shown to be $(1/2) \log_e (b/a)$ while the poles at $z = n\pi i$ $(n=1,2,\cdots)$ contribute residues which are the terms of the infinite series (A33). This method shows why the original integral (A18) could not be evaluated in this manner, for it is not possible to let $a$ or $b$ approach zero in equation (A33). The case $a = 0$ must be treated separately.

The method developed here for the evaluation of equation (A1) was not that used at the start of the calculations but was completed later and then used for all calculations. The method originally used may be summarized briefly as follows: Since equation (A3) permits an explicit summation of equation (A1) by rows, a definite number of rows (actually, 15) was summed quickly by this method. By symmetry that is also the sum of the first 15 columns. To illustrate the procedure graphically (see fig. 8) let the entire quadrant represent $S(a,0)$. Summation of the rows is represented by the shaded area 125678, and summation of the same number of columns, by 123458. The terms 1258 are counted twice and must be found separately. Thus, the sum of the terms contained in the L-shaped region 12345678 is known; if this sum is subtracted from the series itself, the remaining terms correspond to the unshaded area 456∞. This remainder of the series was approximated by the integral

$$\int_u^\infty \int_u^\infty \frac{dx\, dy}{\left(x^2 + y^2\right)\left(x^2 + y^2 + a^2\right)}$$

where the lower limits $u$ were chosen appropriately, depending upon the number of columns taken initially. This integral was used to determine upper and lower bounds for the remainder of the series. Much of the

work was directed toward obtaining a useful value of the integral for large values of $a$. In this way, bounds on $S(a,0)$ were computed. This established an upper limit to the percentage error in the results.

One such calculation led to the values $(a^2 = 40,000)$:

$$\text{Upper bound:} \quad 56.575 \times 10^{-6}$$

$$\text{Lower bound:} \quad 55.912 \times 10^{-6}$$

The method using equation (A12) yields the value $56.0551 \times 10^{-6}$ which lies between the calculated values of the upper bound and lower bound.

## Generalization of Series $S(a,b)$

The series

$$S(a,b,c) = \sum_{m=1,3,\cdots}^{\infty} \sum_{n=1,3,\cdots}^{\infty} 1/\left(m^2 + c^2n^2 + a^2\right)\left(m^2 + c^2n^2 + b^2\right) \tag{A38}$$

is the generalization of series (A1) to the plate of rectangular shape; $c = 1$ corresponds to the case of a square. Equation (A38) may be written in the form

$$S(a,b,c) = 1/\left(b^2 - a^2\right) \sum_{m=1,3,\cdots}^{\infty} \sum_{n=1,3,\cdots}^{\infty} \left\{\left[1/\left(m^2 + c^2n^2 + a^2\right)\right] - \left[1/\left(m^2 + c^2n^2 + b^2\right)\right]\right\} \tag{A39}$$

The summation with respect to $m$ may be carried out as before; the use of equation (A3) yields

$$S(a,b,c) = \frac{\pi}{4\left(b^2 - a^2\right)} \sum_{n=1,3,\cdots}^{\infty} \left[\frac{\tanh\,(\pi/2)\sqrt{c^2n^2 + a^2}}{\sqrt{c^2n^2 + a^2}} - \frac{\tanh\,(\pi/2)\sqrt{c^2n^2 + b^2}}{\sqrt{c^2n^2 + b^2}}\right] \tag{A40}$$

In this case, the auxiliary series is

$$S^*(a,b,c) = \frac{1}{c} \sum_{n=1,3,\ldots}^{\infty} \left[\left(1\Big/\sqrt{n^2 + a^2/c^2}\right) - \left(1\Big/\sqrt{n^2 + b^2/c^2}\right)\right] \tag{A41}$$

which can be evaluated by equation (A33). The case $a = b$ can be treated as before by the use of equation (A37). Thus the general series (A38) can also be evaluated by the methods already developed.

Polytechnic Institute of Brooklyn
Brooklyn, N. Y., June 19, 1951

## REFERENCES

1. Hoff, N. J.: Bending and Buckling of Rectangular Sandwich Plates. NACA TN 2225, 1950.

2. Timoshenko, S.: Theory of Plates and Shells. McGraw-Hill Book Co., Inc., 1940.

3. Kommers, W. J., and Norris, C. B.: Effects of Shear Deformation in the Core of a Flat Rectangular Sandwich Panel. Stiffness of Flat Panels of Sandwich Construction Subjected to Uniformly Distributed Loads Normal to Their Surfaces - Simply Supported Edges. Rep. No. 1583-A, Forest Products Lab., U. S. Dept. Agric., Oct. 1948.

4. Chrystal, G.: Algebra, Part II. A. and C. Black, Ltd. (London), 1931.

5. Knopp, Konrad: Theory and Application of Infinite Series. Blackie and Son, Ltd. (London), 1928.

6. Gray, Andrew, Mathews, G. B., and MacRobert, T. M.: A Treatise on Bessel Functions and Their Applications to Physics. Macmillian and Co., Ltd. (London), 1931.

7. Whittaker, E. T., and Watson, G. N.: Modern Analysis. Cambridge Univ. Press (London), 1940.

8. Watson, G. N.: A Treatise on the Theory of Bessel Functions. Second ed., Cambridge Univ. Press (London), 1945.

TABLE I

COMPARISON OF TESTED AND CALCULATED DEFLECTIONS OF A SIMPLY SUPPORTED SQUARE SANDWICH PLATE UNDER UNIFORM LOAD

[Aluminum faces with $E = 10 \times 10^6$ psi and balsa core with $G_c = 12{,}670$ psi (reference 3); average absolute error, 4.7 percent]

| Plate | Thickness of faces (in.) | Thickness of core (in.) | Span (in.) | Unit load on plate (psi) | Test deflection (reference 3) (in.) | Calculated deflection (in.) | Percent error |
|---|---|---|---|---|---|---|---|
| AB-4 | 0.032 | 0.514 | 44.20 | 0.5408 | 0.168 | 0.171 | 1.8 |
| AB-3 | .032 | .390 | 44.20 | .7211 | .359 | .377 | 5.0 |
| AB-4 | 0.032 | 0.501 | 38.04 | 0.7211 | 0.123 | 0.134 | 8.9 |
| AB-3 | .032 | .381 | 38.04 | .6490 | .189 | .198 | 4.8 |
| AB-4 | 0.032 | 0.507 | 32.04 | 0.7211 | 0.072 | 0.069 | -4.2 |
| AB-3 | .032 | .385 | 32.04 | .7211 | .112 | .111 | -.9 |
| AB-4 | 0.032 | 0.503 | 28.04 | 0.5768 | 0.035 | 0.034 | -2.9 |
| AB-3 | .032 | .388 | 28.04 | .7211 | .065 | .066 | -1.5 |
| AB-4 | 0.032 | 0.513 | 21.97 | 1.803 | 0.0460 | 0.0422 | -8.3 |
| AB-3 | .032 | .390 | 21.97 | 1.082 | .0441 | .0402 | -8.9 |

TABLE II

COMPARISON OF TESTED AND CALCULATED DEFLECTIONS OF A SIMPLY SUPPORTED SQUARE SANDWICH PLATE UNDER UNIFORM LOAD

[Aluminum faces with $E = 10 \times 10^6$ psi and cellular cellulose-acetate core with $G_c = 11{,}860$ psi (reference 3); average absolute error, 4.9 percent]

| Plate | Thickness of faces (in.) | Thickness of core (in.) | Span (in.) | Unit load on plate (psi) | Test deflection (reference 3) (in.) | Calculated deflections (in.) | Percent error |
|---|---|---|---|---|---|---|---|
| AC-4 | 0.032 | 0.493 | 44.20 | 0.5047 | 0.197 | 0.186 | -5.6 |
| AC-3 | .032 | .371 | 44.20 | .5047 | .316 | .306 | -3.2 |
| AC-4 | 0.032 | 0.489 | 38.04 | 0.5768 | 0.132 | 0.124 | -6.0 |
| AC-3 | .032 | .367 | 38.04 | .5768 | .210 | .203 | -3.3 |
| AC-4 | 0.032 | 0.489 | 32.04 | 0.7211 | 0.090 | 0.083 | -7.8 |
| AC-3 | .032 | .364 | 32.04 | .7211 | .146 | .137 | -6.2 |
| AC-4 | 0.032 | 0.493 | 28.04 | 1.010 | 0.073 | 0.072 | -1.4 |
| AC-3 | .032 | .370 | 28.04 | .7211 | .084 | .082 | -2.4 |
| AC-4 | 0.032 | 0.494 | 21.97 | 1.082 | 0.0378 | 0.0339 | -10.3 |
| AC-3 | .032 | .367 | 21.97 | .7211 | .0354 | .0359 | 1.4 |

TABLE III

COMPARISON OF TESTED AND CALCULATED DEFLECTIONS OF A SIMPLY SUPPORTED SQUARE SANDWICH PLATE UNDER UNIFORM LOAD

[Aluminum faces with $E = 10 \times 10^6$ psi and corrugated paper honeycomb core with $G_c = 5840$ psi (reference 3); average absolute error, 6.5 percent]

| Plate | Thickness of faces (in.) | Thickness of core (in.) | Span (in.) | Unit load on plate (psi) | Test deflection (reference 3) (in.) | Calculated deflection (in.) | Percent error |
|---|---|---|---|---|---|---|---|
| AF-4 | 0.032 | 0.755 | 44.20 | 0.7211 | 0.110 | 0.114 | 3.6 |
| AF-3 | .032 | .637 | 44.20 | .7211 | .158 | .155 | -1.9 |
| AF-4 | 0.032 | 0.751 | 38.04 | 0.7211 | 0.072 | 0.0653 | -9.3 |
| AF-3 | .032 | .632 | 38.04 | .7211 | .087 | .0890 | 2.3 |
| AF-4 | 0.032 | 0.752 | 32.04 | 0.7211 | 0.041 | 0.035 | -15 |
| AF-3 | .032 | .632 | 32.04 | .7211 | .054 | .047 | -13 |
| AF-4 | 0.032 | 0.753 | 28.04 | 0.7211 | 0.024 | 0.021 | -12 |
| AF-3 | .032 | .633 | 28.04 | .7211 | .030 | .029 | -3.3 |
| AF-4 | 0.032 | 0.754 | 21.97 | 2.884 | 0.0391 | 0.0384 | -1.8 |
| AF-3 | .032 | .636 | 21.97 | 2.163 | .0368 | .0359 | -2.4 |

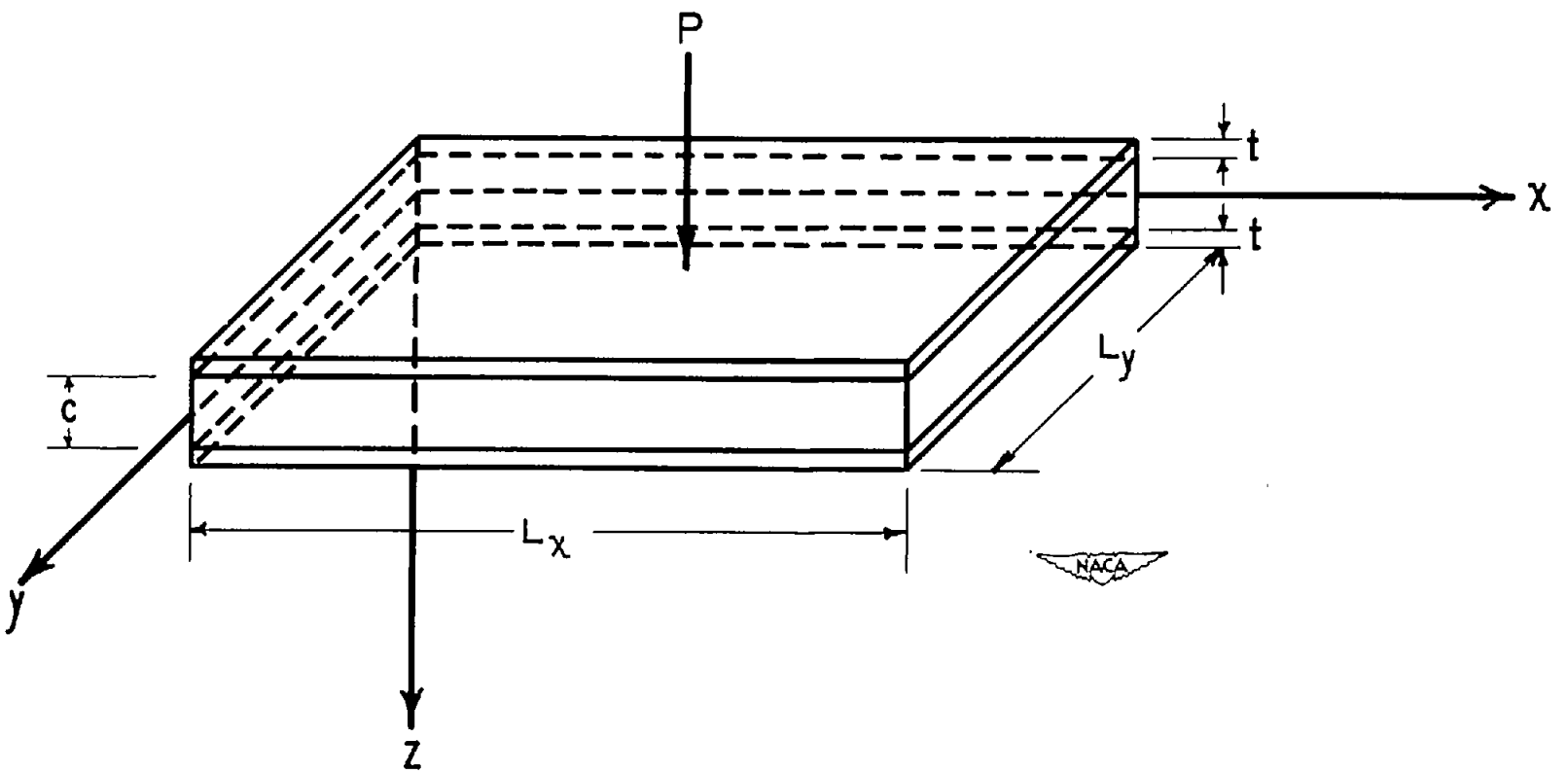


Figure 1.- Sandwich plate.

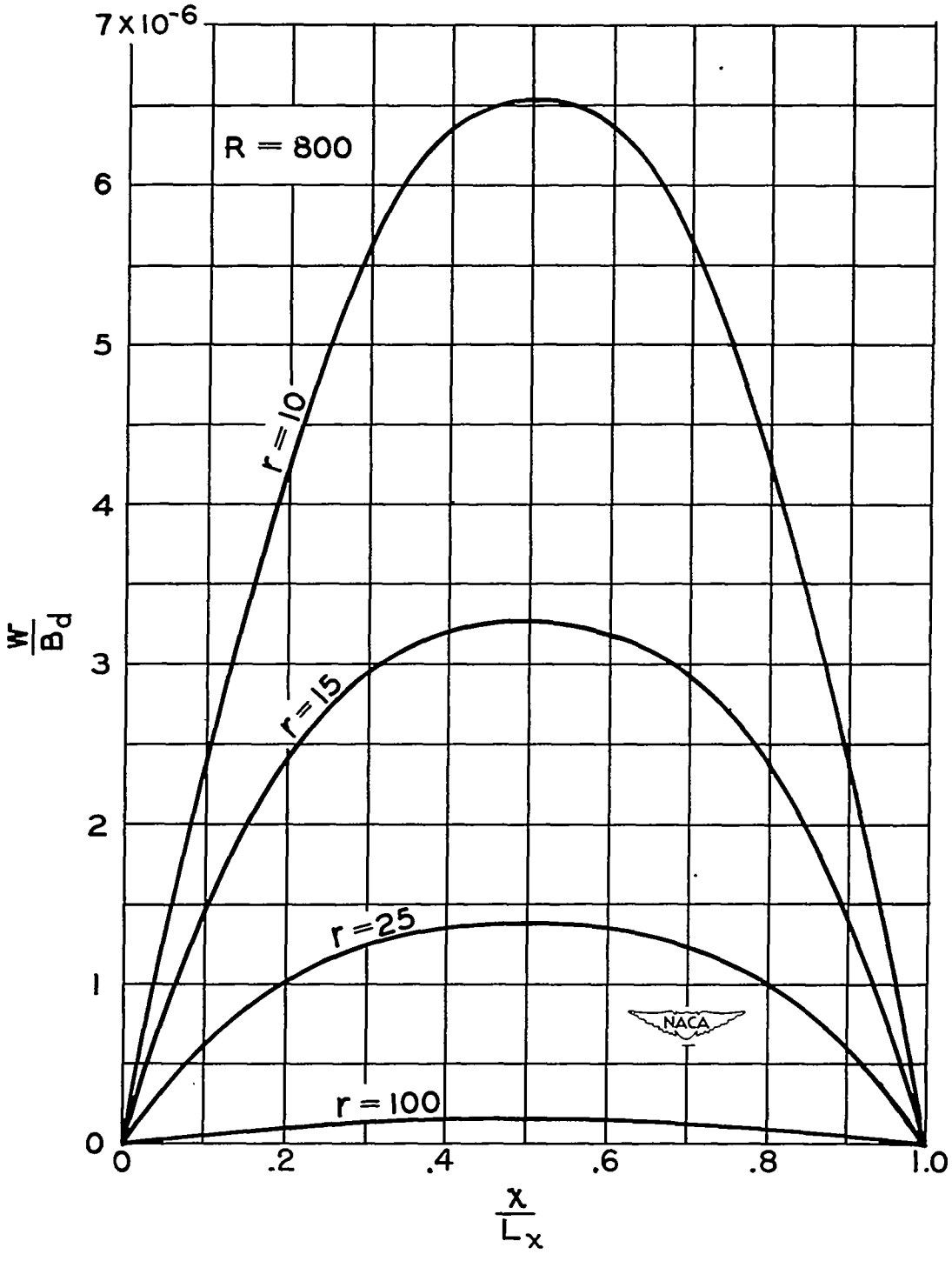


Figure 2.- Deflection of square sandwich plate with strong core under uniform normal load at $y = \frac{L_y}{2}$.

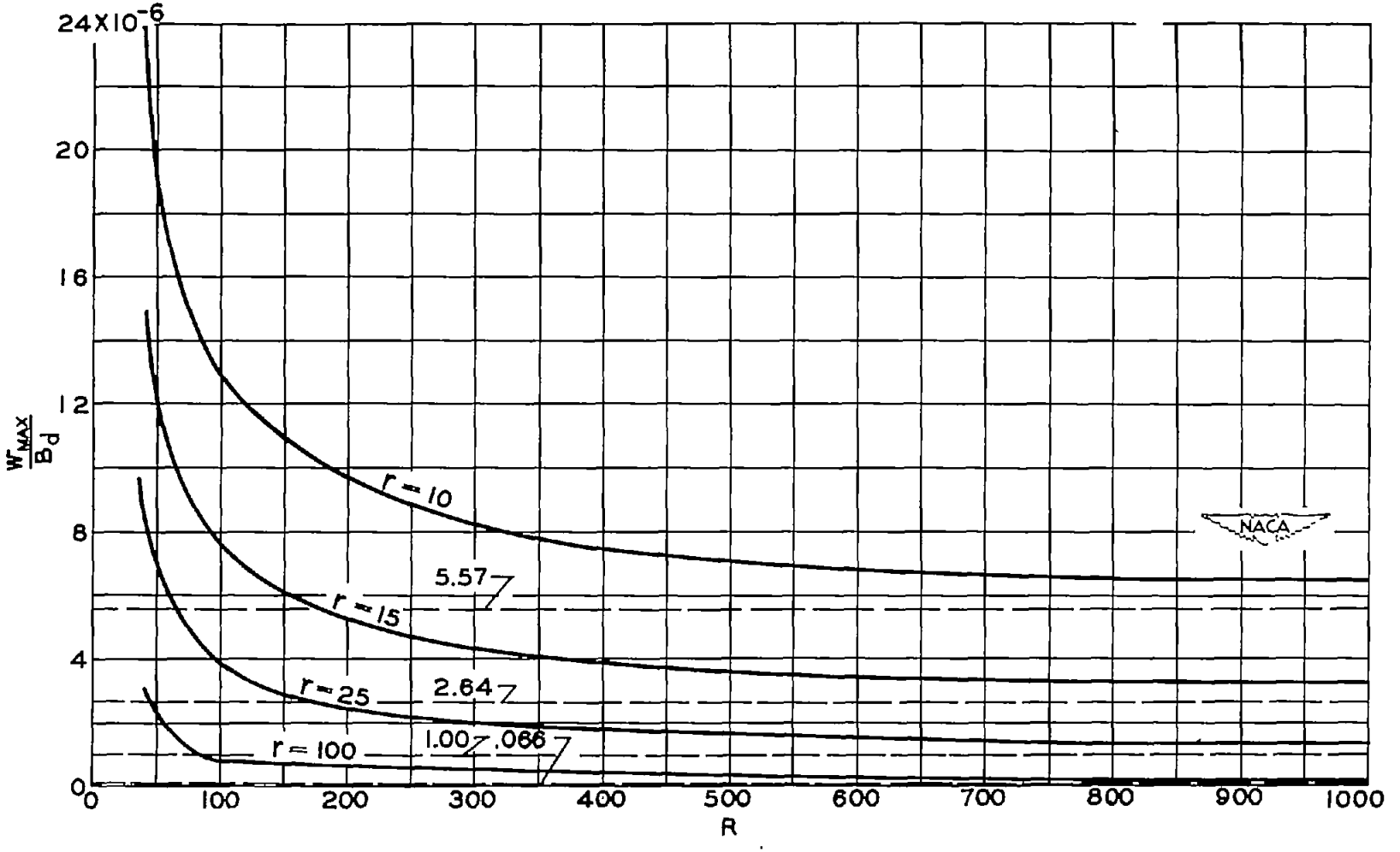


Figure 3.- Maximum deflection of square sandwich plate under uniform load.

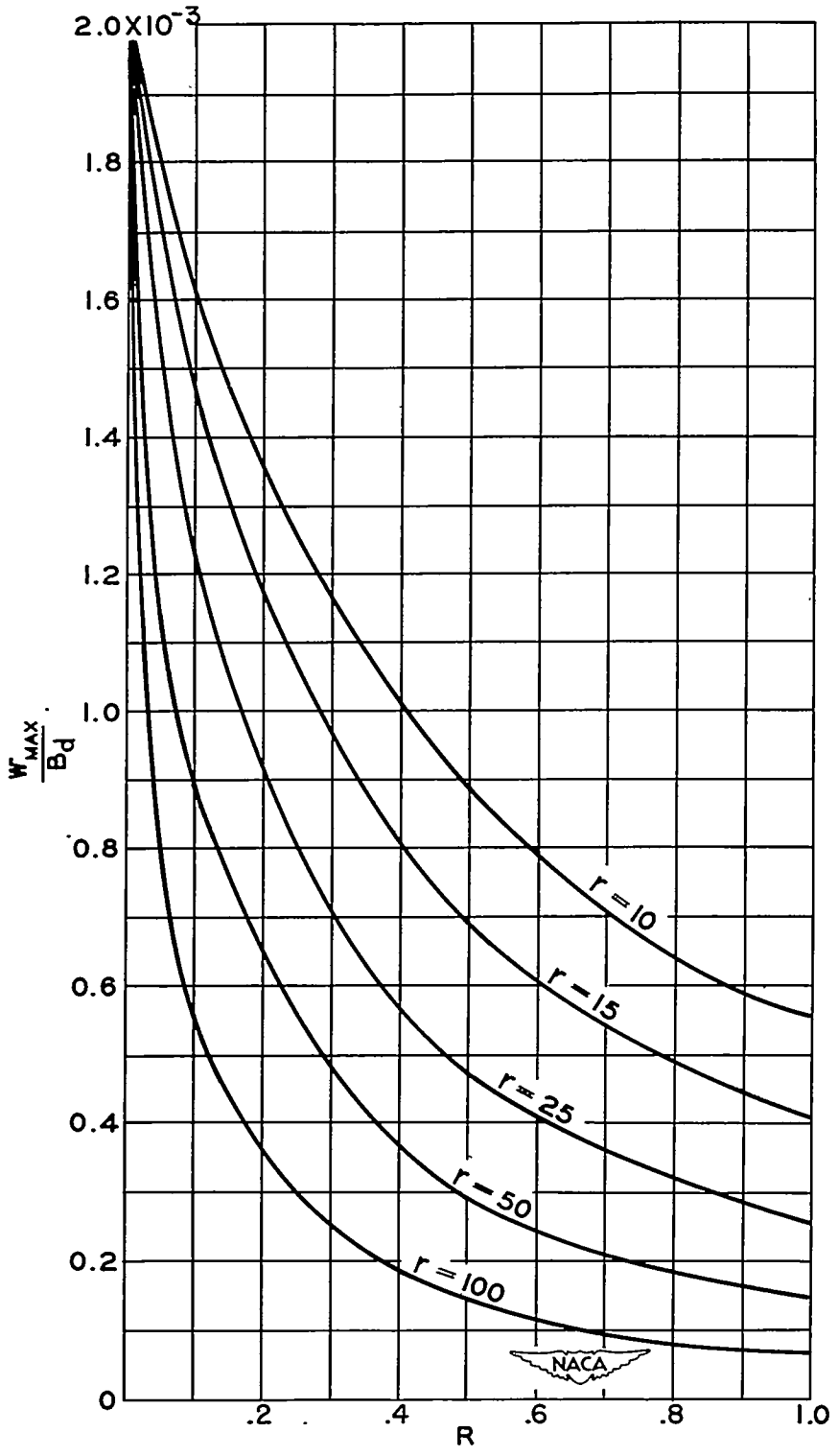


Figure 4.- Maximum deflection of square sandwich plate with very weak core under uniform load.

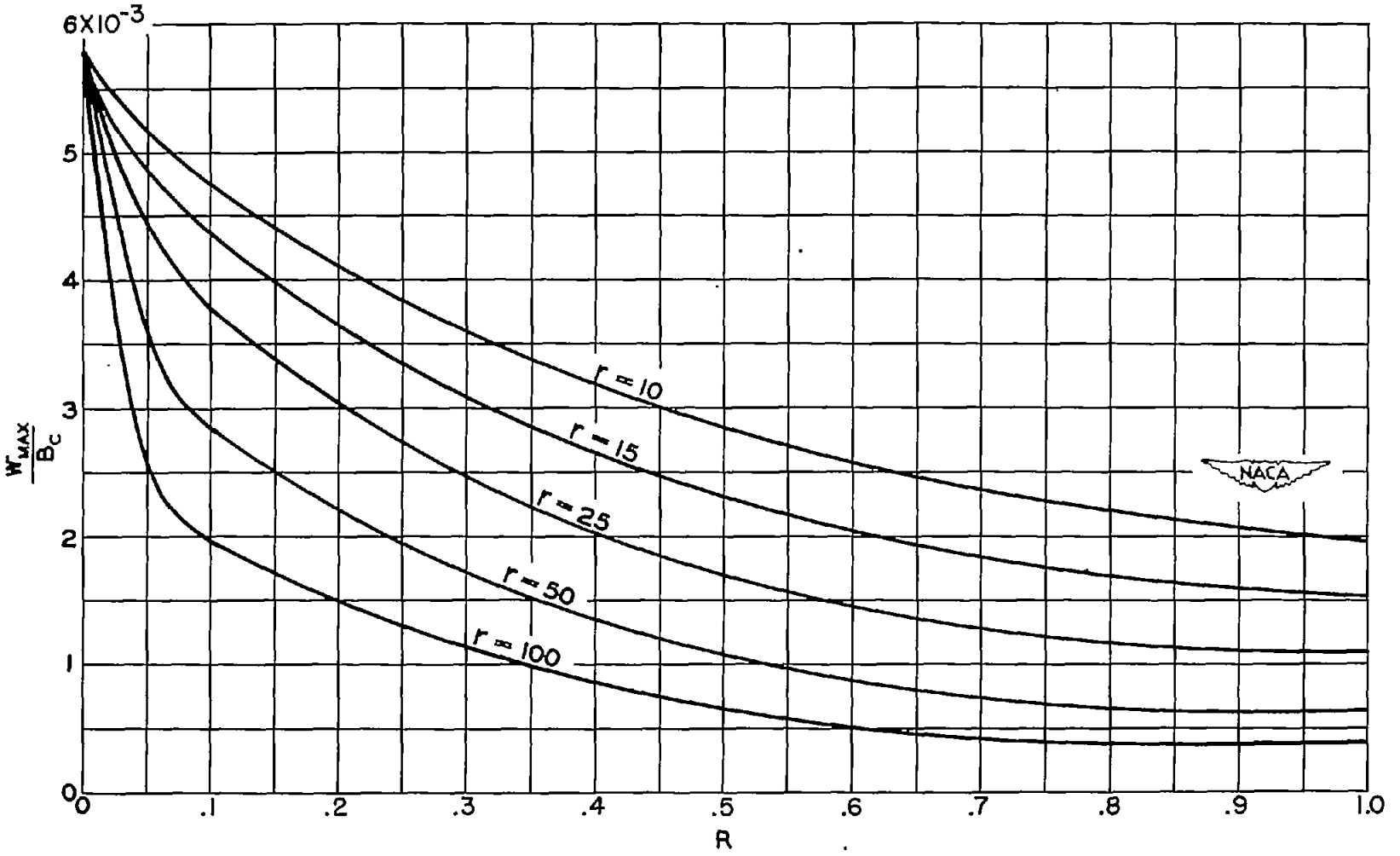


Figure 5.- Maximum deflection of square sandwich plate with very weak core with concentrated load at center.

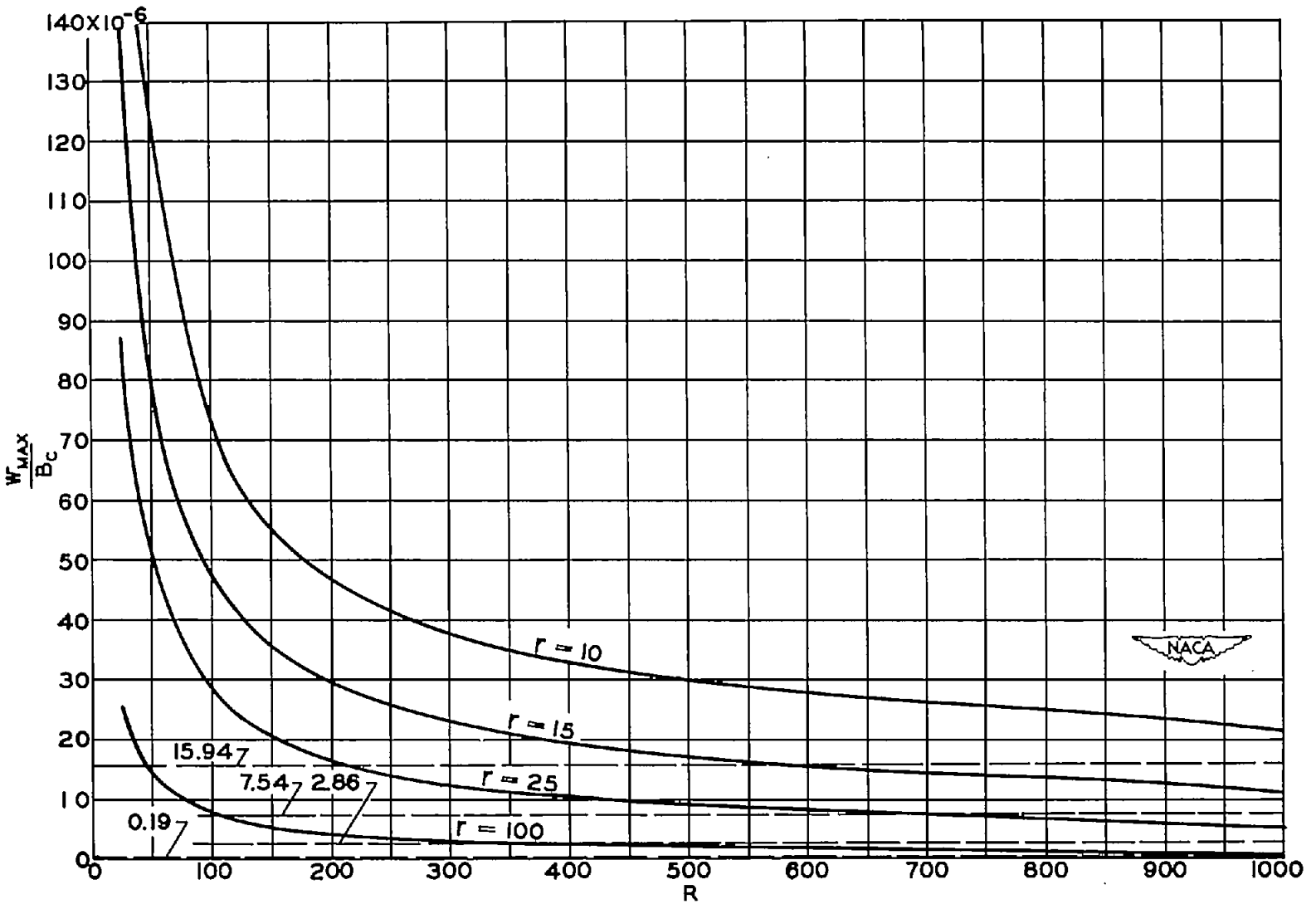


Figure 6.- Maximum deflection of square sandwich plate with concentrated load at center.

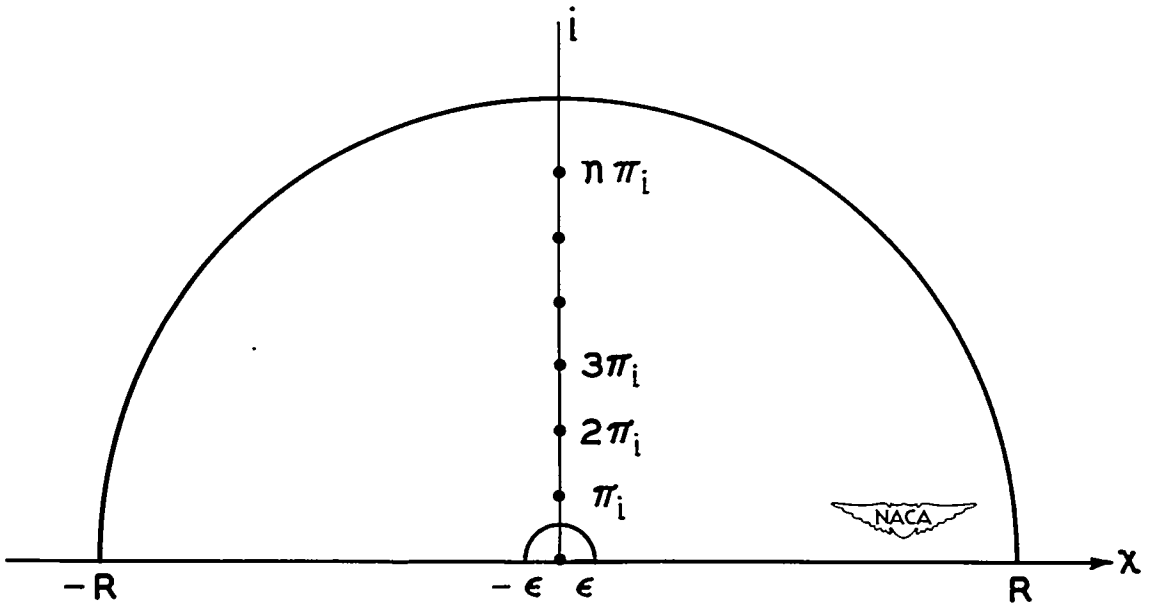


Figure 7.- Contour for $S^*(b,0) - S^*(a,0)$.

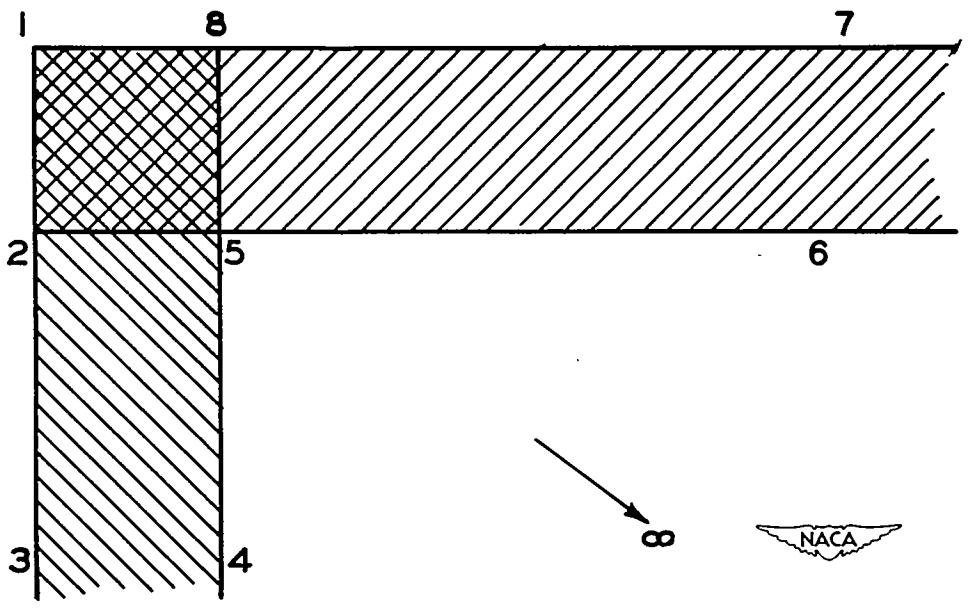


Figure 8.- Schematic representation for summing $S(a,0)$.

NACA - Langley Field, Va.