REPORT 1070

MATRIX METHOD OF DETERMINING THE LONGITUDINAL-STABILITY COEFFICIENTS AND FREQUENCY RESPONSE OF AN AIRCRAFT FROM TRANSIENT FLIGHT DATA[1]

By James J. Donegan and Henry A. Pearson

SUMMARY

A matrix method is presented for determining the longitudinal-stability coefficients and frequency response of an aircraft from arbitrary maneuvers. The method is devised so that it can be applied to time-history measurements of combinations of such simple quantities as angle of attack, pitching velocity, load factor, elevator angle, and hinge moment to obtain the over-all coefficients. Although the method has been devised primarily for the evaluation of stability coefficients which are of primary interest in most aircraft loads and stability studies, it can be used also, with a simple additional computation, to determine the frequency-response characteristics. The entire procedure can be applied or extended to other problems which can be expressed by linear differential equations.

INTRODUCTION

The longitudinal characteristics of an aircraft are often related by a second-order linear differential equation in which the aircraft is assumed to have freedom in pitch and in vertical motion; changes in forward velocity are so small that they can be neglected. In the evaluation of tail loads, the coefficients of the differential equation and the elevator forcing function are generally assumed to be known and the response is to be determined. In the evaluation of gust problems the response and the coefficients are assumed to be known and the forcing function is to be determined. By analogy in stability and control work, it is desirable to determine the restoring-force and damping-force coefficients from known forcing functions and responses. In case the damping is small enough to obtain the rate of decay (or logarithmic decrement) and period from the oscillation, the required damping and restoring coefficients are easily computed. Models employed in rocket-powered and drop tests can be and usually are so ballasted that such well-defined oscillations are obtained; however, the longitudinal oscillations of piloted airplanes ordinarily are nearly critically damped and this analysis procedure cannot be applied. In any case, additional data and analysis are required to evaluate the control-effectiveness coefficients.

Appreciable work has been done recently in the field of determining the frequency-response characteristics of aircraft in flight and evaluating the stability coefficients from the frequency-response data. In general, the methods for determining these relationships have been to impose actually prescribed motions such as unit steps, triangular pulses, or sinusoidal motions to the elevator by means of special equipment and then to measure the responses. The theoretical methods for reducing such data are usually tailored to fit the prescribed elevator motion. References 1 and 2 present methods of treating input and output data by Fourier analysis to determine the frequency response. Compared with the direct sine-wave input method of evaluating the frequency response, these methods require less special equipment and flight time at the expense of additional computation. For the practical application of the Fourier transform method, certain restrictions are placed on the nature of the input and the resultant output motions: the motions must start from a trimmed steady-state condition and, at the end of the transient period, must approach either the original or the new steady or quasi-steady trim conditions.

In view of the complications and limitations of existing methods of flight evaluation of stability coefficients and frequency response, development of a simple and less restricted flight test and associated analysis was considered desirable. A matrix method for evaluating the longitudinal-stability coefficients of an aircraft directly from the input and output time histories corresponding to arbitrary control motions has been derived in the present report. The frequency response and some of the stability derivatives may be evaluated once these coefficients are known. Although this method was derived to determine the second-order longitudinal response of an aircraft, it can be applied to other systems which can be approximated by second-order differential equations; extension of the method to higher-order linear systems is also possible.

SYMBOLS

A_1, A_2	combinations of aerodynamic parameters (see table I)	
b	wing span, feet	
b_t	tail span, feet	
c	chord, feet	
C_h	hinge-moment coefficient	$\left(\dfrac{H}{\frac{\rho}{2} V^2 c_t S_t}\right)$

[1] Supersedes NACA TN 2370, "Matrix Method of Determining the Longitudinal-Stability Coefficients and Frequency Response of an Aircraft From Transient Flight Data" by James J. Donegan and Henry A. Pearson, 1951.

C_{h_δ} rate of change of hinge-moment coefficient with elevator angle $(\partial C_h/\partial \delta)$

C_L lift coefficient (L/qS)

C_m pitching-moment coefficient of airplane without horizontal tail (Mb/qS^2)

C_{m_t} pitching-moment coefficient of isolated horizontal tail surface

g acceleration due to gravity, feet per second per second

H hinge moment

k_y airplane radius of gyration about pitching axis, feet

K empirical constant denoting ratio of damping moment of complete airplane to damping moment produced by tail

L lift, pounds

m airplane mass, slugs (W/g)

M pitching moment of airplane, foot-pounds

n airplane load factor

q dynamic pressure, pounds per square foot $\left(\frac{1}{2}\rho V^2\right)$

S wing area, square feet

S_t horizontal-tail area, square feet

t time, seconds

V true velocity, feet per second

W airplane weight, pounds

x_t length from center of gravity of airplane to aerodynamic center of tail (negative for conventional airplanes), feet

$K_1, K_2, K_3, K_4, K_5, K_6, K_7, K_8, K_9, K_1^0, K_2^0, K_3^0, K_5^0$ dimensional constants occurring in equations (see table I)

α wing angle of attack, radians

α_t tail angle of attack, radians

γ flight-path angle, radians

θ angle of pitch $(\alpha+\gamma)$

δ elevator deflection, radians

ϵ downwash angle, radians $\left(\frac{d\epsilon}{d\alpha}\alpha\right)$

η_t tail efficiency factor (q_t/q)

ϕ phase angle between incremental load factor and elevator deflection, degrees

ρ mass density of air, slugs per cubic foot

τ dummy variable of integration

ω elevator angular velocity, radians per second

The notations $\dot{\alpha}$ and $\dot{\theta}$, $\ddot{\alpha}$ and $\ddot{\theta}$, and so forth, denote single and double differentiations with respect to time.

$\bar{a}$ bar over letter represents maximum value

$|a|$ bars on sides of symbol represent absolute value

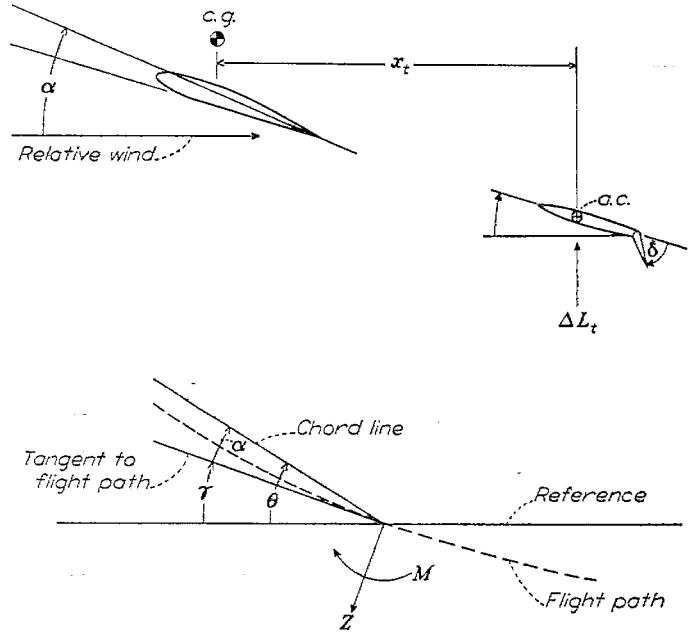

FIGURE 1.—Sign conventions employed. Positive directions shown.

Matrix notation:

|| || rectangular matrix

[ ] square matrix

{ } column matrix

$||C_1||$ integrating matrix (see table II)

$||A||$ matrix defined by equation (24)

$||A||'$ transpose of $||A||$

Subscripts:

i denotes row elements in matrix

j denotes column elements in matrix

t tail

LONGITUDINAL EQUATIONS OF MOTION

ELEVATOR MOTION

In this section the usual longitudinal equations of motion following an elevator motion are derived in such a manner as to obtain expressions between some of the simple combinations of variables which are measurable in flight: namely, angle of attack and elevator angle, pitching angular velocity and elevator angle, or load factor and elevator angle. The usual assumptions of linearity, small angles, no loss in air speed during the maneuver, and no flexibility are implied.

As in reference 3, the differential equations of motion of an airplane due to a given elevator deflection may be written as (see fig. 1 for definitions):

$$m\dot{\gamma}V-\frac{dC_L}{d\alpha}\Delta\alpha qS-\left(\frac{dC_L}{d\delta}\right)_t\eta_t qS_t\Delta\delta=0 \tag{1}$$

$$\frac{dC_m}{d\alpha}\Delta\alpha q\frac{S^2}{b}+\frac{dC_{L_t}}{d\alpha_t}\left[\Delta\alpha\left(1-\frac{d\epsilon}{d\alpha}\right)-\dot{\alpha}\frac{x_t}{V}\frac{d\epsilon}{d\alpha}-\dot{\theta}\frac{x_t}{V}\frac{K}{\sqrt{\eta_t}}+\frac{d\alpha_t}{d\delta}\Delta\delta\right]\eta_t qS_t x_t+\frac{dC_{m_t}}{d\delta}\eta_t q\frac{S_t^2}{b_t}\Delta\delta-mK_y^2\ddot{\theta}=0 \tag{2}$$

By use of the definitions

$$\left.\begin{aligned}\Delta\theta&=\Delta\gamma+\Delta\alpha\\ \dot{\theta}&=\dot{\gamma}+\dot{\alpha}\\ \ddot{\theta}&=\ddot{\gamma}+\ddot{\alpha}\end{aligned}\right\}\tag{3}$$

equations (1) and (2) are reducible to the following second-order differential equation giving the relation between angle of attack and elevator angle:

$$\ddot{\alpha}+K_1\dot{\alpha}+K_2\Delta\alpha=K_3\Delta\delta+K_4\dot{\delta}\tag{4}$$

where the K's are the constants for a given set of conditions and are defined in table I. The coefficient K_1 represents an effective aerodynamic-damping coefficient; K_2 represents an effective aerodynamic restoring-force coefficient; K_3 and K_4 represent effective elevator-control power coefficients.

An alternative form of equation (4), expressing the relation between angle of pitch and elevator angle, may be obtained by inserting relations of equation (3) into equation (4) and noting from equation (1) that

$$\left.\begin{aligned}\dot{\gamma}&=A_1\Delta\alpha+A_2\Delta\delta\\ \ddot{\gamma}&=A_1\dot{\alpha}+A_2\dot{\delta}\\ \Delta\gamma&=A_1\int^t\Delta\alpha\,dt+A_2\int_0^t\Delta\delta\,dt\end{aligned}\right\}\tag{5}$$

where A_1 and A_2 are combinations of aerodynamic parameters defined in table I. The equation obtained after these preceding substitutions are made is

$$\ddot{\theta}+K_1\dot{\theta}+K_2\Delta\theta=K_5\Delta\delta+K_6\int_0^t\Delta\delta\,dt\tag{6}$$

where (see table I)

$$K_5=K_3+K_1A_2+K_4A_1$$

$$K_6=A_2K_2+A_1K_3$$

From the following definition for load-factor increment

$$\Delta n=\frac{V}{g}\dot{\gamma}=\frac{dC_L}{d\alpha}\frac{q}{W/S}\Delta\alpha+\frac{V}{g}A_2\Delta\delta\tag{7}$$

it follows that

$$\left.\begin{aligned}\Delta\alpha&=\frac{W/S}{\frac{dC_L}{d\alpha}q}\Delta n-\frac{A_2}{A_1}\Delta\delta\\ \dot{\alpha}&=\frac{W/S}{\frac{dC_L}{d\alpha}q}\dot{n}-\frac{A_2}{A_1}\dot{\delta}\\ \ddot{\alpha}&=\frac{W/S}{\frac{dC_L}{d\alpha}q}\ddot{n}-\frac{A_2}{A_1}\ddot{\delta}\end{aligned}\right\}\tag{8}$$

TABLE I.—DEFINITION OF CONSTANTS OCCURRING IN EQUATIONS

Constant	Definition
K_1	$\frac{\rho V}{2m}\left[\frac{dC_{L_t}}{d\alpha_t}\frac{S_tx_t^2}{k_y^2}\eta_t\left(\frac{K}{\sqrt{\eta_t}}+\frac{d\epsilon}{d\alpha}\right)+\frac{dC_L}{d\alpha}S\right]$
K_2	$-\frac{\rho V^2}{2m}\left\{\frac{dC_m}{d\alpha}\frac{S^2}{k_y^2b}+\frac{dC_{L_t}}{d\alpha_t}\eta_t\frac{S_tx_t}{k_y^2}\left[\left(1-\frac{d\epsilon}{d\alpha}\right)-\frac{dC_L}{d\alpha}\frac{K}{\sqrt{\eta_t}}\frac{\rho}{2}\frac{Sx_t}{m}\right]\right\}$
K_3	$\frac{\rho V^2}{2m}\left[\frac{dC_{L_t}}{d\delta}\eta_t\frac{S_tx_t}{k_y^2}+\frac{dC_{m_t}}{d\delta}\eta_t\frac{S_t^2}{b_tk_y^2}-\frac{dC_{L_t}}{d\alpha_t}\frac{dC_{L_t}}{d\delta}\frac{K\eta_t^2}{\sqrt{\eta_t}}\frac{\rho}{2}\frac{x_t^2S_t^2}{mk_y^2}\right]$
K_4	$-\frac{dC_{L_t}}{d\delta}\eta_t\frac{S_t}{mV}q$
A_1	$\frac{\frac{dC_L}{d\alpha}qS}{mV}$
A_2	$\frac{\frac{dC_{L_t}}{d\delta}\eta_tqS_t}{mV}$
K_5	$K_3+K_1A_2+K_4A_1$
K_6	$A_2K_2+A_1K_3$
K_7	$\frac{\frac{dC_L}{d\alpha}q}{W/S}K_3+\frac{V}{g}A_2K_2$
K_8	$\frac{\frac{dC_L}{d\alpha}q}{W/S}K_4+\frac{V}{g}A_2K_1$
K_9	$\frac{V}{g}A_2$
K_1^0	$K_1-\frac{K_3}{C_{h_\delta}}\frac{\partial C_h}{\partial\alpha_t}\frac{x_t}{V}\left(\frac{d\epsilon}{d\alpha}+\frac{1}{\sqrt{\eta_t}}\right)$
K_2^0	$K_2+\frac{K_3}{C_{h_\delta}}\frac{\partial C_h}{\partial\alpha_t}\left(1-\frac{d\epsilon}{d\alpha}-\frac{dC_L}{d\alpha}\frac{\rho S}{2m}\frac{x_t}{\sqrt{\eta_t}}\right)$
K_3^0	$\frac{1}{C_{h_\delta}}K_3$
K_5^0	$\frac{\frac{dC_L}{d\alpha}q}{W/S}K_3^0$

The $\frac{A_2}{A_1}\ddot{\delta}$ term in equation (8) was found to be small and is omitted in the subsequent derivation.

Substituting the results from equation (8) into equation (4) yields another form expressing the relation between measured load-factor increment and elevator angle as

$$\ddot{n}+K_1\dot{n}+K_2\Delta n=K_7\Delta\delta+K_8\dot{\delta}\tag{9}$$

where (see table I) K_7 and K_8 are now different forms of the effective control power coefficients.

HINGE MOMENT

The coefficients K_1 to K_8 occurring in equations (4), (6), and (9) are those associated with the measured elevator-motion case. The use of the relation

$$C_h=\frac{\partial C_h}{\partial \delta}\Delta\delta+\frac{\partial C_h}{\partial \alpha_t}\Delta\alpha_t \tag{10}$$

gives the solution for $\Delta\delta$ as

$$\Delta\delta=\frac{1}{\frac{\partial C_h}{\partial \delta}}\left(C_h-\frac{\partial C_h}{\partial \alpha_t}\Delta\alpha_t\right) \tag{11}$$

The increment in tail angle of attack to be substituted in equation (11) is given by

$$\Delta\alpha_t=\left[\Delta\alpha\left(1-\frac{d\epsilon}{d\alpha}-\frac{dC_L}{d\alpha}\frac{\rho}{2}\frac{S}{m}\frac{x_t}{\sqrt{\eta_t}}\right)-\dot{\alpha}\frac{x_t}{V}\left(\frac{d\epsilon}{d\alpha}+\frac{1}{\sqrt{\eta_t}}\right)\right] \tag{12}$$

so that

$$\Delta\delta=\frac{1}{C_{h_\delta}}\left\{C_h-\frac{\partial C_h}{\partial \alpha_t}\left[\Delta\alpha\left(1-\frac{d\epsilon}{d\alpha}-\frac{dC_L}{d\alpha}\frac{\rho}{2}\frac{S}{m}\frac{x_t}{\sqrt{\eta_t}}\right)-\dot{\alpha}\frac{x_t}{V}\left(\frac{d\epsilon}{d\alpha}+\frac{1}{\sqrt{\eta_t}}\right)\right]\right\} \tag{13}$$

In order to shorten the subsequent derivation for the hinge-moment case, the term $K_4\dot{\delta}$ in equation (4) and its counterparts in equations (6) and (9) are omitted. This effect is usually small; however, each individual case should be examined to see whether the term warrants dropping.

A substitution of the value of $\Delta\delta$ given by equation (13) into equations (4), (6), and (9) gives the following three differential equations for the same combination of variables with C_h and its integral replacing $\Delta\delta$:

$$\ddot{\alpha}+K_1^0\dot{\alpha}+K_2^0\Delta\alpha=K_3^0C_h \tag{14}$$

$$\ddot{\theta}+K_1^0\dot{\theta}+K_2^0\Delta\theta=K_3^0C_h+\frac{gK_5^0}{V}\int_0^t C_h\,dt \tag{15}$$

$$\ddot{n}+K_1^0\dot{n}+K_2^0\Delta n=K_5^0C_h \tag{16}$$

INTEGRAL FORM OF EQUATIONS

Although equations (4), (6), (9) and (14), (15), (16) could be used to evaluate the effective K coefficients from flight measurements of $\Delta\alpha$, $\dot{\theta}$, and Δn together with measurements of elevator angle, stick force, or hinge moment, it is seen that several differentiations of the measured data would be required. Inasmuch as a numerical differentiation process is inherently more inaccurate than the corresponding integration process, the preceding equations are changed and rearranged so that either $\Delta\alpha$, $\dot{\theta}$, or Δn, which are to be the measured values, appear as separate quantities on one side of the equation and the operations on these quantities appear on the other side. In integral form the rearranged equations are

$$K_1\int_0^t\Delta\alpha\,dt+K_2\int_0^t\int_0^\tau\Delta\alpha\,d\tau\,dt-K_3\int_0^t\int_0^\tau\Delta\delta\,d\tau\,dt-K_4\int_0^t\Delta\delta\,dt=-\Delta\alpha \tag{17}$$

$$K_1\theta+K_2\int_0^t\theta\,dt-K_5\int_0^t\Delta\delta\,dt-K_6\int_0^t\int_0^\tau\Delta\delta\,d\tau\,dt=-\dot{\theta} \tag{18}$$

$$K_1\int_0^t\Delta n\,dt+K_2\int_0^t\int_0^\tau\Delta n\,d\tau\,dt-K_7\int_0^t\int_0^\tau\Delta\delta\,d\tau\,dt-K_8\int_0^t\Delta\delta\,dt=-\Delta n \tag{19}$$

$$K_1^0\int_0^t\Delta\alpha\,dt+K_2^0\int_0^t\int_0^\tau\Delta\alpha\,d\tau\,dt-K_3^0\int_0^t\int_0^\tau C_h\,d\tau\,dt=-\Delta\alpha \tag{20}$$

$$K_1^0\theta+K_2^0\int_0^t\theta\,dt-K_3^0\int_0^t C_h\,dt-K_5^0\frac{g}{V}\int_0^t\int_0^\tau C_h\,d\tau\,dt=-\dot{\theta} \tag{21}$$

$$K_1^0\int_0^t\Delta n\,dt+K_2^0\int_0^t\int_0^\tau\Delta n\,d\tau\,dt-K_5^0\int_0^t\int_0^\tau C_h\,d\tau\,dt=-\Delta n \tag{22}$$

In principle to solve any one of these equations for the K coefficients, it is only necessary to tabulate the recorded values of the two basic variables (for example, in equation (19) the values of Δn and $\Delta\delta$) at a number of points t_1, t_2, t_3, and so forth along a given time history and to perform the indicated integrations from $t=0$ up to the time of the recorded value t_i. A number of simultaneous equations containing the unknown K's result which are then solved. The number of equations can vary from a minimum, in which the number of ordinates is equal to the number of unknown K's, to the case where there are more equations than unknowns. When the number of ordinates equals the number of unknown K's, the usual methods of solving simultaneous equations may be used to obtain the K's; however, when there are more equations than unknowns, a least-squares method is required to reduce the equations. Since the best average value of the K's is obtained when many points along the time history are used, a least-squares procedure is generally preferable.

Although the integration indicated in equations (17) to (22) can actually be performed graphically from the time histories, it is deemed better to express the equations in matrix form in order to enable a complete numerical solution to be made.

MATRIX FORM OF EQUATIONS

Since the derivation in matrix form for any one of equations (17) to (22) is the same as for any other equation, only equation (19), involving measured load factor and elevator angles, is used. In matrix form the system of simultaneous equations obtained from reading the time history of the load factor n against elevator angle δ in an arbitrary pull-up may be written

$$\left\|\begin{matrix} \int_0^{t_1}\Delta n\,dt & \int_0^{t_1}\int_0^{\tau}\Delta n\,d\tau\,dt & -\int_0^{t_1}\int_0^{\tau}\Delta\delta\,d\tau\,dt & -\int_0^{t_1}\Delta\delta\,dt \\ \int_0^{t_2}\Delta n\,dt & \int_0^{t_2}\int_0^{\tau}\Delta n\,d\tau\,dt & -\int_0^{t_2}\int_0^{\tau}\Delta\delta\,d\tau\,dt & -\int_0^{t_2}\Delta\delta\,dt \\ \int_0^{t_3}\Delta n\,dt & \int_0^{t_3}\int_0^{\tau}\Delta n\,d\tau\,dt & -\int_0^{t_3}\int_0^{\tau}\Delta\delta\,d\tau\,dt & -\int_0^{t_3}\Delta\delta\,dt \\ \int_0^{t_4}\Delta n\,dt & \int_0^{t_4}\int_0^{\tau}\Delta n\,d\tau\,dt & -\int_0^{t_4}\int_0^{\tau}\Delta\delta\,d\tau\,dt & -\int_0^{t_4}\Delta\delta\,dt \\ \cdot & \cdot & \cdot & \cdot \end{matrix}\right\| \begin{Bmatrix} K_1 \\ K_2 \\ K_7 \\ K_8 \end{Bmatrix} = \begin{Bmatrix} -\Delta n_1 \\ -\Delta n_2 \\ -\Delta n_3 \\ -\Delta n_4 \\ \cdot \end{Bmatrix} \tag{23}$$

In shorter form this expression may be rewritten as

$$\|A\| \begin{Bmatrix} K_1 \\ K_2 \\ K_7 \\ K_8 \end{Bmatrix} = \{-\Delta n_i\} \tag{24}$$

where the matrix $\|A\|$ is in general a rectangular matrix; that is, for every time t_i, one equation or one row of the matrix $\|A\|$ is obtained. The individual elements of matrix $\|A\|$ are evaluated from the known values of incremental load factor and incremental elevator angle. As mentioned previously, the integration may be performed graphically but in the present case, use is made of the integrating matrices derived in reference 4. Thus, any element in the rectangular matrix (equation (23)) such as $\int_0^t \Delta n\,dt$ or $\int_0^t\int_0^{\tau}\Delta n\,d\tau\,dt$ may be expressed in matrix form as follows:

$$\left\{\int_0^{t_i}\Delta n\,dt\right\} = \|C_1\|\,\{\Delta n_i\} \tag{25}$$

$$\left\{\int_0^{t}\int_0^{\tau}\Delta n\,d\tau\,dt\right\} = \|C_1\|\left\{\int_0^{t}\Delta n\,dt\right\}$$

The integrating matrix $\|C_1\|$ as derived in reference 4 is given in table II, with a time interval $\Delta t=0.1$ second. It should be noted that a sufficient number of time intervals within the natural period being computed must be chosen to give a solution; usually the shorter the time interval chosen for the integrating matrix, the more accurate will be the final solution.

After the elements of the matrix A (equations (23) and (24)) have been determined either by applying the integrating matrix or by graphical integration, the method of least squares is applied to the solution of the system of simultaneous equations. In matrix notation the least-squares solution involves multiplication of matrix A by its transpose A' so that equation (24) becomes

$$[A'A]\,\{K_i\} = \{-A'\Delta n_i\} \tag{26}$$

where the matrix $[A'A]$ would be a 4 by 4 matrix for equations (18) and (19). Equation (26) can now be arranged to be solved directly for the K's by multiplying by the inverse matrix $[A'A]^{-1}$ so that finally

$$\begin{Bmatrix} K_1 \\ K_2 \\ K_7 \\ K_8 \end{Bmatrix} = [A'A]^{-1}\{-A'\Delta n_i\} \tag{27}$$

Alternately the system of simultaneous equations represented by equation (26) can be solved for the values of K by any of the well-known methods of solving sets of simultaneous equations, that is, by eliminating the variables or by using Crout's method (reference 5). The derivation in matrix form of any of the other equations from (17) to (22) is similar to the plan given for equation (19) and, therefore, is not given.

FREQUENCY RESPONSE

As first derived by Cornell Aeronautical Laboratory (reference 6), the frequency response was measured by

TABLE II.—INTEGRATING MATRIX $[C_1]$

[Based on 0.1-sec intervals]

t	0	0.1	0.2	0.3	0.4	0.5	0.6	0.7	0.8	0.9
0	0	0	0	0	0	0	0	0	0	--------
.1	.041667	.066667	−.008333	0	0	0	0	0	0	--------
.2	.033333	.133333	.033333	0	0	0	0	0	0	--------
.3	.033333	.133333	.075000	.066667	−.008333	0	0	0	0	--------
.4	.033333	.133333	.066667	.133333	.033333	0	0	0	0	--------
.5	.033333	.133333	.066667	.133333	.075000	.066667	−.008333	0	0	--------
.6	.033333	.133333	.066667	.133333	.066667	.133333	.033333	0	0	--------
.7	.033333	.133333	.066667	.133333	.066667	.133333	.075000	.066667	−.008333	--------
.8	.033333	.133333	.066667	.133333	.066667	.133333	.066667	.133333	.033333	--------
.9	.033333	.133333	.066667	.133333	.066667	.133333	.066667	.133333	.075000	--------
1.0	.033333	.133333	.066667	.133333	.066667	.133333	.066667	.133333	.066667	--------
1.1	.033333	.133333	.066667	.133333	.066667	.133333	.066667	.133333	.066667	--------
1.2	.033333	.133333	.066667	.133333	.066667	.133333	.066667	.133333	.066667	--------
1.3	.033333	.133333	.066667	.133333	.066667	.133333	.066667	.133333	.066667	--------
1.4	.033333	.133333	.066667	.133333	.066667	.133333	.066667	.133333	.066667	--------
1.5	.033333	.133333	.066667	.133333	.066667	.133333	.066667	.133333	.066667	--------
1.6	--------	--------	--------	--------	--------	--------	--------	--------	--------	--------
1.7	--------	--------	--------	--------	--------	--------	--------	--------	--------	--------

actually subjecting the airplane to sinusoidal elevator motions of various frequencies by means of specially constructed apparatus. From these results the coefficients K_1, K_2, and so forth, which are significant in control and loads work, could be determined provided the equation of motion was assumed.

In the present instance since the coefficients K_1 and K_2 are determined directly from the equation of motion, the corresponding relations are given so that the frequency response, which is significant in the design of stable autopilot systems, can also be determined.

When a sinusoidal elevator motion has been assumed, then equation (9), omitting the minor effects of $K_8\dot{\delta}$, becomes

$$\ddot{n}+K_1\dot{n}+K_2\,\Delta n=K_7\bar{\delta}\sin\omega t \tag{28}$$

where Δn is the load-factor increment and ω is the angular velocity of the elevator. Since equation (28) is a linear equation with constant coefficients, the steady-state solutions are of the form

$$\left.\begin{aligned} n&=\bar{n}\sin(\omega t+\phi)\\ \dot{n}&=\bar{n}\omega\cos(\omega t+\phi)\\ \ddot{n}&=-\bar{n}\omega^2\sin(\omega t+\phi)\end{aligned}\right\} \tag{29}$$

By a substitution of these relations into equation (28) the following equation is obtained:

$$-\bar{n}\omega^2\sin(\omega t+\phi)+K_1\bar{n}\omega\cos(\omega t+\phi)+K_2\bar{n}\sin(\omega t+\phi)=K_7\bar{\delta}\sin\omega t \tag{30}$$

which may be rewritten as

$$\bar{n}(K_2-\omega^2)\sin(\omega t+\phi)+K_1\bar{n}\omega\cos(\omega t+\phi)=K_7\bar{\delta}\sin\omega t \tag{31}$$

or

$$B\sin(\omega t+\phi+\epsilon)=K_7\bar{\delta}\sin\omega t \tag{32}$$

where

$$B=K_7\bar{\delta}=\bar{n}\sqrt{(K_2-\omega^2)^2+(K_1\omega)^2} \tag{33}$$

and

$$-\epsilon=\phi=\tan^{-1}\frac{-K_1\omega}{K_2-\omega^2} \tag{34}$$

From equation (33) the amplitude ratio of load factor to elevator angle is seen to be

$$\left|\frac{\bar{n}}{\bar{\delta}}\right|=\frac{K_7}{\sqrt{(K_2-\omega^2)^2+(K_1\omega)^2}} \tag{35}$$

and the phase angle at various frequencies is given by equation (34).

In the present case the values of K_1, K_2, and K_7 would have been derived from the flight measurements and the values of ω would be assigned.

For the measured hinge-moments case the values of K_1^0 and K_2^0 would be used instead of K_1 and K_2, and so forth. The complete frequency-response relations and transfer functions including all derivatives and integral of δ for equations (4), (6), and (9) are given in the appendix.

DETERMINATION OF AERODYNAMIC DERIVATIVES

The various K coefficients determined from the measured values may be termed effective coefficients and include, to some extent, effects of some nonlinearities, elasticity and effects of other variables which are omitted in the usual analysis. In addition, as may be seen from table I, the K coefficients are combinations of various quantities involving known geometric qualities, the conditions of the problem as well as aerodynamic derivatives. The stability coefficients given in table I are expressed in a form suitable to loads work. In usual stability calculations, these coefficients are generally expressed in a simpler form where the number of aerodynamic variables are reduced and, as a result, the coefficients are more easily approximated.

A total of 10 aerodynamic variables $\frac{dC_L}{d\alpha}$, $\frac{dC_m}{d\alpha}$, $\frac{d\epsilon}{d\alpha}$, $\frac{dC_{L_t}}{d\alpha_t}$, $\frac{dC_{L_t}}{d\delta}$, $\frac{dC_{m_t}}{d\delta}$, $\frac{\partial C_h}{\partial\alpha_t}$, $\frac{\partial C_h}{\partial\delta}$, η_t, and K appear in the definitions of the coefficients of table I. Although all the aerodynamic derivatives cannot be determined directly from the four basic coefficients (namely, K_1, K_2, K_3, and K_4), engineering approximations of the more significant derivatives can be obtained if values are assigned to either some of the more accurately known derivatives or to those factors having least influence on the problem.

The factors having the least influence on the problem are K, η_t, and the derivative $\frac{dC_{m_t}}{d\delta}$ which, respectively, allow for the contribution of wing-fuselage damping, tail efficiency, and moment due to tail camber to which average values can be assigned. A representative value of K is 1.25. Representative values of η_t range from about 1.2 to 0.8 with the higher limit applying to propeller-driven airplanes operating at low speed and full power and the lower limit applying at high speed with the propeller braking. An average value for jets or at zero thrust for propeller-driven airplanes is about 0.9. A representative value of $\frac{dC_{m_t}}{d\delta}$ can be obtained from existing wind-tunnel data or by using theoretical methods; -0.5 is an average value for tail surfaces.

Since, as may be seen from table I, K_4 is directly proportional to $\frac{dC_{L_t}}{d\delta}$, an effective value of this derivative can be determined directly from the definition of K_4.

In order to determine consistent values of the remaining significant aerodynamic derivatives $\frac{dC_L}{d\alpha}$, $\frac{dC_m}{d\alpha}$, $\frac{d\epsilon}{d\alpha}$, $\frac{dC_{L_t}}{d\alpha_t}$, $\frac{dC_h}{d\alpha_t}$, and $\frac{dC_h}{d\delta}$, further values must be assigned to several of the remaining derivatives. The derivatives chosen would naturally be those for which values could be obtained from other sources with the greatest degree of accuracy.

EXAMPLES

In order to illustrate the foregoing method as well as the consistency of results obtained with different sets of instrumentation, typical examples are given using data obtained from three flights (referred to as flight 1, flight 2, and flight 3) of a high-speed medium jet bomber. For flight 1, the method of a computation is obtained in sufficient detail to enable a reader not too familiar with the mathematical details to reproduce similar results. Flight 1 is further divided into case I where data for Δn and $\Delta\delta$ are used and case II where data for $\dot{\theta}$ and $\Delta\delta$ are used. References 7 and 8 may be consulted for introductory discussions of least-squares and matrix methods.

Figure 2 shows the measured time histories of velocity, altitude, incremental elevator displacement, incremental load factor, and incremental pitching velocity obtained during a push-down pull-up maneuver. By means of the values from figure 2, increments in load factor and elevator angle at 0.1-second intervals have been tabulated in columns 2 and 3 of table III. The elements of the A matrix (equations (23) and (24)) are given in columns 4 to 7 of table III. Each element in these columns has been determined by performing the indicated integrations on the results given in columns 2 and 3. In this instance the integrations have been performed by use of the previously mentioned integrating matrix derived in reference 4. This method is particularly

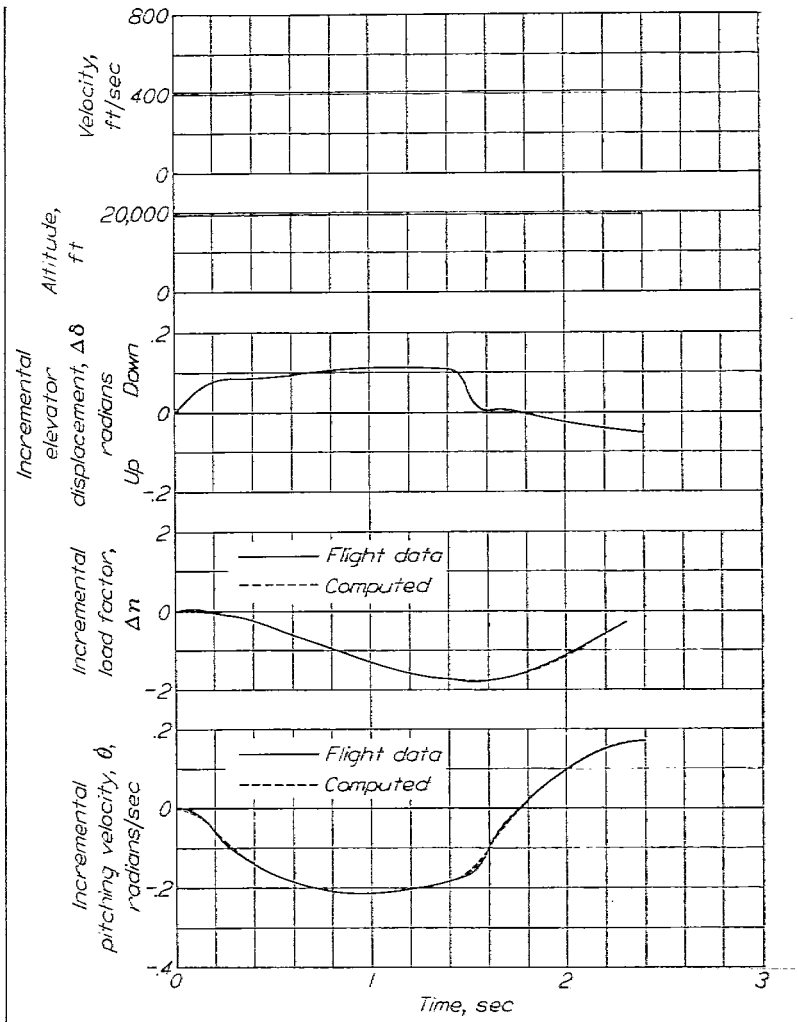

FIGURE 2.—Time histories of velocity, altitude, incremental elevator displacement, incremental load factor (computed and measured), and incremental pitching velocity (computed and measured) for flight 1 at Mach number 0.40.

suitable when automatic computing machines are available.

The elements of matrix A (equation (23)) which are given in columns 4 to 7 of table III indicate that with the Δt spacing used there are 23 equations involving the four unknown values of K. In order to obtain the least-squares solution of these equations, the transpose $||A||'$ of matrix $||A||$ is required. The transpose matrix is obtained by interchanging the rows and columns of matrix $||A||$.

The product of the 4-row, 23-column transpose matrix by the 23-row, 4-column original matrix yields the 4-row, 4-column matrix in the coefficients of K_i. The resulting four simultaneous equations are then solved by any of the well-known methods of solving sets of simultaneous equations.

By performing the preceding operations, the following values of K were obtained from the data listed in table III:

K_1	K_2	K_7	K_8
3.314221	7.339706	−119.553905	5.819025

In order to show how well these computed values of K represent the original data, they have been reinserted into equation (19) along with the measured values of $\Delta\delta$ to determine calculated values of Δn. The computed curve is given by the dashed line in figure 2 of the plot of Δn against t.

TABLE III.—TABULATED VALUES FOR FLIGHT 1

1	2	3	4	5	6	7
Time, t (sec)	Acceleration increment, Δn	Elevator angle increment, $\Delta\delta$ (radians)	$\int_0^t \Delta n\, dt$	$\int_0^t \int_0^\tau \Delta n\, d\tau\, dt$	$-\int_0^t \int_0^\tau \Delta\delta\, d\tau\, dt$	$-\int_0^t \Delta\delta\, dt$
0	0	0	0	0	0	0
.1	.054	.046687	.004050	.000225	−.000091	−.002465
.2	−.054	.077666	.005400	.000720	−.000622	−.008814
.3	−.111	.082902	−.002133	.000967	−.001903	−.016868
.4	−.254	.085084	−.019667	−.000040	−.004008	−.025292
.5	−.444	.089010	−.054950	−.003632	−.006969	−.033990
.6	−.588	.093810	−.106933	−.011587	−.010821	−.043124
.7	−.784	.098610	−.175658	−.025559	−.015610	−.052741
.8	−.965	.103846	−.263233	−.047347	−.021386	−.062860
.9	−1.122	.106900	−.367483	−.078747	−.028197	−.073405
1.0	−1.291	.109081	−.488033	−.121386	−.036076	−.084211
1.1	−1.462	.108645	−.626166	−.176978	−.045041	−.095094
1.2	−1.575	.108645	−.778500	−.247093	−.055094	−.105954
1.3	−1.704	.108645	−.943233	−.333111	−.066233	−.116830
1.4	−1.739	.107336	−1.116166	−.436013	−.078457	−.127640
1.5	−1.837	.053668	−1.296083	−.556599	−.091666	−.135661
1.6	−1.801	.003491	−1.479099	−.695333	−.105416	−.138490
1.7	−1.700	.004300	−1.654399	−.852104	−.119294	−.138995
1.8	−1.569	−.004799	−1.818099	−1.025826	−.133202	−.139086
1.9	−1.305	−.017017	−1.961174	−1.214978	−.147063	−.137970
2.0	−1.116	−.026179	−2.081599	−1.417305	−.160760	−.135785
2.1	−.869	−.036651	−2.181332	−1.630682	−.174186	−.132600
2.2	−.564	−.041887	−2.253466	−1.852652	−.187254	−.128629
2.3	−.315	−.045814	−2.296799	−2.080341	−.199905	−.124284

The same process as was used for the relations of Δn and $\Delta\delta$ was also applied to the relations of $\dot{\theta}$ and $\Delta\delta$ shown in figure 2. The tabular material corresponding to table III is not included; the values of K obtained, however, were as follows:

K_1	K_2	K_5	K_6
3.13167	8.4123	−7.6212	−12.1967

These values of K when reinserted into equation (18) resulted in the computed curve of $\dot{\theta}$ given by the dashed curve of figure 2.

In addition to the preceding computations, several push-down pull-up maneuvers, made under similar conditions of altitude, weight, and center-of-gravity positions, were analyzed to obtain the variation of several of the computed K's with Mach number. In this analysis only, the measurements of Δn and $\Delta\delta$ were used. The results obtained for three Mach numbers are shown in figure 3. The short parts of the curves shown are the expected variations in the K's. Table I shows that K_1 should vary linearly with speed and the other values of K should vary parabolically. The curves shown are merely guides adjusted to pass through zero and through the value of K at the 0.45 Mach number point.

The values of K_1 and K_2 shown in figure 3 were also inserted into equations (34) and (35) to determine the corresponding curves of frequency response. The results are given in figure 4.

In addition the values of K_1, K_2, and frequency response for case I have been computed by using the definitions of table I and aerodynamic derivatives obtained from wind-tunnel tests. These results are also shown in figures 3 and 4. The aerodynamic derivatives were listed in an unpublished report by the North American Aviation, Inc. and were obtained in the Southern California Cooperative Wind Tunnel.

DISCUSSION

If only the frequency response is desired, it can be determined without recourse to the equations of motion; however, if the stability coefficients are desired, it will be necessary to use the equations of motion as has been done in the present report. For either case several mathematical methods are available (references 1, 2, and 6) to obtain these required quantities and all methods, if carried far enough, should yield similar results. Thus, the present method is basically no more accurate than any other method; however, it has the advantage of simple instrumentation and experimental procedures but may require more extensive computation.

As with other methods where linearity is a basic assumption, most consistent results are to be expected when the maneuvers are confined to the angle-of-attack region where linearity exists. In order for the outlined mathematical procedures to succeed, the maneuvers should cover as much of the linear range as possible in a short period of time and the portion of the maneuver considered should be confined to that portion where the integrals are increasing. This practice insures that the elements of the original matrix A are all different and that the subsequent least-squares matrix $[A'A]$ is not ill-behaved. Enough of the response time history should be taken to cover a good portion of the natural period of the system. A point worth noting in connection with the use of the equations is that zero time is assumed as being at the start of the maneuver when the airplane is in steady flight. Since the present method is not restricted by the final condition, it offers the possibility of performing an analysis on fragments of curves with the result that any variations in the constants may be determined. In such an analysis two possibilities occur: (1) where the fragments considered start from a fixed initial condition and

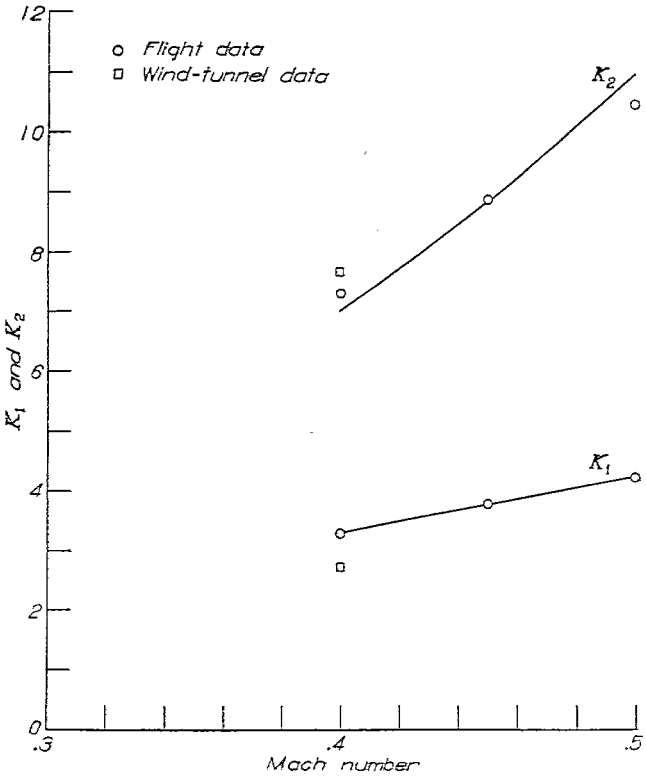

FIGURE 3.—Variations of K_1 and K_2 with Mach number.

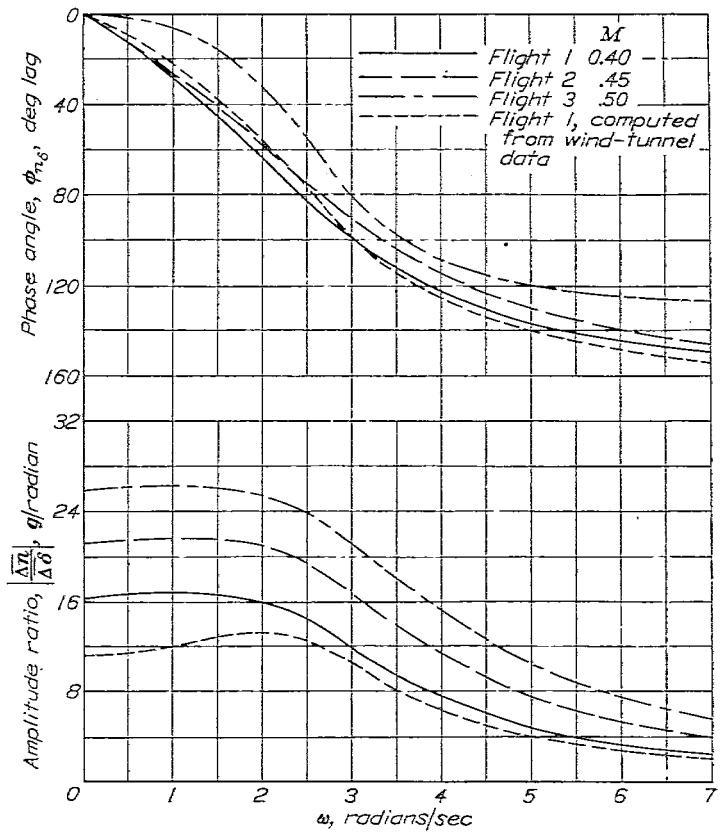

FIGURE 4.—Airplane frequency response.

become successively longer, and (2) where the fragments are taken as consecutive. In the first case, the present method may be applied without any modification; in the second case, the equations must be altered to introduce the initial conditions for each fragment. These possibilities have not, however, been explored.

In the derivation given herein, lag in downwash has been included (see equation (2)) but unsteady lift effects have not. References 9 and 10 show that for the present purposes the inaccuracy of omitting unsteady flow effects, except downwash lag, is probably no greater than the inaccuracies in the original assumptions or of the experimental data.

Other terms and other combinations of measurements might have been included in the derivations given—for instance, the equations are readily adapted to measurement of tail load and either airplane load factor, airplane angle of attack, or pitching angular velocity. Additional terms may have been included to account for flexibility. Also it is possible, as for example in the case of the hinge-moment relations, to include additional terms to account for elevator moment-of-inertia effect, rate of elevator motion, and so forth in order to make the methods more inclusive. The inclusion of these further terms, however, generally requires additional K's to be evaluated and would only be justified when the assumptions implied in the basic equations of motion can be more closely approached and when the accuracy of measurements is high. Although the method had been applied herein to second-order differential equations, it may be extended to higher-order equations with the limitation that too many integrations destroy the conditioning of the equations used in determining the coefficients (equation (26)) and make the equations difficult to work with.

The results of the sample computations in which two different sets of instrumentation were used indicate an average difference between the respective K coefficients of about 10 percent. The use of a least-squares method permits calculation of a probable error, which is an indication of how well the second-order system and the coefficients (computed on the basis of 0.1-second time intervals) fit the data. The expression used in computing the probable error is

$$K_i = 0.6745\sqrt{\frac{\Sigma E^2}{N-\kappa}}\sqrt{B_{ii}}$$

where B_{ii} is the main diagonal term of $[A'A]^{-1}$, E is the difference between the computed and measured value of the variable, N is the number of cases considered in the least-squares procedure, and κ is the number of variables determined. This probable error has been calculated for case I and case II and indicates an error of ± 0.3 in K_1 and ± 0.5 in K_2 for the computations in which the accelerometer measurements were used. These values are contrasted with probable errors of ± 0.1 and ± 0.3 for the pitching-angular-velocity measurements. These probable errors are associated with the very small differences between the solid-line

and dashed-line curves shown in figure 2. Greater accuracy may be obtained by increasing instrument accuracy, record-reading accuracy, and correcting original data for instrument errors. Further accuracy in the method may always be attained by using smaller time intervals.

The results shown in figure 3 for the three flights investigated give some idea of the scatter to be expected between runs as well as the variation of the coefficients K_1 and K_2 with Mach number. As might be expected from the definition, K_1 is seen to vary linearly with Mach number with little scatter. On the other hand, the values of K_2 either indicate a linear variation with Mach number or a scatter about the expected parabolic variation.

The computed values of K_1 and K_2 (fig. 3) obtained from the wind-tunnel data are in fair agreement with the flight-test values. For many engineering purposes this agreement may be adequate and probably typical of what might be expected if wind-tunnel data were used at the design stage. Since all of the K's are defined in table I, the dynamic longitudinal characteristics of an aircraft may be estimated in the design stage by computing the K's and inserting the values in the frequency-response relations given in the appendix.

CONCLUDING REMARKS

A matrix method has been presented for determining the longitudinal-stability coefficients and frequency response of an aircraft from an analysis of arbitrary maneuvers in which simple instrumentation is used. Errors in instrument accuracy and probable errors due to the use of a least-squares method are briefly discussed. Possible improvements in the method are discussed but, as of the present, it appears improvements would be justified only for those cases where the basic assumptions are closely approached and where instrument accuracy is high. The method is equally applicable to other problems which can be expressed by second-order differential equations.

LANGLEY AERONAUTICAL LABORATORY,
NATIONAL ADVISORY COMMITTEE FOR AERONAUTICS,
LANGLEY FIELD, VA., *December 15, 1950.*

APPENDIX

FREQUENCY-RESPONSE RELATIONS

In the body of the report the phase angles and amplitude ratio were given for only the simplest case. The complete frequency-response relations and transfer functions for the equations involving δ and its derivatives are now presented. If D represents the differential operator d/dt, then the steady-state response due to a sinusoidal forcing function can be obtained by substituting $i\omega$ for D in the transfer function. The following relations were developed by this procedure:

Equation	Transfer Function	Phase Angle	Amplitude Ratio
$\ddot{\alpha}+K_1\dot{\alpha}+K_2\Delta\alpha=K_3\Delta\delta+K_4\dot{\delta}$	$\frac{\Delta\alpha}{\Delta\delta}=\frac{K_3+K_4D}{D^2+K_1D+K_2}$	$\phi_{\alpha_\delta}=\tan^{-1}\frac{-K_1\omega}{K_2-\omega^2}+\tan^{-1}\frac{K_4\omega}{K_3}$	$\left\lvert\frac{\Delta\alpha}{\Delta\delta}\right\rvert=\sqrt{\frac{K_3^2+K_4\omega^2}{(K_2-\omega^2)^2+K_1^2\omega^2}}$
$\ddot{\alpha}+K_1\dot{\alpha}+K_2\Delta\alpha=K_3\Delta\delta$	$\frac{\Delta\alpha}{\Delta\delta}=\frac{K_3}{D^2+K_1D+K_2}$	$\phi_{\alpha_\delta}=\tan^{-1}\frac{-K_1\omega}{K_2-\omega^2}$	$\left\lvert\frac{\Delta\alpha}{\Delta\delta}\right\rvert=\frac{K_3}{\sqrt{(K_2-\omega^2)^2+K_1^2\omega^2}}$
$\ddot{\theta}+K_1\dot{\theta}+K_2\Delta\theta=K_5\Delta\delta+K_6\int_0^t\Delta\delta\,dt$	$\frac{\Delta\theta}{\Delta\delta}=\frac{K_5D+K_6}{D(D^2+K_1D+K_2)}$	$\phi_{\theta_\delta}=\tan^{-1}\frac{K_2-\omega^2}{K_1\omega}+\tan^{-1}\frac{K_5\omega}{K_6}$	$\left\lvert\frac{\Delta\theta}{\Delta\delta}\right\rvert=\sqrt{\frac{K_6^2+K_5^2\omega^2}{\omega^2[K_1^2\omega^2+(K_2-\omega^2)^2]}}$
$\ddot{n}+K_1\dot{n}+K_2\Delta n=K_7\Delta\delta+K_8\dot{\delta}+K_9\ddot{\delta}$	$\frac{\Delta n}{\Delta\delta}=\frac{K_7+K_8D+K_9D^2}{D^2+K_1D+K_2}$	$\phi_{n_\delta}=\tan^{-1}\frac{-K_1\omega}{K_2-\omega^2}+\tan^{-1}\frac{K_8\omega}{K_7-K_9\omega^2}$	$\left\lvert\frac{\Delta n}{\Delta\delta}\right\rvert=\sqrt{\frac{K_8^2\omega^2+(K_7-K_9\omega^2)^2}{(K_2-\omega^2)^2+K_1^2\omega^2}}$
$\ddot{n}+K_1\dot{n}+K_2\Delta n=K_7\Delta\delta+K_8\dot{\delta}$	$\frac{\Delta n}{\Delta\delta}=\frac{K_7+K_8D}{D^2+K_1D+K_2}$	$\phi_{n_\delta}=\tan^{-1}\frac{-K_1\omega}{K_2-\omega^2}+\tan^{-1}\frac{K_8\omega}{K_7}$	$\left\lvert\frac{\Delta n}{\Delta\delta}\right\rvert=\sqrt{\frac{K_8^2\omega^2+K_7^2}{(K_2-\omega^2)^2+K_1^2\omega^2}}$
$\ddot{n}+K_1\dot{n}+K_2\Delta n=K_7\Delta\delta$	$\frac{\Delta n}{\Delta\delta}=\frac{K_7}{D^2+K_1D+K_2}$	$\phi_{n_\delta}=\tan^{-1}\frac{-K_1\omega}{K_2-\omega^2}$	$\left\lvert\frac{\Delta n}{\Delta\delta}\right\rvert=\frac{K_7}{\sqrt{(K_2-\omega^2)^2+K_1^2\omega^2}}$

REFERENCES

1. LaVerne, Melvin E., and Boksenbom, Aaron S.: Frequency Response of Linear Systems From Transient Data. NACA Rep. 977, 1950. (Supersedes NACA TN 1935.)
2. Curfman, Howard J., Jr., and Gardiner, Robert A.: Method for Determining the Frequency-Response Characteristics of an Element or System From the System Transient Output Response to a Known Input Function. NACA Rep. 984, 1950. (Supersedes NACA TN 1964.)
3. Pearson, Henry A.: Derivation of Charts for Determining the Horizontal Tail Load Variation with Any Elevator Motion. NACA Rep. 759, 1943. (Supersedes NACA ARR, Jan. 1943.)
4. Diederich, Franklin W.: Calculation of the Aerodynamic Loading of Swept and Unswept Flexible Wings of Arbitrary Stiffness. NACA Rep. 1000, 1950. (Supersedes NACA TN 1876.)
5. Crout, Prescott D.: A Short Method for Evaluating Determinants and Solving Systems of Linear Equations with Real or Complex Coefficients. Trans. A.I.E.E., vol. 60, 1941, pp. 1235–1240.
6. Campbell, G. F., Whitcomb, D.W., and Breuhaus, W. O.: Dynamic Longitudinal Stability and Control Flight Tests of a B-25J Airplane. Forced Oscillation and Step Function Response Methods, Utilizing an A-12 Automatic Pilot. Rep. No. TB-405-F-3, Cornell Aero. Lab., Inc., April 15, 1947.
7. Reddick, H. W., and Miller, F. H.: Advanced Mathematics for Engineers. Second ed., John Wiley & Sons, Inc., 1947, pp. 369–376.
8. Frazer, R. A., Duncan, W. J., and Collar, A. R.: Elementary Matrices and Some Applications to Dynamics and Differential Equations. The Macmillan Co., 1946.
9. Statler, Irving C.: Derivation of Dynamic Longitudinal Stability Derivatives for Subsonic Compressible Flow From Non-Stationary Flow Theory and Application to an F-80A Airplane. Tech. Rep. No. 5776, ATI No. 55414, Air Matériel Command, U. S. Air Force, May 1949.
10. Statler, I. C., and Easterbrook, M.: Handbook for Computing Non-Stationary Flow Effects on Subsonic Dynamic Longitudinal Response Characteristics of an Airplane. Rep. No. TB-495-F-12, Cornell Aero. Lab., Inc., March 1, 1950.