REPORT 1093

HEAT TRANSFER TO BODIES IN A HIGH-SPEED RAREFIED-GAS STREAM

By Jackson R. Stalder, Glen Goodwin, and Marcus O. Creager [1]

SUMMARY

The equilibrium temperature and heat-transfer coefficients for transverse cylinders in a high-speed stream of rarefied gas were measured over a range of Knudsen numbers (ratio of molecular-mean-free path to cylinder diameter) from 0.025 to 11.8 and for Mach numbers from 2.0 to 3.3. The range of free-stream Reynolds numbers was from 0.28 to 203.

The models tested were 0.0010-, 0.0050-, 0.030-, 0.051-, 0.080-, and 0.126-inch-diameter cylinders held normal to the stream.

For the case of high-speed flow of a rarefied gas about cylinders, the data indicate that fully developed free-molecule flow first occurs at Knudsen numbers of approximately 2.0 and the temperature-recovery factor depends primarily upon the Knudsen number. For Knudsen numbers greater than 0.2, the temperature-recovery factor exceeds a value of unity even though free-molecule flow may not be fully developed.

Over the range of conditions covered in the present tests, the Nusselt number is a function only of the Reynolds number if the viscosity and thermal conductivity are based upon stagnation temperature and the density based upon free-stream conditions. For free-molecule flow, the heat-transfer data are well correlated by the theory with the accommodation coefficient equal to 0.90.

INTRODUCTION

The subject of heat transfer to or from bodies in a high-speed rarefied gas stream has become of importance in aeronautics. The recent practical realization of missile flight at very high altitudes has stimulated interest in the subject. Also, in certain aspects of wind-tunnel testing, notably turbulence studies in supersonic wind tunnels by means of hot-wire anemometers, the effects of slip may not be negligible. (See, e. g., reference 1.)

The various phenomena encountered in high-speed flow of gases are often described in terms of the Reynolds number and the Mach number of the flow. The former parameter may be considered to be a measure of the effect of viscosity and the latter a measure of the effect of compressibility on the flow field.

When considering the flow of rarefied gases, however, an additional parameter, the Knudsen number, becomes important. The Knudsen number is defined as the ratio of the mean-free molecular path to a characteristic body dimension. This parameter, which is a measure of the degree of gas rarefaction, may also be construed as defining the importance of the effect of molecular motions on the flow field. When the Knudsen number is small (less than, say, 0.001), the effect of the molecular motions on the flow is negligible and, in this regime, the gas can be treated as a continuous medium. On the other hand, for large values of the Knudsen number (of the order of 10), the effect of molecular motions is all-important and the phenomena which occur can be completely described in terms of the motions of individual molecules—in a statistical sense, of course. By virtue of the well-established laws of molecular motions, this so-called "free-molecule" regime is readily susceptible to analysis and has been thoroughly examined (references 2 through 8) with respect to both aerodynamic and thermodynamic phenomena. Experimental work in this regime with respect to external flows (as opposed to flow in tubes) is, however, quite meager. The pioneer work of Epstein in 1924 (reference 3) was concerned with the measurement of the drag of spheres; the tests were confined to very low-speed motions. Recently, the drag and equilibrium temperature of a cylinder in high-speed free-molecule flow were reported in reference 8.

The regime of intermediate Knudsen numbers ($0.001<K<10$) is difficult to deal with analytically and, at this time, little success has been attained in attempts to analyze this portion of the field of fluid mechanics. Some progress has been made, however, by Chapman and Cowling (reference 9), Schamberg (reference 10), and Grad (reference 11).

The two general types of approach to the problem used by the above authors have been described by Uhlenbeck (reference 12). Briefly, the first approach consists of applying correction terms to the Navier-Stokes continuum equations and boundary conditions, the first approximation resulting in a set of higher-order equations—the Burnett equations. The other approach is to attempt to solve the Boltzmann equation for the molecular velocity distribution, which, in effect, results in obtaining correction terms to the Maxwell velocity distribution equation. Both of these methods are essentially perturbation methods. In the first approach solutions are obtained in terms of power series of the Knudsen number, while in the second method solutions are obtained in terms of the reciprocal of the Knudsen number. Both methods will fail for Knudsen numbers of the order of unity.

As in the case of free-molecule flows, little experimental work has been done in the intermediate regime for the case of high-speed external flows. However, Kane (reference 13) has reported results of drag tests on spheres in this regime.

[1] Supersedes NACA TN 2438, "Heat Transfer to Bodies in a High-Speed Rarefied-Gas Stream" by Jackson R. Stalder, Glen Goodwin, and Marcus O. Creager, 1951.

The general purpose of the research described in this paper was to study the heat-transfer processes that occur between a body and a high-speed rarefied gas stream. More particularly, it was hoped that the experimental data would yield two important results: first, the proper grouping of variables to obtain correlation of heat-transfer data in the analytically intractable "slip-flow" regime intermediate between the continuum and free-molecule regimes; and second, to define approximate values of the parameters which delineate the three regimes for the particular configuration used in these tests.

Experimental data were obtained on the heat transfer from circular cylinders in the three regimes of free-molecule, slip, and continuum flows. The data are compared at small values of Knudsen number with the data of reference 1 and for large values of Knudsen number, with the free-molecule analysis of reference 8.

NOTATION

c_p specific heat at constant pressure, foot-pounds per slug, °F

d cylinder diameter, feet

$f(s)$ dimensionless function of s defined by

$$f(s)=Z_1(s^2+3)+Z_2\left(s^2+\frac{7}{2}\right)$$

$g(s)$ dimensionless function of s defined by $g(s)=3(Z_1+Z_2)$

g gravitational acceleration, 32.2 feet per second squared

h heat-transfer coefficient, foot-pounds per square foot, second, °F

I_0 modified Bessel function of first kind and zero order

I_1 modified Bessel function of first kind and first order

K Knudsen number $\left(\frac{l}{d}\right)$, dimensionless

k Boltzmann constant, 5.66×10^{-24} foot-pounds per °F per molecule

l mean-free molecular path, feet

M Mach number $\left(\frac{U}{v_a}\right)$, dimensionless

Nu Nusselt number $\left(\frac{hd}{\kappa}\right)$, dimensionless

p static pressure, pounds per square foot

Pr Prandtl number $\left(c_p\frac{\mu}{\kappa}\right)$, dimensionless

Q heat transferred from body, foot-pounds per square foot, second

r temperature-recovery factor, defined by

$$T_e=T\left(1+\frac{\gamma-1}{2}rM^2\right), \text{ dimensionless}$$

R gas constant, foot-pounds per pound, °F absolute

Re Reynolds number $\left(\frac{Ud\rho}{\mu}\right)$, dimensionless

s molecular speed ratio $\left(\frac{U}{v_m}\right)$, dimensionless

T free-stream static temperature, °F absolute

T_c temperature of the cylinder, °F absolute

T_e equilibrium temperature, °F absolute

U stream mass velocity, feet per second

v_a acoustic speed $(\sqrt{\gamma gRT})$, feet per second

v_m most probable molecular speed $(\sqrt{2gRT})$, feet per second

$\bar{v}$ mean molecular speed $\left(\sqrt{\frac{8gRT}{\pi}}\right)$, feet per second

Z_1 dimensionless function of s defined by

$$Z_1=\pi I_0\left(\frac{s^2}{2}\right)\exp\left(-\frac{s^2}{2}\right)$$

Z_2 dimensionless function of s defined by

$$Z_2=\pi s^2\left[I_0\left(\frac{s^2}{2}\right)+I_1\left(\frac{s^2}{2}\right)\right]\exp\left(-\frac{s^2}{2}\right)$$

α accommodation coefficient, dimensionless

γ ratio of specific heats, dimensionless

κ thermal conductivity, foot-pounds per second, square foot, °F per foot

μ viscosity, pound-seconds per square foot

ν kinematic viscosity $\left(\frac{\mu}{\rho}\right)$, square feet per second

ρ gas density, slugs per cubic foot

SUBSCRIPT

10 refers to the fact that the viscosity and thermal conductivity were evaluated at stagnation temperature while the density was evaluated at free-stream conditions

ANALYSIS

SOME GENERAL RELATIONS BETWEEN VARIABLES

Before proceeding with the analysis, it is desirable to set down a few relations which are used throughout. The Knudsen number, $K=l/d$, can be related to the Mach and Reynolds numbers as follows:

$$\frac{M}{Re}=\frac{\frac{U}{v_a}}{\frac{Ud\rho}{\mu}} \tag{1}$$

From reference 14, page 147, the viscosity of a rarefied gas composed of hard elastic spheres and having a Maxwellian velocity distribution can be expressed in terms of the density, mean molecular velocity, and mean-free molecular path, $\mu=0.499\rho\bar{v}l$. Thus, very closely,

$$\frac{M}{Re}=\sqrt{\frac{2}{\pi\gamma}}K \tag{2}$$

The molecular speed ratio s, which is a primary variable in the analysis of free-molecule flows, is defined as $s=U/v_m$. Since $v_m=\sqrt{2gRT}$ and $v_a=\sqrt{\gamma gRT}$, we have a relation between s and M

$$s=\sqrt{\frac{\gamma}{2}}M \tag{3}$$

HEAT TRANSFER FROM CYLINDERS IN FREE-MOLECULE FLOW

Heat transfer from a circular cylinder oriented transversely to a gas stream has been treated, for the case of free-molecule flow, in reference 8. It is useful, however, to examine the final equations derived therein with a view to putting them in such form as will allow plotting of the experimental data on a basis comparable with continuum data.

The equation for heat transfer from a cylinder to a diatomic gas stream is shown in reference 8 to be (neglecting radiation terms)

$$\frac{T_c}{T}\,g(s)-f(s)-\frac{2\pi^{3/2}}{p v_m \alpha}\,Q=0 \tag{4}$$

One can define a heat-transfer coefficient per unit area as

$$h=\frac{Q}{T_c-T_e} \tag{5}$$

where T_e is the equilibrium temperature assumed by the cylinder in the absence of heat transfer. The quantity T_e can be obtained from equation (4) by setting the term Q equal to zero in which case T_c equals T_e. Thus,

$$T_e=T\,\frac{f(s)}{g(s)} \tag{6}$$

Then, substitution of equations (4) and (6) into equation (5) yields

$$h=\frac{p v_m \alpha g(s)}{2\pi^{3/2}T} \tag{7}$$

If use is made of the relation $p/T=g\rho R$, equation (7) can be rewritten as

$$Nu=\frac{g\alpha R}{2\pi^{3/2}c_p}\,RePr\,\frac{g(s)}{s} \tag{8}$$

Substituting numerical values for the constants, for the case of nitrogen gas, we have,

$$Nu=0.0264\alpha RePr\,\frac{g(s)}{s} \tag{9}$$

The term $g(s)/s$ is nearly constant for values of s greater than 2 and approaches a value of $6\sqrt{\pi}$ asymptotically. The limiting values are

$$\left[\frac{g(s)}{s}\right]_{s\to 0}=\frac{3\pi}{s}$$

$$\left[\frac{g(s)}{s}\right]_{s\to\infty}=6\sqrt{\pi}$$

Then for values of $s>2$ we have, very nearly,

$$Nu=0.283\alpha RePr \tag{10}$$

For gases, the Prandtl number, Pr, is nearly constant over a wide temperature range and, for diatomic gases, has a

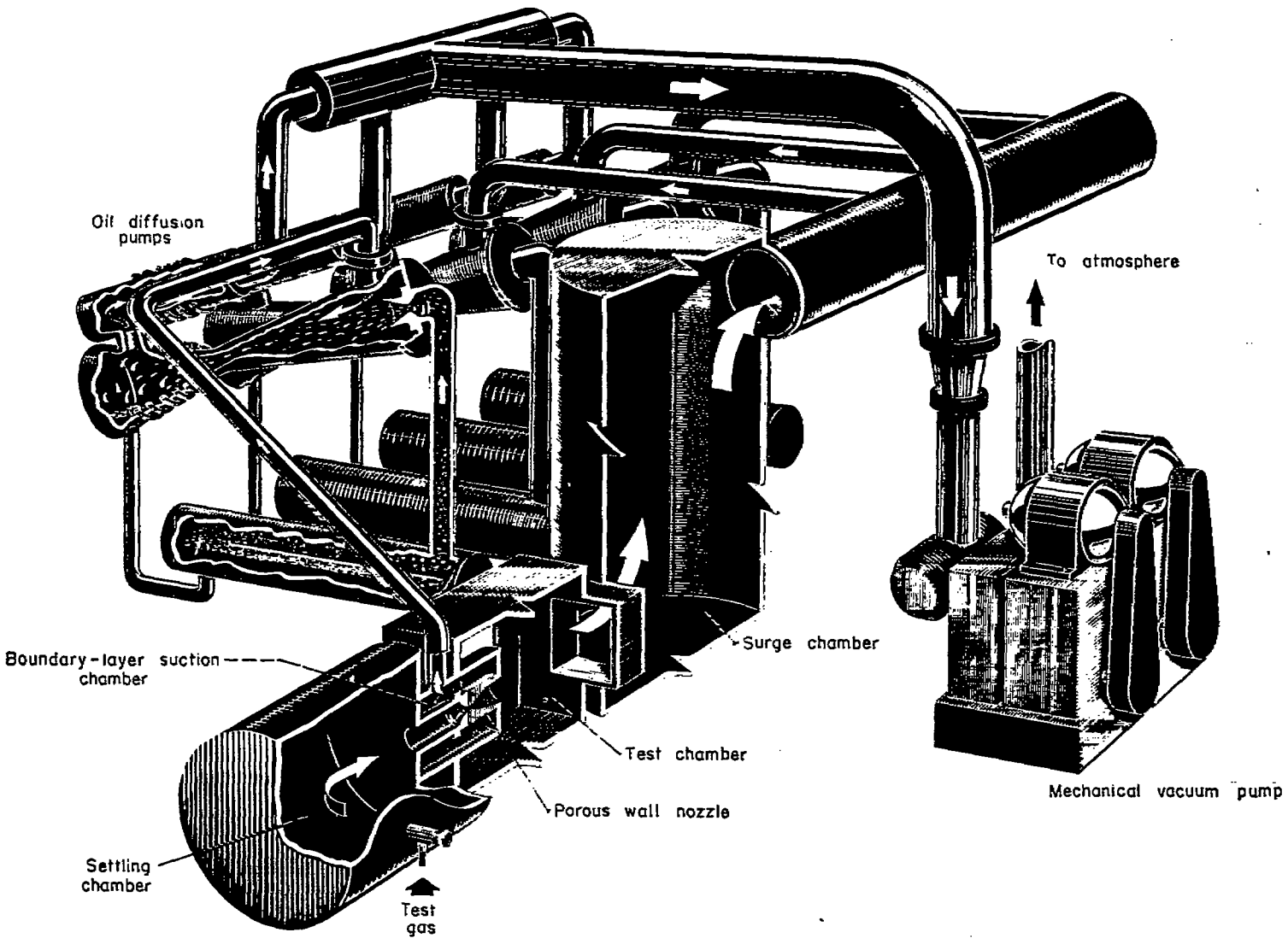

FIGURE 1.—Ames low-density wind tunnel.

value of about 0.72 at 0° F. Substitution of this value for Pr into equation (10) yields the final equation for heat transfer from a transverse cylinder in a high-speed ($s>2$) free-molecule flow field

$$Nu=0.204\alpha Re \tag{11}$$

DESCRIPTION OF EQUIPMENT AND EXPERIMENTAL TECHNIQUE

THE WIND TUNNEL

The Ames Laboratory low-density wind tunnel, in which the present tests were conducted, is an open-jet, nonreturn-type tunnel and is described in detail in reference 8. A sketch of the major components of the wind tunnel is shown in figure 1.

The nozzles used in the present test, however, differed from those described in reference 8 and for that reason will be described in detail here. The nozzles used were axially symmetric, 1½ inches in exit diameter, and had porous walls to allow part of the boundary layer to be removed by suction. The nozzle contours were determined by calculating the shape of the inner core (assumed inviscid) by the method of characteristics, as outlined in reference 15, and applying a boundary-layer correction to the contour. The boundary-layer correction was calculated using the von Kármán momentum-integral theory given by Schaaf in reference 16. The correction actually applied to the nozzle contours corresponded to that calculated for the highest pressure level used.

The nozzles were constructed by stacking 2-inch-diameter, thin metal shims to the desired length. The stack of shims was held together by four through-bolts and was machined to the calculated internal contour. The nozzle walls were made porous by discarding every other solid shim and replacing it with small spacers around each of the four through-bolts. The shim thickness was varied along the length of the nozzle in order to obtain a reasonably uniform suction velocity normal to the wall. The nozzle boundary-layer removal was accomplished by connecting a chamber around the nozzle to one of the main vacuum pumps. The porous nozzle is shown diagrammatically in figure 2.

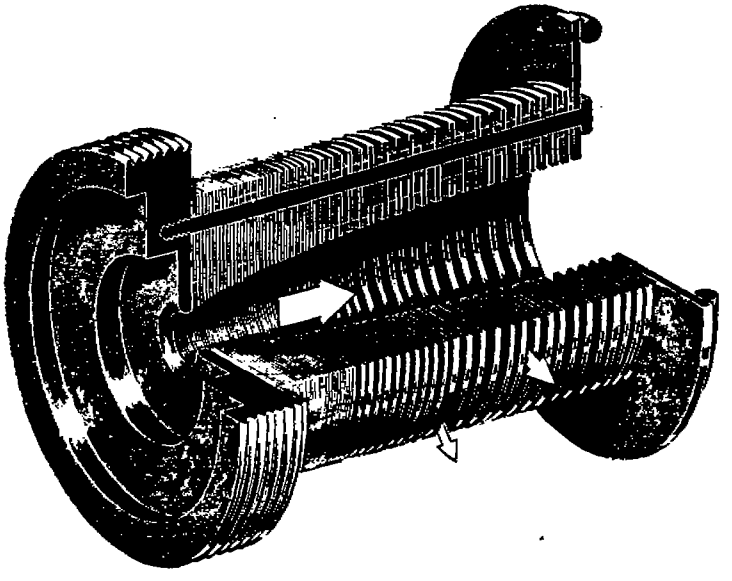

FIGURE 2.—Cutaway view of porous nozzle.

The use of boundary-layer removal resulted in a nozzle which produced an essentially constant Mach number over the center third of its diameter in contrast with the solid nozzles described in reference 8 which produced essentially a parabolic Mach number distribution. Also the use of boundary-layer removal permitted the pressure level of the wind tunnel to be changed by a factor of 2½, while the Mach number varied only by about ±2 percent. A typical Mach number distribution obtained with and without boundary-layer suction is shown in figure 3.

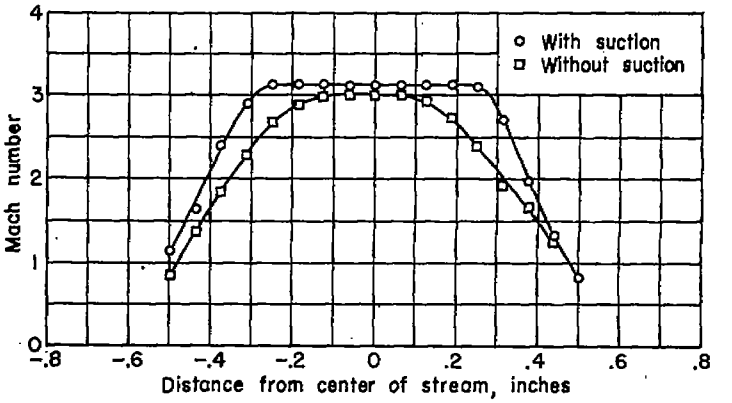

FIGURE 3.—Variation of Mach number with distance from center of stream with and without boundary-layer suction. Stream static pressure 115 microns of mercury absolute.

The three nozzles used in the tests produced Mach numbers of 2.00±1½ percent, 2.50±2 percent, and 3.15±2 percent over a range of pressure levels from 80 to 200 microns of mercury absolute in the center half-inch of the jet.

MODELS TESTED

The models tested were right circular cylinders held normal to the air stream by copper rods fastened to the ends of the cylinders. Six models were used in the tests; their diameters, test lengths, and types of construction are given in the following table:

Model No.	Material	Diameter (in.)	Test length (in.)	Remarks
1	Pt-Ni alloy	0.0010	0.434	Solid.
2	Pt	.0050	.480	Solid.
3	Fe—Constantan	.030	.50	Butt-welded thermocouple.
4	Pt film on Pyrex glass	.080	.530	Solid.
5	Ni	.051	.380	Ni wire wound on ceramic tube.
6	Ni	.126	.368	

Models 1 through 4 had guard heaters wound on the copper support rods to allow the temperature of the ends of the models to be adjusted in order to prevent end losses. Thermocouples were soldered to each end support in order that the model end temperature could be measured. Figure 4 shows the arrangement of the model and its supports in the stream. Models 5 and 6 were constructed by wrapping 0.003-inch-diameter insulated nickel wire on a ceramic tube. Voltage leads were soldered to each end of the test length and brought out through the ceramic tube to the ends of the model. The model was then dipped in a thin solution of enamel to obtain a smooth surface. These models were made long enough to completely span the nozzle.

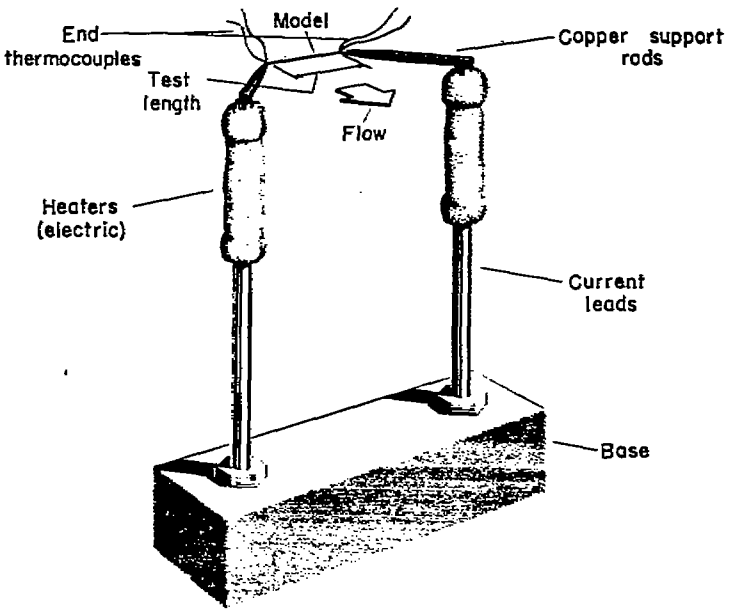

FIGURE 4.—Diagrammatic sketch of model and supports.

Model 3 was a butt-welded iron-constantan thermocouple with the junction located in the center of the test length.

Model 4 was constructed by coating a Pyrex glass rod with a very thin layer of platinum. The model was mounted as shown in figure 4 by soldering the copper rods directly to the platinum coating.

The temperature of all the models, except number 3, was determined from their resistance which was measured by comparing the voltage drop across the model to the voltage drop across a standard resistor connected in series with the model. These voltages were measured with a direct-current potentiometer and galvanometer having a least count of 1 microvolt. The temperature-resistance characteristics of each model were determined by calibrating the model in a constant temperature bath over the range of temperatures encountered in the tests. The temperature of model 3 was determined by measuring, with a potentiometer, the thermocouple voltage generated at the junction.

TEST PROCEDURE

An impact-pressure tube, a static-pressure tube, and the test model were mounted on a common support which could be moved through the test area of the jet. The wind tunnel was then started and the impact and static pressures were measured over the test area of the nozzle. The static-pressure tube has been described in reference 8 and the impact-pressure tube was identical with the 0.150-inch-diameter impact-pressure tube described in reference 17. Pressure-measuring techniques are also described in reference 8. The impact-pressure corrections due to viscous effects, given in reference 17, were used in order to calculate the stream Mach number.

After the stream conditions had been determined, the test model was lowered into the stream and the equilibrium temperatures of the model test length and ends were measured. In the case of models 1 and 2, the guard heaters were used to raise the model end temperatures until they were equal to the indicated test-length temperature. Heat was not supplied to the ends of the other models for the measurement of equilibrium temperature as, for the most part, the equilibrium temperatures were, on the average, 10° F below the stagnation temperature of the stream.

After the equilibrium temperature of the model was measured, the model was heated by passing a direct current from a battery through the model. For models 1, 2, and 4, the end temperatures were adjusted until there was no temperature difference between the ends and the model test length. When this point was reached, the voltage across the test length of the model and across the standard resistor in series with the model was read on the potentiometer. The heat supplied to the model was then the product of the voltage drop across the test length of the model and the current through it.

Model 3, the butt-welded thermocouple, was not used in the heat-transfer tests.

Independent control of the end temperatures was not possible with models 5 and 6; however, these models were constructed in such a manner that the resistance to heat flow along the models was large and the test length was confined to the center ⅜ inch of the models, thus minimizing the effect of end losses.

The radiation heat loss from the models was determined by measuring the heat loss over a range of model temperatures, with no flow passing through the tunnel, as the test-chamber pressure was decreased toward zero. As it was not possible to obtain a test-chamber pressure below 1 micron of mercury absolute, the actual radiation heat loss was obtained by extrapolating the measured heat loss to zero pressure. Models 1 and 6 were later placed in a chamber in which the pressure could be maintained at 0.1 micron of mercury absolute and the results checked the extrapolated data.

The resistance of the models at room temperature was checked from day to day and, if a resistance changed enough so that the temperature of the model was in doubt by more than 2° F, the model was either recalibrated or replaced.

The tests were conducted at three nominal Mach numbers, 2.0, 2.5, and 3.15, and over a range of pressures from 80 to 200 microns of mercury absolute.

The test gas used was commercially pure dry nitrogen.

A summary of the test data is shown in table I.

RESULTS AND DISCUSSION

TEMPERATURE RECOVERY FOR AN INSULATED BODY

The usual starting point for a set of heat-transfer experiments at high airspeeds is the determination of the equilibrium temperature of the body; that is, the temperature assumed by the body in the absence of heat transfer. In the case of a flat plate in continuum flow, several analyses are available for each of the two cases of laminar and turbulent boundary layers. In these analyses, the equilibrium temperature is expressed in terms of "recovery factor," r, which can be implictly defined as

$$T_e = T\left(1+\frac{\gamma-1}{2}rM^2\right)$$

A summary of the available experimental and theoretical results is given in reference 18. In brief, the theoretical results indicate the recovery factor for laminar boundary

TABLE I.—TEST DATA

Model No.	Mach No.	Static pressure (lb/sq ft)	Stagnation temperature (°F)	T_s (°F)	T_e (°F)	$\Delta T = T_s - T_e$ (°F)	Net heat transfer from model (watts × 10^{-3})
1	1.96	0.280	69.0	152.5	303	150.5	3.03
	2.01	.529	71.0		313	[a] 160.5	5.95
	1.97	.377	68.5		308	[a] 161.8	4.32
	1.95	.331	68.7	148.5			
	1.99	.415	71.3	148.0			
	2.46	.378	71.6		300	[a] 146.5	4.83
	2.46	.378	71.6		400	[a] 246.5	8.10
	2.48	.422	71.3		301.5	[a] 149.4	5.63
	2.48	.422	71.3		401.5	[a] 249.4	9.80
	2.49	.468	68.7		300	[a] 153.3	6.20
	2.49	.468	68.7		403	[a] 256.3	10.65
	2.58	.503	71.0		301.5	[a] 152.4	6.73
	2.58	.503	71.0		400	[a] 250.9	11.20
	2.43	.341	72.3		302	[a] 146.8	5.17
	2.43	.341	72.3		404	[a] 248.8	8.56
	2.50	.338	67.5		302	[a] 152.3	4.88
	2.50	.338	68.7		404	[a] 252.9	8.00
	2.52	.457	66.7		300	[a] 155.5	6.40
	2.52	.457	66.7		398	[a] 253.5	10.47
	2.47	.376	65.0	146.5			
	2.59	.493	68.7	144.0			
	2.44	.304	66.4	153.0			
	2.55	.437	70.3	148.5			
	[b] 2.25	.180	72.0	173.5	301.5	128	1.88
	[b] 2.44	.224	65.0	160.5	300	139.5	2.49
2	2.47	.343	70.3		301.6	[a] 168	17.0
	2.60	.503	67.5		305	[a] 191.1	27.1
	2.56	.492	71.5		302.5	[a] 177.5	21.8
	2.47	.355	74.0	132.7			
	2.39	.304	68.9	136.7			
	2.49	.388	69.4	129.0			
	2.57	.458	69.7	116.0			
	3.22	.275	73.5	128.0	302.8	174.8	19.9
	3.18	.315	66.7	120.3	306.5	186.2	24.0
2	3.19	0.330	63.0	100.5	310.3	209.8	25.9
	3.15	.437	67.7	101.3	308.0	206.7	32.7
	3.12	.547	68.5	96.0	307.5	211.5	41.0
	3.17	.378	64.3	105.0			
3	3.11	.274	70.4	60.6			
	3.15	.395	67.4	56.5			
	3.04	.503	68.2	57.8			
	3.17	.546	68.5	57.6			
	2.46	.399	68.5	59.2			
	2.62	.411	70.5	60.7			
	2.40	.250	68.0	60.4			
	2.59	.517	68.5	57.3			
4	1.95	.346	68.5	66.0	232	166	106.5
	1.98	.418	66.0	66.0	223.5	157.5	126.8
	2.11	.564	65.7	65.7	203.5	137.8	132.3
5	1.98	.350	69.0	71.5	200	128.5	45.3
	2.01	.504	71.0	65.5	200.3	134.8	65.2
	2.06	.239	70.3	79.3	197.2	117.9	31.8
6	2.01	.324	66.5	64.1	198.4	134.3	85.5
	2.01	.267	68.2	68.1	205.4	137.3	76.3
	2.04	.449	65.0	53.4	176.9	118.5	97.8
	2.04	.285	68.7	69.1	186.1	117.0	67.0
	2.05	.507	64.3	57.2	193.6	136.4	123.3
	3.18	.296	67.0	52.0	197.0	138.0	123.7
	3.36	.332	65.0	53.1	184.5	131.4	146.5
	[b] 2.80	.342	70.0	56.4	178.0	111.6	130.7
	[b] 2.65	.272	73.0	57.5	181.7	124.2	108.2
	[b] 2.49	.217	74.0	62.0	176.0	114.0	80.7
	[b] 2.51	.139	68.5	58.0	174.5	116.5	64.9
	[b] 2.39	.087	72.0	71.0	179	108.0	39.6
	[b] 2.53	.208	72.4	59.7	175	115.3	84.0

[a] T_e obtained from figure 5.
[b] Data taken in University of California tunnel.

layers to be independent of both Mach and Reynolds numbers and to have a value of $Pr^{1/2}$. All the turbulent-boundary-layer analyses assumed incompressible flow, hence Mach number effects do not appear. The analyses, in general, indicate that the recovery factor for turbulent boundary layers on a flat plate has a value close to $Pr^{1/3}$ with some analyses showing a minor dependence of recovery factor on the Reynolds number.

For the case of a cylinder with axis normal to the stream, little theory exists and recourse to experiment is required. Several experiments have contributed information concerning the equilibrium temperature of transverse cylinders in high-speed air streams, notably those described in references 1, 19, and 20. There is considerable disagreement among the data cited and apparently a definitive experiment with a systematic variation of Reynolds and Mach numbers has yet to be made.

The equilibrium temperature for the case of cylinders in free-molecule flow has been determined both theoretically and experimentally in reference 8. Good agreement was obtained between the experimental results and the somewhat surprising theoretical prediction that the cylinder equilibrium temperature would exceed the total or stagnation temperature of the gas stream. This phenomenon, of course, is in direct contrast to the corresponding phenomenon which occurs under continuum-flow conditions where an insulated body can have, at most, a temperature equal to the stream total temperature and normally does not even attain this temperature due to outward heat flow in the boundary layer. The anomaly can be explained, however, by a consideration, in the case of free-molecule flow, of the magnitudes of the incident and re-emitted total velocity resulting from combination of the stream mass velocity and the random thermal velocities. When the total velocity term is squared there results a term, which is twice the scalar product of the vector mass velocity and the vector thermal velocity. This scalar product term effectively increases the apparent internal energy of the gas from the continuum value of $3/2\ kT$ per molecule to a value varying from $2\ kT$ to $5/2\ kT$ depending upon the speed and orientation of the body. The apparent internal energy becomes $5/2\ kT$ for high speeds and body angles of attack greater than zero. This is just equal to the internal plus potential energy per molecule of a cube of continuum gas. Therefore, the energy incident on the body in free-molecule flow becomes equal to that of a continuum for large values of the molecular speed ratio for surfaces inclined at angles of attack greater than zero. The molecular energy which is re-emitted from the surface is assumed to be equal to the energy of a stream issuing effusively from a Maxwellian gas, in equilibrium at some yet unspecified temperature, into a perfect vacuum. For the case of an insulated body, the temperature of this gas is that of the body. The energy of the re-emitted stream calculated in this manner is equal to $2\ kT_e$ per molecule. The corresponding energy for a continuum gas at the same temperature is $5/2\ kT_e$ per molecule if both thermal and potential energies are considered. For a given re-emitted stream temperature, a smaller amount of energy per molecule is transported from a body for the case of free-molecule flow than is transported in the case of continuum flow. It is clear that, if the same total amount of energy, namely the incident energy, is to be removed in each case, the effusive stream temperature and, hence, the body temperature for an insulated body must be higher for free-molecule flow than for continuum flow.

The equilibrium temperature for a cylinder in a free-molecule flow field has been shown (equation (6)) to be a

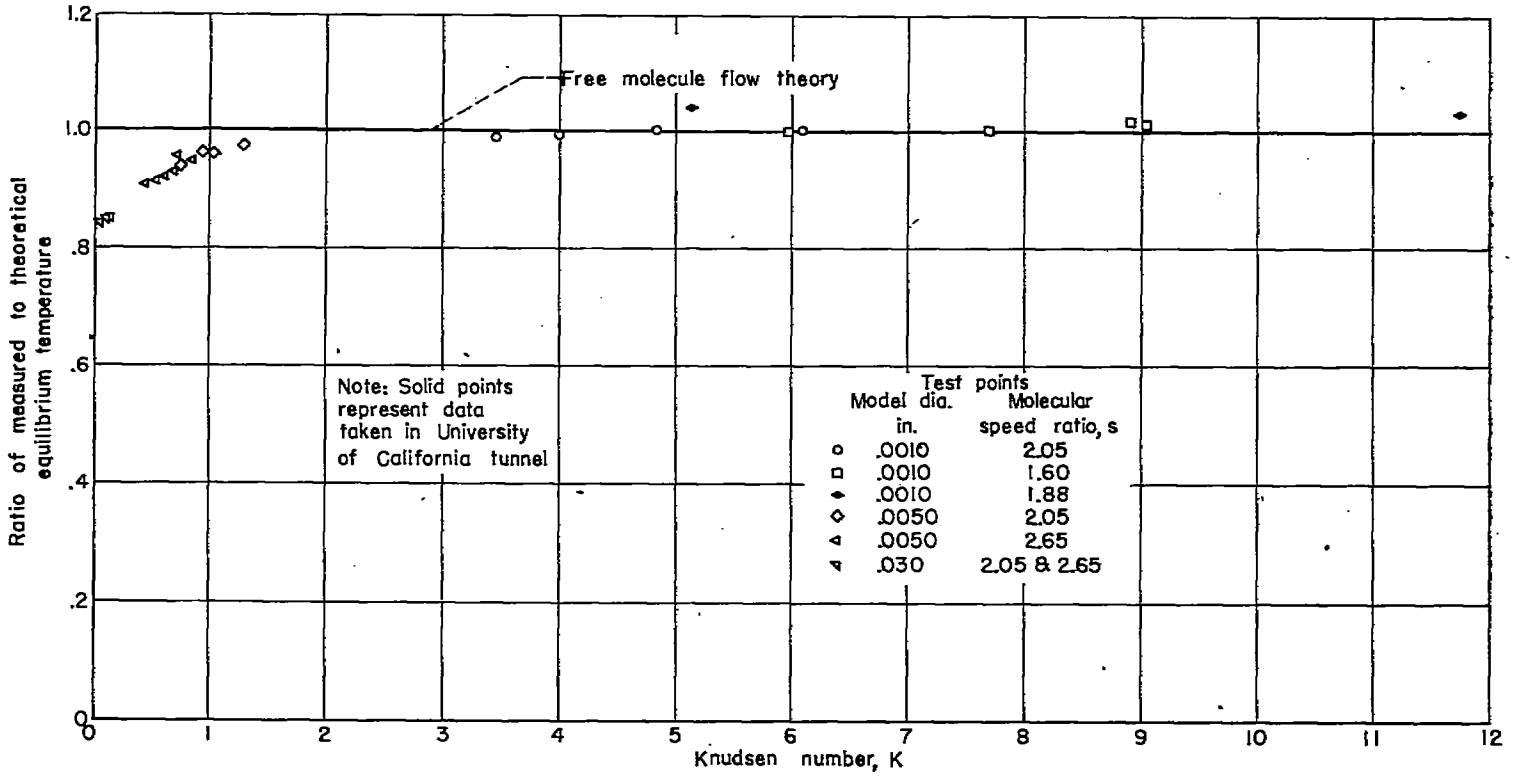

FIGURE 5.—Variation of the ratio of measured to theoretical equilibrium temperature with free-stream Knudsen number for transverse cylinders.

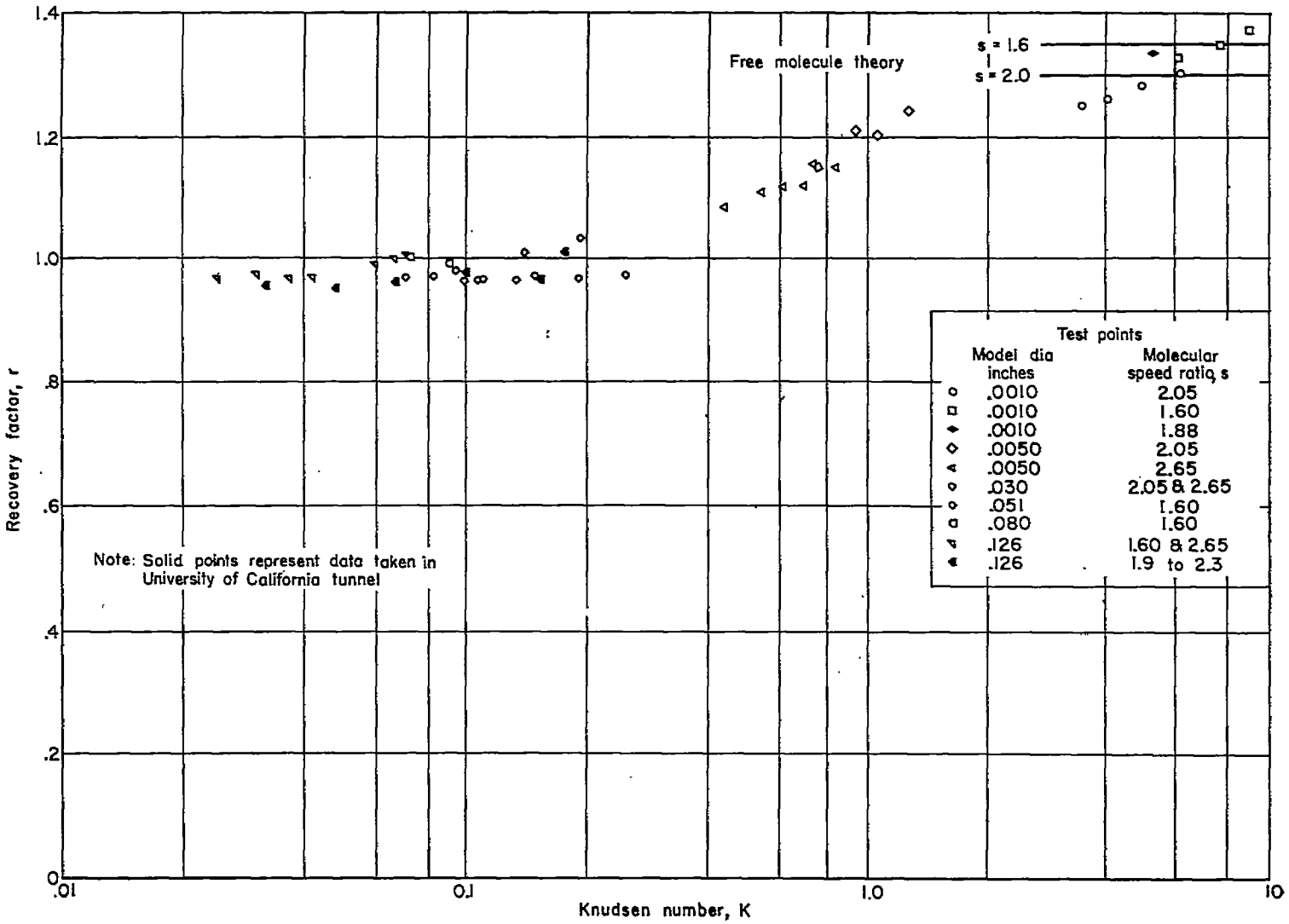

FIGURE 6.—Variation of recovery factor with Knudsen number.

function only of the molecular speed ratio, s, or the Mach number, M. (See equation (3).)

Because of the different parameters upon which the recovery factor or equilibrium temperature depends in the several regimes, it is difficult to plot all the equilibrium-temperature or recovery-factor data on a single graph. However, for the case of free-molecule flow, the theory predicts that the equilibrium-temperature ratio is a function of the molecular-speed ratio only. Hence, if we should plot the ratio of the measured equilibrium-temperature ratio T_e/T to the theoretical equilibrium-temperature ratio $f(s)/g(s)$ as a function of Knudsen number, the deviation of the ratio from a value of unity should define the lower limit of free-molecule flow in terms of the Knudsen number. These data are shown in figure 5 and indicate that the Knudsen number must have a value of approximately 2 in order that fully developed free-molecule flow exist for a transverse cylinder.

The recovery-factor data are shown in figure 6, plotted as a function of Knudsen number. It can be seen from this figure that the data, in the range of Knudsen numbers from 0.02 to 2.0, are correlated by Knudsen number alone with no systematic Mach number effects shown. It is further evident that, for values of Knudsen number greater than 0.2, the recovery factor exceeds a value of unity, presumably due to the development of free-molecule-flow effects. Also, it can be seen that for values of Knudsen number less than 0.2, the recovery factor has a constant value indicating an independence from Reynolds number effects. (See equation (2).)

HEAT-TRANSFER-TEST RESULTS

The presentation of heat-transfer data for these tests is, as with the recovery-factor data, beset with difficulty due to lack of a common correlating parameter. The results of the heat-transfer tests are shown in one form in figure 7 in which Nu_{10} is plotted as a function of Re_{10}. The subscript 10 refers to the fact that the viscosity and thermal conductivity were evaluated at tunnel stagnation temperature, while the density was evaluated at free-stream conditions. The use of Nu_{10} and Re_{10} was suggested by Kovásznay and Törmarck, who found that this particular choice of conditions for evaluation of the gas properties eliminated the need for including the Mach number as an additional variable. The data of Kovásznay and Törmarck (reference 1) are shown as a dotted line which was computed from the expression

$$Nu_{10}=0.580\ Re_{10}^{1/2}-0.795$$

which is an empirical equation resulting in the best fit of their data. All the heat-transfer data obtained during the present tests are correlated by the broken line with an average deviation of ±6 percent. This line was faired through the data by the method of least squares and may be represented by the relation

$$Nu_{10}=0.132\ Re_{10}^{0.73} \tag{12}$$

The solid line represents equation (11) of this paper with the accommodation coefficient α having the value of 0.9. This

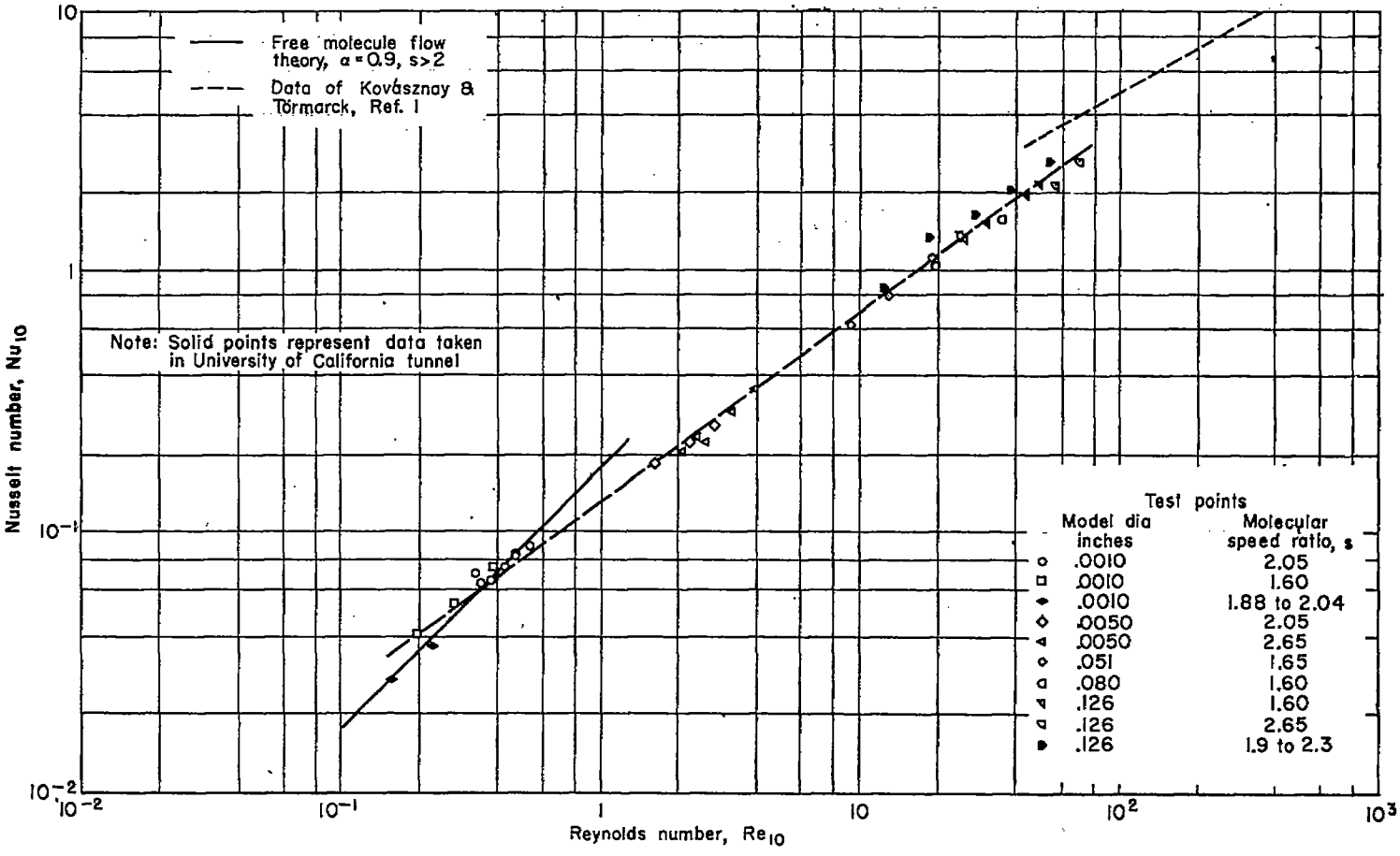

FIGURE 7.—Variation of Nu_{10} with Re_{10} for transverse cylinders in a high-speed stream of rarefied gas

value of α was chosen to give the best fit of the data obtained in the free-molecule range of Knudsen numbers.

At the other extreme range of Reynolds numbers, however, it is seen that the data obtained in the Ames Laboratory low-density wind tunnel indicate Nusselt numbers substantially below those measured by Kovásznay and Törmarck. When these data were obtained, it was suspected that the discrepancy was due to blockage effects since the model (¼-inch diameter) was large compared to the diameter (½ inch) of that portion of the stream suitable for testing. Consequently, some of the tests were repeated using the University of California low-density wind tunnel (see reference 21 for description) which has a considerably larger (approximately 3-inch diameter) testing region. The higher Reynolds number data obtained in the University of California tunnel again indicated Nusselt numbers below those obtained by Kovásznay and Törmarck although higher than those obtained in the Ames tunnel. The fact that the present low-density data were obtained in two different wind tunnels and (in the case of the Ames test) with three different models, while the data of Kovásznay and Törmarck are corroborated by the data of Lowell (reference 20), indicates that the difference in Nusselt numbers is real and is not due to experimental error.[2]

The discrepancy may be due to one or a combination of several effects. First, there is the probability that a difference in tunnel turbulence level existed between the tests of Kovásznay and Törmarck and Lowell, which were conducted at relatively high pressures, and the present tests which were conducted at extremely low pressures. It appears likely that the turbulence level in a low-density nozzle would be low due to the large viscous effects present.[3]

It is also probable that a correction for the effect of viscosity should be applied to the readings of the static pressure tube, as was done in the case of the impact pressure tube readings. The value of this correction (which would affect the calculated Mach and Reynolds numbers) is unknown at present.

It is apparent that additional tests are required to resolve the discrepancy.

CONCLUSIONS

The following conclusions can be drawn from the data for transverse cylinders presented in this paper:

1. Fully developed free-molecule flow occurs for Knudsen numbers of approximately 2 and higher.
2. For Knudsen numbers greater than 0.2, the temperature-recovery factor exceeds unity even though free-molecule flow is not fully developed.
3. For the case of high-speed flow of a rarefied gas about cylinders, the temperature-recovery factor is primarily dependent upon Knudsen number.
4. Over the range of conditions covered in the present tests, the Nusselt number is a function only of the Reynolds number if the viscosity and thermal conductivity are based on stagnation temperature and the density based on free-stream conditions.
5. In free-molecule flow, the heat-transfer data are well correlated by the theory with the accommodation coefficient equal to 0.9.

[2] It can be observed that the heat-transfer data obtained in the University of California tunnel with the 0.001-inch-diameter model are in good agreement with the data obtained in the Ames tunnel; however, it should be pointed out that a shift in the temperature calibration of this model resulted in an uncertainty of the order of ±10 percent in the data obtained in the University of California tunnel.

[3] In passing, it is noted that McAdams (reference 22) reported large changes in heat-transfer rates from cylinders due to variation of the turbulence level of the air stream although insufficient details of the original experimental work were given to enable any conclusions to be drawn that would be pertinent to the present discussion.

Ames Aeronautical Laboratory
National Advisory Committee for Aeronautics
Moffett Field, Calif., *May 14, 1951.*

REFERENCES

1. Kovásznay, Leslie S. G., and Törmarck, Sven I. A.: Heat Loss of Hot Wires in Supersonic Flow. Johns Hopkins Univ., Dept. of Aero., Bumblebee Rept. No. 127, Apr. 1950.
2. Whipple, Fred L.: Meteors and the Earth's Upper Atmosphere. Review of Modern Physics, vol. 15, no. 4, Oct. 1943, pp. 246–264.
3. Epstein, Paul S.: On the Resistance Experienced by Spheres in Their Motion Through Gases. Physical Review, vol. 23, no. 6, June 1924, pp. 710–733.
4. Tsien, Hsue-Shen: Superaerodynamics, Mechanics of Rarefied Gases. Jour. Aero. Sci., vol. 13, no. 12, Dec. 1946, pp. 653–664.
5. Stalder, Jackson R., and Jukoff, David: Heat Transfer to Bodies Traveling at High Speed in the Upper Atmosphere. NACA Rep. 944, 1949. (Formerly NACA TN 1682.)
6. Heineman, M.: Theory of Drag in Highly Rarefied Gases. Communications on Pure and Applied Mathematics, vol. 1, no. 3, Sept. 1948, pp. 259–273.
7. Ashley, Holt: Applications of the Theory of Free Molecule Flow to Aeronautics. Jour. Aero. Sci., vol. 16, no. 2, Feb. 1949, pp. 95–104.
8. Stalder, Jackson R., Goodwin, Glen, and Creager, Marcus O.: A Comparison of Theory and Experiment for High-Speed Free-Molecule Flow. NACA Rep. 1032, 1951. (Formerly NACA TN 2244.)
9. Chapman, Sydney, and Cowling, T. G.: The Mathematical Theory of Non-Uniform Gases. Cambridge University Press, London, England, 1939.
10. Schamberg, Richard: The Fundamental Differential Equations and the Boundary Conditions for High Speed Slip-Flow, and Their Application to Several Specific Problems. GALCIT, 1947.
11. Grad, Harold: On the Kinetic Theory of Rarefied Gases. Communications on Pure and Applied Mathematics, vol. 2, no. 4, Dec. 1949, pp. 331–407.
12. Uhlenbeck, G. E.: Transport Phenomena in Dilute Gases. U. S. Naval Ord. Lab., Rep. No. NOLR 1134, Symposium on Aerothermodynamics. July 1, 1950, pp. 51–56.
13. Kane, E. D.: Drag Forces on Spheres in Low Density Supersonic Gas Flow. Univ. of Calif., Dept. of Engineering Rep. No. HE-150-65, Feb. 15, 1950.
14. Kennard, Earle H.: Kinetic Theory of Gases, With an Introduction to Statistical Mechanics. McGraw-Hill Book Co., Inc., New York, N. Y., 1938.
15. Cronvich, Lester L.: A Numerical-Graphical Method of Characteristics for Axially Symmetric Isentropic Flow Problems. Jour. Aero. Sci., vol. 15, no. 3, Mar. 1948, pp. 155–162.
16. Schaaf, S. A.: An Axially Symmetric Nozzle with Boundary Layer Correction. Univ. of Calif., Dept. of Engineering Rep. No. HE-150-58, June 15, 1949.
17. Kane, E. D., and Maslach, G. J.: Impact-Pressure Interpretation in a Rarefied Gas at Supersonic Speeds. NACA TN 2210, 1950.
18. Stalder, Jackson R., Rubesin, Morris W., and Tendeland, Thorval: A Determination of the Laminar-, Transitional-, and Turbulent-Boundary-Layer Temperature-Recovery Factors on a Flat Plate in Supersonic Flow. NACA TN 2077, 1950.

19. Johnson, H. A., and Rubesin, M. W.: Aerodynamic Heating and Convective Heat Transfer—Summary of Literature Survey. Trans. A. S. M. E., vol. 71, no. 5, July 1949, pp. 447–456.
20. Lowell, Herman H.: Design and Applications of Hot-Wire Anemometers for Steady-State Measurements at Transonic and Supersonic Air Speeds. NACA TN 2117, 1950.
21. Schaaf, S. A., Horning, D. O., and Kane, E. D.: Design and Initial Operation of a Low-Density Supersonic Wind Tunnel. Heat Transfer and Fluid Mechanics Institute, 1949. (Papers presented at June 22–24, 1949 meeting.) Amer. Soc. of Mech. Engineers, pp. 223–242.
22. McAdams, William H.: Heat Transmission. McGraw-Hill Book Co., Inc., New York, N. Y., 2d ed., 1942, p. 223.