RESTRICTED

RM A52A14a

UNCLASSIFIED

MAR 14 1952

NACA RM A52A14a

RESEARCH MEMORANDUM

LOW-SPEED AERODYNAMIC CHARACTERISTICS OF A LARGE-SCALE 60° SWEPT-BACK WING WITH HIGH LIFT DEVICES

By Mark W. Kelly

Ames Aeronautical Laboratory
Moffett Field, Calif.

CLASSIFICATION CANCELLED

By J. W. Crowley Date 12-11-53
EO 10501

By J.H. 1-8-54 NACA
RF 1758

CLASSIFIED DOCUMENT

This material contains information affecting the National Defense of the United States within the meaning of the espionage laws, Title 18, U.S.C., Secs. 793 and 794, the transmission or revelation of which in any manner to unauthorized person is prohibited by law.

NATIONAL ADVISORY COMMITTEE FOR AERONAUTICS

WASHINGTON

March 3, 1952

UNCLASSIFIED

RESTRICTED

NACA LIBRARY
LANGLEY AERONAUTICAL LABORATORY
Langley Field, Va.

RESTRICTED UNCLASSIFIED

NATIONAL ADVISORY COMMITTEE FOR AERONAUTICS

RESEARCH MEMORANDUM

LOW-SPEED AERODYNAMIC CHARACTERISTICS OF A LARGE-SCALE 60° SWEPT-BACK WING WITH HIGH LIFT DEVICES

By Mark W. Kelly

SUMMARY

Large-scale tests have been made of a semispan model of a 60° swept-back wing-fuselage combination. The model was equipped with 25-percent-chord, 36-percent-span, double-slotted flaps; 25-percent-chord, 43-percent-span ailerons; and 17.5-percent-chord leading-edge slats having spans from 71 to 31 percent of the wing span. The wing had an aspect ratio of 3.5, taper ratio of 0.45, and NACA 64A010 airfoil sections normal to the wing 0.25-chord line. Additional tests were made with the double-slotted flap replaced by a split flap of identical chord and span. Most of the investigation was performed at a Reynolds number of 8.0×10^6. However, some force data are presented for a range of Reynolds numbers from 4.0×10^6 to 10.0×10^6.

Flow separation limited the linear range of the pitching moment of the base wing to a lift coefficient of about 0.35. The double-slotted flaps deflected 55° increased this value by 0.25, while the double-slotted flaps used in conjunction with approximately 71-percent-span leading-edge slats extended the linear range of the pitching moment to a lift coefficient of 0.88.

INTRODUCTION

The results of large-scale tests of a semispan model of a 45° swept-back wing equipped with double-slotted flaps were presented in reference 1. This report contains the results of a series of tests made of this model with the wing sweep increased to 60° to determine the effects of double-slotted flaps on the lift and static longitudinal stability. This wing was also equipped with leading-edge slats and ailerons. Data were

RESTRICTED UNCLASSIFIED

obtained for various combinations of these devices. In addition, tests were made with the double-slotted flaps replaced by a split flap of identical plan form. Pressure data were obtained to determine the effect of these devices on separation and aerodynamic loading. In order to make the data rapidly available they have been presented with a minimum of analysis.

NOTATION

b twice span of semispan model, feet

c local wing chord, feet

$\bar{c}$ mean aerodynamic chord of wing $\left(\frac{2}{S}\int_0^{b/2} c^2 dy\right)$, feet

C_L lift coefficient $\left(\frac{\text{twice semispan lift}}{qS}\right)$

C_D drag coefficient $\left(\frac{\text{twice semispan drag}}{qS}\right)$

C_m pitching-moment coefficient referred to $0.25\bar{c}$ $\left(\frac{\text{twice semispan pitching moment}}{qS\bar{c}}\right)$

C_l rolling-moment coefficient $\{[(\text{semispan rolling moment, aileron deflected}) - (\text{semispan rolling moment, no aileron deflection})]/qSb\}$

L lower surface of wing

p_l local static pressure, pounds per square foot

p free-stream static pressure, pounds per square foot

q free-stream dynamic pressure $\left(\frac{1}{2}\rho V^2\right)$, pounds per square foot

R Reynolds number $\left(\frac{\rho V\bar{c}}{\mu}\right)$

S twice wing area of semispan model, square feet

U upper surface of wing

V free-stream velocity, feet per second

y spanwise distance from plane of symmetry, feet

α angle of attack, degrees

δ_a aileron deflection (positive downward), degrees

ρ free-stream air density, slugs per cubic foot

μ absolute viscosity, pound-seconds per square foot

δ_f flap deflection (positive downward), degrees

MODEL AND APPARATUS

The geometric characteristics of the model are given in figure 1. The airfoil sections normal to a line through their 0.25-chord stations were NACA 64A010 profiles. The ordinates for this section are given in table I. The 0.25-chord line of the reference sections was swept back 60°. The wing had an aspect ratio of 3.5, a taper ratio of 0.45, and no twist or dihedral.

The fuselage had a fineness ratio of 5.5, and had a semicircular cross section.

The wing had a leading-edge slat which extended from 0.22 b/2 to 0.93 b/2 referred to the wing 0.25-chord line as shown in figure 1. The slat was divided into five spanwise segments each of which could be extended independently. The slat plan form is shown in figure 1 and the slat cross section in both the extended and retracted position is given in figure 2.

The model was tested with both a split flap and a double-slotted flap. Both flaps extended from 0.21 b/2 to 0.57 b/2 and had chords equal to 0.25 of the wing chord normal to the wing 0.25-chord line. The fore flap of the double-slotted flap had a chord equal to 0.075 of the wing chord normal to the wing 0.25-chord line. Details of the double-slotted flap are given in figure 3. The position of the fore flap was fixed when the flap was deflected, but the main flap could be rotated about the point indicated in figure 3 to give deflections from 45° to 60°. The ordinates of the main flap and fore flap are given in tables II and III.

The wing outboard of the 0.57 b/2 span station was equipped with an aileron having a chord equal to 0.25 of the wing chord normal to the wing 0.25-chord line. The gap between the aileron and wing was sealed with masking tape throughout the tests.

The wing was equipped with pressure orifices at 6 spanwise stations. For the outboard five of these stations the orifices were arranged along the wing chords normal to the 0.25-chord line. The station nearest to the wing root was skewed 15° from the free-stream direction. (This

section was originally along a streamwise chord on the 45° swept-back wing.) The spanwise positions of the intersections of the chords containing pressure orifices with the 0.25-chord line are given in figure 4. On station I all the orifices aft of $x/c = 0.60$ were underneath the fuselage fairing or inside the fuselage.

A photograph of the model installed in the 40- by 80-foot wind tunnel is given in figure 5. The model was supported on a turntable which was independent of the tunnel-floor structure, so that the aerodynamic forces and moments could be measured with the wind-tunnel six-component balance system. The tunnel floor was used as the reflection plane. The clearance between the fuselage and the floor was approximately 1/2 inch.

TESTS

Force and pressure data were obtained for the various model configurations through angles of attack from -8° to 27.4°. Maximum lift was not attained at $\alpha = 27.4°$; however, structural limitations of the model pitching mechanism prevented testing at higher angles of attack. The tests were made at Reynolds numbers from 4.0×10^6 to 10.0×10^6 based on free-stream velocity and the mean aerodynamic chord of the wing. The above range of Reynolds numbers correspond to a range of dynamic pressure from about 6 to 38 pounds per square foot.

The double-slotted flap was tested at deflections of 45°, 50°, 55°, and 60°. The split flap was tested at deflections of 30°, 45°, and 60°. Most of the aileron data were obtained with aileron deflections of ±10°. However, some tests were made with other aileron deflections up to the maximum obtainable (+35° and -25°). The outboard end of the leading-edge slat was at 93 percent of the semispan and the inboard end was varied from 22 to 62 percent of the semispan. The deflection of the slat is shown in figure 2.

CORRECTIONS

The angle of attack and drag coefficient were adjusted for the effects of the wind-tunnel walls by addition of the following corrections:

$$\Delta\alpha = 0.30\ C_L$$

$$\Delta C_D = 0.0052\ C_L^2$$

No corrections were applied to the rolling-moment or pitching-moment coefficients.

No attempt was made to adjust the data for the effects of the boundary layer on the tunnel floor or the gap between the fuselage and the tunnel floor. Measurements reported in reference 1 indicate that the boundary layer on the floor just ahead of the model is about 14 inches thick, while the boundary layer on the fuselage just ahead of the wing is about 1 inch thick.

RESULTS

The results of the force measurements are presented in figures 6 to to 20. An index to these curves is given in the following tables:

BASE WING (ALL DEVICES UNDEFLECTED)	
Figure No.	Parameters plotted
6	α, C_D, C_m vs C_L - for various R
7	C_l vs α - for various δ_a

WING WITH DOUBLE-SLOTTED FLAP	
Figure No.	Parameters plotted
8	α, C_D, C_m vs C_L - for various R
9	α, C_D, C_m vs C_L - for various δ_f
10	α, C_D, C_m vs C_L - for various δ_a

WING WITH LEADING-EDGE SLATS	
Figure No.	Parameters plotted
11	α, C_D, C_m vs C_L - with all slats extended, and for various R
12	α, C_D, C_m vs C_L - for various slat spans
13	C_l vs α - for various slat spans
14	C_l vs α - with all slats extended, for various δ_a

WING WITH LEADING-EDGE SLATS AND DOUBLE-SLOTTED FLAPS	
Figure No.	Parameters plotted
15	α, C_D, C_m vs C_L - with all slats extended, for various R
16	α, C_D, C_m vs C_L - for various slat spans
17	α, C_D, C_m vs C_L - with all slats extended, for various δ_a
18	C_l vs α - for various slat spans

WING WITH SPLIT FLAP WITH AND WITHOUT LEADING-EDGE SLATS	
Figure No.	Parameters plotted
19	α, C_D, C_m vs C_L - for various δ_f
20	α, C_D, C_m vs C_L - with all slats extended, various δ_f

The pressure data for the base wing, the wing with double-slotted flaps, the wing with leading-edge slats, and the wing with leading-edge slats and double-slotted flaps are given in coefficient form in tables IV to VII.

The longitudinal characteristics for various aileron deflections, given in figures 10 and 17, are those which would be obtained from a full-span wing if both ailerons were deflected equal amounts in the same direction to simulate flaps or elevators. The rolling-moment coefficients presented in figures 7, 13, 14, and 18 are approximately those which would be obtained from the full-span wing if one aileron were deflected while the other was held neutral.

SUMMARY OF RESULTS

The data given in figures 6 to 20 and tables IV to VII may be summarized as follows:

1. For Reynolds numbers from 6.0×10^6 to 10.0×10^6, there was no significant change in the aerodynamic characteristics of the model. However, at a Reynolds number of 4.0×10^6, the break in the pitching-moment curve occurred at lower lift coefficients than those attained at the higher Reynolds numbers. The remaining discussion pertains to the data obtained at a Reynolds number of 8.0×10^6 only.

2. Separation as indicated by the pressure data first occurred on the base wing near the leading edge of the outboard sections at a lift coefficient of approximately 0.35 ($\alpha = 8^\circ$). This produced a large increase in the rate of drag rise and a stable break in the pitching moment which, however, was followed by a large unstable break at a lift coefficient of about 0.50 ($\alpha = 11^\circ$).

3. The separation on the wing equipped with double-slotted flaps deflected 55° was delayed to a lift coefficient of about 0.60 ($\alpha = 6^\circ$). Separation occurred on the wing with split flaps deflected 60° at a lift coefficient of approximately 0.45 ($\alpha = 7^\circ$).

4. With the leading-edge slats extended the initial stable break in the pitching moment was eliminated. The lift coefficient at which

the final unstable break in the pitching-moment curve occurred increased with increasing slat span.

5. With all the leading-edge slats extended and the double-slotted flap deflected 55° the adverse effects of separation as indicated by the force data were delayed to a lift coefficient of approximately 0.88 ($\alpha = 12°$). However, the pressure data indicated that separation had occurred on the outboard portion of the slat at a lift coefficient of about 0.8.

6. In all the configurations tested the final large change in the pitching-moment curve was in an unstable direction. Also in each case the loss of nose pressures indicated that separation initially occurred near the wing leading edge and outboard of the mean aerodynamic chord.

7. An aileron deflection of 10° gave a rolling-moment coefficient of about 0.006 at 0° angle of attack. The effect on the rolling moment coefficient of extending the leading-edge slat was so small that no consistent trend could be measured.

Ames Aeronautical Laboratory
National Advisory Committee for Aeronautics,
Moffett Field, Calif.

REFERENCE

1. James, Harry A., and Dew, Joseph K.: Effects of Double-Slotted Flaps and Leading-Edge Modifications on the Low-Speed Characteristics of a Large-Scale 45° Swept-Back Wing With and Without Camber and Twist. NACA RM A51D18, 1951.

TABLE I.- COORDINATES OF THE NACA 64A010 AIRFOIL SECTION

[Stations and ordinates given in percent of airfoil chord]

Station	Ordinate
0	0
.5	.804
.75	.969
1.25	1.225
2.5	1.688
5.0	2.327
7.5	2.805
10.0	3.199
15.0	3.813
20.0	4.272
25.0	4.606
30.0	4.837
35.0	4.968
40.0	4.995
45.0	4.894
50.0	4.684
55.0	4.388
60.0	4.021
65.0	3.597
70.0	3.127
75.0	2.623
80.0	2.103
85.0	1.582
90.0	1.062
95.0	.541
100.0	.021
L.E. radius:	0.687
T.E. radius:	0.023

TABLE II.- ORDINATES FOR 0.25-CHORD FLAP

[Stations and ordinates are referred to the airfoil chord line and are given in percent airfoil chord]

Stations	Upper ordinate	Lower ordinate
75.000	-1.000	-1.00
75.150	-.371	-1.557
75.295	-.076	-1.712
75.587	.268	-1.956
75.882	.535	-2.095
76.177	.751	-2.179
76.765	1.057	-2.289
77.352	1.272	-2.320
77.942	1.414	-2.304
78.530	1.496	-2.260
79.705	1.594	-2.136
80.882	1.637	-2.003
82.060	1.648	-1.880
83.235	1.630	-1.762
84.410	1.583	-1.641
85.000	1.550	-1.582
86.250	1.453	-1.453
90.000	1.062	-1.062
95.000	.541	-.541
100.000	.021	-.021
L.E. radius:	0.95 (center on flap chord line)	
T.E. radius:	0.023	

TABLE III.- ORDINATES FOR 0.075-CHORD FORE FLAP

[Stations and ordinates are referred to the fore-flap chord line and are given in percent airfoil chord]

Station	Upper ordinate	Lower ordinate
0	0	0
.42	.95	-.93
.83	1.31	-1.14
1.25	1.52	-1.20
1.67	1.67	-1.11
2.08	1.72	-.85
2.92	1.74	-.36
3.75	1.64	-.02
4.58	1.43	.18
5.42	1.13	.27
6.25	.75	.25
7.08	.28	.11
7.50	0	0
L.E. radius: 1.20 (center on flap chord line)		

NACA

TABLE IV.- TABULATED PRESSURE COEFFICIENTS[1] FOR THE BASE WING.
$R = 8.0 \times 10^6$

$\alpha = 0.0$

Orifice Location Percent Chord		STATIONS I	A	B	C	D	E
0		0.18	0.13	0.22	0.21	0.24	0.22
0.25	U	.07	.01	.19	.15	.16	.13
	L	.06	.05	.05	---	.05	---
0.5	U	0	- .04	.07	.08	.08	.06
	L	0	- .13	- .03	- .07	- .02	0
1.0	U	- .03	---	- .01	.01	.02	- .01
	L	- .05	---	- .06	- .06	- .06	- .04
1.5	U	- .05	- .04	---	- .02	0	- .04
	L	---	- .10	- .07	- .06	- .05	---
2.5	U	- .06	- .06	---	- .04	- .04	- .06
	L	- .08	- .10	- .09	- .08	- .06	- .03
3.5	U	- .08	- .08	- .07	- .04	- .06	- .04
	L	- .06	---	- .09	- .08	- .06	---
5.0	U	- .08	- .06	- .07	- .05	- .06	- .06
	L	- .08	- .10	- .08	- .07	- .02	---
7.5	U	- .08	- .10	- .07	---	- .08	- .06
	L	- .12	- .08	---	- .06	- .06	- .07
10.0	U	- .08	- .11	- .07	- .06	- .07	- .08
	L	- .08	---	- .11	- .06	---	---
15.0	U	- .11	- .12	---	---	- .06	- .08
17.5	U	- .09	- .13	---	---	---	---
20.0	U	- .09	- .11	---	- .08	- .06	---
	L	- .04	- .12	---	- .08	- .08	- .08
30.0	U	- .10	- .14	- .15	- .09	- .10	- .07
	L	- .11	- .14	- .12	- .10	- .08	- .06
40.0	U	- .12	- .15	- .12	- .09	- .08	- .09
	L	- .13	- .14	- .12	- .08	- .08	- .09
50.0	U	- .14	---	- .13	- .07	- .07	- .07
	L	- .13	- .13	- .10	- .07	- .08	- .08
60.0	U	- .12	- .12	- .06	---	- .03	- .04
	L	- .13	- .11	- .08	- .03	- .04	- .04
70.0	U	---	- .16	---	- .06	---	- .02
	L	---	- .11	- .04	---	- .02	- .05
73.0	U	---	---	---	- .08	- .02	- .02
80.0	U	---	- .10	- .05	- .04	.02	- .04
	L	---	- .10	- .03	.07	- .02	---
85.0	U	---	- .08	.01	.03	.01	---
	L	---	- .08	- .01	- .01	0	---
90.0	U	---	- .08	0	- .03	.03	.02
	L	---	- .09	0	- .01	.02	---
95.0	U	---	- .08	.02	- .03	.04	.03
	L	---	- .09	---	- .01	.04	---

$\alpha = 4.0$

Orifice Location Percent Chord		STATIONS I	A	B	C	D	E
0		-0.54	-0.79	-0.94	-0.88	-0.89	-0.69
0.25	U	- .90	-1.21	- .92	-1.22	-1.16	-1.04
	L	.10	.06	.04	---	.04	0
0.5	U	- .82	- .98	-1.06	-1.10	-1.08	- .94
	L	.16	.06	.17	.13	.17	.19
1.0	U	- .64	---	- .88	- .94	- .90	- .88
	L	.22	---	.24	.22	.22	.22
1.5	U	- .56	- .62	---	- .68	- .64	- .91
	L	---	.16	---	.20	.20	---
2.5	U	- .50	- .56	---	- .56	- .55	- .62
	L	.16	.16	.20	.20	.20	.12
3.5	U	- .43	- .49	- .51	- .47	- .49	- .39
	L	.14	---	.18	.17	.18	0
5.0	U	- .37	- .43	- .44	- .39	- .40	- .38
	L	.12	.12	.16	.10	.23	.34
7.5	U	- .30	- .36	- .34	---	- .36	- .32
	L	.06	.08	---	.13	.13	.14
10.0	U	- .28	- .35	- .31	- .30	- .32	- .30
	L	.06	---	- .01	.10	---	---
15.0	U	- .26	- .57	---	---	- .16	- .20
17.5	U	- .24	- .28	---	---	---	---
20.0	U	- .23	- .28	---	- .24	- .22	---
	L	0	- .02	---	.05	.04	.04
30.0	U	- .22	- .26	- .24	- .20	- .22	- .16
	L	- .02	- .06	- .02	0	- .01	- .01
40.0	U	- .22	- .24	- .20	- .17	- .17	- .15
	L	- .04	- .08	- .02	0	0	- .02
50.0	U	- .21	---	- .18	- .14	- .13	- .11
	L	- .06	- .08	.01	- .02	- .02	- .02
60.0	U	- .18	- .18	- .10	---	- .04	- .03
	L	- .08	- .08	- .02	.01	0	.02
70.0	U	---	- .20	---	- .09	---	- .03
	L	---	- .10	- .04	---	.02	- .02
73.0	U	---	---	---	- .09	- .04	- .02
80.0	U	---	- .15	.14	- .08	0	- .04
	L	---	- .08	0	.10	- .04	.02
85.0	U	---	- .11	- .01	0	0	---
	L	---	- .08	0	- .02	0	.03
90.0	U	---	- .11	0	- .04	.02	.02
	L	---	- .08	.02	- .02	.03	.05
95.0	U	---	- .09	.02	- .04	.02	.02
	L	---	- .08	---	- .02	.04	.06

[1]Pressure coefficients tabulated are defined as $(p_l - p)/q$

TABLE IV.- CONTINUED

$\alpha = 6.1$

Orifice Location Percent Chord		STATIONS I	A	B	C	D	E
0		-1.34	-1.98	-2.52	-2.20	-2.28	-1.91
0.25	U	-1.71	-2.26	-1.90	-2.42	-2.36	-2.12
	L	-.18	-.38	-.44	---	-.42	---
0.5	U	-1.48	-1.75	-1.98	-2.12	-2.09	-1.84
	L	.04	-.16	-.08	-.13	-.10	-.02
1.0	U	-1.06	---	-1.44	-1.41	-1.32	-1.41
	L	.19	---	.18	.20	.14	.15
1.5	U	-.90	-1.06	---	-1.18	-1.12	-1.16
	L	---	.16	.23	.21	.18	---
2.5	U	-.74	-.88	---	-.90	-1.00	-.95
	L	.22	.22	.24	.24	.24	.15
3.5	U	-.64	-.75	-.77	-.73	-.75	-.64
	L	.21	---	.22	.24	.23	---
5.0	U	-.53	-.62	-.64	-.60	-.62	-.57
	L	.18	.19	.21	.20	.29	---
7.5	U	-.42	-.42	-.50	---	-.52	-.46
	L	.14	.16	---	.19	.20	.21
10.0	U	-.38	-.47	-.43	-.43	-.44	-.41
	L	.13	---	.16	.17	---	---
15.0	U	-.34	-.38	---	---	-.24	-.28
17.5	U	-.30	-.35	---	---	---	---
20.0	U	-.29	-.34	---	-.31	-.30	---
	L	.03	.05	---	.10	.10	.10
30.0	U	-.26	-.30	-.39	-.26	-.26	-.20
	L	.03	0	.04	.06	.06	.02
40.0	U	-.24	-.28	-.22	-.21	-.20	-.18
	L	0	-.02	.03	.04	.04	.02
50.0	U	-.24	---	-.20	-.16	-.15	-.13
	L	-.02	-.04	.02	.02	.02	.02
60.0	U	-.20	-.20	-.11	---	-.04	-.03
	L	-.03	-.04	.01	.04	.03	.04
70.0	U	---	-.20	---	-.10	---	-.03
	L	---	-.06	-.04	---	.04	0
73.0	U	----	---	---	-.10	-.04	-.02
80.0	U	---	---	---	-.07	-.01	.03
	L	---	-.04	.04	.11	-.03	.03
85.0	U	---	-.11	0	.01	-.01	---
	L	---	-.04	.04	-.01	.01	.04
90.0	U	---	-.10	.01	-.04	.02	.03
	L	---	-.05	.04	-.01	.04	.05
95.0	U	---	-.08	.03	-.04	.04	.04
	L	---	-.06	---	-.01	.05	.06

$\alpha = 8.1$

Orifice Location Percent Chord		STATIONS I	A	B	C	D	E
0		-2.53	-3.70	-4.73	-4.23	-4.37	-3.72
0.25	U	-2.83	-3.62	-3.29	-4.16	-4.01	-3.59
	L	-.72	-1.11	-1.34	---	-1.28	---
0.5	U	-2.18	-2.61	-3.05	-3.30	-3.06	-2.74
	L	-.28	-.65	-.60	-.62	-.62	-.47
1.0	U	-1.56	---	-2.23	-2.24	-2.08	-2.19
	L	.06	---	-.06	-.04	-.10	-.09
1.5	U	-1.32	-1.58	---	-1.76	-1.68	-1.66
	L	---	.02	.12	.08	.06	---
2.5	U	-1.06	-1.27	---	-1.31	-1.28	-1.27
	L	.21	.17	.22	.19	.21	.12
3.5	U	-.89	-1.06	-1.08	-1.06	-1.06	-.94
	L	.22	---	.24	.24	.24	---
5.0	U	---	-.88	-.88	-.86	-.89	-.82
	L	.22	.21	.24	.24	.30	---
7.5	U	-.57	-.72	-.69	---	-.75	-.67
	L	.19	.18	---	.22	.24	.24
10.0	U	-.50	-.64	-.60	-.58	-.48	-.58
	L	.18	---	.20	.21	---	.08
15.0	U	-.43	-.50	---	---	-.36	-.40
17.5	U	-.39	-.45	---	---	---	---
20.0	U	-.36	-.44	---	-.41	-.38	---
	L	.06	.08	---	.15	.14	---
30.0	U	-.30	-.36	-.35	-.32	-.32	-.26
	L	.09	.03	.09	.10	.11	.04
40.0	U	-.28	-.33	-.26	-.25	-.23	-.21
	L	.04	0	.06	.05	.08	.04
50.0	U	-.27	---	-.23	-.18	-.16	-.15
	L	.02	-.01	.04	.04	.06	.03
60.0	U	-.23	-.23	-.13	---	-.05	-.04
	L	.01	-.02	.03	.06	.06	.05
70.0	U	---	-.23	---	-.11	---	-.05
	L	---	-.04	.05	---	.06	.01
73.0	U	---	---	---	-.10	-.06	-.04
80.0	U	---	---	---	-.06	-.02	-.04
	L	---	-.02	.04	.12	-.04	-.03
85.0	U	---	-.10	-.03	0	-.01	---
	L	---	-.04	.04	-.02	.02	-.04
90.0	U	---	-.10	0	-.05	.01	-.01
	L	---	-.04	.04	-.02	.05	-.04
95.0	U	---	-.10	.02	-.05	.02	-.03
	L	---	-.04	---	-.02	.05	-.04

NACA

TABLE IV.- CONTINUED

$\alpha = 9.1$

Orifice Location Percent Chord		STATIONS I	A	B	C	D	E
0		-3.06	-4.66	-5.88	-5.30	-5.02	-2.50
0.25	U	-3.32	-4.38	-4.01	-5.05	-4.21	-2.20
	L	- .98	-1.55	-1.80	---	-1.58	---
0.5	U	-2.44	-3.15	-3.59	-3.73	-3.23	-1.78
	L	- .44	- .96	- .86	- .93	- .84	- .41
1.0	U	-1.77	---	-2.57	-2.58	-2.15	-1.58
	L	- .02	---	- .18	- .18	- .18	- .06
1.5	U	-1.48	-1.84	---	-1.98	-1.72	-1.39
	L	---	- .07	.06	- .01	.02	---
2.5	U	-1.37	-1.45	---	-1.45	-1.38	-1.32
	L	.21	.14	.20	.16	.20	.10
3.5	U	- .97	-1.20	-1.22	-1.19	-1.27	-1.29
	L	.24	---	.22	.22	.25	---
5.0	U	- .79	-1.01	-1.01	-1.02	-1.28	-1.31
	L	.25	.22	.24	.23	.32	---
7.5	U	- .62	- .82	- .80	---	- .78	-1.15
	L	.20	.20	---	.25	.26	.25
10.0	U	- .54	- .72	- .70	- .73	- .65	- .98
	L	.20	---	.21	.23	---	---
15.0	U	- .46	- .56	---	---	- .45	- .64
17.5	U	- .42	- .49	---	---	---	---
20.0	U	- .39	- .48	---	- .45	- .44	---
	L	.06	.11	---	.17	.18	.14
30.0	U	- .32	- .40	- .38	- .34	- .32	- .28
	L	.10	.06	.09	.12	.13	.06
40.0	U	- .30	- .34	- .30	- .25	- .23	- .23
	L	.06	.02	.07	.09	.10	.05
50.0	U	- .28	---	- .25	- .20	- .17	- .16
	L	.03	.01	.04	.07	.08	.04
60.0	U	- .24	- .24	- .15	---	- .04	- .03
	L	.02	0	.03	.08	.08	.05
70.0	U	---	- .23	---	- .12	---	- .03
	L	---	- .02	.04	---	.08	0
73.0	U	---	---	---	- .10	- .06	- .05
80.0	U	---	---	---	- .06	- .02	- .08
	L	---	- .01	.05	.13	- .04	.03
85.0	U	---	- .12	- .04	- .01	- .02	---
	L	---	- .02	.04	- .01	.03	.03
90.0	U	---	- .10	- .02	- .04	0	0
	L	---	- .03	.04	- .01	.04	.04
95.0	U	---	- .08	0	- .04	0	0
	L	---	- .04	---	- .01	.04	.04

$\alpha = 10.1$

Orifice Location Percent Chord		STATIONS I	A	B	C	D	E
0		-3.86	-5.56	-5.16	-1.43	-1.34	-0.70
0.25	U	-4.05	-4.95	-3.42	-1.26	-1.08	- .62
	L	-1.37	-2.00	-1.82	---	- .58	---
0.5	U	-2.88	-3.47	-2.82	-1.22	-1.09	- .58
	L	- .68	-1.29	- .93	- .41	- .27	- .06
1.0	U	-2.08	---	-2.06	-1.18	-1.28	- .50
	L	- .12	---	- .23	.03	.03	.12
1.5	U	-1.72	-1.96	---	-1.16	-1.13	- .42
	L	---	- .15	.03	.11	.11	---
2.5	U	-1.34	-1.43	---	-1.17	- .82	- .41
	L	.19	.12	.18	.22	.23	.14
3.5	U	-1.11	-1.36	-1.40	-1.18	- .75	- .57
	L	.24	---	.23	.25	.25	---
5.0	U	- .90	-1.25	-1.47	-1.16	- .73	- .54
	L	.26	.24	.25	.25	.31	---
7.5	U	- .72	-1.07	-1.39	---	- .78	- .53
	L	.22	.23	---	.26	.25	.26
10.0	U	- .62	- .88	-1.19	-1.22	- .78	- .52
	L	.21	---	.24	.25	---	---
15.0	U	- .52	- .58	---	---	- .61	- .52
17.5	U	- .46	- .51	---	---	---	---
20.0	U	- .43	- .50	---	- .86	- .86	---
	L	.07	.14	---	.19	.16	.16
30.0	U	- .36	- .41	- .40	- .48	- .84	- .66
	L	.11	.09	.12	.14	.12	.08
40.0	U	- .34	- .35	- .30	- .32	- .51	- .66
	L	.06	.06	.09	.10	.09	- .06
50.0	U	- .32	---	- .26	---	- .26	- .58
	L	.04	.03	.07	.07	.06	- .05
60.0	U	- .26	- .24	- .16	- .07	- .09	- .12
	L	.02	.02	.05	.08	.06	- .06
70.0	U	---	- .24	---	- .12	---	- .19
	L	---	0	.06	---	.06	- .02
73.0	U	---	---	---	- .10	- .07	- .16
80.0	U	---	---	---	- .05	- .02	- .09
	L	---	0	.06	.14	- .06	.04
85.0	U	---	- .14	- .05	- .02	- .03	---
	L	---	- .02	.04	- .01	.02	.05
90.0	U	---	- .12	- .02	- .06	- .01	- .01
	L	---	- .03	.04	- .01	.03	.05
95.0	U	---	- .10	0	- .06	- .01	.02
	L	---	- .05	---	- .01	.03	.06

TABLE IV.- CONTINUED

α = 11.2

Orifice Location Percent Chord		STATIONS I	A	B	C	D	E
0		-4.59	-3.16	-1.16	-0.74	-0.71	-0.34
0.25	U	-4.70	-2.20	- .94	- .68	- .58	- .29
	L	-1.76	-1.54	- .70	---	- .32	---
0.5	U	-3.28	-2.00	- .94	- .67	- .59	- .28
	L	- .94	-1.06	- .34	- .24	- .10	.05
1.0	U	-2.32	---	- .93	- .66	- .68	- .28
	L	- .26	---	.01	.09	.10	.16
1.5	U	-1.90	-1.74	---	- .66	- .68	- .28
	L	---	- .11	.16	.15	.16	---
2.5	U	-1.48	-1.74	---	- .67	- .56	- .28
	L	.14	.12	.24	.24	.26	.15
3.5	U	-1.22	-1.76	- .98	- .67	- .50	- .28
	L	.22	---	.26	.27	.27	---
5.0	U	-1.02	-1.81	-1.02	- .68	- .48	- .28
	L	.24	.25	.28	.27	.33	---
7.5	U	- .86	-1.80	-1.06	---	- .50	- .29
	L	.23	.25	---	.27	.26	.25
10.0	U	- .72	-1.70	-1.14	- .73	- .50	- .30
	L	.22	---	.25	.25	---	---
15.0	U	- .57	-1.10	---	---	- .55	- .30
17.5	U	- .50	- .66	---	---	---	---
20.0	U	- .44	- .58	---	- .85	- .54	---
	L	.09	.16	---	.20	.18	.15
30.0	U	- .39	- .48	- .94	- .98	- .65	- .40
	L	.15	.11	.15	.14	.14	.08
40.0	U	- .36	- .37	- .19	- .98	- .82	- .46
	L	.10	.08	.12	.11	.11	.06
50.0	U	- .34	---	- .18	- .77	- .92	- .60
	L	.08	.06	.09	.09	.08	.04
60.0	U	- .28	- .28	- .10	---	- .19	- .30
	L	.06	.04	.07	.10	.08	.04
70.0	U	---	- .26	---	- .14	---	- .70
	L	---	0	.08	---	.08	- .01
73.0	U	---	---	---	- .10	- .37	- .82
80.0	U	---	---	---	- .02	.12	- .60
	L	---	.02	.08	.16	- .15	- .01
85.0	U	---	- .14	- .01	.02	- .05	---
	L	---	.01	.06	- .02	.05	- .01
90.0	U	---	- .12	- .01	- .10	.01	- .36
	L	---	0	.06	- .02	.07	- .03
95.0	U	---	- .09	.01	- .10	.04	- .24
	L	---	- .02	---	- .02	.08	- .04

α = 12.2

Orifice Location Percent Chord		STATIONS I	A	B	C	D	E
0		-5.56	-1.94	-0.98	-0.62	-0.54	-0.24
0.25	U	-5.59	-1.44	- .82	- .58	- .44	- .21
	L	-2.26	-1.24	- .68	---	- .25	---
0.5	U	-3.81	-1.40	- .84	- .58	- .44	- .19
	L	-1.26	- .88	- .34	- .23	- .06	.08
1.0	U	-2.64	---	- .84	- .58	- .51	- .20
	L	- .41	---	- .01	.09	.12	.18
1.5	U	-2.12	-1.32	---	- .58	- .51	- .20
	L	---	- .07	.14	.16	.18	---
2.5	U	-1.63	-1.35	---	- .58	- .45	- .19
	L	.11	.14	.23	.24	.27	.16
3.5	U	-1.40	-1.39	- .90	- .58	- .42	- .19
	L	.20	---	.26	.28	.28	---
5.0	U	-1.28	-1.42	- .92	- .59	- .39	- .21
	L	.25	.26	.26	.28	.34	---
7.5	U	-1.10	-1.47	- .94	---	- .42	- .21
	L	.28	.26	---	.28	.28	.26
10.0	U	- .82	-1.60	-1.01	- .63	- .42	- .22
	L	.28	---	.25	.28	---	---
15.0	U	- .62	-1.70	---	---	- .45	- .22
17.5	U	- .56	-1.60	---	---	---	---
20.0	U	- .48	-1.42	---	- .74	- .48	---
	L	.12	.18	---	.21	.20	.16
30.0	U	- .44	- .34	-1.46	- .92	- .54	- .30
	L	.18	.13	.14	.16	.16	.08
40.0	U	- .40	- .30	- .75	-1.11	- .66	- .32
	L	.14	.10	.12	.13	.13	.05
50.0	U	- .36	---	- .20	-1.06	- .89	- .38
	L	.12	.07	.09	.10	.09	.05
60.0	U	- .30	- .26	- .06	---	- .24	- .32
	L	.08	.04	.07	.10	.08	.02
70.0	U	---	- .26	---	- .37	---	- .66
	L	---	.02	.08	---	.08	- .04
73.0	U	---			- .30	- .68	- .78
80.0	U	---	---	---	- .16	- .40	- .32
	L	---	.03	.08	- .16	- .18	- .06
85.0	U	---	- .17	0	- .03	- .30	---
	L	---	.01	.06	- .03	.04	- .08
90.0	U	---	- .14	- .01	- .14	- .18	- .52
	L	---	- .02	.06	- .03	.05	- .12
95.0	U	---	- .10	.01	- .14	- .09	- .64
	L	---	- .04	---	- .03	.04	- .18

TABLE IV.- CONTINUED

$\alpha = 14.2$

Orifice Location Percent Chord		STATIONS I	A	B	C	D	E
0		-6.68	-1.49	-0.86	-0.46	-0.36	-0.26
0.25	U	-6.00	-1.20	- .75	- .41	- .28	- .22
	L	-3.26	-1.25	- .76	---	- .18	---
0.5	U	-3.70	-1.17	- .78	- .41	- .30	- .21
	L	-1.95	- .95	- .43	- .20	- .18	.05
1.0	U	-2.78	---	- .77	- .41	- .31	- .22
	L	- .82	---	- .07	.09	- .03	.14
1.5	U	-2.63	-1.14	---	- .41	- .30	- .24
	L	---	- .13	.10	.16	.12	---
2.5	U	-2.58	-1.17	---	- .41	- .28	- .22
	L	- .01	.13	.21	.24	.17	.14
3.5	U	-2.58	-1.20	- .82	- .41	- .28	- .22
	L	.15	---	.24	.27	.25	---
5.0	U	-2.47	-1.24	- .84	- .42	- .28	- .23
	L	.26	.27	.27	.28	.26	---
7.5	U	-2.02	-1.29	- .85	---	- .28	- .24
	L	.29	.28	---	.28	.26	.24
10.0	U	-1.46	-1.36	- .90	- .45	- .28	- .25
	L	.30	---	.28	.27	---	---
15.0	U	- .75	-1.47	---	---	- .34	- .22
17.5	U	- .65	-1.80	---	---	---	---
20.0	U	- .58	-2.12	---	- .54	- .32	---
	L	.14	.23	---	.22	.17	.14
30.0	U	- .50	-1.17	-1.35	- .58	- .37	- .28
	L	.24	.17	.18	.16	.12	.07
40.0	U	- .46	- .26	-1.44	- .68	- .36	- .32
	L	.19	.14	.15	.13	.09	.03
50.0	U	- .42	---	- .97	-1.06	- .44	- .33
	L	.15	.10	.12	.09	.04	0
60.0	U	- .38	- .23	- .34	---	- .32	- .34
	L	.12	.08	.10	.09	.03	- .01
70.0	U	---	- .26	---	- .84	---	- .45
	L	---	.04	.11	---	.02	- .08
73.0	U	---			- .77	- .72	- .50
80.0	U	---	---	---	- .54	- .59	- .34
	L	---	.04	.10	.14	- .39	- .13
85.0	U	---	- .15	.02	- .32	- .58	---
	L	---	.02	.09	- .04	- .12	- .16
90.0	U	---	- .14	.02	- .24	- .55	- .75
	L	---	- .01	.08	- .04	- .14	- .22
95.0	U	---	- .12	.04	- .24	- .52	-1.06
	L	---	- .03	---	- .04	- .22	- .32

$\alpha = 18.2$

Orifice Location Percent Chord		STATIONS I	A	B	C	D	E
0		-3.73	-1.47	-0.70	-0.40	-0.32	-0.30
0.25	U	-2.96	-1.25	- .64	- .34	- .27	- .28
	L	-3.14	-1.52	- .77	---	- .24	---
0.5	U	-2.91	-1.21	- .66	- .34	- .28	- .26
	L	-2.08	-1.26	- .47	- .25	- .09	- .05
1.0	U	-2.91	---	- .66	- .34	- .28	- .27
	L	- .96	---	- .14	.05	.08	.08
1.5	U	-2.95	-1.18	---	- .34	- .28	- .28
	L	---	- .28	.06	.13	.14	---
2.5	U	-3.04	-1.21	---	- .34	- .28	- .27
	L	- .07	.04	.18	.22	.24	.12
3.5	U	-3.16	-1.24	- .69	- .35	- .28	- .27
	L	.14	---	.24	.26	.27	---
5.0	U	-3.45	-1.26	- .70	- .35	- .27	- .28
	L	.28	.25	.28	.29	.32	---
7.5	U	-4.01	-1.28	- .73	---	- .29	- .30
	L	.34	.30	---	.30	.29	.27
10.0	U	-3.76	-1.34	- .78	- .39	- .29	- .30
	L	.34	---	- .49	.30	---	---
15.0	U	-1.58	-1.35	---	---	- .27	- .28
17.5	U	- .96	-1.37	---	---	---	---
20.0	U	- .72	-1.53	---	- .45	- .34	---
	L	.38	.27	---	.24	.22	.18
30.0	U	- .52	-2.09	- .92	- .48	- .37	- .34
	L	.19	.22	.22	.18	.16	.08
40.0	U	- .48	-1.21	-1.25	- .51	- .39	- .35
	L	.34	.19	.18	.14	.12	.06
50.0	U	- .45	---	-1.30	- .64	- .43	- .38
	L	.28	.16	.15	.08	.06	.03
60.0	U	- .39	- .28	- .88	---	- .38	- .36
	L	.24	.13	.12	.06	.02	.02
70.0	U	- .11	- .30	---	- .85	---	- .43
	L	.19	.08	.12	---	- .02	- .07
73.0	U	---	---	---	- .90	- .56	- .45
80.0	U	---	---	---	- .78	- .57	- .38
	L	---	.07	.09	.06	- .35	- .09
85.0	U	---	- .15	- .22	- .69	- .74	---
	L	---	.05	.06	- .08	- .21	- .12
90.0	U	---	- .15	- .14	- .36	- .96	- .57
	L	---	.04	.05	- .08	- .26	- .16
95.0	U	---	- .12	- .08	- .36	-1.24	- .59
	L	---	0	---	- .08	- .40	- .22

TABLE IV.- CONCLUDED

$\alpha = 22.3$

Orifice Location Percent Chord		STATIONS I	A	B	C	D	E
0		-3.67	-1.20	-0.66	-0.40	-0.38	-0.34
0.25	U	-3.12	-1.07	- .60	- .35	- .34	- .32
	L	-3.78	-1.50	- .82	---	- .37	---
0.5	U	-3.14	-1.04	- .63	- .35	- .34	- .30
	L	-2.68	-1.32	- .56	- .35	- .22	- .16
1.0	U	-3.18	---	- .62	- .36	- .35	- .32
	L	-1.36	---	- .20	- .01	0	.02
1.5	U	-3.23	-1.00	---	- .36	- .35	- .34
	L	---	- .34	0	.09	.09	---
2.5	U	-3.32	-1.03	---	- .36	- .35	- .32
	L	- .24	.01	.15	.20	.22	.13
3.5	U	-3.36	-1.06	- .68	- .37	- .35	- .30
	L	.04	---	.22	.26	.26	---
5.0	U	-3.39	-1.10	- .71	- .38	- .35	- .33
	L	.24	.26	.26	.29	.32	---
7.5	U	-3.95	-1.13	- .73	---	- .37	- .34
	L	.36	.34	---	.32	.32	.30
10.0	U	-4.39	-1.18	- .77	- .44	- .37	- .36
	L	.42	---	.35	.32	---	---
15.0	U	-3.36	-1.20	---	---	- .32	- .34
17.5	U	-2.34	-1.24	---	---	---	---
20.0	U	-1.59	-1.34	---	- .49	- .42	---
	L	.24	.35	---	.28	.26	.23
30.0	U	- .74	-1.64	- .90	- .51	- .45	- .39
	L	.41	.30	.25	.22	.21	.12
40.0	U	- .62	-1.53	- .98	- .55	- .47	- .10
	L	.36	.27	.20	.17	.16	.12
50.0	U	- .56	---	-1.04	- .62	- .50	- .10
	L	.31	.23	.15	.10	.10	.09
60.0	U	- .47	- .62	- .96	---	- .42	- .36
	L	.25	.20	.10	.07	.06	.07
70.0	U	---	- .45	---	- .75	---	- .42
	L	---	.15	.08	---	.02	- .02
73.0	U	---	---	---	- .78	- .58	- .42
80.0	U	---	---	---	- .80	- .62	- .38
	L	---	.12	.03	.06	- .38	- .04
85.0	U	---	- .22	- .59	- .80	- .72	---
	L	---	.09	- .02	- .12	- .16	- .06
90.0	U	---	- .18	- .44	- .44	- .78	- .45
	L	---	.06	- .06	- .12	- .20	- .10
95.0	U	---	- .14	- .44	- .44	- .84	- .44
	L	---	.02	---	- .12	- .31	- .15

$\alpha = 27.3$

Orifice Location Percent Chord		STATIONS I	A	B	C	D	E
0		-2.76	-1.17	-0.66	-0.50	-0.48	-0.42
0.25	U	-2.61	-1.10	- .61	- .46	- .46	- .40
	L	-3.50	-1.60	- .90	---	- .57	---
0.5	U	-2.61	-1.08	- .62	- .46	- .46	- .38
	L	-2.76	-1.58	- .78	- .55	- .42	- .32
1.0	U	-2.66	---	- .62	- .46	- .46	- .40
	L	-1.59	---	- .32	- .15	- .15	- .10
1.5	U	-2.72	-1.06	---	- .46	- .46	- .40
	L	---	- .56	- .10	- .02	- .01	---
2.5	U	-2.78	-1.10	---	- .47	- .48	- .40
	L	- .40	- .15	.10	.13	.16	.09
3.5	U	-2.81	-1.14	- .66	- .48	- .48	- .39
	L	- .07	---	.18	.22	.24	---
5.0	U	-2.86	-1.16	- .68	- .48	- .48	- .41
	L	.18	.16	.21	.26	.30	---
7.5	U	-2.97	-1.18	- .69	---	- .49	- .42
	L	.34	.32	---	.33	.33	.32
10.0	U	-3.04	-1.21	- .72	- .52	- .49	- .43
	L	.42	---	.36	.34	---	---
15.0	U	-2.96	-1.25	---	---	- .43	- .43
17.5	U	-2.80	-1.26	---	---	---	---
20.0	U	-2.56	-1.30	---	- .55	- .52	---
	L	.28	.37	---	.34	.31	.28
30.0	U	-1.87	-1.40	- .80	- .58	- .54	- .48
	L	.49	.35	.31	.28	.27	.18
40.0	U	-1.24	-1.40	- .86	- .62	- .53	- .46
	L	.44	.32	.26	.23	.22	.18
50.0	U	- .94	---	- .92	- .66	- .53	- .43
	L	.39	.28	.20	.16	.16	.14
60.0	U	- .74	-1.08	- .90	---	- .49	- .38
	L	.32	.24	.14	.12	.11	.12
70.0	U	---	- .94	---	- .81	---	- .41
	L	---	.17	.09	---	.06	.04
73.0	U	---	---	---	- .85	- .62	- .42
80.0	U	---	---	---	- .92	- .63	- .40
	L	---	- .13	0	.10	- .43	0
85.0	U	---	- .54	- .86	- .94	- .66	---
	L	---	.08	- .08	- .18	- .10	- .02
90.0	U	---	- .44	- .90	- .55	- .66	- .40
	L	---	.04	- .18	- .18	- .14	- .06
95.0	U	---	- .35	- .92	- .55	- .66	- .40
	L	---	- .03	---	- .18	- .22	- .11

NACA

TABLE V.- TABULATED PRESSURE COEFFICIENTS[1] FOR THE WING WITH DOUBLE-SLOTTED FLAPS DEFLECTED 55°. $R = 8.0 \times 10^6$

WING $\alpha = -8.0$

Orifice Location Percent Chord		STATIONS I	A	B	C	D	E
0		-1.43	-1.44	-1.28	-1.07	-1.82	-2.02
0.25	U	- .44	- .26	- .20	- .11	- .30	- .54
	L	-2.02	-1.76	-1.38	-1.50	-1.82	---
0.5	U	- .04	.08	.11	.09	.04	- .04
	L	-1.80	-1.56	-1.24	-1.32	-1.65	-1.85
1.0	U	.14	---	.23	.22	.21	.15
	L	-1.16	---	- .80	- .86	-1.12	-1.21
1.5	U	.18	.20	---	.24	.26	.21
	L	---	- .90	- .64	- .76	- .90	---
2.5	U	.20	.20	.22	.23	.26	.22
	L	- .77	---	- .52	- .58	- .68	- .66
3.5	U	.20	.18	.17	.20	.23	.25
	L	- .64	- .71	- .42	- .53	- .57	---
5.0	U	.18	.16	.14	.18	.21	.22
	L	0	- .47	- .37	- .48	- .47	---
7.5	U	.16	.13	.12	.14	.15	.18
	L	- .20	- .32	---	---	- .34	- .41
10.0	U	.14	.09	.08	.10	.15	.15
	L	- .36	---	- .22	- .26	---	---
12.5	U	---	---	---	---	---	---
15.0	U	.08	.05	.04	.04	.12	.13
17.5	U	.08	.02	.02	---	.09	---
20.0	U	.08	- .01	---	.04	.09	---
	L	- .08	- .16	---	- .18	- .22	- .23
30.0	U	.02	- .09	- .10	- .01	.03	.04
	L	- .19	- .10	- .05	- .16	- .17	---
40.0	U	- .03	- .16	- .13	- .04	.02	.01
	L	- .17	- .04	0	- .12	- .13	- .16
50.0	U	- .08	---	- .20	- .07	0	0
	L	---	.03	.06	- .10	- .10	- .11
60.0	U	- .12	- .30	- .20	- .08	- .04	- .02
	L	- .07	.08	.09	- .10	- .06	- .06
70.0	U	---	- .48	- .37	- .11	---	.02
	L	---	.12	.10	- .13	- .03	- .04
73.0	U	---	---	---	- .13	- .01	.02
80.0	U	---	- .70	---	- .05	.04	---
	L	---	.02	- .14	- .10	0	.02
85.0	U	---			- .03	.01	---
	L	---			.02	- .02	---
90.0	U	---			- .02	.02	.02
	L	---			.02	0	.02
95.0	U	---			---	.02	.02
	L	---					

WING $\alpha = 0.1$

Orifice Location Percent Chord		STATIONS I	A	B	C	D	E
0		.11	-0.28	-0.84	-0.82	-0.49	-0.18
0.25	U	- .12	- .71	- .88	-1.16	- .80	- .53
	L	.19	.16	.04	.08	.17	---
0.5	U	- .19	- .62	- .98	-1.07	- .79	- .53
	L	.16	.16	.17	.14	.21	.23
1.0	U	- .19	---	- .82	- .89	- .66	- .53
	L	.12	---	.23	.23	.20	.22
1.5	U	- .19	- .48	---	- .68	- .59	- .46
	L	---	.20	.23	.20	.20	---
2.5	U	- .19	- .40	- .53	- .56	- .43	- .39
	L	.06	---	.21	.20	.17	.15
3.5	U	- .19	- .35	- .52	- .47	- .39	- .26
	L	.04	.15	.19	.15	.15	---
5.0	U	- .17	- .33	- .46	- .41	- .33	- .26
	L	.03	.22	.18	.15	.19	---
7.5	U	- .15	- .31	- .38	- .36	- .33	- .24
	L	- .04	.12	---	---	.13	.09
10.0	U	- .15	- .31	- .38	- .33	- .27	- .24
	L	.02	---	.12	.12	---	---
12.5	U	---	---	---	---	---	---
15.0	U	- .16	- .28	- .33	- .15	- .24	- .12
17.5	U	- .16	- .31	- .33	---	- .22	---
20.0	U	- .16	- .30	---	- .27	- .21	---
	L	.02	.08	---	.07	.04	.02
30.0	U	- .17	- .33	- .37	- .26	- .22	- .15
	L	- .01	.08	.08	.03	.02	---
40.0	U	- .20	- .36	- .36	- .25	- .18	- .15
	L	- .01	.10	.10	.02	0	- .03
50.0	U	- .23	---	- .39	- .24	- .16	- .12
	L	---	.14	.13	0	- .01	- .01
60.0	U	- .24	- .42	- .34	- .13	- .10	- .06
	L	.04	.17	.24	0	.01	.01
70.0	U	---	- .59	- .48	- .21	---	- .05
	L	---	.19	.24	- .06	.02	.01
73.0	U	---	---	---	- .22	- .08	.05
80.0	U	---	- .78	---	- .14	- .04	---
	L	---			- .03	.03	.02
85.0	U	---			- .10	- .04	---
	L	---			.03	0	---
90.0	U	---			- .07	- .01	.01
	L	---			.03	.02	.04
95.0	U	---			---	.01	.02
	L	---			.03	.02	.04

FORE FLAP

Orifice Location Percent Chord		STATIONS A	B
0		-1.48	-1.26
1.0	U	-2.94	-1.90
	L	.29	.26
2.0	U	-2.78	-1.72
	L	.44	.22
3.0	U	-2.51	-1.46
	L	.40	.17
4.0	U	-1.84	-1.17
	L	.34	---
5.0	U	-1.42	-1.03
	L	.24	.01
6.0	U	---	---
	L	.04	- .07

MAIN FLAP

Orifice Location Percent Chord		STATIONS A	B
75.0		-0.28	0.07
75.25	U	---	---
	L	---	- .24
75.5	U	- .64	0
	L	.18	- .07
76.0	U	- .83	-1.01
	L	.38	.18
77.5	U	-1.39	- .85
	L	.47	.35
80.0	U	-1.04	---
	L	.44	.35
82.5	U	- .79	---
	L	.41	.36
85.0	U	- .64	- .38
	L	.36	.34
90.0	U	- .42	- .29
	L	.28	.24
95.0	U	- .36	- .12
	L	.16	---

FORE FLAP

Orifice Location Percent Chord		STATIONS A	B
0		-1.53	-1.20
1.0	U	-3.05	-1.96
	L	.32	.36
2.0	U	-2.84	-1.74
	L	.44	.10
3.0	U	-2.53	-1.43
	L	.40	.14
4.0	U	-1.85	-1.13
	L	.34	---
5.0	U	-1.39	-1.02
	L	.24	0
6.0	U	---	---
	L	.05	- .10

MAIN FLAP

Orifice Location Percent Chord		STATIONS A	B
75.0		-0.26	0.08
75.25	U	---	---
	L	---	- .20
75.5	U	- .62	- .02
	L	.19	- .06
76.0	U	- .82	-1.04
	L	.40	.16
77.5	U	-1.35	- .26
	L	.48	.31
80.0	U	- .97	---
	L	.46	.33
82.5	U	- .71	---
	L	.43	.36
85.0	U	- .56	- .40
	L	.40	.33
90.0	U	- .38	- .27
	L	.33	.24
95.0	U	- .32	- .13
	L	.22	---

[1]Pressure coefficients tabulated are defined as $(p_l-p)/q$

TABLE V.- CONTINUED

WING $\alpha = 4.2$

Orifice Location Percent Chord		STATIONS I	A	B	C	D	E
0		-0.88	-2.53	-4.76	-4.24	-3.67	-2.72
0.25	U	-1.27	-2.74	-3.42	-4.22	-3.60	-2.80
	L	- .02	- .68	-1.36	-1.21	-1.03	---
0.5	U	-1.13	-2.02	-2.94	-3.37	-2.76	-2.30
	L	.12	- .29	- .59	- .66	- .48	- .22
1.0	U	- .84	---	-2.24	-2.32	-1.92	-1.84
	L	.21	---	- .06	- .06	- .04	.04
1.5	U	- .74	-1.29	---	-1.83	-1.57	-1.44
	L	---	.15	.10	.06	.10	---
2.5	U	- .63	-1.06	-1.31	-1.38	-1.22	-1.14
	L	.19	---	.12	.18	.21	.20
3.5	U	- .55	- .88	-1.14	-1.12	-1.02	- .80
	L	.18	.20	.14	.18	.23	---
5.0	U	- .47	- .76	- .96	- .93	- .84	- .72
	L	0	.22	.14	.22	.28	---
7.5	U	- .39	- .64	- .77	- .76	- .72	- .57
	L	.05	.20	---	---	.23	.21
10.0	U	- .36	- .59	- .68	- .66	- .58	- .51
	L	.12	---	.21	.19	---	---
12.5	U	---	---	---	---	---	---
15.0	U	- .34	- .50	- .56	- .30	- .48	- .32
17.5	U	- .32	- .52	- .56	---	- .45	- .12
20.0	U	- .30	- .48	---	- .48	- .41	---
	L	.04	.14	---	.14	.13	.11
30.0	U	- .28	- .46	- .51	- .43	- .36	- .21
	L	.07	.13	.15	.09	.09	---
40.0	U	- .29	- .47	- .48	- .38	- .29	- .24
	L	.06	.14	.15	.06	.06	.04
50.0	U	- .31	---	- .48	- .33	- .24	- .18
	L	---	.16	.16	.03	.04	.04
60.0	U	- .31	- .49	- .38	- .14	- .12	- .08
	L	.08	.18	.17	.02	.04	.04
70.0	U	---	- .62	- .54	- .27	---	- .08
	L	---	.19	.16	- .04	.05	.03
73.0	U	---	---	---	- .27	- .12	- .06
80.0	U	---	- .81	---	- .18	- .07	---
	L	---			0	.05	.03
85.0	U	---			- .14	- .06	---
	L	---			.02	.01	---
90.0	U	---			- .12	- .03	0
	L	---			.02	.02	.03
95.0	U	---			---	0	.04
	L	---			.02	.02	.04

WING $\alpha = 5.2$

Orifice Location Percent Chord		STATIONS I	A	B	C	D	E
0		-1.36	-3.62	-6.09	-5.48	-4.86	-3.84
0.25	U	-1.74	-3.58	-4.23	-5.27	-4.54	-3.72
	L	- .21	-1.15	-1.89	-1.71	-1.52	---
0.5	U	-1.71	-2.47	-3.61	-3.94	-3.44	-2.86
	L	.03	- .60	- .90	- .98	- .80	- .52
1.0	U	-1.06	---	-2.67	-2.75	-2.32	-2.31
	L	.18	---	- .21	- .21	- .18	- .12
1.5	U	- .92	-1.60	---	-2.15	-1.88	-1.76
	L	---	.10	.02	- .04	.02	---
2.5	U	- .76	-1.29	-1.53	-1.61	-1.42	-1.37
	L	.22	---	.18	.14	.15	.16
3.5	U	- .65	-1.06	-1.32	-1.32	-1.20	-1.02
	L	.21	.21	.22	.16	.22	---
5.0	U	- .55	- .90	-1.10	-1.10	-1.04	- .88
	L	---	.27	.24	.22	.28	---
7.5	U	- .45	- .74	- .88	- .90	- .90	- .72
	L	.10	.26	---	---	.26	.21
10.0	U	- .40	- .67	- .79	- .77	- .66	- .63
	L	.16	---	.22	.20	---	---
12.5	U	---	---	---	---	---	---
15.0	U	- .36	- .55	- .64	- .36	- .56	- .44
17.5	U	- .35	- .56	- .62	---	- .52	---
20.0	U	- .32	- .51	---	- .54	- .47	---
	L	.06	.19	---	.16	.15	.12
30.0	U	- .30	- .48	- .56	- .46	- .40	- .32
	L	.10	.17	.16	.12	.12	---
40.0	U	- .30	- .48	- .50	- .40	- .32	- .28
	L	.08	.17	.16	.08	.08	.03
50.0	U	- .32	---	- .50	- .35	- .26	- .23
	L	---	.19	.16	.06	.06	.02
60.0	U	- .32	- .48	- .37	- .14	- .13	- .12
	L	.11	.22	.18	.04	.06	.03
70.0	U	---	- .62	- .54	- .28	---	- .10
	L	---	.22	.16	- .02	.06	.02
73.0	U	---	---	---	- .28	- .14	- .10
80.0	U	---	- .79	---	- .20	- .08	---
	L	---			.02	.06	.08
85.0	U	---			- .16	- .06	---
	L	---			.03	.02	---
90.0	U	---			- .12	- .03	- .02
	L	---			.03	.04	.03
95.0	U	---			---	- .01	0
	L	---			.03	.04	.03

FORE FLAP

Orifice Location Percent Chord		STATIONS A	B
0		-1.50	-1.14
1.0	U	-3.02	-1.88
	L	.30	.34
2.0	U	-2.80	-1.86
	L	.43	.10
3.0	U	-2.49	-1.34
	L	.38	.14
4.0	U	-1.79	-1.06
	L	.33	---
5.0	U	-1.36	- .97
	L	.23	- .01
6.0	U	---	---
	L	.04	- .08

MAIN FLAP

Orifice Location Percent Chord		STATIONS A	B
75.0		-0.28	0.08
75.25	U	---	---
	L	---	- .22
75.5	U	- .62	.03
	L	.16	- .07
76.0	U	- .82	-1.00
	L	.38	.14
77.5	U	-1.33	- .84
	L	.46	.30
80.0	U	- .94	---
	L	.44	.32
82.5	U	- .70	---
	L	.42	.36
85.0	U	- .55	- .38
	L	.40	.32
90.0	U	- .38	- .26
	L	.33	.25
95.0	U	- .32	- .12
	L	.21	---

FORE FLAP

Orifice Location Percent Chord		STATIONS A	B
0		-1.47	-1.12
1.0	U	-2.98	-1.88
	L	.32	.33
2.0	U	-2.76	-1.66
	L	.44	.10
3.0	U	-2.45	-1.34
	L	.40	.13
4.0	U	-1.76	-1.06
	L	.34	---
5.0	U	-1.34	- .97
	L	.26	- .02
6.0	U	---	---
	L	.06	- .10

MAIN FLAP

Orifice Location Percent Chord		STATIONS A	B
75.0		-0.27	0.08
75.25	U	---	---
	L	---	- .23
75.5	U	- .61	.03
	L	.18	- .09
76.0	U	- .80	-1.00
	L	.37	.14
77.5	U	-1.30	- .83
	L	.46	.29
80.0	U	-1.00	---
	L	.45	.31
82.5	U	- .66	---
	L	.43	.35
85.0	U	- .62	- .38
	L	.41	.32
90.0	U	- .36	- .24
	L	.34	.25
95.0	U	- .30	- .12
	L	.24	---

TABLE V.- CONTINUED

WING α = 6.2

Orifice Location Percent Chord		STATIONS I	A	B	C	D	E
0		-1.80	-4.41	-7.50	-6.54	-3.86	-1.64
0.25	U	-2.18	-4.26	-5.06	-6.12	-3.10	-1.46
	L	- .41	-1.54	-2.48	-2.22	-1.51	---
0.5	U	-1.82	-3.01	-4.23	-4.36	-2.66	-1.34
	L	- .10	- .84	-1.24	-1.33	- .84	- .28
1.0	U	-1.27	---	-3.05	-3.00	-2.28	-1.27
	L	.13	---	- .36	- .37	- .25	0
1.5	U	-1.10	-1.82	---	-2.28	-2.01	-1.30
	L	---	.02	- .07	- .15	- .02	---
2.5	U	-1.00	-1.44	-1.71	-1.74	-1.63	-1.32
	L	.21	---	.15	.08	.14	.18
3.5	U	- .76	-1.20	-1.47	-1.52	-1.48	-1.32
	L	.21	.17	.21	.14	.20	---
5.0	U	- .64	-1.01	-1.24	-1.40	-1.43	-1.32
	L	---	.27	.24	.22	.26	---
7.5	U	- .51	- .82	-1.01	-1.20	-1.18	-1.03
	L	.08	.24	---	---	.24	.22
10.0	U	- .46	- .74	- .88	- .98	-1.01	- .85
	L	.15	---	.24	.22	---	---
12.5	U	---	---	---	---	---	---
15.0	U	- .41	- .60	- .68	- .44	- .77	- .66
17.5	U	- .39	- .61	- .68	---	- .66	---
20.0	U	- .38	- .55	---	- .60	- .58	---
	L	.04	.19	---	.17	.16	.13
30.0	U	- .35	- .51	- .58	- .50	- .44	- .34
	L	.10	.17	.19	.12	.10	---
40.0	U	- .35	- .50	- .51	- .44	- .35	- .28
	L	.07	.18	.19	.09	.08	.04
50.0	U	- .36	---	- .51	- .38	- .28	- .24
	L	---	.19	.19	.06	.04	.04
60.0	U	- .36	- .49	- .36	- .14	- .16	- .12
	L	.09	.21	.20	.04	.04	.04
70.0	U	---	- .62	- .53	- .31	---	- .12
	L	---	.22	.19	- .01	.04	.03
73.0	U	---	---	---	- .30	- .16	- .12
80.0	U	---	- .78	---	- .21	- .12	---
	L	---	.01	- .12	.02	.04	.02
85.0	U	---			- .17	- .10	---
	L	---			.03	- .01	---
90.0	U	---			- .14	- .07	- .04
	L	---			.03	.01	.03
95.0	U	---			---	- .04	0
	L	---			.03	.01	.03

WING α = 7.2

Orifice Location Percent Chord		STATIONS I	A	B	C	D	E
0		-2.54	-5.89	-5.80	-1.66	-1.28	-0.67
0.25	U	-2.88	-5.38	-5.82	-1.61	-1.08	- .61
	L	- .74	-2.22	-3.16	-1.12	- .68	---
0.5	U	-2.21	-3.76	-4.58	-1.59	-1.12	- .58
	L	- .28	-1.32	-1.66	- .70	- .36	- .08
1.0	U	-1.60	---	-3.17	-1.60	-1.26	- .61
	L	.06	---	- .58	- .13	- .04	.08
1.5	U	-1.35	-2.21	---	-1.60	-1.21	- .62
	L	---	- .13	- .21	0	.10	---
2.5	U	-1.08	-1.72	-1.96	-1.64	- .98	- .62
	L	.22	---	.09	.15	.20	.20
3.5	U	- .91	-1.44	-1.88	-1.67	- .91	- .62
	L	.24	.10	.17	.18	.24	---
5.0	U	- .75	-1.22	-1.83	-1.70	- .90	- .66
	L	---	.15	.22	.24	.30	---
7.5	U	- .60	-1.01	-1.52	-1.79	- .94	- .64
	L	.13	.24	---	---	.27	.22
10.0	U	- .54	- .88	-1.04	-1.85	- .96	- .64
	L	.21	---	.26	.24	---	---
12.5	U	---	---	---	---	---	---
15.0	U	- .46	- .72	- .76	- .93	-1.07	- .58
17.5	U	- .43	- .68	- .76	---	-1.08	---
20.0	U	- .40	- .62	---	-1.00	-1.14	---
	L	.08	.20	---	.20	.18	.14
30.0	U	- .35	- .56	- .66	- .44	-1.10	- .75
	L	.14	.18	.20	.15	.14	---
40.0	U	- .35	- .54	- .57	- .39	- .48	- .79
	L	.12	.18	.20	.12	.22	.06
50.0	U	- .36	---	- .56	- .36	- .17	- .72
	L	---	.18	.20	.08	.08	.05
60.0	U	- .35	- .63	- .37	- .14	- .14	- .18
	L	.13	.21	.20	.06	.08	.06
70.0	U	---	- .66	- .56	- .31	---	- .20
	L	---	.21	.19	.01	.08	.04
73.0	U	---	---	---	- .30	- .11	- .13
80.0	U	---	- .84	---	- .22	- .06	---
	L	---	- .01	- .12	.04	.08	.04
85.0	U	---			- .16	- .06	---
	L	---			.04	.03	---
90.0	U	---			- .14	- .03	.02
	L	---			.04	.04	.06
95.0	U	---			---	- .01	.04
	L	---			.04	.04	.06

FORE FLAP

Orifice Location Percent Chord		STATIONS A	B
0		-1.42	-1.08
1.0	U	-2.88	-1.82
	L	.30	.32
2.0	U	-2.67	-1.60
	L	.43	.14
3.0	U	-2.36	-1.30
	L	.38	.14
4.0	U	-1.68	-1.02
	L	.33	---
5.0	U	-1.28	- .93
	L	.24	---
6.0	U	---	---
	L	.06	.07

MAIN FLAP

Orifice Location Percent Chord		STATIONS A	B
75.0		-0.28	0.10
75.25	U	---	---
	L	---	- .21
75.5	U	- .60	.06
	L	.16	- .06
76.0	U	- .77	- .96
	L	.35	.15
77.5	U	-1.26	- .78
	L	.44	.32
80.0	U	- .87	---
	L	.44	.32
82.5	U	- .63	---
	L	.41	.37
85.0	U	- .50	- .35
	L	.38	.34
90.0	U	- .36	- .22
	L	.33	.27
95.0	U	- .30	- .09
	L	.22	---

FORE FLAP

Orifice Location Percent Chord		STATIONS A	B
0		-1.48	-1.08
1.0	U	-2.98	-1.85
	L	.30	.34
2.0	U	-2.74	-1.62
	L	.43	.14
3.0	U	-2.43	-1.31
	L	.39	.15
4.0	U	-1.74	-1.02
	L	.34	---
5.0	U	-1.33	- .94
	L	.24	.01
6.0	U	---	---
	L	.04	- .08

MAIN FLAP

Orifice Location Percent Chord		STATIONS A	B
75.0		-0.28	0.09
75.25	U	---	---
	L	---	- .20
75.5	U	- .62	.02
	L	.16	- .06
76.0	U	- .80	- .96
	L	.36	.15
77.5	U	-1.28	- .80
	L	.46	.32
80.0	U	- .90	---
	L	.47	.33
82.5	U	- .66	---
	L	.42	.38
85.0	U	- .54	- .35
	L	.40	.35
90.0	U	- .36	- .24
	L	.34	.26
95.0	U	- .31	- .09
	L	.24	---

NACA

TABLE V.- CONTINUED

WING $\alpha = 8.2$

Orifice Location Percent Chord		STATIONS I	A	B	C	D	E
0		-3.27	-6.84	-3.88	-1.21	-1.02	-0.64
0.25	U	-3.56	-5.98	-2.68	-1.16	- .88	- .49
	L	-1.10	-2.78	-2.10	- .92	- .61	---
0.5	U	-2.60	-4.10	-2.74	-1.16	- .90	- .47
	L	- .51	-1.71	-1.19	- .60	- .33	- .06
1.0	U	-1.88	---	-2.46	-1.14	- .88	- .47
	L	- .04	---	- .42	- .10	- .02	.08
1.5	U	-1.58	-2.36	---	-1.14	- .89	- .47
	L	---	- .28	- .13	.02	.09	---
2.5	U	-1.25	-1.87	-2.16	-1.16	- .88	- .47
	L	.21	---	.12	.16	.20	.20
3.5	U	-1.04	-1.69	-2.22	-1.17	- .83	- .47
	L	.24	.03	.19	.19	.24	---
5.0	U	- .86	-1.60	-2.34	-1.19	- .80	- .49
	L	---	.23	.23	.25	.29	---
7.5	U	- .68	-1.30	-2.30	-1.22	- .81	- .49
	L	.14	.25	---	---	.27	.23
10.0	U	- .60	-1.01	-2.12	-1.27	- .82	- .49
	L	.24	---	.27	.26	---	---
12.5	U	---	---	---	---	---	---
15.0	U	- .51	- .77	-1.15	- .76	- .84	- .49
17.5	U	- .48	- .75	- .88	---	- .84	---
20.0	U	- .43	- .68	---	-1.46	- .85	---
	L	.10	.21	---	.21	.18	.14
30.0	U	- .38	- .62	- .66	-1.25	- .98	- .58
	L	.17	.18	.21	.16	.15	---
40.0	U	- .37	- .58	- .60	- .68	-1.01	- .69
	L	.14	.18	.21	.13	.12	.06
50.0	U	- .37	---	- .60	- .33	- .85	- .74
	L	---	.19	.20	.10	.10	.04
60.0	U	- .36	- .56	- .42	- .15	- .19	- .28
	L	.16	.22	.20	.08	.09	.04
70.0	U	---	- .69	- .60	- .26	---	- .64
	L	---	.22	.19	.04	.09	.03
73.0	U	---	---	---	- .26	- .10	- .61
80.0	U	---	- .84	---	- .16	- .01	---
	L	---	0	- .12	.06	.10	.02
85.0	U	---			- .13	- .02	---
	L	---			.04	.05	---
90.0	U	---			- .10	.01	- .18
	L	---			.04	.06	.04
95.0	U	---			---	.02	- .08
	L	---			.04	.06	.04

WING $\alpha = 9.2$

Orifice Location Percent Chord		STATIONS I	A	B	C	D	E
0		-4.07	-5.82	-1.97	-1.01	-0.78	-0.43
0.25	U	-4.29	-4.28	-1.64	- .96	- .68	- .39
	L	-1.53	-2.77	-1.50	- .82	- .50	---
0.5	U	-3.04	-3.30	-1.79	- .96	- .69	- .38
	L	- .78	-1.77	- .88	- .55	- .26	- .04
1.0	U	-2.20	---	-1.64	- .95	- .75	- .38
	L	- .19	---	- .30	- .08	0	.10
1.5	U	-1.82	-2.61	---	- .95	- .75	- .38
	L	---	- .31	- .06	.02	.11	---
2.5	U	-1.43	-2.49	-1.54	- .96	- .70	- .38
	L	.17	---	.14	.16	.21	.19
3.5	U	-1.18	-2.40	-1.60	- .97	- .67	- .38
	L	.22	.02	.20	.18	.24	---
5.0	U	- .98	-2.33	-1.68	- .99	- .65	- .39
	L	---	.24	.24	.25	.29	---
7.5	U	- .78	-1.98	-1.76	-1.03	- .66	- .39
	L	.16	.28	---	---	.28	.22
10.0	U	- .68	-1.45	-1.94	-1.06	- .66	- .40
	L	.24	---	.28	.26	---	---
12.5	U				---	---	---
15.0	U	- .56	- .84	-1.96	- .63	- .70	- .40
17.5	U	- .52	- .74	-1.81	---	- .70	---
20.0	U	- .47	- .70	---	-1.25	- .71	---
	L	.12	.25	---	.22	.19	.14
30.0	U	- .40	- .64	- .68	-1.34	- .81	- .44
	L	.20	.22	.22	.18	.16	---
40.0	U	- .40	- .61	- .45	-1.18	- .92	- .50
	L	.18	.22	.21	.14	.13	.04
50.0	U	- .40	---	- .51	- .81	- .94	- .57
	L	---	.23	.21	.12	.10	.02
60.0	U	- .38	- .56	- .31	- .16	- .24	- .33
	L	.18	.25	.21	.09	.09	.02
70.0	U	---	- .68	- .56	- .20	---	- .62
	L	---	.25	.20	.04	.09	- .01
73.0	U	---	---	---	- .20	- .46	- .70
80.0	U	---	- .81	---	- .10	- .21	---
	L	---	.04	- .11	.07	.09	- .04
85.0	U	---			- .06	- .22	---
	L	---			.04	.05	---
90.0	U	---			- .05	- .05	- .50
	L	---			.04	.06	- .08
95.0	U	---			---	.02	- .45
	L	---			.04	.07	- .14

FORE FLAP

Orifice Location Percent Chord		STATIONS A	B
0		-1.44	-1.04
1.0	U	-2.93	-1.81
	L	.28	.32
2.0	U	-2.70	-1.60
	L	.40	.12
3.0	U	-2.38	-1.29
	L	.36	.14
4.0	U	-1.72	-1.01
	L	.30	---
5.0	U	-1.32	- .92
	L	.22	0
6.0	U	---	---
	L	.03	- .08

MAIN FLAP

Orifice Location Percent Chord		STATIONS A	B
75.0		-0.30	0.09
75.25	U	---	---
	L	---	- .20
75.5	U	- .61	.07
	L	.12	- .07
76.0	U	- .80	- .96
	L	.32	.14
77.5	U	-1.28	- .79
	L	.41	.30
80.0	U	- .90	---
	L	.40	.32
82.5	U	- .67	---
	L	.38	.37
85.0	U	- .55	- .35
	L	.36	.33
90.0	U	- .38	- .24
	L	.30	.26
95.0	U	- .33	- .10
	L	.20	---

FORE FLAP

Orifice Location Percent Chord		STATIONS A	B
0		-1.36	-0.93
1.0	U	-2.78	-1.67
	L	.30	.23
2.0	U	-2.54	-1.48
	L	.44	.11
3.0	U	-2.24	-1.19
	L	.40	.10
4.0	U	-1.60	- .94
	L	.35	---
5.0	U	-1.22	- .85
	L	.26	- .03
6.0	U	---	---
	L	.08	- .10

MAIN FLAP

Orifice Location Percent Chord		STATIONS A	B
75.0		-0.25	0.09
75.25	U	---	---
	L	---	- .21
75.5	U	- .54	.08
	L	.16	- .08
76.0	U	- .70	- .86
	L	.36	.13
77.5	U	-1.18	- .68
	L	.46	.28
80.0	U	- .82	---
	L	---	.30
82.5	U	- .60	---
	L	.44	.36
85.0	U	- .48	- .30
	L	.42	.32
90.0	U	- .32	- .20
	L	.36	.26
95.0	U	- .26	- .07
	L	.28	---

NACA

TABLE V.- CONTINUED

WING $\alpha = 10.2$

Orifice Location Percent Chord		STATIONS I	A	B	C	D	E
0		-4.84	-3.12	-1.53	-0.88	-0.62	-0.37
0.25	U	-5.02	-2.34	-1.33	- .82	- .54	- .34
	L	-1.92	-2.10	-1.34	- .76	- .43	- .02
0.5	U	-3.48	-2.26	-1.46	- .81	- .56	- .32
	L	-1.04	-1.42	- .80	- .54	- .23	- .03
1.0	U	-2.47	---	-1.34	- .81	- .60	- .33
	L	- .30	---	- .27	- .08	.01	.09
1.5	U	-2.02	-2.18	---	- .81	- .59	- .33
	L	---	- .23	- .05	.02	.11	---
2.5	U	-1.58	-2.25	-1.29	- .82	- .56	- .32
	L	.14	---	.14	.16	.20	.19
3.5	U	-1.29	-2.20	-1.36	- .83	- .55	- .32
	L	.21	.04	.21	.19	.24	---
5.0	U	-1.09	-2.16	-1.41	- .85	- .54	- .34
	L	---	.26	.24	.25	.28	---
7.5	U	- .90	-2.16	-1.46	- .88	- .56	- .35
	L	.15	.30	---	---	.26	.22
10.0	U	- .76	-2.28	-1.55	- .92	- .56	- .35
	L	.26	---	.30	.26	---	---
12.5	U	---	---	---	---	---	---
15.0	U	- .62	-1.74	-1.72	- .52	- .59	---
17.5	U	- .56	- .94	-1.82	---	- .59	---
20.0	U	- .50	- .76	---	-1.05	- .60	---
	L	.10	.28	---	.23	.18	.13
30.0	U	- .45	- .56	-1.58	-1.24	- .67	- .40
	L	.21	.25	.25	.18	.15	---
40.0	U	- .45	- .58	- .36	-1.27	- .76	- .44
	L	.18	.25	.24	.15	.12	.04
50.0	U	- .44	---	- .36	-1.14	- .82	- .49
	L	---	.26	.24	.12	.08	.02
60.0	U	- .41	- .57	- .21	- .17	- .27	- .34
	L	.18	.27	.24	.10	.07	0
70.0	U	---	- .68	- .52	- .38	---	- .56
	L	---	.27	.24	.05	.07	- .04
73.0	U	---	---	---	- .30	- .71	- .62
80.0	U	---	- .81	---	- .16	- .53	---
	L	---	.06	- .08	.08	.06	- .09
85.0	U	---			- .06	- .45	---
	L	---			.04	.01	---
90.0	U	---			- .02	- .34	- .56
	L	---			.04	.01	- .26
95.0	U	---			---	- .23	- .68
	L	---			.04	0	- .24

WING $\alpha = 11.3$

Orifice Location Percent Chord		STATIONS I	A	B	C	D	E
0		-5.78	-2.28	-1.37	-0.82	-0.67	-0.37
0.25	U	-5.88	-1.81	-1.22	- .75	- .52	- .34
	L	-2.42	-1.84	-1.32	- .75	- .44	---
0.5	U	-3.97	-1.78	-1.34	- .75	- .52	- .32
	L	-1.35	-1.29	- .81	- .53	- .24	- .06
1.0	U	-2.75	---	-1.23	- .75	- .55	- .34
	L	- .45	---	- .30	- .10	- .01	.08
1.5	U	-2.20	-1.74	---	- .75	- .55	- .34
	L	---	- .22	- .07	.01	.09	---
2.5	U	-1.71	-1.79	-1.21	- .76	- .52	- .34
	L	.10	---	.13	.14	.18	.18
3.5	U	-1.45	-1.79	-1.28	- .76	- .52	- .32
	L	.19	.04	.21	.18	.22	---
5.0	U	-1.29	-1.84	-1.31	- .78	- .52	- .34
	L	---	.25	.25	.24	.28	---
7.5	U	-1.08	-1.92	-1.35	- .82	- .54	- .34
	L	.16	.30	---	---	.26	.22
10.0	U	- .84	-2.12	-1.43	- .84	- .54	- .36
	L	.28	---	.30	.26	---	---
12.5	U	---	---	---	---	---	---
15.0	U	- .66	-2.47	-1.51	- .46	- .56	- .34
17.5	U	- .60	-1.55	-1.61	---	- .56	---
20.0	U	- .54	-1.45	---	- .92	- .57	---
	L	.12	.28	---	.23	.18	.13
30.0	U	- .50	- .45	-1.93	-1.05	- .62	- .40
	L	.24	.27	.28	.19	.15	---
40.0	U	- .48	- .53	- .90	-1.14	- .67	- .43
	L	.22	.26	.26	.16	.11	.04
50.0	U	- .46	---	- .36	-1.14	- .72	- .46
	L	---	.26	.26	.12	.07	.02
60.0	U	- .44	- .56	- .18	- .22	- .31	- .34
	L	.20	.27	.26	.11	.05	0
70.0	U	---	- .69	- .46	- .77	---	- .51
	L	---	.27	.26	.05	.04	- .05
73.0	U	---	---	---	- .68	- .70	- .54
80.0	U	---	- .81	---	- .49	- .61	---
	L	---	.06	- .06	.08	.01	- .10
85.0	U	---			- .28	- .62	---
	L	---			.04	- .07	---
90.0	U	---			- .15	- .58	- .56
	L	---			.04	- .08	- .16
95.0	U	---			---	- .56	- .64
	L	---			.04	- .14	- .23

FORE FLAP

Orifice Location Percent Chord		STATIONS A	B
0		-1.35	-1.00
1.0	U	-2.82	-1.76
	L	.33	.33
2.0	U	-2.58	-1.56
	L	.46	.15
3.0	U	-2.27	-1.24
	L	.42	.16
4.0	U	-1.63	- .97
	L	.36	---
5.0	U	-1.24	- .88
	L	.27	.02
6.0	U	---	---
	L	.10	- .05

MAIN FLAP

Orifice Location Percent Chord		STATIONS A	B
75.0		-0.24	0.10
75.25	U	---	---
	L	---	- .20
75.5	U	- .54	.10
	L	.18	- .06
76.0	U	- .71	- .89
	L	.38	.15
77.5	U	-1.21	- .71
	L	.48	.32
80.0	U	- .85	---
	L	.46	.34
82.5	U	- .62	---
	L	.45	.39
85.0	U	- .51	- .30
	L	.43	.36
90.0	U	- .33	- .18
	L	.38	.29
95.0	U	- .27	- .05
	L	.28	---

FORE FLAP

Orifice Location Percent Chord		STATIONS A	B
0		-1.30	-0.96
1.0	U	-2.71	-1.76
	L	.33	.33
2.0	U	-2.48	-1.56
	L	.45	.16
3.0	U	-2.18	-1.26
	L	.42	.17
4.0	U	-1.58	- .96
	L	.36	---
5.0	U	-1.22	- .87
	L	.28	.03
6.0	U	---	---
	L	.10	- .04

MAIN FLAP

Orifice Location Percent Chord		STATIONS A	B
75.0		-0.23	0.12
75.25	U	---	---
	L	---	- .18
75.5	U	- .52	.11
	L	.18	- .06
76.0	U	- .70	- .88
	L	.38	.16
77.5	U	-1.20	- .68
	L	.48	.33
80.0	U	- .84	---
	L	.47	.35
82.5	U	- .63	---
	L	.45	.40
85.0	U	- .51	- .28
	L	.43	.36
90.0	U	- .33	- .17
	L	.38	.31
95.0	U	- .27	- .04
	L	.28	---

NACA

TABLE V.- CONTINUED

WING α = 12.3

Orifice Location Percent Chord		STATIONS I	A	B	C	D	E
0		-6.90	-2.00	-1.30	-0.78	-0.54	-0.38
0.25	U	-6.88	-1.64	-1.19	- .72	- .49	- .36
	L	-3.08	-1.77	-1.34	- .76	- .44	---
0.5	U	-4.47	-1.60	-1.30	- .72	- .50	- .34
	L	-1.78	-1.25	- .84	- .56	- .26	- .10
1.0	U	-3.00	---	-1.20	- .72	- .52	- .35
	L	- .70	---	- .32	- .13	- .02	.04
1.5	U	-2.41	-1.57	---	- .72	- .52	- .35
	L	---	- .23	- .09	- .03	.08	---
2.5	U	-1.98	-1.61	-1.18	- .73	- .51	- .35
	L	.02	---	.12	.12	.18	.17
3.5	U	-1.90	-1.64	-1.23	- .74	- .51	- .35
	L	.16	.04	.18	.16	.22	---
5.0	U	-1.90	-1.69	-1.26	- .76	- .50	- .36
	L	---	.26	.23	.22	.28	---
7.5	U	-1.39	-1.76	-1.29	- .79	- .52	- .36
	L	.17	.32	---	---	.26	.22
10.0	U	- .94	-1.86	-1.36	- .82	- .52	- .36
	L	.31	---	.30	.24	---	---
12.5	U	---	---	---	---	---	---
15.0	U	- .76	-2.40	-1.38	- .46	- .54	- .36
17.5	U	- .70	-2.12	-1.43	---	- .54	- .18
20.0	U	- .61	-2.51	---	- .88	- .55	---
	L	.14	.30	---	.22	.19	.14
30.0	U	- .56	- .58	-1.99	- .95	- .58	- .42
	L	.28	.28	.26	.18	.18	---
40.0	U	- .53	- .41	-1.62	-1.02	- .61	- .44
	L	.24	.28	.25	.15	.12	.04
50.0	U	- .49	---	- .77	-1.06	- .63	- .45
	L	---	.28	.24	.12	.08	.02
60.0	U	- .45	- .52	- .26	- .27	- .32	- .34
	L	.23	.30	.24	.08	.05	0
70.0	U	---	- .68	- .40	- .97	---	- .46
	L	---	.30	.24	.04	.02	- .04
73.0	U	---	---	---	- .98	- .68	- .48
80.0	U	---	- .80	---	- .77	- .62	---
	L	---	.08	- .08	.05	- .01	- .08
85.0	U	---			- .60	- .64	---
	L	---			.03	- .10	---
90.0	U	---			- .45	- .66	- .48
	L	---			.03	- .14	- .13
95.0	U	---			---	- .77	- .50
	L	---			.03	- .24	- .18

WING α = 16.3

Orifice Location Percent Chord		STATIONS I	A	B	C	D	E
0		-4.45	-1.91	-1.10	-0.72	-0.53	-0.40
0.25	U	-3.38	-1.64	-1.04	- .66	- .50	- .38
	L	-3.38	-2.09	-1.34	- .85	- .56	---
0.5	U	-3.25	-1.60	-1.08	- .66	- .50	- .36
	L	-2.17	-1.64	- .94	- .67	- .38	- .21
1.0	U	-3.22	---	-1.06	- .66	- .51	- .37
	L	-1.00	---	- .44	- .22	- .12	- .04
1.5	U	-3.23	-1.56	---	- .66	- .51	- .37
	L	---	- .44	- .18	- .10	.01	---
2.5	U	-3.33	-1.59	---	- .68	- .51	- .37
	L	- .08	---	.05	.07	.14	.15
3.5	U	-3.48	-1.60	-1.10	- .70	- .52	- .36
	L	.13	- .09	.14	.14	.20	---
5.0	U	-3.84	-1.63	-1.12	- .71	- .52	- .38
	L	---	.22	.18	.21	.24	---
7.5	U	-3.98	-1.68	-1.13	- .74	- .54	- .38
	L	.19	.30	---	---	.26	.22
10.0	U	-3.02	-1.74	-1.18	- .76	- .54	- .40
	L	.36	---	.31	.27	---	---
12.5	U	---	---	---	---	---	---
15.0	U	-1.06	-1.78	-1.18	- .43	- .56	- .39
17.5	U	- .77	-1.68	-1.22	---	- .56	---
20.0	U	- .67	-2.16	---	- .81	- .57	---
	L	.18	.34	---	.26	.22	.16
30.0	U	- .58	-2.45	-1.43	- .83	- .61	- .44
	L	.34	.32	.30	.22	.18	---
40.0	U	- .56	- .94	-1.50	- .86	- .62	- .44
	L	.31	.32	.30	.18	.15	.08
50.0	U	- .56	---	-1.44	- .91	- .63	- .44
	L	---	.32	.28	.15	.10	.04
60.0	U	- .53	- .46	-1.15	- .31	- .38	- .38
	L	.28	.32	.28	.14	.08	.03
70.0	U	---	- .66	- .98	- .98	---	- .48
	L	---	.32	.26	.08	.04	- .02
73.0	U	---	---	---	-1.04	- .70	- .48
80.0	U	---	- .78	---	- .89	- .70	---
	L	---	.10	- .04	.08	0	- .07
85.0	U	---			- .85	- .82	---
	L	---			.05	- .09	---
90.0	U	---			- .85	-1.06	- .56
	L	---			.05	- .14	- .12
95.0	U	---			---	-1.46	- .56
	L	---			.05	- .24	- .18

FORE FLAP

Orifice Location Percent Chord		STATIONS A	B
0		-1.29	-0.96
1.0	U	-2.68	-1.80
	L	.36	.34
2.0	U	-2.44	-1.63
	L	.48	.16
3.0	U	-2.15	-1.34
	L	.44	.16
4.0	U	-1.55	-1.01
	L	.39	---
5.0	U	-1.20	- .90
	L	.30	.02
6.0	U	---	---
	L	.12	- .06

MAIN FLAP

Orifice Location Percent Chord		STATIONS A	B
75.0		-0.21	0.10
75.25	U	---	---
	L	---	- .20
75.5	U	- .50	.10
	L	.20	- .06
76.0	U	- .67	- .91
	L	.40	.14
77.5	U	-1.18	- .73
	L	.50	.32
80.0	U	- .86	---
	L	.50	.34
82.5	U	- .63	---
	L	.48	.40
85.0	U	- .51	- .30
	L	.45	.36
90.0	U	- .33	- .18
	L	.40	.30
95.0	U	- .26	- .05
	L	.31	---

FORE FLAP

Orifice Location Percent Chord		STATIONS A	B
0	-	-1.34	-0.80
1.0	U	-2.84	-1.34
	L	.36	.26
2.0	U	-2.62	-1.29
	L	.48	.16
3.0	U	-2.30	-1.19
	L	.44	.16
4.0	U	-1.64	- .95
	L	.39	.16
5.0	U	-1.25	- .78
	L	.30	.04
6.0	U	---	---
	L	.10	- .04

MAIN FLAP

Orifice Location Percent Chord		STATIONS A	B
75.0		-0.24	0.11
75.25	U	---	---
	L	---	- .17
75.5	U	- .53	.12
	L	.19	- .05
76.0	U	- .70	- .84
	L	.38	.15
77.5	U	-1.21	- .74
	L	.50	.33
80.0	U	- .88	---
	L	.50	.35
82.5	U	- .65	---
	L	.48	.41
85.0	U	- .53	- .30
	L	.46	.37
90.0	U	- .32	- .17
	L	.42	.32
95.0	U	- .25	- .04
	L	.32	---

TABLE V.- CONCLUDED

WING α = 22.2

Orifice Location Percent Chord		STATIONS I	A	B	C	D	E
0		-4.98	-1.52	-0.95	-0.65	-0.48	-0.40
0.25	U	-4.14	-1.38	- .88	- .62	- .46	- .38
	L	-4.95	-1.99	-1.28	- .88	- .57	---
0.5	U	-4.11	-1.25	- .90	- .62	- .46	- .36
	L	-3.45	-1.73	-1.01	- .75	- .42	- .28
1.0	U	-4.14	---	- .90	- .62	- .46	- .38
	L	-1.83	---	- .52	- .28	- .17	- .10
1.5	U	-4.20	-1.32	---	- .62	- .46	- .38
	L	---	- .56	- .27	- .16	- .04	---
2.5	U	-4.32	-1.36	- .93	- .63	- .46	- .38
	L	- .42	---	- .02	.02	.12	.13
3.5	U	-4.29	-1.39	- .98	- .64	- .46	- .36
	L	- .08	- .19	.09	.10	.19	---
5.0	U	-4.17	-1.44	-1.00	- .66	- .47	- .38
	L	---	.16	.13	.18	.23	---
7.5	U	-3.97	-1.47	-1.01	- .68	- .48	- .38
	L	.22	.32	---	---	.28	.24
10.0	U	-4.04	-1.50	-1.07	- .70	- .48	- .40
	L	.41	---	.31	.27	---	---
12.5	U	---	---	---	---	---	---
15.0	U	-4.04	-1.53	-1.09	- .39	- .51	- .37
17.5	U	-3.30	-1.43	-1.10	---	- .51	---
20.0	U	-3.08	-1.70	---	- .75	- .52	---
	L	.22	.40	---	.28	.25	.20
30.0	U	- .65	-1.96	-1.19	- .76	- .54	- .42
	L	.44	.39	.33	.24	.21	---
40.0	U	- .65	-1.82	-1.22	- .76	- .56	- .44
	L	.41	.38	.32	.20	.16	.10
50.0	U	- .68	---	-1.23	- .80	- .59	- .46
	L	---	.38	.30	.16	.11	.06
60.0	U	- .63	- .92	-1.16	- .36	- .44	- .45
	L	.35	.38	.29	.13	.08	.04
70.0	U	---	- .80	-1.22	- .98	---	- .60
	L	---	.36	.26	.06	.04	- .02
73.0	U	---	---	---	-1.02	- .74	- .64
80.0	U	---	- .78	---	- .95	- .84	---
	L	---	.16	- .09	.03	- .04	- .10
85.0	U	---			- .92	-1.05	---
	L	---			.06	- .15	---
90.0	U	---			- .96	-1.34	- .86
	L	---			.06	- .20	- .17
95.0	U	---			---	-1.52	- .82
	L	---			.06	- .32	- .25

WING α = 27.8

Orifice Location Percent Chord		STATIONS I	A	B	C	D	E
0		-3.08	-1.38	-0.90	-0.64	-0.50	-0.40
0.25	U	-2.86	-1.30	- .86	- .61	- .46	- .39
	L	-3.98	-1.90	-1.27	- .91	- .52	---
0.5	U	-2.86	-1.26	- .86	- .61	- .46	- .37
	L	-3.05	-1.78	-1.05	- .82	- .49	- .34
1.0	U	-2.94	---	- .86	- .61	- .46	- .38
	L	-1.77	---	- .59	- .35	- .22	- .14
1.5	U	-3.01	-1.24	---	- .61	- .46	- .38
	L	---	- .66	- .34	- .22	- .07	---
2.5	U	-3.10	-1.29	- .88	- .62	- .46	- .38
	L	- .48	---	- .06	- .02	.10	.12
3.5	U	-3.18	-1.32	- .92	- .62	- .46	- .37
	L	- .12	- .27	.04	.06	.18	---
5.0	U	-3.23	-1.34	- .93	- .63	- .46	- .39
	L	.01	.12	.08	.16	.23	---
7.5	U	-3.44	-1.37	- .95	- .64	- .48	- .39
	L	.22	.31	---	---	.30	.26
10.0	U	-3.64	-1.42	- .98	- .65	- .48	- .40
	L	.43	---	.31	.26	---	---
12.5	U	---	---	---	---	---	---
15.0	U	-3.50	-1.45	- .99	- .36	- .49	- .38
17.5	U	-3.22	-1.19	-1.02	---	- .49	---
20.0	U	-3.00	-1.52	---	- .68	- .49	---
	L	.24	.42	---	.28	.28	.25
30.0	U	-1.76	-1.60	-1.06	- .70	- .52	- .43
	L	.50	.42	.34	.24	.24	---
40.0	U	-1.18	-1.58	-1.10	- .72	- .56	- .45
	L	.46	.42	.33	.20	.19	.15
50.0	U	- .96	----	-1.14	- .76	- .60	- .48
	L	---	.42	.30	.13	.12	.10
60.0	U	- .81	-1.22	-1.10	- .38	- .44	- .48
	L	.39	.42	.29	.08	.07	.08
70.0	U	---	-1.12	-1.20	- .74	---	- .63
	L	---	.39	.26	0	0	.01
73.0	U	---	---	---	- .96	.74	- .66
80.0	U	---	- .91	---	- .88	- .81	---
	L	---	.19	- .12	- .04	- .09	- .06
85.0	U	---			- .87	- .92	---
	L	---			.04	- .22	---
90.0	U	---			- .92	-1.10	- .84
	L	---			.04	- .28	- .16
95.0	U	---			---	-1.34	- .84
	L	---			.04	- .43	- .25

FORE FLAP

Orifice Location Percent Chord		STATIONS A	B
0		-1.23	-1.07
1.0	U	-2.68	-1.49
	L	.38	.26
2.0	U	-2.48	-1.20
	L	.52	.19
3.0	U	-2.24	-1.06
	L	.47	.16
4.0	U	-1.64	- .96
	L	.42	---
5.0	U	-1.30	- .88
	L	.34	.08
6.0	U	---	---
	L	.14	.02

MAIN FLAP

Orifice Location Percent Chord		STATIONS A	B
75.0		-0.22	0.10
75.25	U	---	---
	L	---	- .24
75.5	U	- .52	.12
	L	.21	- .12
76.0	U	- .71	- .88
	L	.42	.12
77.5	U	-1.26	- .84
	L	.52	.32
80.0	U	- .95	---
	L	.53	.35
82.5	U	- .73	---
	L	.51	.41
85.0	U	- .59	- .44
	L	.50	.36
90.0	U	- .38	- .32
	L	.46	.30
95.0	U	- .26	- .16
	L	.36	---

FORE FLAP

Orifice Location Percent Chord		STATIONS A	B
0		-1.15	-1.30
1.0	U	-2.47	-1.76
	L	.42	.34
2.0	U	-2.21	-1.44
	L	.53	.20
3.0	U	-1.96	-1.29
	L	.48	.20
4.0	U	-1.46	-1.17
	L	.44	---
5.0	U	-1.16	-1.09
	L	.35	.13
6.0	U	---	---
	L	.16	.02

MAIN FLAP

Orifice Location Percent Chord		STATIONS A	B
75.0		-0.20	0.10
75.25	U	---	---
	L	---	- .31
75.5	U	- .45	.10
	L	.20	- .16
76.0	U	- .65	-1.04
	L	.42	.08
77.5	U	-1.22	-1.06
	L	.52	.29
80.0	U	- .92	---
	L	.54	.33
82.5	U	- .73	---
	L	.54	.38
85.0	U	- .62	- .64
	L	.52	.34
90.0	U	- .46	- .53
	L	.48	.26
95.0	U	- .29	- .38
	L	.39	---

NACA

TABLE VI.- TABULATED PRESSURE COEFFICIENTS[1] FOR THE WING WITH ALL THE LEADING-EDGE SLATS DEFLECTED.

$R = 8.0 \times 10^6$

$\alpha = 0.0$

SLAT

Orifice Location Percent Chord		STATIONS I	A	B	C	D	E
0		-0.12	-0.14	-0.42	-0.28	-0.36	-0.22
0.25	U	.14	.18	.10	.14	.15	.13
	L	- .56	- .50	- .62	- .65	- .56	---
0.5	U	---	.18	.21	.20	.22	.21
	L	- .56	- .48	- .56	- .58	- .54	- .41
1.0	U	.14	---	.21	.21	.22	.20
	L	- .48	---	- .44	- .46	- .43	- .36
1.5	U	.12	.13	---	.18	.22	.15
	L	---	- .28	- .28	- .35	- .25	---
2.5	U	.08	.10	.15	.14	.16	.14
	L	- .42	- .27	- .22	- .24	- .22	- .10
3.5	U	.06	.08	.08	.11	.12	.14
	L	- .40	---	- .16	- .21	- .18	---
5.0	U	.03	.04	.06	.08	.10	.09
	L	- .48	- .04	- .10	- .11	- .10	- .01
7.5	U	.01	- .02	.04	.04	.03	.04
	L	- .58	- .04	- .12	- .15	- .08	- .02
10.0	U	- .02	- .04	- .02	- .02	.02	0
	L	- .30	- .04	0	- .18	- .08	- .04
15.0	U	- .04	- .08	- .06	- .12	- .02	- .04
	L	- .02	- .07	0	- .04	- .06	- .08
17.5	U	- .06	---	---	---	---	---
	L	- .04	---	---	---	---	---

$\alpha = 5.1$

SLAT

Orifice Location Percent Chord		STATIONS I	A	B	C	D	E
0		0.04	-0.01	0.13	0.02	0.05	0.09
0.25	U	- .20	- .30	- .05	- .24	- .23	- .22
	L	.14	.16	.19	.20	.22	---
0.5	U	---	- .34	- .21	- .32	- .32	- .27
	L	.10	.14	.17	.14	.20	.21
1.0	U	- .26	---	- .25	- .32	- .30	- .32
	L	.06	---	.12	.14	.15	.18
1.5	U	- .26	- .32	---	- .30	- .27	- .30
	L	---	.10	.10	.09	.14	---
2.5	U	- .26	- .27	- .23	- .28	- .25	- .26
	L	- .04	.09	.05	.08	.10	.12
3.5	U	- .25	- .26	- .23	- .25	- .24	- .21
	L	- .07	---	.03	.04	.08	---
5.0	U	- .24	- .24	- .22	- .24	- .22	- .22
	L	- .17	.09	- .04	- .02	.04	.04
7.5	U	- .22	- .26	- .22	- .24	- .24	- .20
	L	- .25	.07	- .06	- .13	.05	.03
10.0	U	- .22	- .25	- .24	- .24	- .22	- .21
	L	- .08	.05	0	- .16	.06	.02
15.0	U	- .22	- .25	- .22	- .26	- .21	- .21
	L	.03	- .02	0	- .03	- .02	- .05
17.5	U	- .23	---	---	---	---	---
	L	- .16	---	---	---	---	---

WING

Orifice Location Percent Chord		STATIONS I	A	B	C	D	E
5.0	U	-0.28	-0.07	-0.16	-0.23	-0.07	-0.08
6.0	U	- .25	- .07	- .16	- .24	- .07	- .08
	L	- .38	- .08	- .18	- .22	- .08	- .05
7.5	U	- .18	- .10	- .18	- .27	- .08	- .09
	L	- .14	- .09	---	- .14	- .08	- .05
10.0	U	- .04	---	- .15	.08	- .13	- .12
	L	- .02	---	- .05	.02	---	---
12.5	U	0	- .16	- .02	- .04	- .09	- .03
15.0	U	- .06	- .12	- .16	- .09	- .16	- .12
17.5	U	- .12	- .26	- .22	- .22	- .16	- .38
20.0	U	- .20	- .18	---	- .14	- .10	---
	L	---	- .08	---	0	- .06	.04
30.0	U	- .14	- .16	- .15	- .12	- .13	- .08
	L	- .09	- .12	- .06	- .06	- .04	---
40.0	U	- .16	- .16	- .12	- .10	- .10	- .08
	L	- .14	- .12	- .08	- .06	- .05	- .04
50.0	U	- .16	---	- .12	- .10	- .08	- .06
	L	- .15	- .11	- .07	- .06	- .06	- .04
60.0	U	- .15	- .14	- .06	---	- .06	- .02
	L	- .15	- .11	- .06	- .03	- .04	- .01
70.0	U	---	- .18	- .05	- .08	---	- .01
	L	---	- .12	- .02	.08	- .01	- .04
73.0	U	---	---	---	- .08	- .04	0
80.0	U	---	- .13	- .04	- .04	0	---
	L	---	- .10	- .01	.03	.02	0
85.0	U	---	- .09	.01	0	0	- .04
	L	---	- .10	- .01	- .03	- .02	.02
90.0	U	---	- .09	.01	- .05	.02	.03
	L	---	- .08	.01	- .03	0	.04
95.0	U	---	- .09	.02	- .05	.02	.04
	L	---	- .08	---	- .03	.02	.05

WING

Orifice Location Percent Chord		STATIONS I	A	B	C	D	E
5.0	U	-0.10	-0.40	-0.55	-0.56	-0.26	-0.24
6.0	U	- .08	- .16	- .38	- .18	- .18	- .28
	L	.20	.34	.28	.22	.24	.36
7.5	U	- .24	- .35	- .32	- .32	- .28	- .36
	L	.26	.30	---	.24	.27	.30
10.0	U	- .28	---	- .38	- .38	- .31	- .36
	L	.26	---	.20	.20	---	---
12.5	U	- .30	- .40	- .36	- .38	- .33	- .28
15.0	U	- .27	- .35	- .44	- .35	- .41	- .36
17.5	U	- .30	- .54	- .50	- .54	- .42	- .86
20.0	U	- .35	- .38	---	- .35	- .34	---
	L	---	.03	---	.10	.10	.12
30.0	U	- .26	- .30	- .29	- .26	- .25	- .21
	L	.02	- .04	.03	.04	.05	---
40.0	U	- .23	- .26	- .22	- .21	- .18	- .17
	L	- .02	- .05	.01	.02	.02	0
50.0	U	- .22	---	- .19	- .16	- .14	- .13
	L	- .04	- .05	0	- .01	.01	0
60.0	U	- .19	- .20	- .12	---	- .05	- .04
	L	- .05	- .06	- .01	0	.02	.01
70.0	U	---	- .21	- .06	- .10	---	- .04
	L	---	- .06	.01	0	.04	- .02
73.0	U	---	---	---	- .10	- .05	- .03
80.0	U	---	- .16	- .06	- .06	.01	- .04
	L	---	- .06	.02	.06	- .04	0
85.0	U	---	- .12	- .02	- .03	0	0
	L	---	- .06	- .01	- .03	.02	.02
90.0	U	---	- .12	- .02	- .06	.02	.02
	L	---	- .06	.01	- .03	.03	.03
95.0	U	---	- .10	.01	- .06	.04	.03
	L	---	- .06	---	- .03	.04	.04

[1]Pressure coefficients tabulated are defined as $(p_l - p)/q$

TABLE VI.- CONTINUED

SLAT $\alpha = 8.1$

Orifice Location Percent Chord		STATIONS I	A	B	C	D	E
0		-0.64	-1.06	-1.21	-1.28	-1.37	-1.06
0.25	U	-1.04	-1.37	-1.14	-1.62	-1.59	-1.41
	L	.08	0	-.02	-.04	-.10	---
0.5	U	---	-1.23	-1.21	-1.46	-1.45	-1.25
	L	.15	.13	.15	.08	.09	.14
1.0	U	-.78	---	-1.00	-1.18	-1.06	-1.16
	L	.18	---	.23	.22	.19	.24
1.5	U	-.68	-.86	---	-.90	-.84	-.89
	L	---	.22	.24	.21	.23	---
2.5	U	-.60	-.66	-.63	-.74	-.73	-.80
	L	.13	.22	.21	.21	.22	.22
3.5	U	-.54	-.58	-.61	-.64	-.64	-.54
	L	.08	---	.18	.15	.19	---
5.0	U	-.48	-.51	-.52	-.54	-.54	-.53
	L	-.02	.20	.06	.09	.14	.10
7.5	U	-.40	-.49	-.44	-.48	-.50	-.45
	L	-.06	.20	.06	-.01	.14	.14
10.0	U	-.38	-.44	-.43	-.46	-.44	-.43
	L	.09	---	0	.06	.17	.19
15.0	U	-.36	-.40	-.37	-.44	-.40	-.38
	L	.06	-.01	0	-.02	-.04	-.12
17.5	U	-.35	---	---	---	---	---
	L	-.24	---	---	---	---	---

SLAT $\alpha = 12.2$

Orifice Location Percent Chord		STATIONS I	A	B	C	D	E
0		-2.26	-3.86	-5.05	-4.95	-5.34	-4.34
0.25	U	-2.68	-3.78	-3.76	-4.88	-4.76	-4.22
	L	-.54	-1.04	-1.34	-1.38	-1.58	---
0.5	U	---	-2.81	-3.32	-3.92	-3.66	-3.25
	L	-.16	-.49	-.56	-.74	-.83	-.57
1.0	U	-1.59	---	-2.45	-2.67	-2.50	-2.65
	L	.12	---	0	-.06	-.18	-.12
1.5	U	-1.38	-1.85	---	-2.12	-2.03	-2.04
	L	---	.11	.16	.08	.09	0
2.5	U	-1.14	-1.36	-1.44	-1.61	-1.56	-1.62
	L	.21	.23	.26	.21	.18	.21
3.5	U	-.98	-1.16	-1.26	-1.32	-1.31	-1.19
	L	.21	---	.26	.21	.22	---
5.0	U	-.84	-.96	-1.06	-1.11	-1.12	-1.05
	L	.14	.28	.18	.20	.22	.14
7.5	U	-.68	-.83	-.86	-.92	-.98	-.86
	L	.12	.32	.20	.18	.24	.24
10.0	U	-.62	-.73	-.78	-.82	-.77	-.77
	L	.15	.34	0	.20	.29	.24
15.0	U	-.54	-.60	-.64	-.70	-.66	-.66
	L	.01	-.07	0	-.01	-.16	-.26
17.5	U	-.52	---	---	---	---	---
	L	-.36	---	---	---	---	---

WING

Orifice Location Percent Chord		STATIONS I	A	B	C	D	E
5.0	U	-0.22	-0.18	-0.56	-0.32	-0.14	-0.34
6.0	U	-.14	-.22	-.40	-.34	-.29	-.45
	L	.30	.38	.28	.24	.31	.36
7.5	U	-.38	-.56	-.56	-.53	-.49	-.56
	L	.33	.36	---	.24	.30	.30
10.0	U	-.43	---	-.57	-.58	-.52	-.53
	L	.30	---	.23	.22	---	---
12.5	U	-.44	-.57	-.52	-.54	-.51	-.42
15.0	U	-.38	-.48	-.57	-.50	-.58	-.48
17.5	U	-.40	-.72	-.68	-.79	-.55	-1.20
20.0	U	-.48	-.49	---	-.48	-.50	---
	L	---	.11	---	.16	.16	.16
30.0	U	-.32	-.36	-.36	-.34	-.34	-.28
	L	.09	.04	.10	.10	.09	---
40.0	U	-.28	-.32	-.27	-.26	-.25	-.22
	L	.03	.02	.07	.07	.06	.04
50.0	U	-.26	---	-.23	-.19	-.18	-.16
	L	.01	.01	.06	.04	.04	.02
60.0	U	-.23	-.22	-.14	---	-.06	-.05
	L	0	.01	.03	.05	.05	.04
70.0	U	---	-.21	-.06	-.12	---	-.05
	L	---	-.04	.05	.02	.06	0
73.0	U	---	---	---	-.10	-.08	-.04
80.0	U	---	-.16	-.06	-.04	-.02	---
	L	---	-.03	.04	.09	-.05	.02
85.0	U	---	-.10	0	-.02	-.02	0
	L	---	-.04	.04	-.02	.02	.04
90.0	U	---	-.09	0	-.06	.02	.02
	L	---	-.04	.01	-.02	.04	.04
95.0	U	---	-.08	.02	-.06	.03	.03
	L	---	-.05	---	-.02	.04	.05

WING

Orifice Location Percent Chord		STATIONS I	A	B	C	D	E
5.0	U	-0.38	-0.04	-0.56	-0.26	-0.16	-0.54
6.0	U	-.24	-.32	-.64	-.54	-.40	-.71
	L	.31	.42	.28	.25	.30	.32
7.5	U	-.56	-.80	-.86	-.84	-.73	-.86
	L	.38	.40	---	.26	.31	.29
10.0	U	-.62	---	-.85	-.85	-.76	-.79
	L	.36	---	.26	.26	---	---
12.5	U	-.59	-.76	-.76	-.77	-.73	-.64
15.0	U	-.50	-.66	-.78	-.70	-.82	-.68
17.5	U	-.62	-.94	-.94	-1.08	-.74	-1.57
20.0	U	-.60	-.64	---	-.64	-.66	---
	L	---	.17	---	.22	.21	.20
30.0	U	-.38	-.46	-.47	-.44	-.45	-.39
	L	.15	.12	.16	.16	.15	---
40.0	U	-.34	-.38	-.35	-.33	-.32	-.29
	L	.10	.09	.13	.14	.12	.08
50.0	U	-.31	---	-.28	-.24	-.24	-.21
	L	.08	.06	.10	.10	.08	.06
60.0	U	-.27	-.24	-.17	---	-.08	-.07
	L	.05	.06	.08	.10	.08	.07
70.0	U	---	-.22	-.06	-.13	---	-.07
	L	---	0	.08	.05	.08	.02
73.0	U	---	---	---	-.11	-.08	-.06
80.0	U	---	-.16	-.08	-.05	-.04	---
	L	---	.01	.06	.11	-.06	.04
85.0	U	---	-.10	0	0	-.03	-.02
	L	---	0	.06	-.01	.04	.04
90.0	U	---	-.08	.01	-.06	0	0
	L	---	0	.05	-.01	.05	.04
95.0	U	---	-.07	.02	-.06	.02	.01
	L	---	-.02	---	-.01	.05	.04

NACA

TABLE VI.- CONTINUED

$\alpha = 13.2$

SLAT

Orifice Location Percent Chord		STATIONS I	A	B	C	D	E
0		-2.90	-4.84	-6.47	-6.22	-6.64	-5.30
0.25	U	-3.27	-4.65	-4.57	-5.99	-5.54	-4.95
	L	- .82	-1.46	-1.92	-1.92	-2.10	---
0.5	U	---	-3.33	-3.96	-4.48	-4.31	-3.76
	L	- .34	- .76	- .90	-1.10	-1.17	- .82
1.0	U	-1.88	---	-2.90	-3.16	-2.87	-3.02
	L	.05	---	- .17	- .24	- .35	- .27
1.5	U	-1.62	-2.12	---	-2.48	-2.31	-2.28
	L	---	.02	.06	- .04	.01	---
2.5	U	-1.32	-1.56	-1.67	-1.86	-1.76	-1.77
	L	.21	.21	.22	.16	.16	.17
3.5	U	-1.14	-1.31	-1.45	-1.53	-1.53	-1.34
	L	.22	---	.25	.19	.22	---
5.0	U	- .96	-1.09	-1.20	-1.28	-1.36	-1.20
	L	.17	.30	.20	.21	.24	.14
7.5	U	- .78	- .93	- .98	-1.06	-1.10	- .99
	L	.16	.34	.22	.20	.26	.25
10.0	U	- .70	- .81	- .88	- .92	- .86	- .86
	L	.27	.36	0	.20	.30	.24
15.0	U	- .61	- .66	- .70	- .78	- .72	- .73
	L	.01	- .10	0	- .03	- .18	- .31
17.5	U	- .57	---	---	---	---	---
	L	- .41	---	---	---	---	---

WING

Orifice Location Percent Chord		STATIONS I	A	B	C	D	E
5.0	U	-0.48	-0.08	-0.66	-0.38	-0.20	-0.58
6.0	U	- .28	- .34	- .68	- .61	- .45	- .77
	L	.32	.42	.26	.23	.30	.30
7.5	U	- .64	- .87	- .94	- .92	- .80	- .94
	L	.39	.40	---	.25	.32	.28
10.0	U	- .67	---	- .92	- .92	- .80	- .84
	L	.38	---	.26	.25	---	---
12.5	U	- .64	- .80	- .81	- .84	- .77	- .68
15.0	U	- .54	- .68	- .84	- .76	- .86	- .72
17.5	U	- .55	- .98	- .99	-1.16	- .77	-1.60
20.0	U	- .63	- .67	---	- .70	- .70	---
	L	---	.19	---	.22	.22	.20
30.0	U	- .40	- .45	- .50	- .46	- .46	- .41
	L	.18	.14	.18	.17	.16	---
40.0	U	- .36	- .39	- .36	- .36	- .32	- .30
	L	.13	.12	.14	.13	.14	.08
50.0	U	- .32	---	- .30	- .25	- .24	- .21
	L	.10	.10	.12	.10	.10	.08
60.0	U	- .28	- .25	- .17	---	- .08	- .08
	L	.08	.08	.09	.10	.10	.07
70.0	U	---	- .22	- .06	- .14	---	- .08
	L	---	.02	.09	.04	.10	.02
73.0	U	---	---	---	- .12	- .08	- .07
80.0	U	---	- .16	- .09	- .06	- .05	- .04
	L	---	.03	.06	.10	- .06	.04
85.0	U	---	- .09	- .02	- .02	- .03	- .04
	L	---	.01	.06	- .02	.04	.04
90.0	U	---	- .08	- .01	- .07	- .01	- .03
	L	---	.01	.05	- .02	.05	.04
95.0	U	---	- .06	0	- .07	.02	- .01
	L	---	- .01	---	- .02	.05	.04

$\alpha = 14.2$

SLAT

Orifice Location Percent Chord		STATIONS I	A	B	C	D	E
0		-3.46	-6.01	-7.89	-7.48	-5.70	-2.50
0.25	U	-3.80	-5.68	-5.46	-7.06	-4.40	-2.26
	L	-1.09	-1.96	-2.52	-2.50	-2.16	---
0.5	U	---	-3.98	-4.65	-5.16	-3.66	-2.05
	L	- .49	-1.11	-1.26	-1.49	-1.26	- .56
1.0	U	-2.12	---	-3.35	-3.61	-2.75	-2.01
	L	- .03	---	- .34	- .40	- .40	- .12
1.5	U	-1.80	-2.45	---	-2.78	-2.44	-2.03
	L	---	- .08	- .04	- .15	- .02	---
2.5	U	-1.48	-1.78	-1.88	-2.08	-2.24	-2.00
	L	.20	.16	.18	.10	.15	.22
3.5	U	-1.26	-1.50	-1.62	-1.73	-2.12	-2.04
	L	.22	---	.24	.16	.24	---
5.0	U	-1.06	-1.26	-1.36	-1.48	-1.88	-2.07
	L	.20	.30	.22	.23	.28	.17
7.5	U	- .88	-1.05	-1.13	-1.24	-1.41	-1.46
	L	.20	.35	.22	.23	.30	.28
10.0	U	- .78	- .92	-1.00	-1.04	-1.10	-1.03
	L	.30	.38	0	.20	.35	.26
15.0	U	- .66	- .74	- .76	- .86	- .82	- .90
	L	- .03	- .13	0	- .03	- .22	- .39
17.5	U	- .63	---	---	---	---	---
	L	- .44	---	---	---	---	---

WING

Orifice Location Percent Chord		STATIONS I	A	B	C	D	E
5.0	U	-0.61	-0.17	-0.78	-0.52	-0.24	-0.72
6.0	U	- .32	- .38	- .74	- .68	- .50	- .94
	L	.34	.42	.24	.22	.32	.32
7.5	U	- .70	- .94	-1.02	-1.00	- .88	-1.12
	L	.43	.40	---	.25	.34	.31
10.0	U	- .71	---	- .98	- .98	- .82	- .90
	L	.40	---	.26	.26	---	---
12.5	U	- .66	- .87	- .86	- .89	- .78	- .67
15.0	U	- .54	- .74	- .88	- .80	- .87	- .68
17.5	U	- .54	-1.04	-1.04	-1.20	- .78	-1.26
20.0	U	- .42	- .71	---	- .74	- .70	---
	L	---	.20	---	.22	.26	.22
30.0	U	- .40	- .50	- .52	- .49	- .46	- .42
	L	.21	.15	.18	.17	.20	---
40.0	U	- .35	- .41	- .38	- .36	- .32	- .32
	L	.16	.13	.14	.14	.16	.11
50.0	U	- .32	---	- .31	- .26	- .22	- .24
	L	.14	.10	.13	.10	.13	.08
60.0	U	- .27	- .26	- .18	---	- .06	- .10
	L	.11	.08	.10	.10	.12	.09
70.0	U	---	- .22	- .06	- .15	---	- .10
	L	---	.02	.10	.05	.12	.04
73.0	U	---	---	---	- .12	- .06	- .09
80.0	U	---	- .16	- .08	- .07	- .03	- .06
	L	---	.02	.06	.10	- .04	.04
85.0	U	---	- .11	- .02	- .04	- .02	- .06
	L	---	.02	.06	- .02	.06	.04
90.0	U	---	- .10	- .02	- .08	- .01	- .05
	L	---	0	.04	- .02	.07	.04
95.0	U	---	- .08	0	- .08	.02	- .03
	L	---	- .02	---	- .02	.06	.03

NACA

TABLE VI.- CONTINUED

SLAT $\alpha = 15.2$

Orifice Location Percent Chord		STATIONS I	A	B	C	D	E
0		-4.13	-7.04	-7.58	-3.54	-1.61	-1.30
0.25	U	-4.40	-6.62	-5.12	-3.03	-1.34	-1.22
	L	-1.44	-2.42	-2.67	-1.57	- .85	---
0.5	U	---	-4.50	-4.26	-2.62	-1.34	-1.16
	L	-1.09	-1.42	-1.38	- .96	- .46	- .30
1.0	U	-2.40	---	-3.08	-2.19	-1.34	-1.14
	L	- .12	---	- .40	- .15	- .04	.01
1.5	U	-2.04	-2.68	---	-2.09	-1.39	-1.18
	L	---	- .18	- .07	- .01	.17	---
2.5	U	-1.66	-1.86	-2.18	-2.00	-1.37	-1.20
	L	.22	.13	.18	.20	.24	.23
3.5	U	-1.41	-1.68	-2.10	-1.92	-1.28	-1.32
	L	.26	---	.24	.24	.26	---
5.0	U	-1.19	-1.44	-1.92	-1.87	-1.24	-1.28
	L	.25	.30	.26	.26	.27	.16
7.5	U	- .97	-1.18	-1.60	-1.78	-1.24	-1.19
	L	.26	.36	.26	.26	.30	.26
10.0	U	- .86	-1.02	-1.28	-1.66	-1.26	-1.04
	L	.34	.38	.01	.23	.37	.27
15.0	U	- .72	- .80	- .86	-1.32	-1.20	- .94
	L	- .02	- .15	.01	- .04	- .44	- .42
17.5	U	- .67	---	---	---	---	---
	L	- .47	---	---	---	---	---

SLAT $\alpha = 16.2$

Orifice Location Percent Chord		STATIONS I	A	B	C	D	E
0		-4.71	-7.54	-2.46	-1.37	-1.00	-0.67
0.25	U	-4.92	-6.62	-1.96	-1.30	- .86	- .62
	L	-1.72	-2.88	-1.50	- .88	- .54	---
0.5	U	-4.92	-4.60	-1.96	-1.30	- .84	- .59
	L	- .88	-1.74	- .82	- .54	- .26	- .08
1.0	U	-2.58	---	-2.00	-1.28	- .84	- .56
	L	- .22	---	- .20	- .02	.04	.12
1.5	U	-2.17	-2.72	---	-1.28	- .84	- .56
	L	---	- .30	.04	.08	.21	---
2.5	U	-1.75	-2.29	-2.21	-1.28	- .85	- .56
	L	.19	.06	.22	.22	.26	.24
3.5	U	-1.49	-2.16	-2.28	-1.29	- .85	- .59
	L	.24	---	.26	.24	.28	---
5.0	U	-1.26	-2.02	-1.96	-1.30	- .84	- .56
	L	.26	.30	.26	.26	.28	.16
7.5	U	-1.04	-1.62	-1.55	-1.32	- .82	- .58
	L	.28	.37	.26	.25	.30	.27
10.0	U	- .92	-1.27	-1.46	-1.36	- .82	- .58
	L	.34	.38	.02	.22	.36	.27
15.0	U	- .76	- .88	-1.33	-1.33	- .82	- .59
	L	- .04	- .20	.02	- .06	- .26	- .26
17.5	U	- .70	---	---	---	---	---
	L	- .50	---	---	---	---	---

WING

Orifice Location Percent Chord		STATIONS I	A	B	C	D	E
5.0	U	-0.79	-0.28	-0.92	-0.84	-0.54	-0.74
6.0	U	- .38	- .44	- .80	-1.01	- .84	- .95
	L	.35	.42	.26	.24	.32	.34
7.5	U	- .81	-1.04	-1.08	-1.42	-1.36	-1.14
	L	.43	.40	---	.29	.34	.32
10.0	U	- .79	---	-1.00	-1.05	-1.12	- .85
	L	.41	---	.28	.30	---	---
12.5	U	- .72	- .91	- .88	- .85	- .81	- .60
15.0	U	- .59	- .78	- .90	- .75	- .79	- .63
17.5	U	- .58	-1.10	-1.05	- .90	- .74	- .82
20.0	U	- .66	- .74	---	- .65	- .67	---
	L	---	.22	---	.27	.26	.23
30.0	U	- .42	- .52	- .54	- .46	- .56	- .42
	L	.24	.16	.21	.22	.20	---
40.0	U	- .37	- .42	- .39	- .36	- .46	- .39
	L	.19	.14	.17	.18	.17	.11
50.0	U	- .34	---	- .30	- .27	- .32	- .38
	L	.16	.12	.15	.15	.13	.08
60.0	U	- .28	- .25	- .19	---	- .10	- .18
	L	.14	.10	.12	.14	.12	.08
70.0	U	---	- .23	- .07	- .14	---	- .27
	L	---	.04	.12	.06	.11	.02
73.0	U	---	---	---	- .12	- .10	- .27
80.0	U	---	- .17	- .08	- .06	- .06	- .19
	L	---	.04	.08	.13	- .08	.02
85.0	U	---	- .12	- .02	- .04	- .06	- .16
	L	---	.01	.08	- .02	.05	.02
90.0	U	---	- .11	- .01	- .07	- .05	- .12
	L	---	0	.05	- .02	.05	.01
95.0	U	---	- .09	0	- .07	- .03	- .08
	L	---	- .02	---	- .02	.04	0

WING

Orifice Location Percent Chord		STATIONS I	A	B	C	D	E
5.0	U	-0.93	-0.38	-1.38	-0.98	-0.30	-0.49
6.0	U	- .43	- .46	-1.20	-1.12	- .58	- .66
	L	.34	.40	.24	.24	.33	.34
7.5	U	- .89	-1.06	-1.54	-1.60	-1.02	- .82
	L	.42	.40	---	.28	.36	.31
10.0	U	- .85	---	-1.18	-1.36	-1.02	- .70
	L	.39	---	.30	.29	---	---
12.5	U	- .77	- .95	- .97	-1.03	- .78	- .52
15.0	U	- .62	- .82	- .93	- .92	- .80	- .56
17.5	U	- .60	-1.13	- .93	- .78	- .76	- .92
20.0	U	- .68	- .77	---	- .72	- .66	---
	L	---	.23	---	.26	.22	.22
30.0	U	- .44	- .55	- .56	- .54	- .58	- .40
	L	.26	.18	.22	.22	.19	---
40.0	U	- .38	- .44	- .42	- .47	- .60	- .37
	L	.21	.16	.18	.17	.16	.08
50.0	U	- .35	---	- .34	- .40	- .57	- .38
	L	.17	.13	.16	.14	.12	.06
60.0	U	- .30	- .26	- .21	---	- .22	- .28
	L	.15	.11	.13	.12	.10	.04
70.0	U	---	- .24	- .10	- .26	---	- .48
	L	---	.04	.12	.08	.09	- .03
73.0	U	---	.03	.08	- .24	- .29	- .54
80.0	U	---	- .18	- .09	- .20	- .21	---
	L	---	.04	.08	.12	- .19	- .04
85.0	U	---	- .14	- .04	- .14	- .20	- .41
	L	---	.02	.08	- .02	.02	- .06
90.0	U	---	- .12	- .04	- .15	- .18	- .35
	L	---	.01	.04	- .02	.01	- .07
95.0	U	---	- .10	- .02	- .15	- .15	- .28
	L	---	- .02	---	- .02	- .02	- .10

NACA

TABLE VI.- CONTINUED

α = 17.2

SLAT

Orifice Location Percent Chord		STATIONS I	A	B	C	D	E
0		-5.43	-4.55	-2.03	-1.08	-0.84	-0.51
0.25	U	-5.60	-3.84	-1.66	-1.07	- .72	- .47
	L	-2.08	-2.32	-1.36	- .75	- .47	---
0.5	U	---	-3.31	-1.68	-1.07	- .72	- .44
	L	-1.12	-1.44	- .75	- .46	- .22	- .02
1.0	U	-2.88	---	-1.76	-1.07	- .72	- .44
	L	- .32	---	- .19	.01	.04	.13
1.5	U	-2.40	-2.79	---	-1.07	- .72	- .44
	L	---	- .20	.03	.12	.22	---
2.5	U	-1.93	-2.67	-1.92	-1.07	- .72	- .44
	L	.16	.12	.20	.23	.26	.24
3.5	U	-1.64	-2.62	-2.02	-1.08	- .72	- .43
	L	.25	---	.24	.25	.28	---
5.0	U	-1.40	-2.47	-1.84	-1.08	- .72	- .45
	L	.28	.32	.25	.26	.27	.16
7.5	U	-1.15	-2.32	-1.52	-1.09	- .72	- .45
	L	.30	.38	.25	.26	.29	.26
10.0	U	-1.01	-2.01	-1.44	-1.12	- .72	- .45
	L	.34	.39	0	.23	.34	.28
15.0	U	- .83	-1.13	-1.34	-1.12	- .71	- .46
	L	- .05	- .24	0	- .04	- .19	- .18
17.5	U	- .76	---	---	---	---	---
	L	- .56	---	---	---	---	---

WING

Orifice Location Percent Chord		STATIONS I	A	B	C	D	E
5.0	U	-1.04	-0.42	-1.52	-0.83	-0.22	-0.39
6.0	U	- .49	- .50	-1.29	- .96	- .47	- .54
	L	.32	.40	.22	.25	.32	.34
7.5	U	-1.00	-1.14	-1.69	-1.40	- .86	- .67
	L	.39	.40	---	.28	.34	.31
10.0	U	- .94	---	-1.35	-1.34	- .88	- .59
	L	.38	---	.28	.30	---	---
12.5	U	- .84	- .96	-1.16	-1.15	- .72	- .45
15.0	U	- .66	- .83	-1.10	-1.00	- .74	- .50
17.5	U	- .64	-1.16	-1.00	- .96	- .70	- .89
20.0	U	- .70	- .81	---	- .80	- .62	---
	L	---	.24	---	.26	.24	.21
30.0	U	- .48	- .58	- .67	- .66	- .54	- .36
	L	.26	.18	.21	.21	.18	---
40.0	U	- .43	- .47	- .51	- .61	- .50	- .31
	L	.20	.16	.17	.16	.14	.07
50.0	U	- .39	---	- .42	- .54	- .58	- .30
	L	.18	.13	.14	.13	.10	.04
60.0	U	- .34	- .28	- .26	---	- .29	- .30
	L	.15	.12	.11	.11	.06	.02
70.0	U	---	- .26	- .14	- .44	---	- .44
	L	---	.05	.10	.06	.05	- .06
73.0	U	---	---	---	- .42	- .50	- .50
80.0	U	---	- .21	- .12	- .36	- .40	---
	L	---	.04	.06	.10	- .26	- .08
85.0	U	---	- .16	- .06	- .27	- .38	- .45
	L	---	.02	.06	- .04	- .03	- .10
90.0	U	---	- .14	- .06	- .22	- .35	- .43
	L	---	.01	.03	- .04	- .05	- .12
95.0	U	---	- .12	- .04	- .22	- .31	- .41
	L	---	- .03	---	- .04	- .08	- .18

α = 18.2

SLAT

Orifice Location Percent Chord		STATIONS I	A	B	C	D	E
0		-6.35	-2.17	-1.71	-0.92	-0.70	-0.43
0.25	U	-6.45	-1.91	-1.43	- .88	- .59	- .39
	L	-2.54	-1.52	-1.22	- .65	- .38	---
0.5	U	---	-1.87	-1.45	- .88	- .58	- .37
	L	-1.41	- .96	- .66	- .38	- .16	.02
1.0	U	-3.20	---	-1.51	- .88	- .58	- .38
	L	- .46	---	- .16	.04	.08	.16
1.5	U	-2.66	-1.82	---	- .87	- .58	- .38
	L	---	- .08	.06	.13	.22	---
2.5	U	-2.12	-1.84	-1.60	- .87	- .58	- .38
	L	.14	.16	.23	.23	.26	.26
3.5	U	-1.81	-1.87	-1.65	- .87	- .58	- .37
	L	.25	---	.28	.25	.28	---
5.0	U	-1.56	-1.92	-1.58	- .87	- .58	- .39
	L	.30	.32	.28	.26	.27	.18
7.5	U	-1.29	-2.04	-1.42	- .87	- .58	- .39
	L	.34	.37	.28	.25	.30	.28
10.0	U	-1.12	-2.22	-1.34	- .88	- .58	- .39
	L	.37	.38	0	.24	.34	.29
15.0	U	- .91	-1.95	-1.24	- .88	- .58	- .41
	L	- .06	- .66	0	- .04	- .11	- .14
17.5	U	- .84	---	---	---	---	---
	L	- .60	---	---	---	---	---

WINGS

Orifice Location Percent Chord		STATIONS I	A	B	C	D	E
5.0	U	-1.14	-0.88	-1.43	-0.61	-0.12	-0.34
6.0	U	- .54	- .98	-1.20	- .74	- .35	- .47
	L	.30	.38	.26	.26	.33	.35
7.5	U	-1.10	-1.88	-1.60	-1.11	- .69	- .60
	L	.40	.40	---	.29	.34	.32
10.0	U	-1.02	---	-1.31	-1.08	- .72	- .52
	L	.40	---	.30	.30	---	---
12.5	U	- .90	- .96	-1.20	- .95	- .61	- .39
15.0	U	- .70	- .82	-1.26	- .90	- .64	- .44
17.5	U	- .66	-1.03	-1.16	-1.26	- .59	- .84
20.0	U	- .73	- .81	---	- .82	- .52	---
	L	---	.25	---	.36	.24	.22
30.0	U	- .50	- .62	- .74	- .64	- .52	- .34
	L	.28	.20	.22	.20	.18	---
40.0	U	- .45	- .51	- .64	- .62	- .40	- .29
	L	.24	.18	.20	.16	.13	.08
50.0	U	- .40	---	- .56	- .58	- .39	- .28
	L	.20	.15	.16	.12	.08	.04
60.0	U	- .36	- .22	- .34	---	- .30	- .30
	L	.16	.13	.14	.10	.06	.02
70.0	U	---	- .28	- .17	- .59	---	- .34
	L	---	.05	.11	.06	.02	- .06
73.0	U	---	---	---	- .60	- .52	- .37
80.0	U	---	- .23	- .14	- .52	- .46	- .39
	L	---	.04	.08	.08	- .28	- .10
85.0	U	---	- .19	- .07	- .42	- .48	- .43
	L	---	.02	.06	- .06	- .11	- .13
90.0	U	---	- .16	- .06	- .27	- .48	- .49
	L	---	0	.03	- .06	- .14	- .17
95.0	U	---	- .15	- .04	- .27	- .52	- .58
	L	---	- .03	---	- .06	- .22	- .25

NACA

TABLE VI.- CONCLUDED

$\alpha = 23.3$

SLAT

Orifice Location Percent Chord		STATIONS I	A	B	C	D	E
0			-1.99	-1.18	-0.74	-0.49	-0.36
0.25	U		-1.73	-1.04	- .69	- .44	- .34
	L	-5.13	-1.72	-1.06	- .62	- .36	---
0.5	U	---	-1.68	-1.04	- .68	- .44	- .32
	L	-3.12	-1.18	- .62	- .40	- .16	- .05
1.0	U	-4.62	---	-1.02	- .67	- .44	- .33
	L	-1.38	---	- .16	.01	.07	.12
1.5	U	-3.71	-1.60	---	- .66	- .44	- .33
	L	---	- .20	.06	.11	.23	---
2.5	U	-3.12	-1.60	-1.00	- .66	- .44	- .33
	L	- .15	.10	.24	.23	.27	.26
3.5	U	-3.00	-1.59	-1.00	- .66	- .44	- .33
	L	.10	---	.30	.26	.30	---
5.0	U	-2.93	-1.59	-1.00	- .66	- .44	- .34
	L	.30	.38	.33	.30	.31	.20
7.5	U	-1.80	-1.60	-1.02	- .66	- .45	- .35
	L	.40	.45	.33	.30	.33	.32
10.0	U	-1.48	-1.62	-1.03	- .67	- .45	- .36
	L	.40	.45	.01	.28	.37	.32
15.0	U	-1.32	-1.61	-1.01	- .66	- .45	- .37
	L	- .18	- .60	.01	- .02	- .04	- .10
17.5	U	-1.22	---	---	---	---	---
	L	- .88	---	---	---	---	---

WING

Orifice Location Percent Chord		STATIONS I	A	B	C	D	E
5.0	U	-1.56	-0.92	-1.18	-0.44	-0.04	-0.28
6.0	U	- .76	- .95	- .94	- .54	- .25	- .42
	L	.24	.43	.28	.28	.36	.36
7.5	U	-1.53	-2.04	-1.34	- .84	- .56	- .54
	L	.41	.46	---	.30	.37	.34
10.0	U	-1.45	---	-1.16	- .80	- .56	- .47
	L	.46	---	.35	.32	---	---
12.5	U	-1.28	-1.67	-1.03	- .75	- .48	- .35
15.0	U	- .96	-1.46	-1.12	- .70	- .53	- .42
17.5	U	- .84	-1.63	-1.24	-1.11	- .53	- .86
20.0	U	- .85	-1.21	---	- .74	- .48	---
	L	---	.35	---	.28	.28	.26
30.0	U	- .70	-1.02	- .79	- .60	- .48	- .36
	L	.41	.30	.27	.23	.21	---
40.0	U	- .62	- .94	- .68	- .51	- .39	- .33
	L	.36	.27	.23	.18	.16	.11
50.0	U	- .54	---	- .73	- .48	- .37	- .32
	L	.31	.24	.18	.12	.10	.07
60.0	U	- .48	- .46	- .75	---	- .34	- .32
	L	.26	.20	.14	.08	.07	.05
70.0	U	---	- .41	- .31	- .60	---	- .34
	L	---	.12	.11	.02	.02	- .04
73.0	U	---	---	---	- .64	- .43	- .35
80.0	U	---	- .34	- .57	- .60	- .43	---
	L	---	.11	.05	- .01	- .29	- .06
85.0	U	---	- .28	- .40	- .56	- .51	- .38
	L	---	.08	.02	- .11	- .15	- .08
90.0	U	---	- .26	- .38	- .35	- .57	- .40
	L	---	.04	- .04	- .11	- .18	- .12
95.0	U	---	- .23	- .30	- .35	- .66	- .40
	L	---	- .01	---	- .11	- .26	- .16

$\alpha = 27.3$

SLAT

Orifice Location Percent Chord		STATIONS I	A	B	C	D	E
0			-1.79	-1.00	-0.66	-0.50	-0.38
0.25	U		-1.55	- .90	- .62	- .46	- .36
	L	-7.06	-1.80	-1.04	- .66	- .46	---
0.5	U	---	-1.51	- .90	- .60	- .46	- .35
	L	-4.42	-1.32	- .65	- .46	- .27	- .14
1.0	U	-5.73	---	- .88	- .58	- .46	- .36
	L	-2.00	---	- .18	- .03	0	.04
1.5	U	-5.16	-1.44	---	- .58	- .46	- .36
	L	---	- .30	.02	.08	.18	---
2.5	U	-4.86	-1.43	- .87	- .58	- .46	- .36
	L	- .25	.04	.22	.23	.24	.24
3.5	U	-4.78	-1.43	- .87	- .58	- .46	- .35
	L	.11	---	.28	.27	.29	---
5.0	U	-4.55	-1.43	- .87	- .58	- .46	- .36
	L	.35	.40	.36	.35	.34	.21
7.5	U	-2.74	-1.43	- .88	- .60	- .46	- .36
	L	.56	.48	.36	.35	.36	.33
10.0	U	-2.18	-1.43	- .88	- .61	- .46	- .36
	L	.51	.50	0	.32	.39	.33
15.0	U	-1.86	-1.42	- .88	- .61	- .46	- .37
	L	- .28	- .52	0	0	- .04	- .10
17.5	U	-1.73	---	---	---	---	---
	L	-1.25	---	---	---	---	---

WING

Orifice Location Percent Chord		STATIONS I	A	B	C	D	E
5.0	U	-1.82	-0.84	-1.06	-0.45	-0.07	-0.28
6.0	U	- .92	- .82	- .82	- .48	- .26	- .43
	L	.21	.44	.30	.32	.36	.36
7.5	U	-1.93	-1.84	-1.19	- .78	- .56	- .56
	L	.42	.48	---	.35	.38	.35
10.0	U	-1.93	---	-1.07	- .75	- .58	- .48
	L	.49	---	.37	.36	---	---
12.5	U	-1.81	-1.55	- .97	- .68	- .52	- .37
15.0	U	-1.43	-1.40	-1.06	- .67	- .58	- .44
17.5	U	-1.34	-1.70	-1.17	-1.03	- .54	- .89
20.0	U	-1.46	-1.26	---	- .67	- .49	---
	L	---	.40	---	.34	.31	.28
30.0	U	-1.01	-1.04	- .76	- .60	- .51	- .38
	L	.46	.34	.30	.28	.24	---
40.0	U	- .84	- .96	- .64	- .53	- .48	- .36
	L	.41	.30	.26	.24	.20	.15
50.0	U	- .76	---	- .65	- .50	- .44	- .34
	L	.36	.26	.20	.16	.14	.11
60.0	U	- .66	- .84	- .67	---	- .38	- .32
	L	.29	.23	.13	.14	.10	.10
70.0	U	---	- .76	- .44	- .56	---	- .34
	L	---	.14	.08	.04	.06	.01
73.0	U	---	---	---	- .48	- .44	- .34
80.0	U	---	- .61	- .72	- .56	- .44	- .34
	L	---	.10	- .02	.06	- .33	- .02
85.0	U	---	- .50	- .62	- .55	- .46	- .34
	L	---	.06	- .08	- .14	- .08	- .04
90.0	U	---	- .46	- .54	- .40	- .46	- .34
	L	---	.01	- .16	- .14	- .11	- .07
95.0	U	---	- .36	- .62	- .40	- .46	- .33
	L	---	- .06	---	- .14	- .17	- .12

NACA

TABLE VII.- TABULATED PRESSURE COEFFICIENTS[1] FOR THE WING WITH LEADING-EDGE SLATS EXTENDED AND WITH DOUBLE-SLOTTED FLAPS DEFLECTED 55°. $R = 8.0 \times 10^6$

SLAT $\alpha = -6.0$

Orifice Location Percent Chord		STATIONS I	A	B	C	D	E
0		-3.08	-0.54	-0.31	-0.49	-0.28	-0.15
0.25	U	-1.42	-.06	-.10	-.08	0	.01
	L	-3.44	-.30	-.20	-.34	-.18	---
0.5	U	---	.07	.08	.06	.13	.14
	L	-3.24	-.27	-.19	-.32	-.18	-.06
1.0	U	-.12	---	.20	.17	.22	.20
	L	-1.86	---	-.18	-.29	-.20	-.08
1.5	U	.04	.20	---	.22	.24	.20
	L	---	-.34	-.18	-.32	-.17	---
2.5	U	.15	.21	.23	.22	.24	.23
	L	-1.23	-.34	-.18	-.34	-.16	-.07
3.5	U	.20	.20	.16	.21	.22	.22
	L	-1.02	---	-.19	-.29	-.15	---
5.0	U	.22	.18	.16	.20	.21	.19
	L	-.84	-.28	-.16	-.20	-.14	-.04
7.5	U	.21	.14	.14	.16	.16	.14
	L	---	.27	-.17	-.20	-.14	-.06
10.0	U	.18	.10	.08	.11	.15	.11
	L	-1.08	-.26	-.02	-.22	-.15	-.06
15.0	U	.12	.02	.02	.01	.06	.04
	L	-.12	-.28	-.02	-.04	-.12	-.16
17.5	U	.03	---	---	---	---	---
	L	-.46	---	---	---	---	---

SLAT $\alpha = 0.1$

Orifice Location Percent Chord		STATIONS I	A	B	C	D	E
0		0.02	0.14	0.22	0.18	0.22	0.18
0.25	U	.16	.13	.18	.09	.15	.16
	L	-.33	-.10	.08	.06	.07	---
0.5	U	---	.08	.07	0	.06	.12
	L	-.36	-.15	.03	0	.02	-.03
1.0	U	.12	---	-.02	-.05	.02	.04
	L	-.32	---	0	.01	-.02	-.03
1.5	U	.09	-.01	---	-.06	0	0
	L	---	-.04	0	-.02	.01	---
2.5	U	.04	-.04	-.07	-.09	-.04	-.02
	L	-.30	-.01	-.01	-.02	-.02	0
3.5	U	.02	-.06	-.10	-.10	-.07	-.01
	L	-.30	---	-.01	-.02	-.02	---
5.0	U	0	-.08	-.12	-.11	-.07	-.05
	L	-.40	.07	-.04	-.04	-.01	0
7.5	U	-.02	-.12	-.14	-.14	-.12	-.06
	L	---	.03	-.10	-.19	-.01	-.05
10.0	U	-.04	-.14	-.18	-.16	-.12	-.10
	L	-.22	.02	0	-.20	-.01	-.07
15.0	U	-.08	-.18	-.19	-.22	-.17	-.18
	L	.02	-.12	0	-.03	-.09	-.10
17.5	U	-.10	---	---	---	---	---
	L	-.06	---	---	---	---	---

WING

Orifice Location Percent Chord		STATIONS I	A	B	C	D	E
5.0	U	-0.31	-0.32	-0.24	-0.32	-0.15	-0.17
6.0	U	---	-.32	---	-.34	-.14	-.17
	L	.03	-.28	-.21	-.23	-.12	-.07
7.5	U	-.37	-.26	-.23	-.30	-.13	-.14
	L	-.08	-.30	---	-.22	-.14	-.08
10.0	U	.28	---	.14	.11	.12	.15
	L	-.08	---	-.24	-.19	---	---
12.5	U	.16	-.02	.01	.03	.04	.08
15.0	U	.13	-.01	-.10	-.02	-.02	-.06
17.5	U	.09	-.14	-.18	-.12	-.16	-.36
20.0	U	.04	-.09	-.02	-.06	-.03	---
	L	-.06	-.68	---	-.18	-.20	-.08
30.0	U	.02	-.14	-.16	-.08	-.04	-.04
	L	-.18	-.15	-.40	-.20	-.16	---
40.0	U	-.04	-.20	-.18	-.10	-.04	-.08
	L	-.16	.04	-.32	-.31	-.18	-.14
50.0	U	-.06	---	-.24	-.11	-.04	-.08
	L	---	.07	-.11	-.44	-.20	-.16
60.0	U	-.12	-.30	-.22	-.08	-.08	---
	L	-.07	.11	.03	-.38	-.30	-.14
70.0	U	---	-.47	-.37	-.16	---	-.06
	L	---	.12	.06	-.24	-.32	-.18
73.0	U	---	---	---	-.16	-.05	-.07
80.0	U	---	-.68	-.50	-.10	.02	-.06
	L	---	.02	-.39	-.04	.06	-.23
85.0	U	---			-.07	0	-.06
	L	---			-.02	-.20	-.23
90.0	U	---			-.07	.01	-.10
	L	---			-.02	-.11	-.22
95.0	U	---			---	.01	-.12
	L	---			-.02	-.05	-.22

WING

Orifice Location Percent Chord		STATIONS I	A	B	C	D	E
5.0	U	-0.20	-0.30	-0.56	-0.52	-0.27	-0.34
6.0	U	---	-.19	---	-.24	-.18	-.16
	L	-.14	.20	.28	.19	.08	.35
7.5	U	-.16	-.24	-.50	-.26	-.21	-.22
	L	0	.24	---	.20	.15	.26
10.0	U	-.13	---	-.38	-.35	-.25	-.25
	L	.10	---	.22	.17	---	---
12.5	U	-.12	-.37	-.38	-.35	-.28	-.21
15.0	U	-.13	-.34	-.46	-.35	-.35	-.30
17.5	U	-.16	-.50	-.56	-.54	-.50	-.66
20.0	U	-.24	-.39	0	-.36	-.29	---
	L	.03	.07	---	.08	.05	.06
30.0	U	-.20	-.38	-.40	-.29	-.25	-.18
	L	.01	.06	.12	.04	0	---
40.0	U	-.24	-.39	-.37	-.26	-.22	-.17
	L	-.02	.07	.12	.02	-.02	-.02
50.0	U	-.26	---	-.40	-.25	-.18	-.14
	L	---	.12	.14	-.02	-.04	-.02
60.0	U	-.28	-.44	-.36	-.20	-.12	---
	L	.02	.14	.15	-.02	-.02	0
70.0	U	---	-.61	-.47	-.22	---	-.07
	L	---	.16	.14	-.08	0	-.01
75.0	U	---	---	---	-.22	-.12	-.07
80.0	U	---	-.79	-.56	-.14	-.06	-.04
	L	---	0	-.15	-.02	-.05	-.01
85.0	U	---			-.10	-.06	-.03
	L	---			.01	-.03	0
90.0	U	---			-.08	-.03	-.02
	L	---			.02	0	.02
95.0	U	---			---	-.02	0
	L	---			.02	.01	.02

FORE FLAP

Orifice Location Percent Chord		STATIONS A	B
0		-1.26	-0.90
1.0	U	-2.70	-1.53
	L	.21	-.30
2.0	U	-2.54	-1.42
	L	.35	-.14
3.0	U	-2.30	-1.21
	L	.32	-.10
4.0	U	-1.70	-.99
	L	.26	---
5.0	U	-1.52	-.92
	L	.18	-.18
6.0	U	-1.00	.02
	L	---	-.22

MAIN FLAP

Orifice Location Percent Chord		STATIONS A	B
75.0		-0.56	0.02
75.25	U	---	---
	L	---	-.44
75.5	U	-.64	-.01
	L	.06	-.32
76.0	U	-.82	-.89
	L	.29	-.08
77.5	U	-1.28	-.64
	L	.40	.14
80.0	U	-.92	---
	L	.39	.18
82.5	U	-.70	---
	L	.36	.28
85.0	U	-.56	-.40
	L	.34	.24
90.0	U	-.39	-.24
	L	.26	.18
95.0	U	-.33	-.12
	L	.16	.18

FORE FLAP

Orifice Location Percent Chord		STATIONS A	B
0		-1.39	-1.18
1.0	U	-2.94	-1.80
	L	.28	.18
2.0	U	-2.73	-1.53
	L	.39	.12
3.0	U	-2.44	-1.22
	L	.35	.14
4.0	U	-1.78	-1.01
	L	.30	---
5.0	U	-1.38	-.96
	L	.20	.08
6.0	U	-1.05	.07
	L	---	0

MAIN FLAP

Orifice Location Percent Chord		STATIONS A	B
75.0		-0.50	0.07
75.25	U	---	---
	L	---	-.28
75.5	U	-.84	-.04
	L	.14	-.13
76.0	U	-.82	-.91
	L	.34	.10
77.5	U	-1.34	-.68
	L	.43	.50
80.0	U	-.98	---
	L	.43	.32
82.5	U	-.74	---
	L	.40	.36
85.0	U	-.59	-.36
	L	.36	.33
90.0	U	-.40	-.24
	L	.30	.26
95.0	U	-.34	-.10
	L	.18	.23

[1]Pressure coefficients tabulated are defined as $(p_l-p)/q$

TABLE VII.- CONTINUED

SLAT $\alpha = 8.2$

Orifice Location Percent Chord		STATIONS I	A	B	C	D	E
0		-0.92	-2.79	-4.65	-4.60	-4.52	-3.24
0.25	U	-1.34	-2.87	-3.51	-4.58	-4.18	-3.33
	L	- .02	- .62	-1.25	-1.29	-1.28	---
0.5	U	---	-2.45	-3.13	-3.76	-3.21	-2.71
	L	.12	- .24	- .53	- .71	- .64	- .32
1.0	U	- .94	---	-2.32	-2.54	-2.24	-2.17
	L	.18	---	- .02	- .06	- .11	- .01
1.5	U	- .82	-1.52	---	-2.04	-1.84	-1.74
	L	---	.16	.14	.05	.12	---
2.5	U	- .72	-1.16	-1.40	-1.56	-1.45	-1.41
	L	.15	.24	.24	.16	.18	.21
3.5	U	- .65	-1.00	-1.25	-1.30	-1.22	-1.02
	L	.12	---	.24	.17	.21	---
5.0	U	- .57	- .86	-1.06	-1.09	-1.03	- .92
	L	.02	.27	.16	.16	.19	.12
7.5	U	- .48	- .77	- .88	- .93	- .90	- .76
	L	---	.30	.18	.16	.22	.20
10.0	U	- .46	- .71	- .81	- .86	- .76	- .71
	L	.14	.32	0	.17	.26	.21
15.0	U	- .44	- .62	- .70	- .78	- .68	- .61
	L	.04	- .10	0	- .02	- .16	- .26
17.5	U	- .42	---	---	---	---	---
	L	- .29	---	---	---	---	---

SLAT $\alpha = 10.2$

Orifice Location Percent Chord		STATIONS I	A	B	C	D	E
0		-1.82	-4.52	-7.13	-7.01	-6.95	-5.04
0.25	U	-2.24	-4.36	-4.99	-6.62	-5.70	-4.73
	L	- .35	-1.34	-2.24	-2.31	-2.28	---
0.5	U	---	-3.18	-4.26	-4.82	-4.42	-3.63
	L	- .05	- .90	-1.10	-1.39	-1.30	- .80
1.0	U	-1.37	---	-3.09	-3.38	-2.95	-2.97
	L	.15	---	- .28	- .37	- .43	- .26
1.5	U	-1.21	-2.09	---	-2.61	-2.38	-2.30
	L	---	.03	- .01	- .14	- .06	---
2.5	U	-1.02	-1.54	-1.79	-1.94	-1.86	-1.83
	L	- .21	.20	.18	.09	.11	.16
3.5	U	- .89	-1.32	-1.56	-1.64	-1.66	-1.43
	L	- .20	---	.23	.14	.18	---
5.0	U	- .78	-1.12	-1.39	-1.46	-1.48	-1.28
	L	- .12	.29	.23	.20	.22	.14
7.5	U	- .64	- .97	-1.08	-1.31	-1.15	-1.02
	L	---	.34	.23	.20	.24	.23
10.0	U	- .58	- .87	- .98	-1.14	- .94	- .88
	L	.24	.36	.02	.18	.30	.23
15.0	U	- .54	- .75	- .82	- .93	- .82	- .77
	L	.02	.14	.02	- .02	- .24	- .34
17.5	U	- .51	---	---	---	---	---
	L	- .36	---	---	---	---	---

WING

Orifice Location Percent Chord		STATIONS I	A	B	C	D	E
5.0	U	-0.24	-0.18	-0.72	-0.36	-0.16	-0.52
6.0	U	---	- .35	---	- .60	- .41	- .68
	L	.36	.42	.24	.20	.27	.29
7.5	U	- .42	- .85	- .98	- .88	- .75	- .84
	L	.38	.39	---	.22	.28	.26
10.0	U	- .49	---	- .98	- .94	- .78	- .78
	L	.37	---	.25	.22	---	---
12.5	U	- .50	- .84	- .90	- .88	- .76	- .65
15.0	U	- .44	- .74	- .93	- .83	- .81	- .68
17.5	U	- .45	-1.06	-1.15	-1.28	- .80	-1.60
20.0	U	- .56	- .75	---	- .78	- .77	---
	L	.13	.22	---	.16	.18	.15
30.0	U	- .38	- .61	- .68	- .58	- .52	- .44
	L	.18	.18	.20	.14	.16	---
40.0	U	- .35	- .58	- .52	- .49	- .40	- .36
	L	.14	.19	.18	.10	.10	.04
50.0	U	- .35	---	- .52	- .42	- .32	- .27
	L	---	.20	.18	.07	.07	.02
60.0	U	- .35	- .66	- .48	- .32	- .15	---
	L	.16	.22	.18	.06	.07	.04
70.0	U	---	- .68	- .56	- .31	---	- .15
	L	---	.23	.18	0	.07	.02
73.0	U	---	---	---	- .29	- .16	- .13
80.0	U	---	- .83	- .64	- .21	- .10	- .09
	L	---	.02	- .13	.04	- .07	0
85.0	U	---			- .17	- .08	- .08
	L	---			.02	.03	0
90.0	U	---			- .14	- .05	- .06
	L	---			.02	.04	0
95.0	U	---			---	- .02	- .03
	L	---			.02	.04	0

WING

Orifice Location Percent Chord		STATIONS I	A	B	C	D	E
5.0	U	-0.32	-0.23	-0.89	-0.62	-0.26	-0.62
6.0	U	---	- .42	---	- .71	- .50	- .80
	L	.33	.41	.24	.18	.26	.28
7.5	U	- .54	- .98	-1.10	-1.04	- .87	- .98
	L	.37	.40	---	.20	.28	.16
10.0	U	- .60	---	-1.08	-1.08	- .88	- .90
	L	.38	---	.27	.22	---	---
12.5	U	- .59	- .96	- .98	-1.00	- .85	- .73
15.0	U	- .62	- .84	-1.00	- .93	- .90	- .76
17.5	U	- .53	-1.20	-1.22	-1.42	- .87	-1.68
20.0	U	- .54	- .84	---	- .88	- .84	---
	L	.12	.23	---	.20	.19	.18
30.0	U	- .42	- .66	- .70	- .65	- .57	- .45
	L	.20	.20	.23	.16	.14	---
40.0	U	- .38	- .62	- .60	- .54	- .43	- .37
	L	.16	.20	.22	.12	.12	.07
50.0	U	- .37	---	- .57	- .44	- .34	- .28
	L	---	.22	.22	.10	.08	.06
60.0	U	- .37	- .56	- .46	- .32	- .15	---
	L	.18	.24	.22	.08	.08	.06
70.0	U	---	- .68	- .53	- .31	---	- .14
	L	---	.24	.21	.02	.08	.03
73.0	U	---	---	---	- .30	- .16	- .13
80.0	U	---	- .82	- .56	- .22	- .10	- .09
	L	---	.03	- .11	.06	- .06	- .02
85.0	U	---			- .18	- .09	- .07
	L	---			.04	.03	- .02
90.0	U	---			- .14	- .06	- .05
	L	---			.04	.04	- .02
95.0	U	---			---	- .03	- .04
	L	---			.04	.04	- .02

FORE FLAP

Orifice Location Percent Chord		STATIONS A	B
0		-1.41	-1.19
1.0	U	-2.94	-1.70
	L	.32	.24
2.0	U	-2.72	-1.45
	L	.43	.11
3.0	U	-2.44	-1.13
	L	.40	.14
4.0	U	-1.75	- .94
	L	.34	---
5.0	U	-1.32	- .89
	L	.26	.08
6.0	U	- .98	.08
	L	---	.01

MAIN FLAP

Orifice Location Percent Chord		STATIONS A	B
75.0		-0.28	0.08
75.25	U	---	---
	L	---	- .24
75.5	U	- .82	.08
	L	.18	- .10
76.0	U	- .80	- .87
	L	.38	.12
77.5	U	-1.30	- .70
	L	.47	.29
80.0	U	- .88	---
	L	.46	.31
82.5	U	- .64	---
	L	.44	.36
85.0	U	- .50	- .36
	L	.41	.32
90.0	U	- .33	- .25
	L	.36	.25
95.0	U	- .28	- .10
	L	.26	.23

FORE FLAP

Orifice Location Percent Chord		STATIONS A	B
0		-1.34	-0.92
1.0	U	-2.79	-1.84
	L	.39	.14
2.0	U	-2.58	-1.31
	L	.44	.10
3.0	U	-2.30	-1.03
	L	.40	.13
4.0	U	-1.64	- .84
	L	.35	---
5.0	U	-1.24	- .81
	L	.26	.07
6.0	U	- .91	.12
	L	---	0

MAIN FLAP

Orifice Location Percent Chord		STATIONS A	B
75.5		-0.25	0.12
75.25	U	---	---
	L	---	- .22
75.5	U	- .58	.12
	L	.16	- .10
76.0	U	- .75	- .79
	L	.37	.10
77.5	U	-1.22	- .60
	L	.46	.29
80.0	U	- .82	---
	L	.46	.31
82.5	U	- .58	---
	L	.44	.37
85.0	U	- .45	- .30
	L	.42	.33
90.0	U	- .30	- .19
	L	.39	.27
95.0	U	- .24	- .06
	L	.26	.25

NACA

TABLE VII.- CONTINUED

SLAT

α = 11.2

Orifice Location Percent Chord		STATIONS I	A	B	C	D	E
0		-2.48	-5.96	-9.30	-8.22	-2.58	-1.88
0.25	U	-2.86	-5.62	-6.32	-7.59	-2.13	-1.74
	L	- .66	-1.98	-3.18	-2.98	-1.38	---
0.5	U	---	-5.96	-5.28	-5.36	-2.14	-1.67
	L	- .23	-1.14	-1.66	-1.86	- .83	- .46
1.0	U	-1.69	---	-3.78	-3.62	-2.80	-1.73
	L	- .05	---	- .56	- .59	- .25	- .11
1.5	U	-1.47	-2.46	---	-2.76	-2.26	-1.82
	L	---	- .10	- .18	- .29	.04	---
2.5	U	-1.22	-1.82	-2.14	-2.26	-2.18	-1.82
	L	.20	.15	.12	.02	.15	.17
3.5	U	-1.07	-1.54	-1.86	-2.13	-2.08	-1.93
	L	.20	---	.18	.10	.21	---
5.0	U	- .92	-1.30	-1.58	-2.02	-1.99	-1.94
	L	.16	.30	.23	.11	.24	.14
7.5	U	- .85	-1.12	-1.32	-1.74	-1.98	-1.44
	L	---	.34	.23	.12	.26	.22
10.0	U	- .68	- .98	-1.16	-1.27	-1.72	-1.08
	L	.28	.37	0	.19	.31	.22
15.0	U	- .61	- .84	- .92	-1.03	-1.15	- .93
	L	0	- .19	0	.04	- .32	- .42
17.5	U	- .58	---	---	---	---	---
	L	- .41	---	---	---	---	---

SLAT

α = 12.3

Orifice Location Percent Chord		STATIONS I	A	B	C	D	E
0		-2.94	-7.19	-9.82	-3.36	-1.75	-1.12
0.25	U	-3.31	-6.66	-6.94	-3.19	-1.50	-1.06
	L	- .87	-2.52	-3.68	-1.97	-1.02	---
0.5	U	---	-4.57	-5.72	-2.98	-1.50	-1.02
	L	- .36	-1.48	-1.98	-1.28	- .59	- .38
1.0	U	-1.90	---	-4.06	-2.94	-1.58	-1.06
	L	.03	---	- .72	- .38	- .15	- .02
1.5	U	-1.64	-2.76	---	-2.89	-1.63	-1.08
	L	---	- .20	- .28	- .15	.09	---
2.5	U	-1.34	-2.04	-2.34	-2.91	-1.64	-1.08
	L	.21	- .10	.07	.08	.18	.20
3.5	U	-1.16	-1.73	-2.12	-2.88	-1.54	-1.05
	L	.22	---	.17	.15	.22	---
5.0	U	-1.00	-1.45	-1.91	-2.78	-1.44	-1.12
	L	.18	.30	.24	.23	.24	.14
7.5	U	- .82	-1.22	-1.62	-2.41	-1.42	-1.14
	L	---	.37	.24	.23	.26	.24
10.0	U	- .74	-1.08	-1.29	-1.96	-1.42	-1.12
	L	.30	.38	0	.19	.34	.24
15.0	U	- .65	- .90	-1.00	-1.15	-1.42	-1.04
	L	- .01	- .22	0	- .04	- .58	- .47
17.5	U	- .62	---	---	---	---	---
	L	- .44	---	---	---	---	---

WING

Orifice Location Percent Chord		STATIONS I	A	B	C	D	E
5.0	U	-0.46	-0.32	-1.06	-0.78	-0.38	-0.76
6.0	U	---	- .48	---	- .80	- .63	- .99
	L	.33	.40	.22	.18	.26	.28
7.5	U	- .60	-1.09	-1.24	-1.15	-1.04	-1.18
	L	.40	.40	---	.20	.28	.26
10.0	U	- .66	---	-1.21	-1.16	- .92	- .99
	L	.40	---	.27	.22	---	---
12.5	U	- .63	-1.02	-1.08	-1.08	- .84	- .73
15.0	U	- .54	- .89	-1.01	- .99	- .86	- .73
17.5	U	- .56	-1.26	-1.33	-1.50	- .85	-1.14
20.0	U	- .66	- .89	---	- .94	- .77	---
	L	.15	.24	---	.21	.22	.18
30.0	U	- .43	- .70	- .77	- .68	- .60	- .48
	L	.24	.22	.23	.16	.16	---
40.0	U	- .40	- .64	- .64	- .58	- .46	- .44
	L	.21	.22	.22	.14	.14	.06
50.0	U	- .38	---	- .61	- .47	- .38	- .38
	L	---	.23	.23	.10	.10	.06
60.0	U	- .37	- .58	- .49	- .35	- .17	---
	L	.21	.24	.22	.08	.09	.06
70.0	U	---	- .68	- .56	- .33	---	- .19
	L	---	.24	.20	.02	.08	.03
73.0	U	---	---	---	- .32	- .18	- .17
80.0	U	---	- .80	- .60	- .24	- .11	- .12
	L	---	.06	- .11	.06	- .06	.01
85.0	U	---			- .20	- .09	- .10
	L	---			.03	.03	.01
90.0	U	---			- .17	- .06	- .07
	L	---			.03	.04	.01
95.0	U	---			---	- .03	- .05
	L	---			.03	.04	.01

WING

Orifice Location Percent Chord		STATIONS I	A	B	C	D	E
5.0	U	-0.60	-0.40	-1.16	-0.86	-0.78	-0.83
6.0	U	---	- .51	---	- .88	-1.06	-1.08
	L	.30	.41	.21	.18	.24	.30
7.5	U	- .69	-1.15	-1.32	-1.24	-1.66	-1.29
	L	.40	.41	---	.22	.26	.28
10.0	U	- .72	---	-1.28	-1.16	-1.48	-1.11
	L	.38	---	.26	.24	---	---
12.5	U	- .70	-1.06	-1.16	-1.05	-1.07	- .82
15.0	U	- .60	- .94	-1.17	- .98	- .94	- .79
17.5	U	- .60	-1.32	-1.40	-1.46	- .92	-1.12
20.0	U	- .71	- .92	---	- .94	- .88	---
	L	.13	.26	---	.22	.20	.20
30.0	U	- .46	- .72	- .81	- .71	- .72	- .52
	L	.22	.23	.24	.18	.16	---
40.0	U	- .44	- .66	- .68	- .59	- .52	- .50
	L	.20	.23	.24	.15	.15	.08
50.0	U	- .42	---	- .63	- .50	- .39	- .48
	L	---	.24	.22	.12	.10	.06
60.0	U	- .41	- .58	- .52	- .37	- .21	---
	L	.19	.25	.22	.08	.08	.06
70.0	U	---	- .66	- .56	- .35	---	- .36
	L	---	.25	.21	.04	.08	.04
73.0	U	---	---	---	- .34	- .20	- .32
80.0	U	---	- .78	- .60	- .26	- .13	- .24
	L	---	.06	- .11	.07	- .10	.02
85.0	U	---			- .21	- .12	- .18
	L	---			.03	.02	.02
90.0	U	---			- .18	- .09	- .14
	L	---			.03	.02	.02
95.0	U	---			---	- .06	- .07
	L	---			.03	.02	.02

FORE FLAP

Orifice Location Percent Chord		STATIONS A	B
0		-1.28	-0.86
1.0	U	-2.68	-1.50
	L	.32	.12
2.0	U	-2.46	-1.28
	L	.43	.06
3.0	U	-2.20	-1.01
	L	.40	.10
4.0	U	-1.56	- .82
	L	.34	---
5.0	U	-1.19	- .78
	L	.28	.04
6.0	U	- .88	.10
	L	---	- .04

MAIN FLAP

Orifice Location Percent Chord		STATIONS A	B
75.0		-0.24	0.10
75.25	U	---	---
	L	---	- .24
75.5	U	- .54	.10
	L	.15	- .11
76.0	U	- .72	- .78
	L	.36	.10
77.5	U	-1.18	- .60
	L	.45	.28
80.0	U	- .80	---
	L	.45	.30
82.5	U	- .56	---
	L	.44	.36
85.0	U	- .44	- .30
	L	.42	.32
90.0	U	- .29	- .20
	L	.37	.26
95.0	U	- .24	- .07
	L	.27	.24

FORE FLAP

Orifice Location Percent Chord		STATIONS A	B
0		-1.25	-0.84
1.0	U	-2.68	-1.49
	L	.33	.14
2.0	U	-2.46	-1.28
	L	.44	.17
3.0	U	-2.18	-1.00
	L	.40	.10
4.0	U	-1.55	- .81
	L	.35	---
5.0	U	-1.18	- .76
	L	.28	.04
6.0	U	- .87	.10
	L	---	- .04

MAIN FLAP

Orifice Location Percent Chord		STATIONS A	B
75.0		-0.23	0.10
75.25	U	---	---
	L	---	- .22
75.5	U	- .53	.10
	L	.18	- .10
76.0	U	- .70	- .78
	L	.38	.11
77.5	U	-1.17	- .62
	L	.46	.28
80.0	U	- .80	---
	L	.46	.31
82.5	U	- .56	---
	L	.45	.37
85.0	U	- .44	- .30
	L	.43	.33
90.0	U	- .28	- .20
	L	.38	.26
95.0	U	- .23	- .07
	L	.30	.24

NACA

TABLE VII.- CONTINUED

SLAT $\alpha = 14.3$

Orifice Location Percent Chord		STATIONS I	A	B	C	D	E
0		-4.36	-9.26	-2.29	-1.48	-1.06	-0.70
0.25	U	-4.60	-7.87	-1.98	-1.45	- .97	- .67
	L	-1.56	-3.68	-1.78	-1.38	- .72	---
0.5	U	---	-5.52	-1.98	-1.44	- .96	- .64
	L	- .79	-2.28	-1.07	- .81	- .42	- .16
1.0	U	-2.50	---	-1.98	-1.42	- .94	- .64
	L	- .19	---	- .38	- .19	- .08	.03
1.5	U	-2.12	-3.16	---	-1.42	- .94	- .64
	L	---	- .48	- .10	.04	.13	---
2.5	U	-1.73	-2.70	-2.04	-1.42	- .94	- .64
	L	.18	- .02	.14	.13	.18	.19
3.5	U	-1.48	-2.56	-2.12	-1.42	- .94	- .63
	L	.24	---	.22	.17	.23	---
5.0	U	-1.26	-2.42	-2.20	-1.44	- .95	- .64
	L	.24	.32	.26	.24	.24	.14
7.5	U	-1.04	-1.82	-2.25	-1.44	- .95	- .64
	L	---	.39	.26	.24	.27	.24
10.0	U	- .93	-1.39	-2.29	-1.46	- .96	- .64
	L	.33	.40	0	.20	.33	.24
15.0	U	- .78	-1.05	-1.99	-1.46	- .96	- .64
	L	- .04	- .30	0	- .07	- .33	.26
17.5	U	- .74	---	---	---	---	---
	L	- .52	---	---	---	---	---

SLAT $\alpha = 18.3$

Orifice Location Percent Chord		STATIONS I	A	B	C	D	E
0		-7.43	-2.38	-1.66	-1.06	-0.81	-0.62
0.25	U	-7.50	-2.20	-1.50	-1.01	- .75	- .61
	L	-3.21	-1.98	-1.53	- .98	- .68	---
0.5	U	---	-2.16	-1.49	-1.00	- .75	- .60
	L	-1.52	-1.37	- .96	- .72	- .44	- .25
1.0	U	-3.64	---	-1.48	- .98	- .75	- .60
	L	- .68	---	- .35	- .18	.12	- .04
1.5	U	-3.03	-2.13	---	- .97	- .74	- .60
	L	---	- .28	- .08	- .06	.08	---
2.5	U	-2.42	-2.04	-1.48	- .96	- .74	- .59
	L	.09	.09	.16	.12	.16	.16
3.5	U	-2.08	-2.16	-1.48	- .96	- .74	- .56
	L	.24	---	.23	.17	.21	---
5.0	U	-1.84	-2.20	-1.48	- .96	- .74	- .59
	L	.34	.34	.32	.26	.25	.15
7.5	U	-1.44	-2.24	-1.48	- .96	- .74	- .59
	L	---	.42	.32	.27	.28	.24
10.0	U	-1.28	-2.33	-1.48	- .96	- .74	- .59
	L	.41	.40	.02	.24	.32	.24
15.0	U	-1.05	-2.27	-1.48	- .96	- .74	- .59
	L	- .08	- .94	.02	.03	- .20	- .26
17.5	U	- .98	---	---	---	---	---
	L	- .69	---	---	---	---	---

WING

Orifice Location Percent Chord		STATIONS I	A	B	C	D	E
5.0	U	-0.89	-0.56	-2.06	-1.26	-0.40	-0.54
6.0	U	---	- .60	---	-1.24	- .64	- .72
	L	.33	.41	.17	.18	.26	.29
7.5	U	- .90	-1.36	-2.21	-1.77	-1.10	- .88
	L	.42	.42	---	.23	.30	.27
10.0	U	- .87	---	-1.56	-1.68	-1.16	- .77
	L	.40	---	.28	.25	---	---
12.5	U	- .81	-1.22	-1.26	-1.50	- .98	- .63
15.0	U	- .68	-1.07	-1.22	-1.32	- .86	- .66
17.5	U	- .66	-1.47	-1.21	-1.34	- .84	-1.06
20.0	U	- .78	-1.03	---	-1.10	- .77	---
	L	.14	.29	---	.24	.22	.18
30.0	U	- .51	- .90	- .67	- .85	- .74	- .49
	L	.26	.26	.26	.20	.16	---
40.0	U	- .48	- .70	- .73	- .79	- .64	- .45
	L	.24	.26	.25	.16	.13	.06
50.0	U	- .46	---	- .68	- .71	- .67	- .44
	L	---	.27	.24	.12	.09	.02
60.0	U	- .45	- .61	- .56	- .57	- .33	---
	L	.23	.26	.24	.11	.07	.02
70.0	U	---	- .68	- .60	- .50	---	- .51
	L	---	.26	.22	.15	.06	- .03
73.0	U	---	---	---	- .46	- .55	- .56
80.0	U	---	- .76	- .60	- .37	- .42	- .51
	L	---	.10	- .10	.08	- .19	- .09
85.0	U	---			- .30	- .38	- .50
	L	---			.04	- .03	- .10
90.0	U	---			- .24	- .32	- .47
	L	---			.04	- .04	- .14
95.0	U	---			---	- .27	- .43
	L	---			.04	- .06	- .18

WING

Orifice Location Percent Chord		STATIONS I	A	B	C	D	E
5.0	U	-1.35	-1.36	-1.76	-0.84	-0.28	-0.48
6.0	U	---	-1.41	---	- .81	- .47	- .66
	L	.29	.36	.21	.22	.26	.28
7.5	U	-1.29	-2.80	-1.94	-1.20	- .85	- .80
	L	.42	.42	---	.26	.29	.26
10.0	U	-1.19	---	-1.69	-1.15	- .88	- .72
	L	.44	---	.33	.28	---	---
12.5	U	-1.06	-1.68	-1.50	-1.06	- .83	- .61
15.0	U	- .86	-1.38	-1.70	-1.02	- .82	- .66
17.5	U	- .80	-1.38	-1.97	-1.56	- .79	-1.15
20.0	U	- .82	-1.29	---	-1.03	- .73	---
	L	.20	.33	---	.26	.23	.18
30.0	U	- .62	- .96	-1.18	- .95	- .72	- .54
	L	.36	.30	.32	.23	.18	---
40.0	U	- .56	- .78	-1.04	- .90	- .70	- .52
	L	.33	.30	.30	.21	.14	.06
50.0	U	- .54	---	-1.10	- .82	- .65	- .49
	L	.32	.30	.29	.16	.10	.03
60.0	U	- .52	- .87	- .93	- .75	- .58	---
	L	.30	.31	.28	.15	.08	.02
70.0	U	---	- .72	- .80	- .78	---	- .51
	L	---	.30	.26	.10	.05	- .04
73.0	U	---	---	---	- .84	- .58	- .51
80.0	U	---	- .75	- .54	- .75	- .58	- .52
	L	---	.13	- .05	.12	- .23	- .09
85.0	U	---			- .71	- .64	- .54
	L	---			.06	- .08	- .12
90.0	U	---			- .71	- .74	- .54
	L	---			.06	- .11	- .15
95.0	U	---			---	- .98	- .54
	L	---			.06	- .19	- .80

FORE FLAP

Orifice Location Percent Chord		STATIONS A	B
0		-1.18	-0.82
1.0	U	-2.55	-1.50
	L	.35	.14
2.0	U	-2.32	-1.29
	L	.46	.06
3.0	U	-2.06	-1.00
	L	.43	.09
4.0	U	-1.47	- .80
	L	.38	---
5.0	U	-1.13	- .76
	L	.30	.03
6.0	U	- .83	.11
	L	---	- .04

MAIN FLAP

Orifice Location Percent Chord		STATIONS A	B
75.0		-0.18	0.11
75.25	U	---	---
	L	---	- .22
75.5	U	- .46	.11
	L	.22	- .10
76.0	U	- .62	- .79
	L	.40	.10
77.5	U	-1.10	- .62
	L	.49	.28
80.0	U	- .78	---
	L	.49	.31
82.5	U	- .58	---
	L	.46	.37
85.0	U	- .44	- .28
	L	.44	.33
90.0	U	- .28	- .18
	L	.40	.28
95.0	U	- .22	- .06
	L	.32	.26

FORE FLAP

Orifice Location Percent Chord		STATIONS A	B
0		-1.08	-0.82
1.0	U	-2.34	-1.51
	L	.36	.24
2.0	U	-2.12	-1.38
	L	.47	.12
3.0	U	-1.86	-1.14
	L	.44	.14
4.0	U	-1.34	- .84
	L	.39	---
5.0	U	-1.04	- .76
	L	.32	.08
6.0	U	- .78	.13
	L	---	- .01

MAIN FLAP

Orifice Location Percent Chord		STATIONS A	B
75.0		-0.15	0.14
75.25	U	---	---
	L	---	- .20
75.5	U	- .42	.16
	L	.22	- .07
76.0	U	- .58	- .80
	L	.40	.13
77.5	U	-1.07	- .69
	L	.48	.32
80.0	U	- .80	---
	L	.48	.34
82.5	U	- .60	---
	L	.44	.40
85.0	U	- .51	- .26
	L	.44	.37
90.0	U	- .36	- .16
	L	.40	.32
95.0	U	- .24	- .02
	L	.30	.30

TABLE VII.- CONCLUDED

SLAT $\alpha = 22.4$

Orifice Location Percent Chord		STATIONS I	A	B	C	D	E
0		-10.80	-2.33	-1.55	-0.99	-0.64	-0.46
0.25	U	-10.60	-2.10	-1.41	- .94	- .60	- .44
	L	-5.48	-2.18	-1.58	- .91	- .60	---
0.5	U	---	-2.06	-1.40	- .93	- .58	- .42
	L	-3.34	-1.58	-1.06	- .77	- .40	- .19
1.0	U	-4.92	---	-1.38	- .92	- .58	- .42
	L	-1.48	---	-1.46	- .23	- .12	0
1.5	U	-3.98	-2.02	---	- .90	- .58	- .42
	L	---	- .43	- .17	- .09	.09	---
2.5	U	-3.32	-2.00	-1.37	- .89	- .58	- .42
	L	- .16	---	.10	.09	.16	.18
3.5	U	-3.18	-2.00	-1.37	- .88	- .58	- .42
	L	.12	- .01	.18	.15	.20	---
5.0	U	-3.10	-2.00	-1.37	- .88	- .58	- .42
	L	.32	.36	.34	.28	.27	.17
7.5	U	-1.91	-2.01	-1.38	- .88	- .58	- .44
	L	---	.44	.34	.29	.30	.28
10.0	U	-1.58	-2.02	-1.38	- .88	- .58	- .44
	L	.43	.44	.01	.26	.34	.28
15.0	U	-1.41	-2.02	-1.37	- .88	- .59	- .44
	L	- .18	- .86	.01	- .02	- .12	- .16
17.5	U	-1.30	---	---	---	---	---
	L	- .94	---	---	---	---	---

SLAT $\alpha = 27.4$

Orifice Location Percent Chord		STATIONS I	A	B	C	D	E
0		-13.9	-1.98	-1.16	-0.79	-0.52	-0.40
0.25	U	-12.5	-1.76	-1.08	- .76	- .49	- .38
	L	-7.66	-2.15	-1.34	- .88	- .54	---
0.5	U	---	-1.71	-1.06	- .73	- .48	- .37
	L	-4.74	-1.65	- .96	- .70	- .46	- .20
1.0	U	-6.66	---	-1.05	- .71	- .47	- .37
	L	-2.19	---	- .44	- .20	- .09	- .02
1.5	U	-6.12	-1.65	---	- .70	- .47	- .37
	L	---	- .52	- .18	- .08	.11	---
2.5	U	-5.42	-1.64	-1.04	- .70	- .47	- .37
	L	- .34	- .09	.08	.11	.18	.19
3.5	U	-5.18	-1.63	-1.04	- .70	- .47	- .37
	L	.06	---	.15	.16	.21	---
5.0	U	-4.78	-1.63	-1.04	- .70	- .47	- .37
	L	.29	.39	.34	.30	.30	.20
7.5	U	-2.87	-1.63	-1.04	- .69	- .47	- .37
	L	---	.47	.35	.31	.34	.31
10.0	U	-2.33	-1.62	-1.04	- .69	- .47	- .37
	L	.49	.48	0	.29	.36	.31
15.0	U	-1.95	-1.62	-1.04	- .69	- .48	- .38
	L	- .33	- .66	0	0	- .04	- .12
17.5	U	-1.82	---	---	---	---	---
	L	-1.32	---	---	---	---	---

WING

Orifice Location Percent Chord		STATIONS I	A	B	C	D	E
5.0	U	-1.64	-1.28	-1.65	-0.80	-0.19	-0.35
6.0	U	---	-1.25	---	- .72	- .36	- .50
	L	.22	.36	.20	.22	.28	.32
7.5	U	-1.61	-2.59	-1.80	-1.09	- .69	- .62
	L	.41	.42	---	.25	.32	.29
10.0	U	-1.54	---	-1.62	-1.05	- .73	- .56
	L	.46	---	.32	.28	---	---
12.5	U	-1.36	-2.15	-1.42	- .97	- .67	- .46
15.0	U	-1.06	-1.86	-1.52	- .92	- .68	- .50
17.5	U	- .93	-2.07	-1.74	-1.38	- .70	- .96
20.0	U	- .98	-1.56	---	- .93	- .64	---
	L	.22	.35	---	.26	.24	.22
30.0	U	- .76	-1.37	-1.33	- .93	- .68	- .46
	L	.43	.33	.32	.23	.19	---
40.0	U	- .68	-1.20	- .97	- .84	- .64	- .47
	L	.39	.32	.30	.20	.15	.08
50.0	U	- .65	---	- .91	- .75	- .58	- .47
	L	.36	.32	.29	.15	.10	.06
60.0	U	- .62	- .72	- .94	- .69	- .41	---
	L	.34	.34	.28	.12	.06	.04
70.0	U	---	- .75	-1.04	- .73	---	- .50
	L	---	.34	.25	.06	.03	- .02
73.0	U	---	---	---	- .76	- .60	- .52
80.0	U	---	- .73	- .69	- .74	- .64	- .56
	L	---	.17	- .06	.07	- .27	- .08
85.0	U	---			- .72	- .76	- .59
	L	---			.05	- .12	- .10
90.0	U	---			- .75	- .95	- .60
	L	---			.05	- .16	- .14
95.0	U	---			---	-1.20	- .60
	L	---			.05	- .26	- .20

WING

Orifice Location Percent Chord		STATIONS I	A	B	C	D	E
5.0	U	-1.83	-1.08	-1.32	-0.64	-0.10	-0.30
6.0	U	---	- .96	---	- .56	- .26	- .44
	L	.18	.37	.22	.24	.31	.34
7.5	U	-1.99	-2.08	-1.40	- .88	- .57	- .56
	L	.41	.44	---	.27	.34	.37
10.0	U	-2.02	---	-1.26	- .84	- .59	- .50
	L	.49	---	.34	.29	---	---
12.5	U	-1.87	-1.82	-1.15	- .78	- .55	- .40
15.0	U	-1.50	-1.64	-1.22	- .75	- .58	- .45
17.5	U	-1.38	-2.16	-1.34	-1.14	- .60	- .90
20.0	U	-1.47	-1.58	---	- .77	- .55	---
	L	.26	.40	---	.29	.26	.24
30.0	U	-1.07	-1.24	-1.15	- .78	- .62	- .44
	L	.50	.39	.34	.24	.21	---
40.0	U	- .93	-1.15	- .88	- .73	- .62	- .49
	L	.46	.39	.32	.20	.16	.12
50.0	U	- .87	---	- .81	- .65	- .57	- .52
	L	.43	.37	.30	.14	.10	.08
60.0	U	- .78	-1.06	- .76	- .64	- .38	---
	L	.40	.37	.28	.10	.06	.06
70.0	U	---	-1.02	- .78	- .66	---	- .53
	L	---	.35	.25	0	.01	- .02
73.0	U	---	---	---	- .66	- .55	- .54
80.0	U	---	- .89	- .77	- .66	- .58	- .56
	L	---	.19	- .08	- .02	- .28	- .08
85.0	U	---			- .64	- .54	- .56
	L	---			.06	- .19	- .12
90.0	U	---			- .66	- .70	- .56
	L	---			.06	- .24	- .16
95.0	U	---			---	- .60	- .56
	L	---			.06	- .34	- .22

FORE FLAP

Orifice Location Percent Chord		STATIONS A	B
0		-0.89	-0.66
1.0	U	-1.98	-1.09
	L	.40	.05
2.0	U	-1.74	-1.01
	L	.49	.10
3.0	U	-1.52	- .84
	L	.46	.10
4.0	U	-1.11	- .67
	L	.40	---
5.0	U	- .90	- .60
	L	.33	0
6.0	U	- .70	.12
	L	---	- .04

MAIN FLAP

Orifice Location Percent Chord		STATIONS A	B
75.0		-0.09	0.14
75.25	U	---	---
	L	---	- .16
75.5	U	.37	.16
	L	.26	- .03
76.0	U	- .53	- .66
	L	.43	.16
77.5	U	-1.04	- .55
	L	.51	.30
80.0	U	- .74	---
	L	.51	.32
82.5	U	- .57	---
	L	.49	.39
85.0	U	- .50	- .30
	L	.47	.38
90.0	U	- .40	- .26
	L	.44	.29
95.0	U	- .26	- .15
	L	.35	.28

FORE FLAP

Orifice Location Percent Chord		STATIONS A	B
0		-0.93	-0.93
1.0	U	-2.04	-1.30
	L	.41	.27
2.0	U	-1.76	-1.13
	L	.48	.12
3.0	U	-1.53	-1.12
	L	.44	.13
4.0	U	-1.16	-1.07
	L	.40	---
5.0	U	- .96	- .98
	L	.32	.06
6.0	U	- .78	.12
	L	---	- .02

MAIN FLAP

Orifice Location Percent Chord		STATIONS A	B
75.0		-0.13	0.14
75.25	U	---	---
	L	---	- .26
75.5	U	- .43	.14
	L	.24	- .14
76.0	U	- .60	- .90
	L	.40	.10
77.5	U	-1.12	- .86
	L	.50	.30
80.0	U	- .81	---
	L	.50	.34
82.5	U	- .64	---
	L	.48	.39
85.0	U	- .56	- .54
	L	.46	.34
90.0	U	- .46	- .49
	L	.43	.28
95.0	U	- .34	- .39
	L	.34	.24

NACA

[redacted]

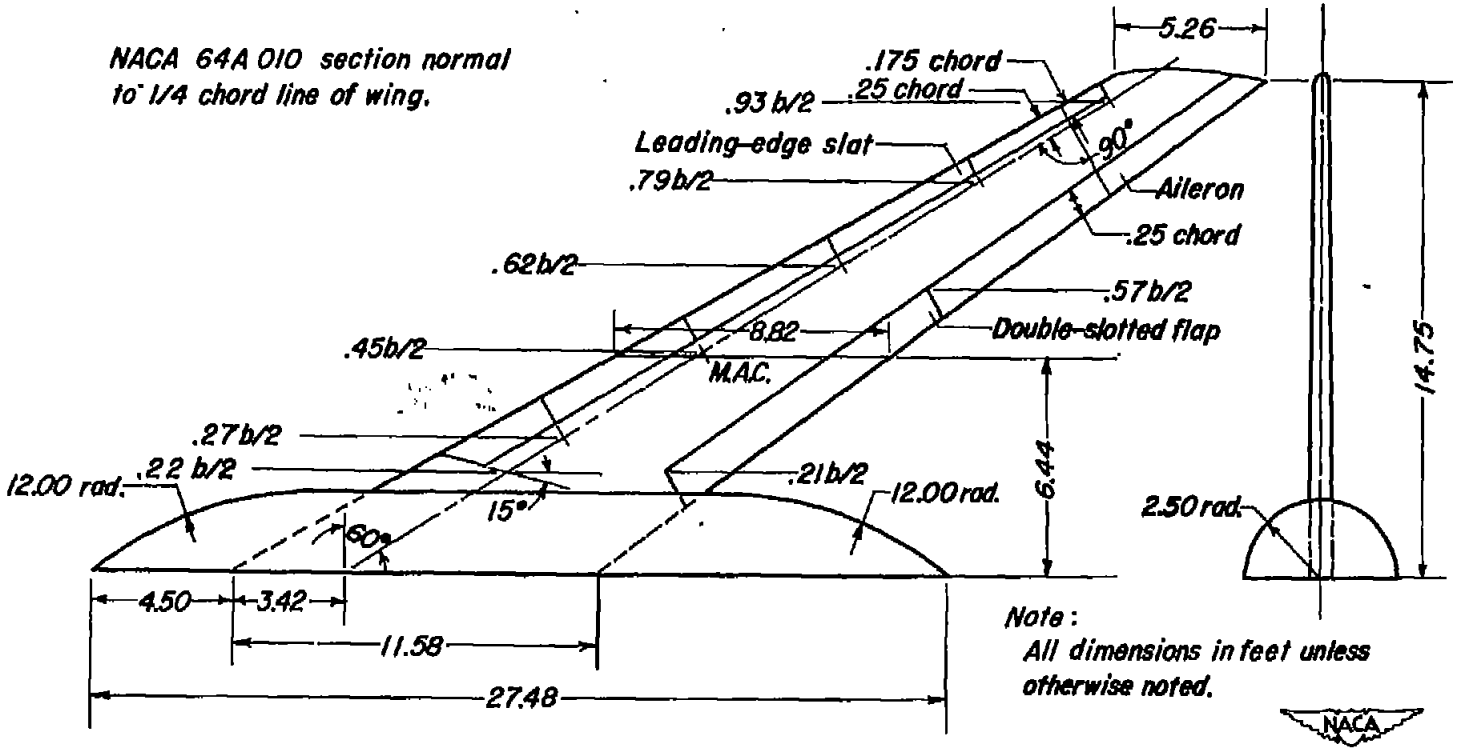

Figure 1.—Geometric characteristics of the 60° swept-back semispan wing and fuselage.

[redacted]

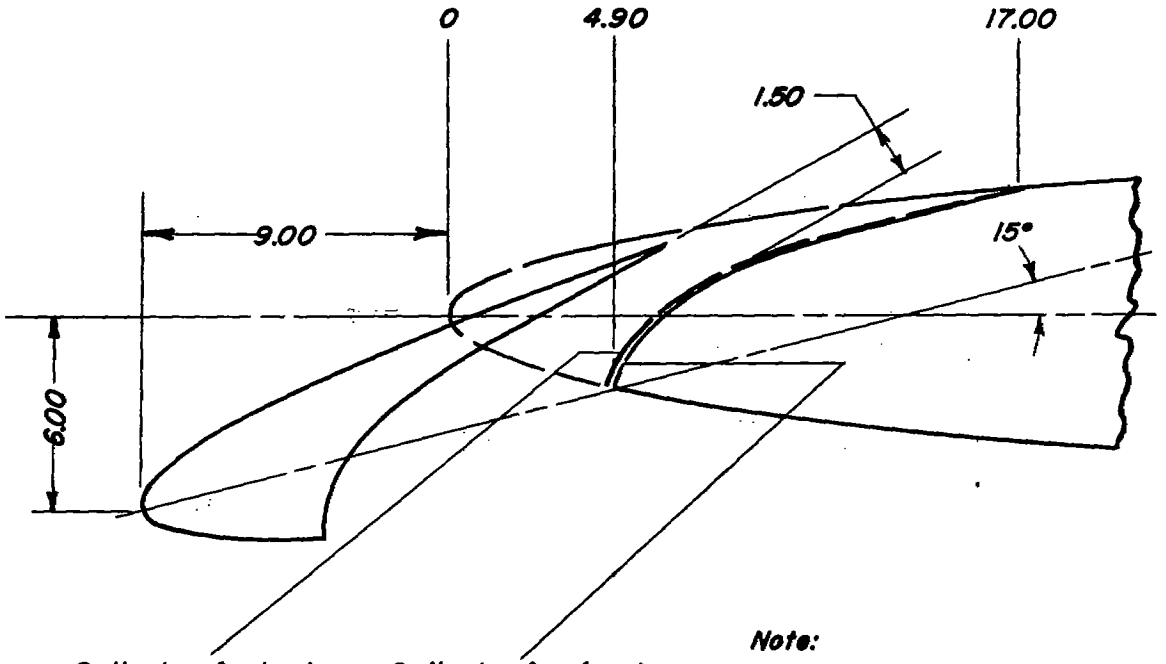

Ordinates for back of slat, percent wing chord

Station	Ordinate
4.68	−2.26
5.0	−1.36
5.5	−.56
6.0	−.02
7.5	1.05
10.0	2.11
15.0	3.46
17.0	3.95

Ordinates for front of main wing, percent wing chord

Station	Ordinates
4.9	−2.30
5.0	−1.87
5.5	−.83
6.0	−.24
7.5	.91
10.0	2.04
15.0	3.44
17.0	3.95

Note:
All dimensions are given in percent of wing chord normal to wing 1/4 chord line.

Figure 2.—Details of the leading-edge slats.

[redacted]

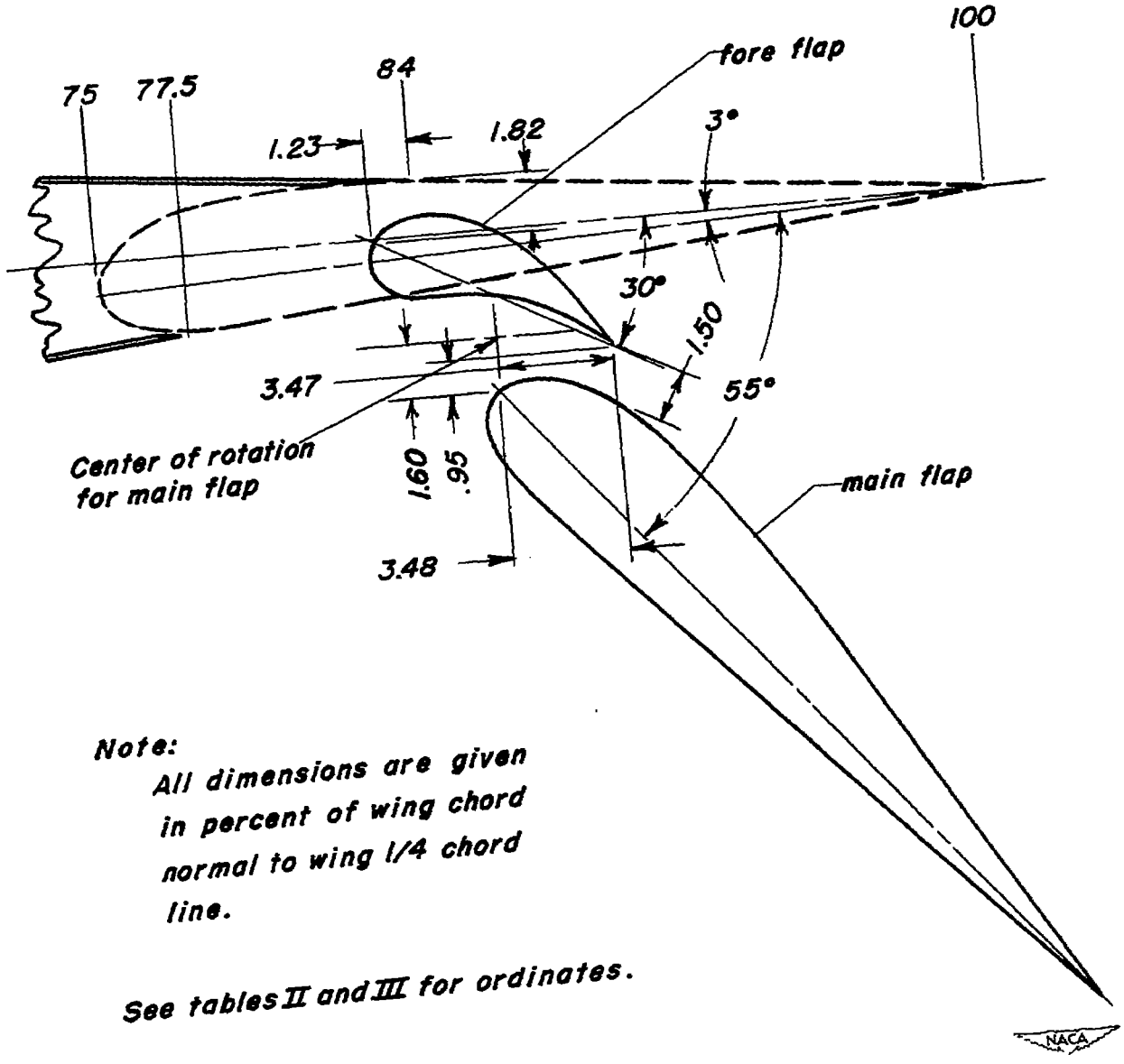

Note:
All dimensions are given in percent of wing chord normal to wing 1/4 chord line.

See tables II and III for ordinates.

Figure 3.—Details of the double-slotted flap.

[redacted]

[redacted]

Station	2y/b
1	0.25
A	0.43
B	0.57
C	0.71
D	0.81
E	0.90

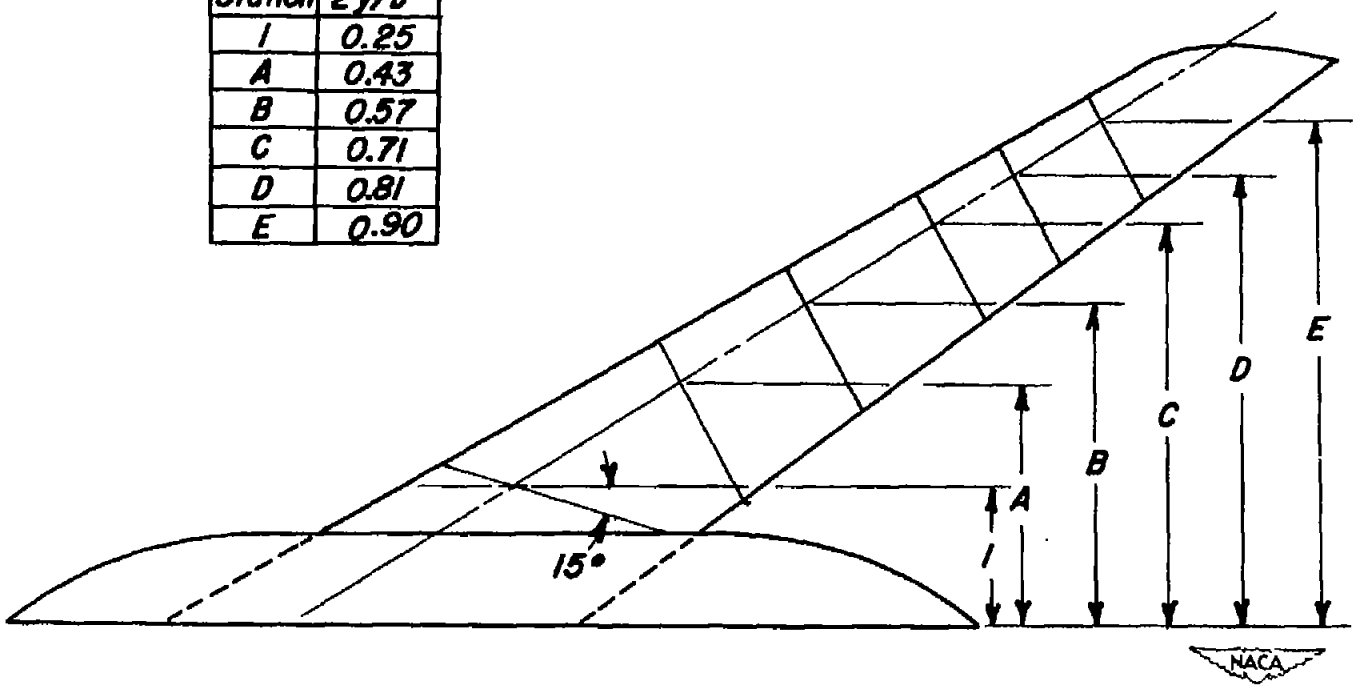

Figure 4.—Spanwise position of orifices.

[redacted]

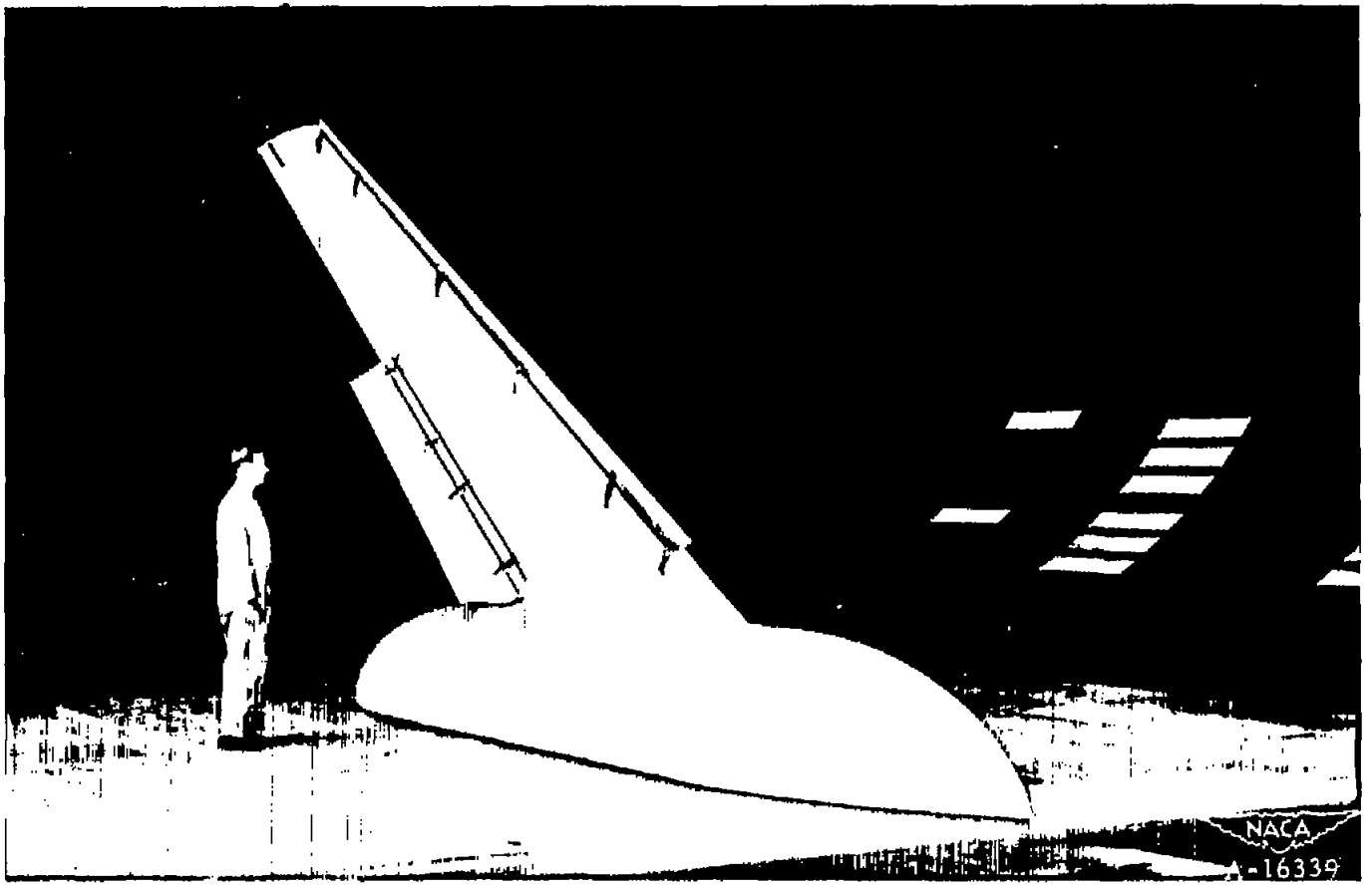

Figure 5.– The semispan model of the 60° swept-back wing installed in the Ames 40- by 80-foot wind tunnel.

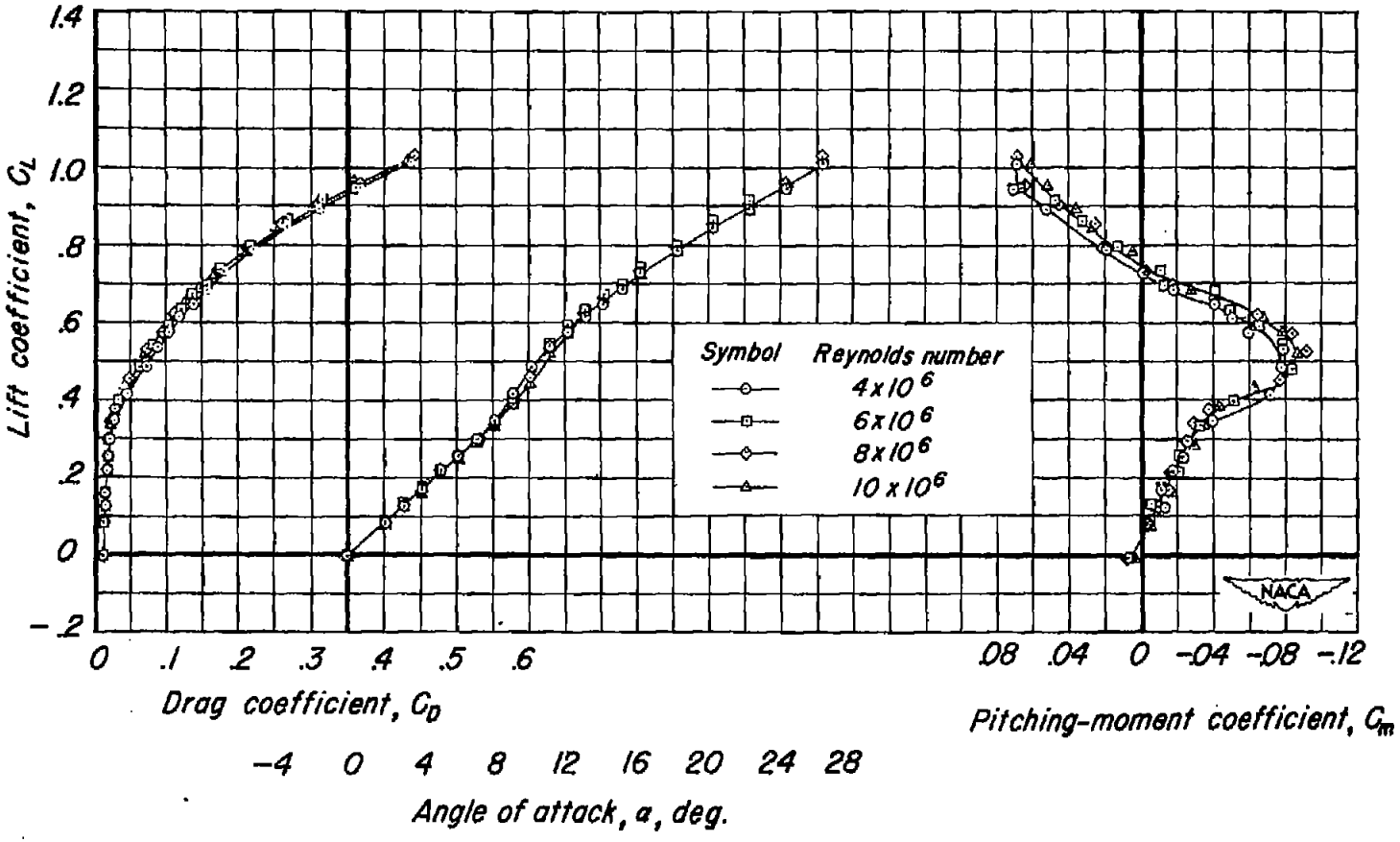

Figure 6.– Longitudinal characteristics of the 60° swept-back wing at various Reynolds numbers.

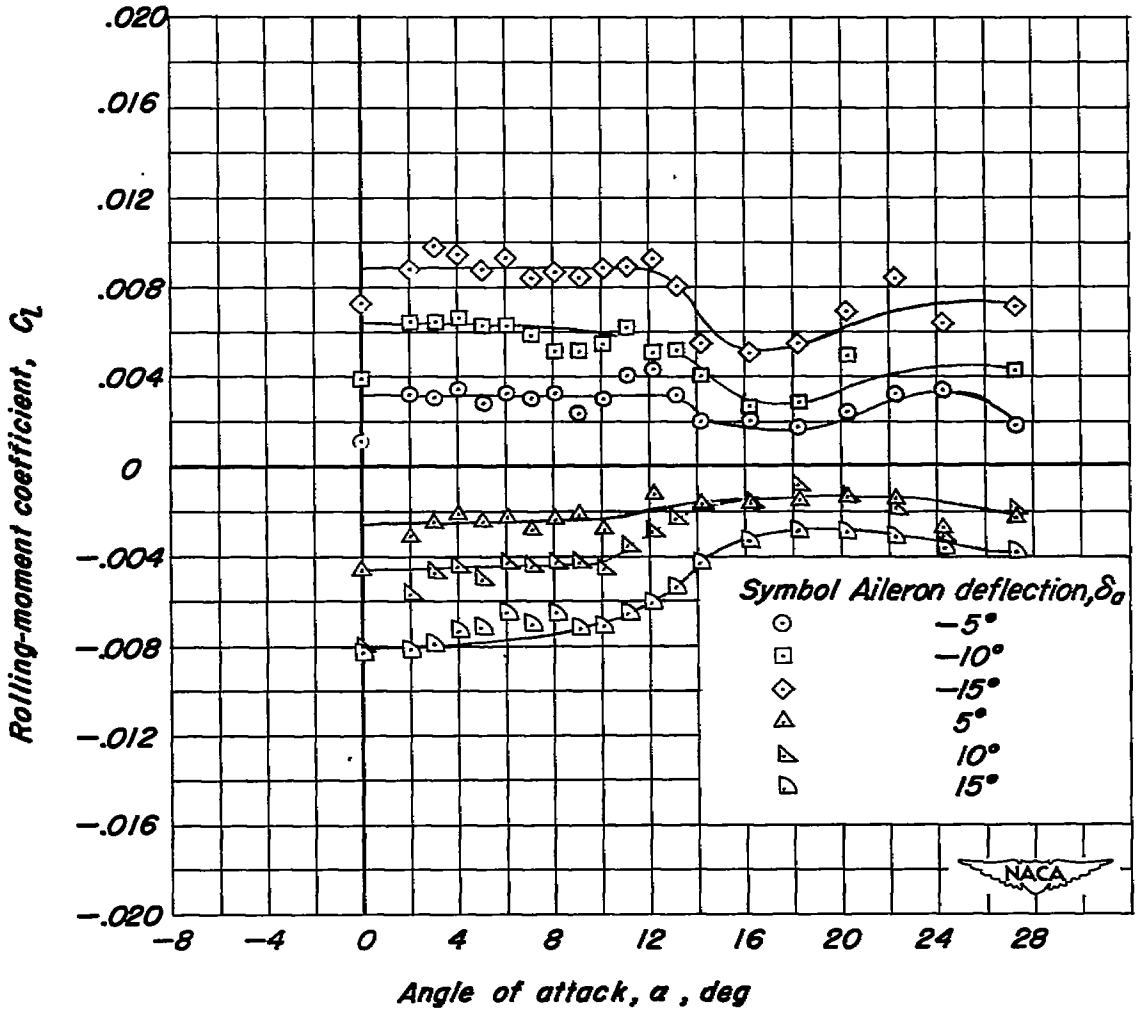

Figure 7.—Variation of rolling-moment coefficient with angle of attack and aileron deflection for the 60° swept-back wing. R=8.0X10⁶.

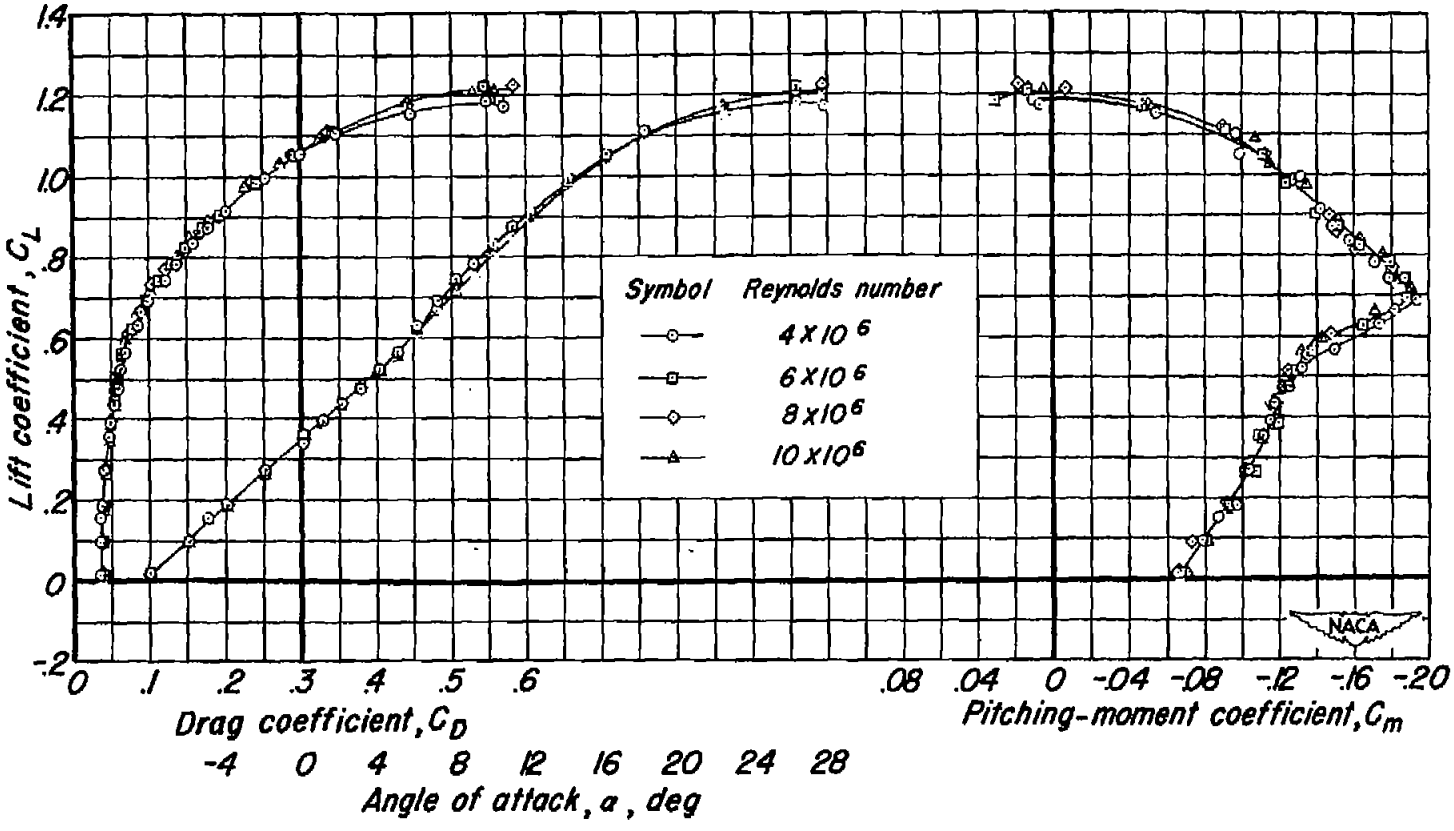

Figure 8.- Longitudinal characteristics of the 60° swept-back wing with double-slotted flaps deflected 55° at various Reynolds numbers.

[redacted]

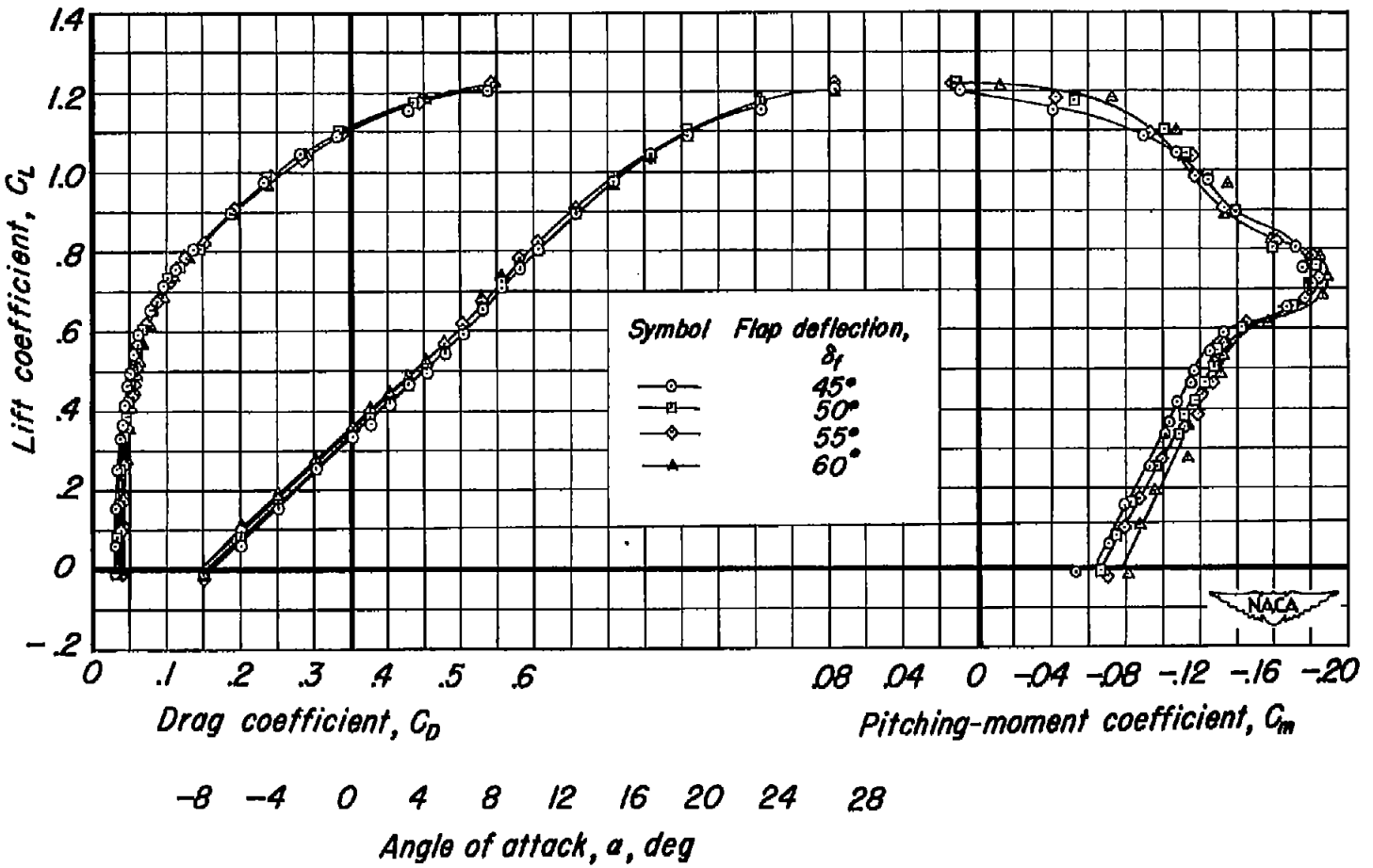

Figure 9.- Longitudinal characteristics of the 60° swept-back wing equipped with double-slotted flaps for various flap deflections. $R = 8.0 \times 10^6$.

[redacted]

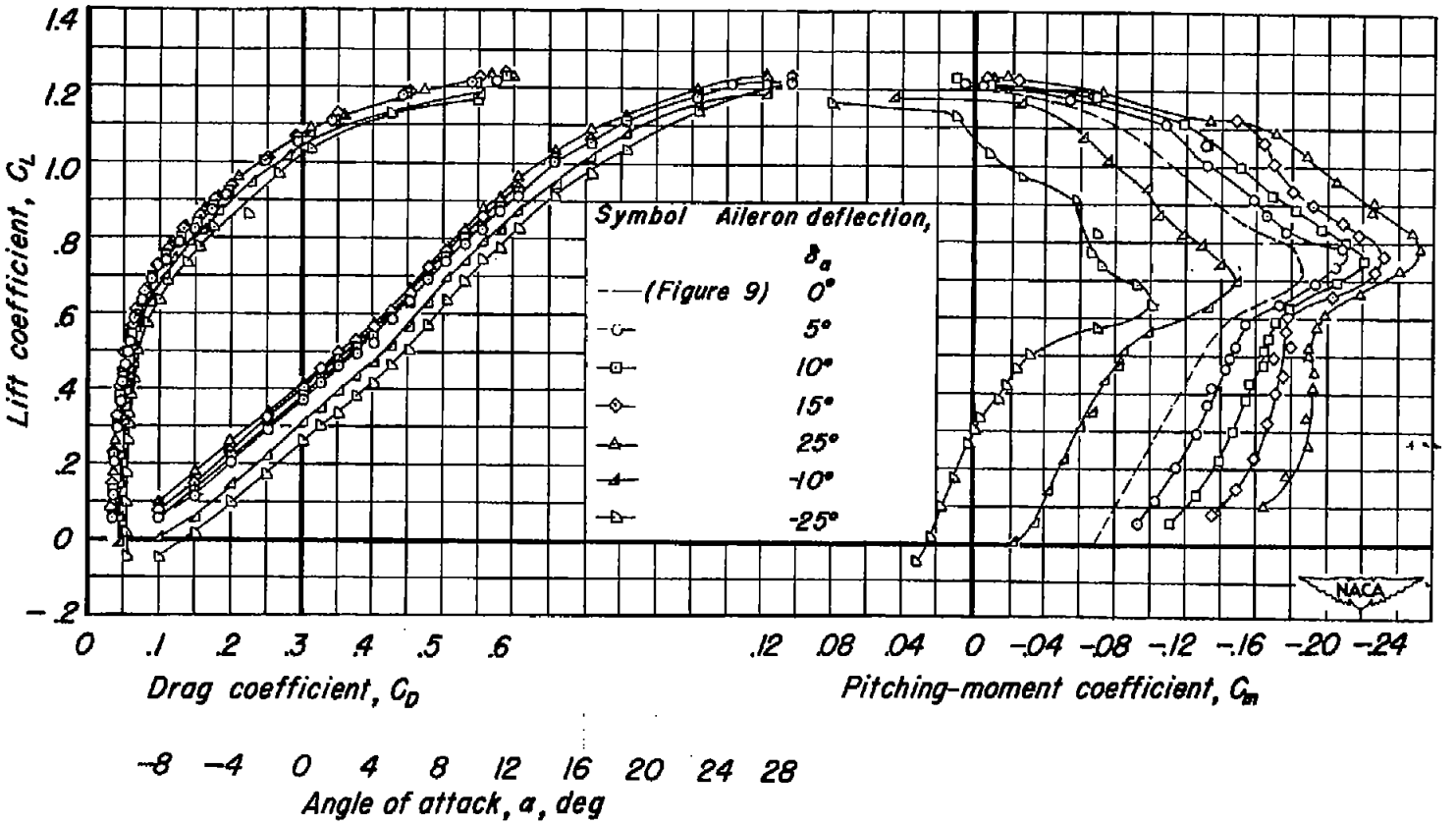

Figure 10.- Longitudinal characteristics of the 60° swept-back wing with double-slotted flaps deflected 55° and with various aileron deflections. $R = 8.0 \times 10^6$.

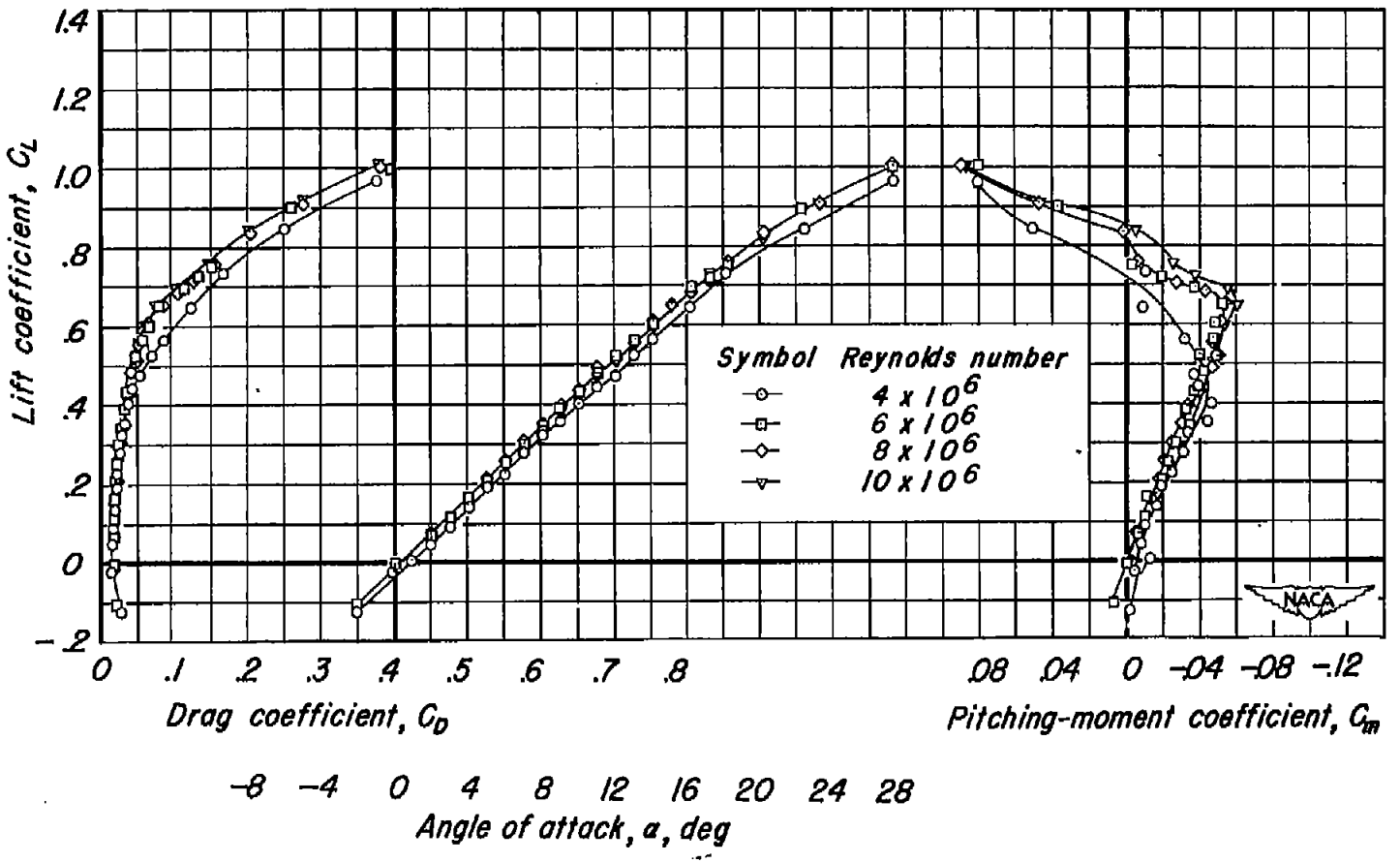

Figure 11.- Longitudinal characteristics of the 60° swept-back wing with all slats extended at various Reynolds numbers.

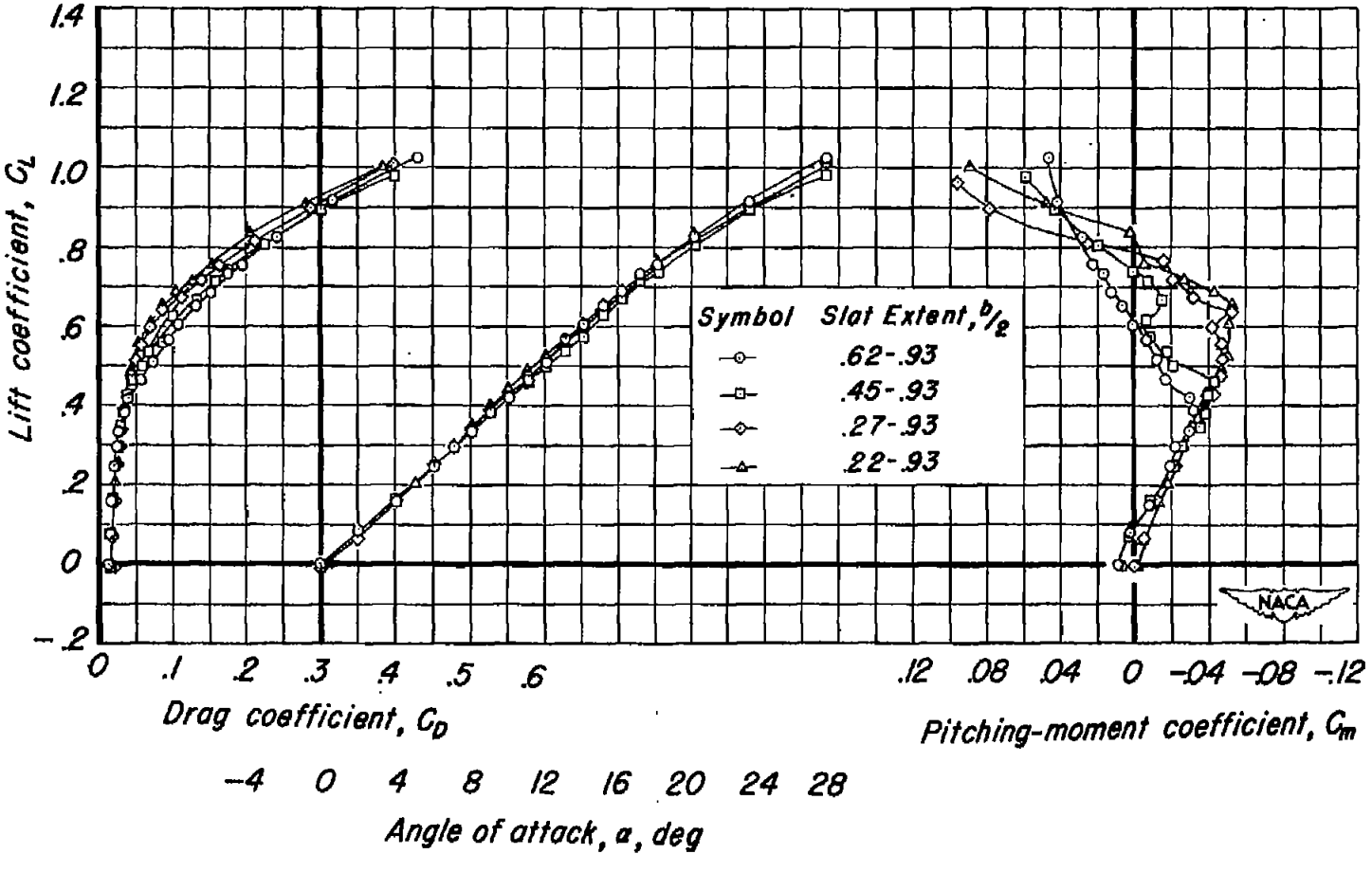

Figure 12.- Longitudinal characteristics of the 60° swept-back wing with various spanwise extents of leading-edge slats. $R = 8.0 \times 10^6$.

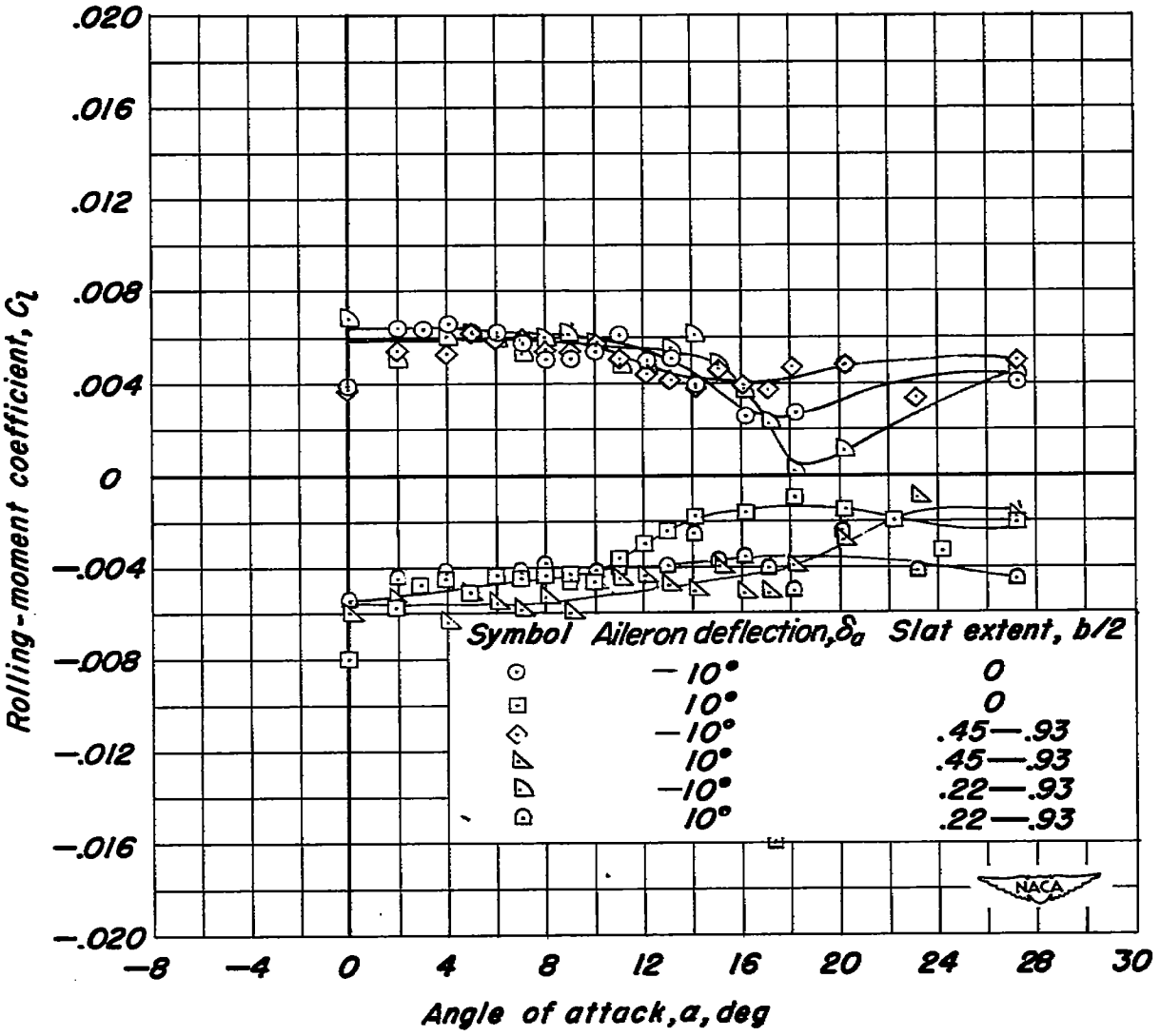

Figure 13.—Variation of rolling-moment coefficient with angle of attack for the 60° swept-back wing with aileron deflections of ±10° and with various spanwise extents of leading-edge slats. R=8.0X10⁶.

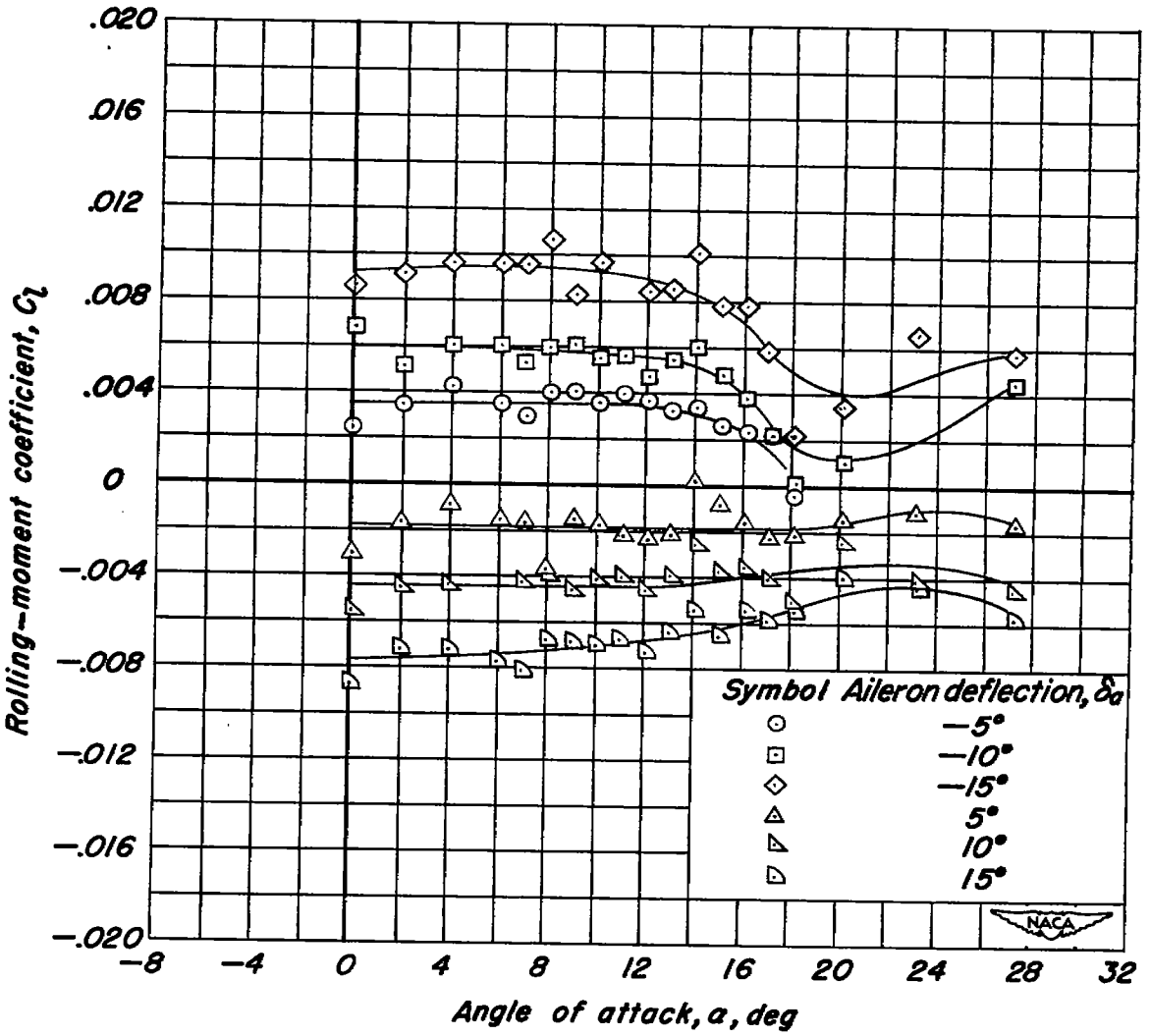

Figure 14.—Variation of rolling-moment coefficient with angle of attack and aileron deflection for the 60° swept-back wing with all the leading edge slats extended. $R=8.0\times10^6$.

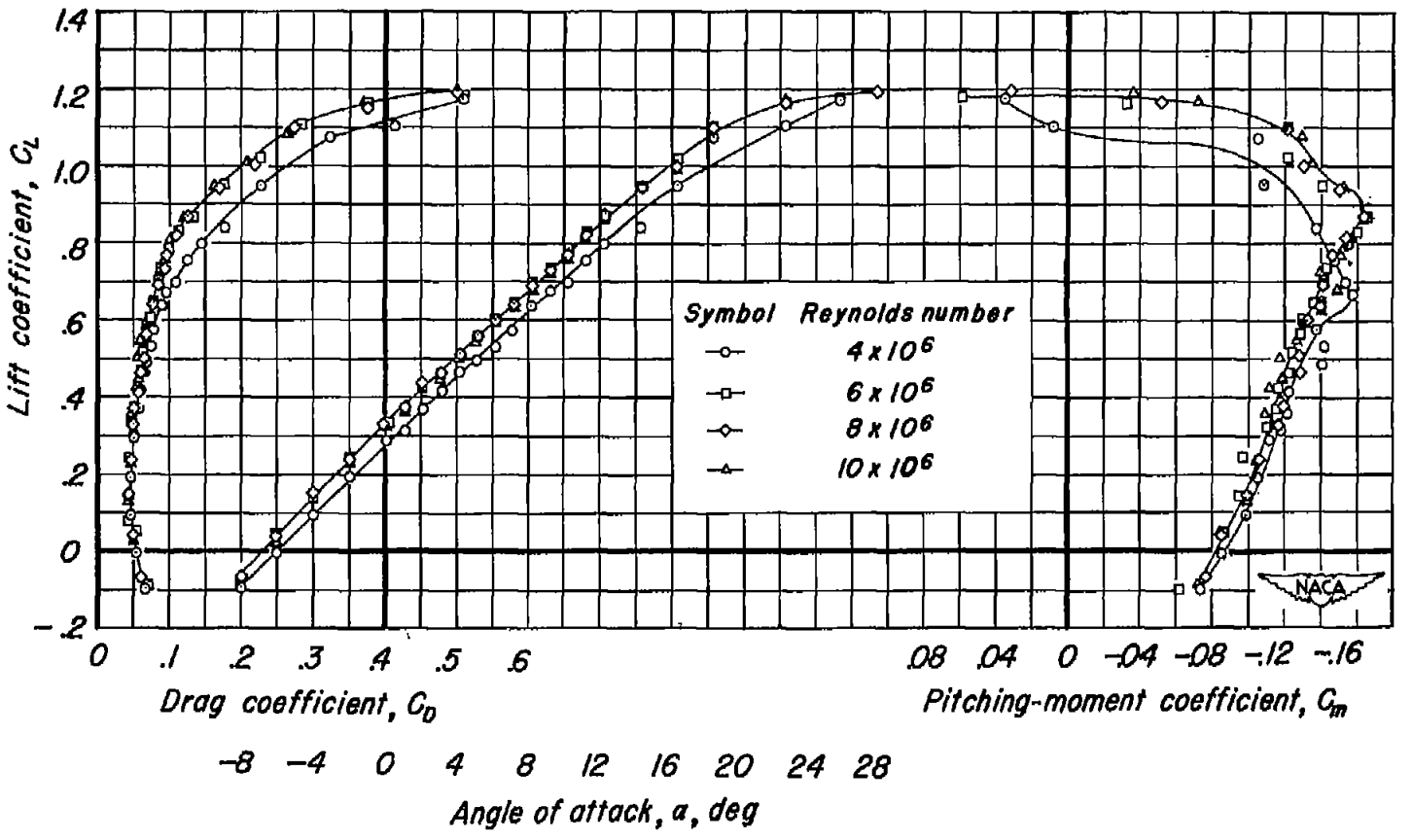

Figure 15.– Longitudinal characteristics of the 60° swept-back wing with all the leading-edge slats extended and with the double-slotted flaps deflected 55° at various Reynolds numbers.

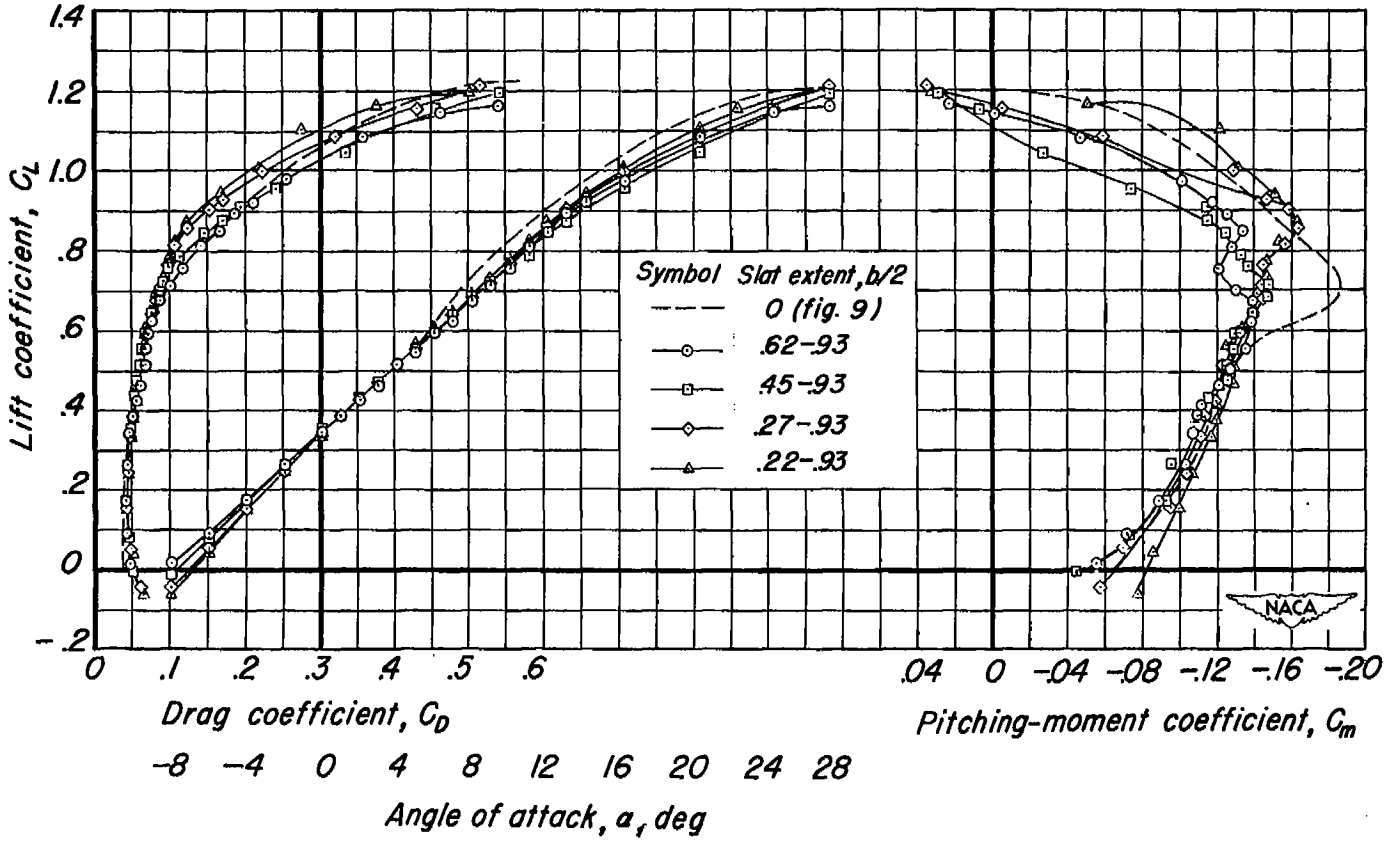

Figure 16.- Longitudinal characteristics of the 60° swept-back wing with the double-slotted flap deflected 55° and with various spanwise extents of leading-edge slats. $R = 8.0 \times 10^6$

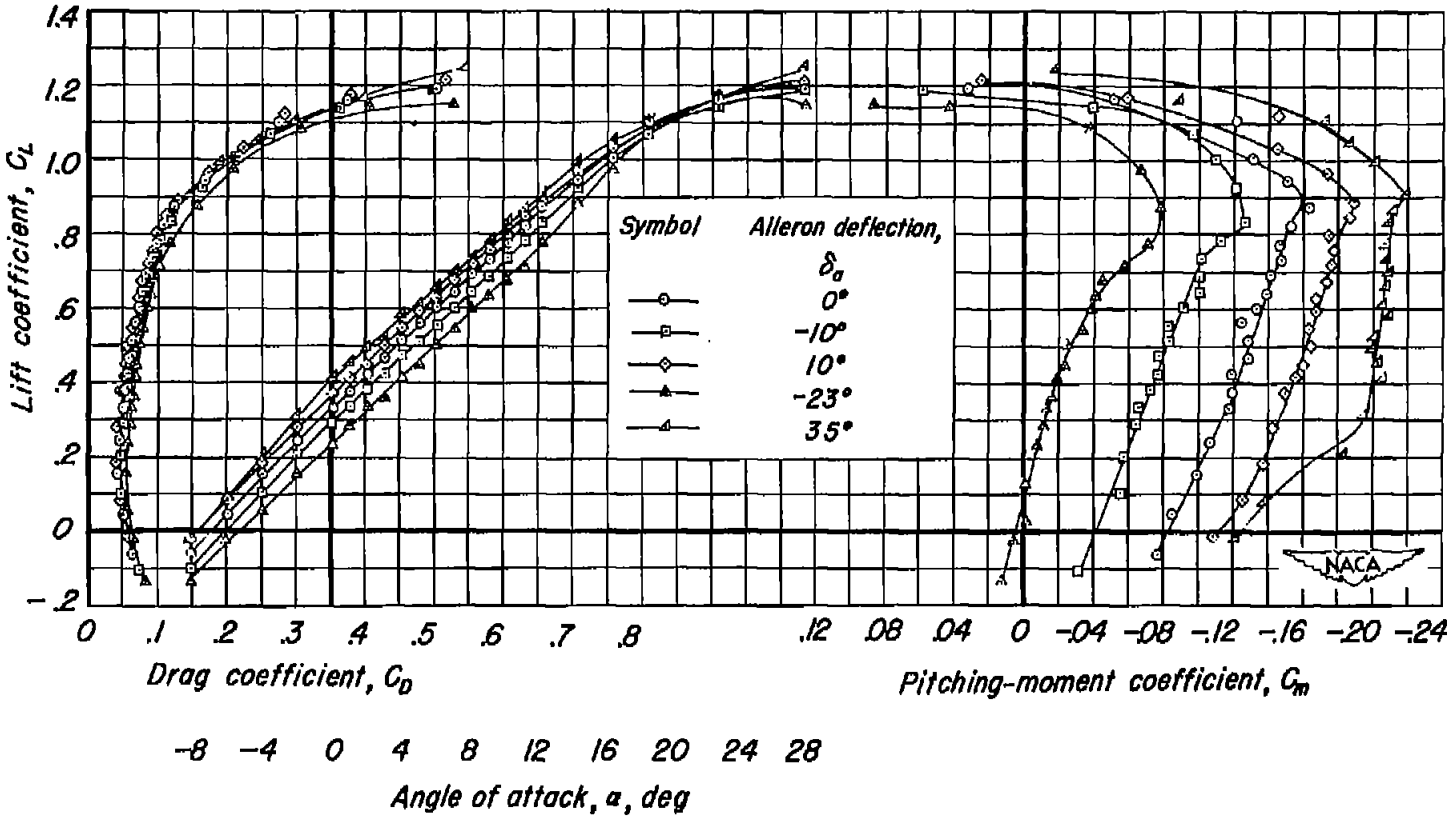

Figure 17.- Longitudinal characteristics of the 60° swept-back wing with all the leading-edge slats extended and with double-slotted flaps deflected 55° and for various aileron deflections. $R = 8.0 \times 10^6$.

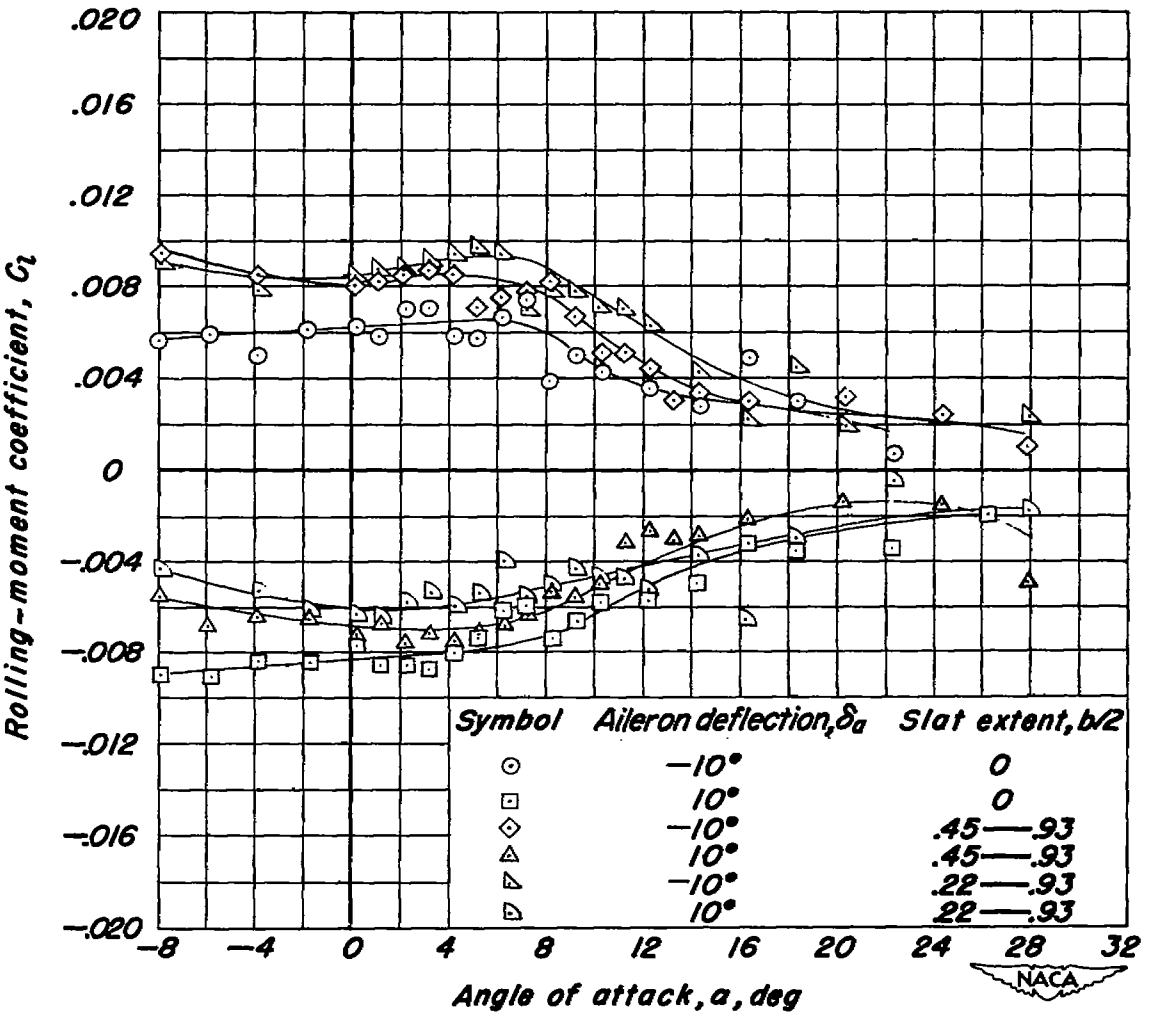

Figure 18.—Variation of rolling-moment coefficient with angle of attack for the 60° swept-back wing with double-slotted flaps and various spanwise extents of leading-edge slats for aileron deflections of ±10°. $R=8.0\times10^6$.

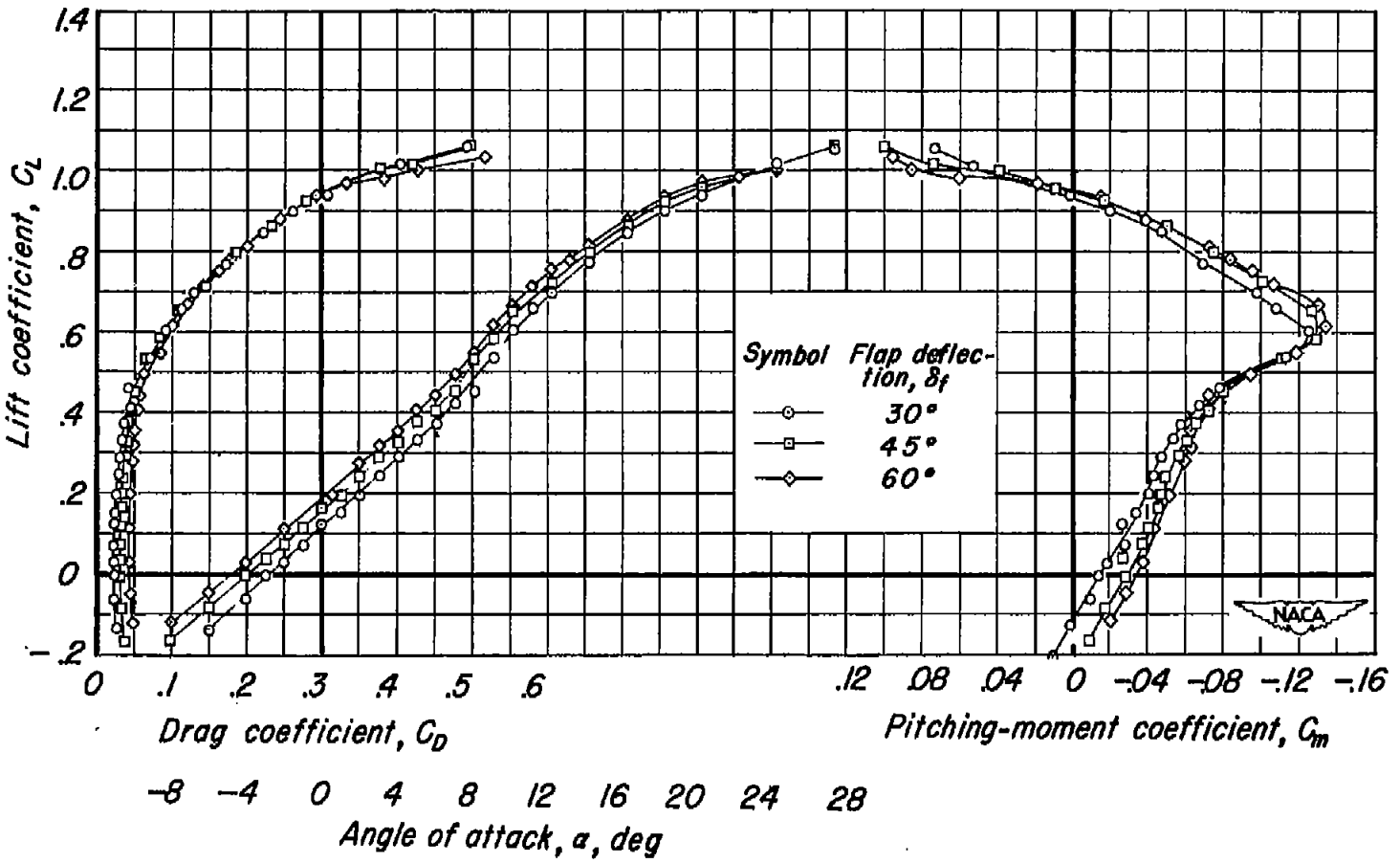

Figure 19.- Longitudinal characteristics of the 60° swept-back wing for various deflections of a split flap.

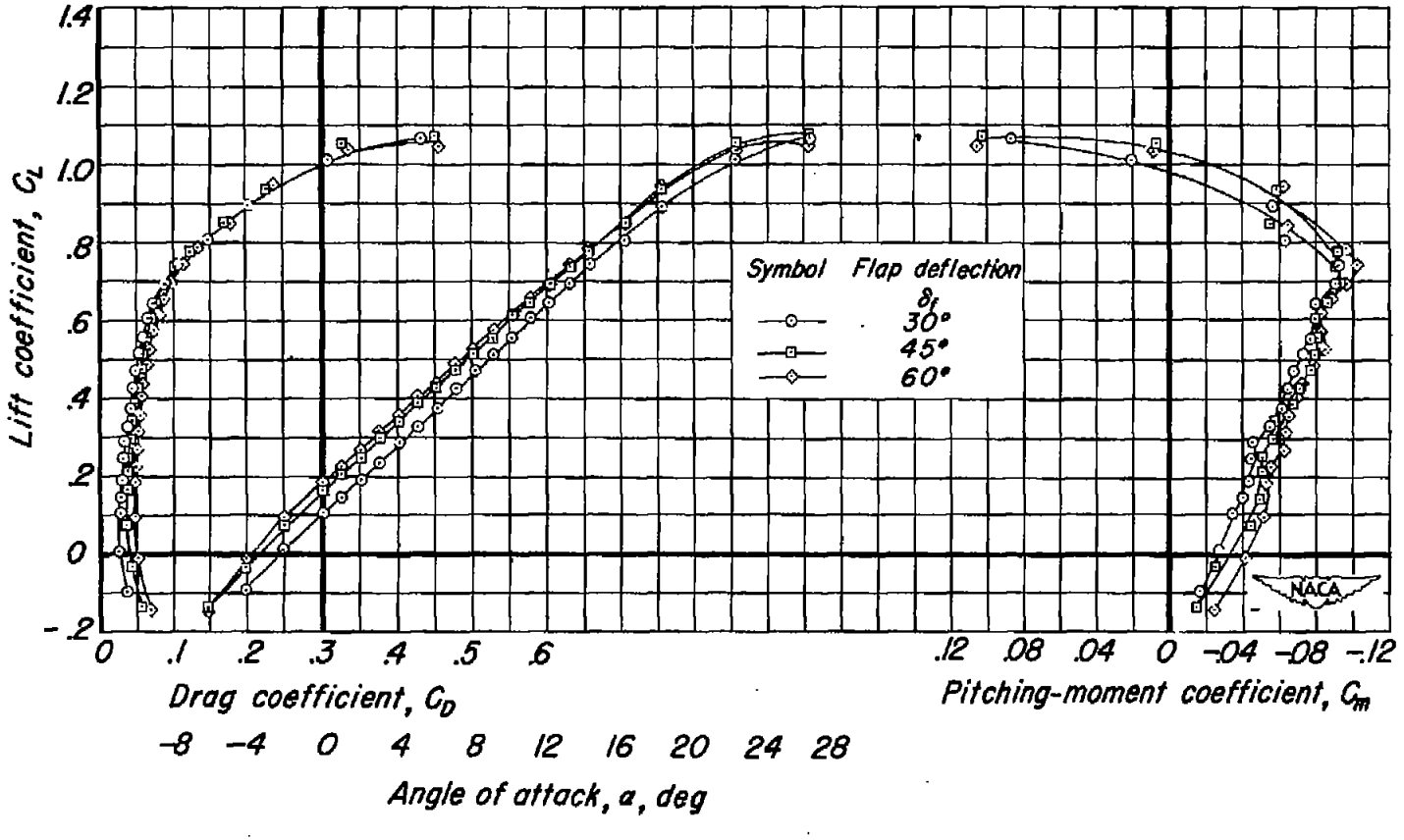

Figure 20.- Longitudinal characteristics of the 60° swept-back wing with all the leading-edge slats extended and with various deflections of a split flap. $R = 8.0 \times 10^6$.

[redacted]

LANGLEY RESEARCH CENTER
3 1176 01316 3556

[redacted]