SECURITY INFORMATION

CONFIDENTIAL

Copy
RM E51K15

NACA RM E51K15
E 51 K 15
53-30-28

TECH LIBRARY KAFB, NM
0143232

NACA

RESEARCH MEMORANDUM

COMPARISON OF LOCKED-ROTOR AND WINDMILLING DRAG CHARACTERISTICS OF AN AXIAL-FLOW-COMPRESSOR TYPE TURBOJET ENGINE

By K. R. Vincent, S. C. Huntley, and H. D. Wilsted

Lewis Flight Propulsion Laboratory
Cleveland, Ohio

[redacted] DOCUMENT

This material contains information affecting the National Defense of the United States within the meaning of the [redacted], Title 18, U.S.C., Secs. 793 and 794, the transmission or revelation of which in any [redacted] to unauthorized person is prohibited by law.

NATIONAL ADVISORY COMMITTEE
FOR AERONAUTICS
WASHINGTON
January 17, 1952

CONFIDENTIAL

6712

TECH LIBRARY KAFB, NM
0143232

NATIONAL ADVISORY COMMITTEE FOR AERONAUTICS

RESEARCH MEMORANDUM

COMPARISON OF LOCKED-ROTOR AND WINDMILLING DRAG CHARACTERISTICS OF AN AXIAL-FLOW-COMPRESSOR TYPE TURBOJET ENGINE

By K. R. Vincent, S. C. Huntley
and H. D. Wilsted

240

SUMMARY

The internal drag of an axial-flow turbojet engine with the rotor locked in place to prevent windmilling and with the engine windmilling was obtained in an altitude test chamber over a range of simulated flight Mach number from about 0.3 to 0.8 at an altitude of 5000 feet. The internal drag (corrected to sea-level conditions) of the engine with the locked rotor was about 200 pounds, or only 44 percent of the windmilling drag, at a flight Mach number of 0.8, and was about 30 pounds, or 41 percent of the windmilling drag, at a flight Mach number of 0.30. In addition to these drag reductions, the air flow with the rotor locked was approximately 33 percent of that with the engine windmilling.

INTRODUCTION

In order to evaluate the characteristics and hazards associated with the operation of turbojet aircraft, there should be known, in addition to engine performance characteristics, the internal drag characteristics when the engine is inoperative. For example, an aircraft may carry inoperative turbojet engines because of engine damage or for reserve power for high-speed flight. To minimize the drag of such inoperative engines would be desirable, of course. The drag of the engine installation, consisting of both the internal and external aerodynamic drag, may differ depending on whether the engine is windmilling, the rotor is locked in position, or air flow through the engine is completely blocked by an air inlet door. For no air flow through the engine, the internal drag would of course be zero. However, an increase in spillage or air flow out over the surfaces of the inlet diffuser and the external aerodynamic surfaces may greatly increase the external aircraft drag.

Windmilling drag characteristics of two axial-flow engines were determined in previous investigations, and are reported in references 1 and 2. Reference 3 contains a generalization of windmilling characteristics for several turbojet and turbine-propeller engines. In the investigation made at the NACA Lewis laboratory and reported herein, the internal drag and

air flow were determined for an axial-flow engine with the rotor assembly locked in place to prevent rotation. This drag was then compared with the internal drag for the engine windmilling. This investigation was conducted at a simulated altitude of 5000 feet over a range of flight Mach number from about 0.3 to 0.8.

APPARATUS

2440

Engine

A conventional axial-flow turbojet engine was used for this investigation. The engine had an eleven-stage axial-flow compressor, a double annular combustor, and a two-stage turbine. Rated thrust of the engine at static sea-level conditions was approximately 3000 pounds at an engine speed of 12,500 rpm. The engine had a frontal area of slightly over $3\frac{1}{2}$ square feet.

For part of this investigation, the engine rotor was locked to prevent rotation by inserting a metal strap that was fixed at one end to the upstream flange of the tail cone and at the other end to the bolts on the turbine wheel. The strap was twisted so as to present a minimum frontal area to the flow. The engine was instrumented with pressure and temperature survey rakes at the inlet and outlet of each component throughout the engine.

Altitude Facilities

The engine was installed in an altitude chamber which is illustrated in figure 1. The chamber is 10 feet in diameter and 60 feet in length and is divided into three compartments by steel bulkheads; the inlet section, the engine compartment, and the exhaust section. The engine was mounted in the engine compartment, with the tail pipe extending through the rear bulkhead into the exhaust section.

Dry refrigerated air can be supplied to the inlet section of the altitude chamber at temperatures from -70° to 0° F. Dry combustion air may also be obtained at a temperature of 65° F. Control of the inlet air temperature is obtained by mixing these two supplies. The gases discharged from the exhaust nozzle of the engine are removed from the exhaust section of the altitude chamber through a diffusing elbow and coolers by means of the laboratory exhausters.

3440

PROCEDURE

The desired flight conditions were set to correspond to NACA standard atmospheric conditions assuming 100 percent ram pressure recovery. These settings were accomplished by adjusting the stagnation or total pressure and temperature in the inlet section of the altitude chamber to correspond to the particular flight condition being investigated. Simultaneously the static pressure corresponding to the simulated altitude was maintained in the exhaust section. All data included herein were obtained at a simulated altitude of 5000 feet at flight Mach numbers from about 0.3 to 0.8. After each flight condition was established and the air flow or engine speed stabilized, the pressures and temperatures throughout the engine flow system were recorded.

Air flow was computed from pressure and temperature measurements at the engine inlet. The internal drag was computed as the difference between the free-stream momentum of the engine air, based on complete ram recovery at the engine inlet, and the momentum at the exhaust-nozzle outlet, determined from the exhaust-nozzle pressure and temperature survey.

RESULTS AND DISCUSSION

Corrected drag, corrected air flow, and corrected component pressures, which are plotted as functions of flight Mach number in figures 2 to 4, have been generalized by means of the conventional correction factors δ and θ. The factor δ is defined as the ratio of free-stream static pressure to standard sea-level static pressure, and θ is defined as the ratio of free-stream static temperature to sea-level standard temperature. Presenting the generalized data in this manner gives values equal to the actual drag and air flow at standard sea-level conditions.

The corrected drag with the engine windmilling and that with the rotor locked are compared in figure 2 for a range of flight Mach number. Over the range of flight Mach number investigated, the drag of the locked-rotor engine was less than half that of the windmilling engine. At a flight Mach number of 0.3, which is in or slightly above the region of take-off speeds, the drag of the locked-rotor engine was 30 pounds, which was only about 41 percent of that for the windmilling engine. At a flight Mach number of 0.8, the drag of the locked-rotor engine had risen to 200 pounds, but was still only 44 percent of that for the windmilling engine. In terms of drag per square foot of frontal area of the engine, the 200 pounds drag represent approximately 5.6 pounds per square foot.

The primary reason for the lower drag with the locked-rotor engine is the lower air flow shown in figure 3. The corrected air flow for the

locked-rotor engine was about 33 percent that of the windmilling engine throughout the range of flight Mach number investigated. However, the total pressure at the exhaust nozzle of the windmilling engine was slightly above free-stream static pressure, whereas the exhaust nozzle total and static pressures were essentially equal for the locked-rotor engine (see fig. 4). Consequently, a small amount of the free-stream momentum of the air was recovered at the exhaust-nozzle outlet of the windmilling engine, in most cases about one-third of the free-stream momentum, whereas essentially all the free-stream momentum was absorbed within the locked-rotor engine.

It is evident from these data that the considerably higher free-stream momentum for the windmilling engine, due to the higher air flow, is the factor which results in the much higher internal drag of the windmilling engine. This effect is tempered to a small degree by the momentum recovered in the exhaust nozzle of the windmilling engine.

SUMMARY OF RESULTS

Comparison of the experimentally determined locked-rotor and windmilling characteristics of an axial-flow turbojet engine showed the following results:

1. The internal drag of the locked-rotor engine was considerably less than that of the windmilling engine. At sea-level conditions and a flight Mach number of 0.3, the internal drag of the locked-rotor engine was 30 pounds and at 0.8 Mach number was 200 pounds, amounting to 41 and 44 percent, respectively, of the drag of the windmilling engine.

2. Throughout the range of flight Mach number investigated, the corrected air flow for the locked-rotor engine was approximately 33 percent of that for the windmilling engine.

Lewis Flight Propulsion Laboratory
National Advisory Committee for Aeronautics
Cleveland, Ohio

REFERENCES

1. Meyer, Carl L., and Bloomer, Harry E.: Altitude-Wind-Tunnel Investigation of Performance and Windmilling Drag Characteristics of Westinghouse X24C-4B Axial-Flow Turbojet Engine. NACA RM E8J25a, 1948.

2. Wilsted, H. D., and Armstrong, J. C.: Effect of Fuel Volatility on Altitude Starting Limits of a Turbojet Engine. NACA RM E50G10, 1950.

3. Wallner, Lewis E., and Welna, Henry J.: Generalization of Turbojet and Turbine-Propeller Engine Performance in Windmilling Condition. NACA RM E51J23, 1951.

2440

CONFIDENTIAL

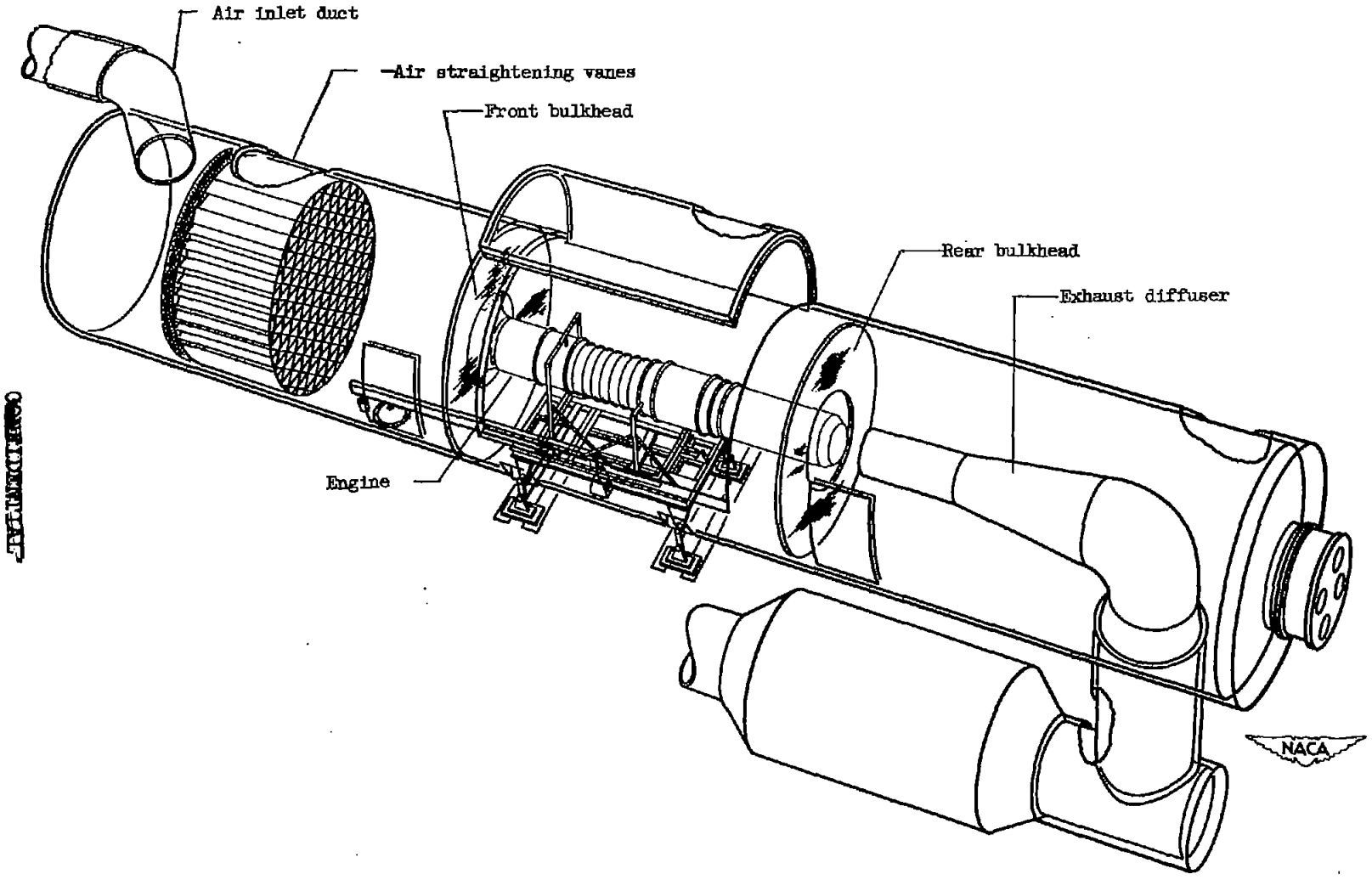

Figure 1. - Altitude chamber with turbojet engine installed in test section.

CONFIDENTIAL

CONFIDENTIAL

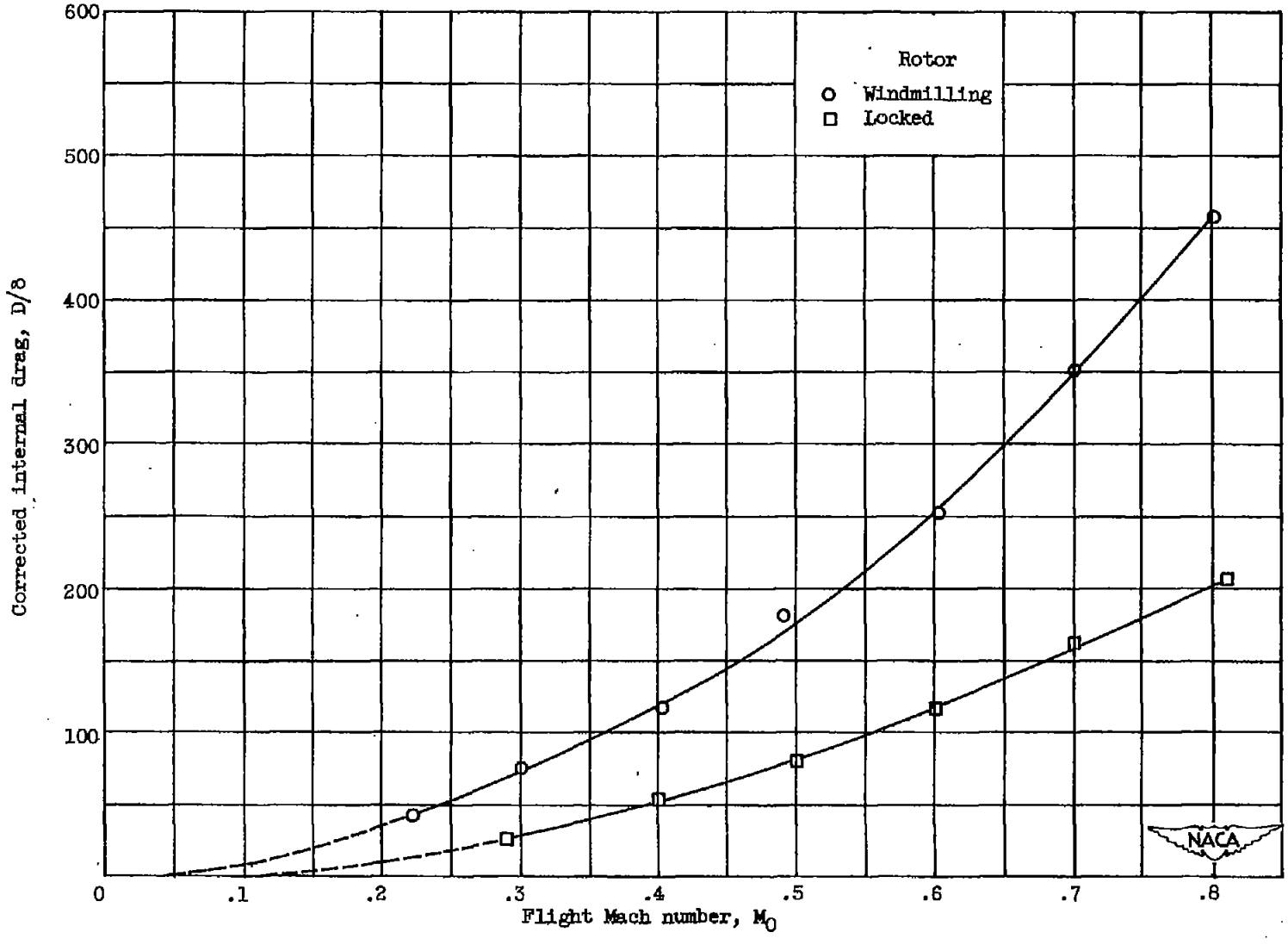

Figure 2. - Comparison of corrected internal drag characteristics of windmilling and locked-rotor turbojet engines.

CONFIDENTIAL

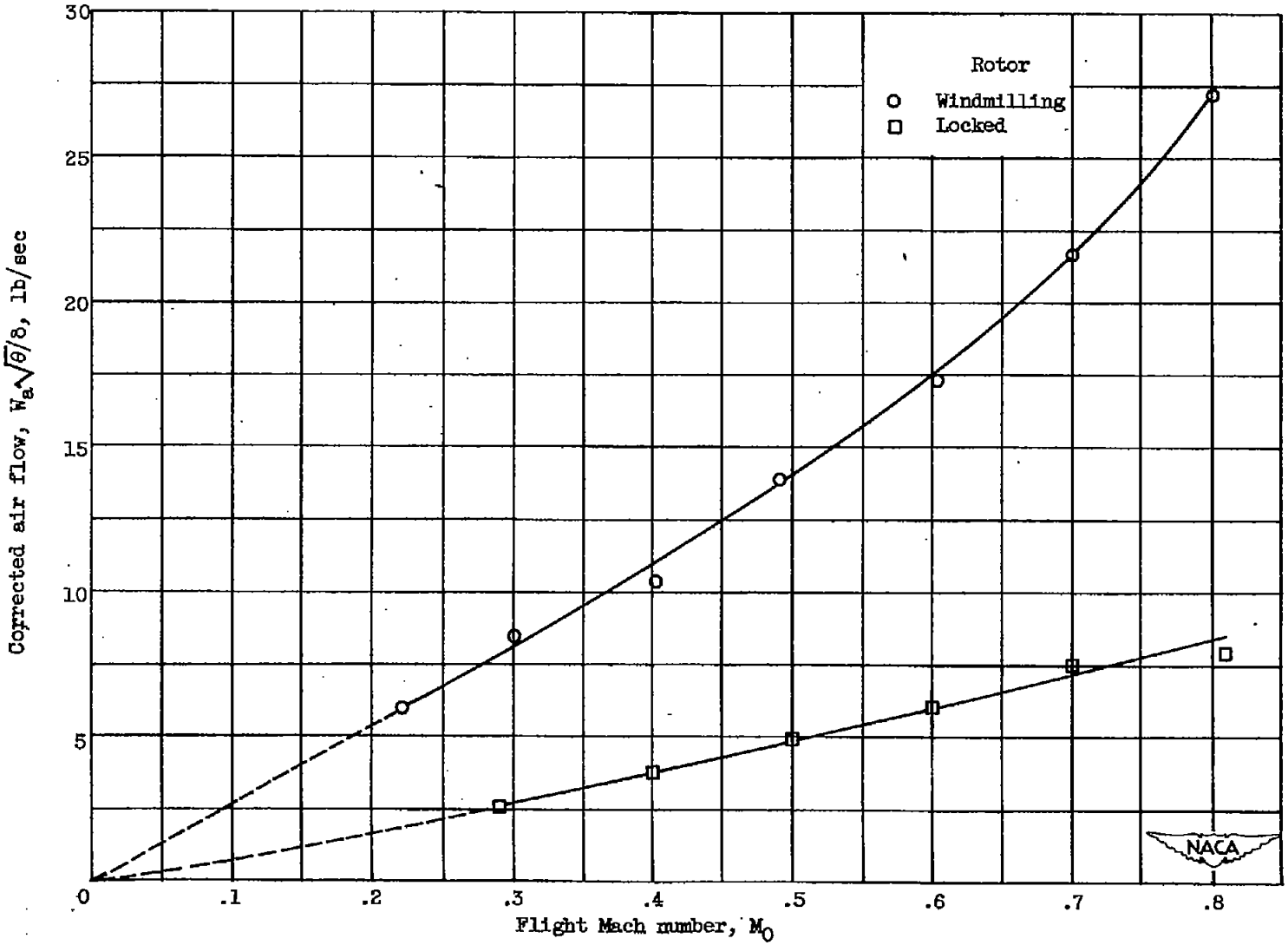

Figure 3. - Comparison of corrected air flows of locked-rotor and windmilling turbojet engines.

CONFIDENTIAL

CONFIDENTIAL

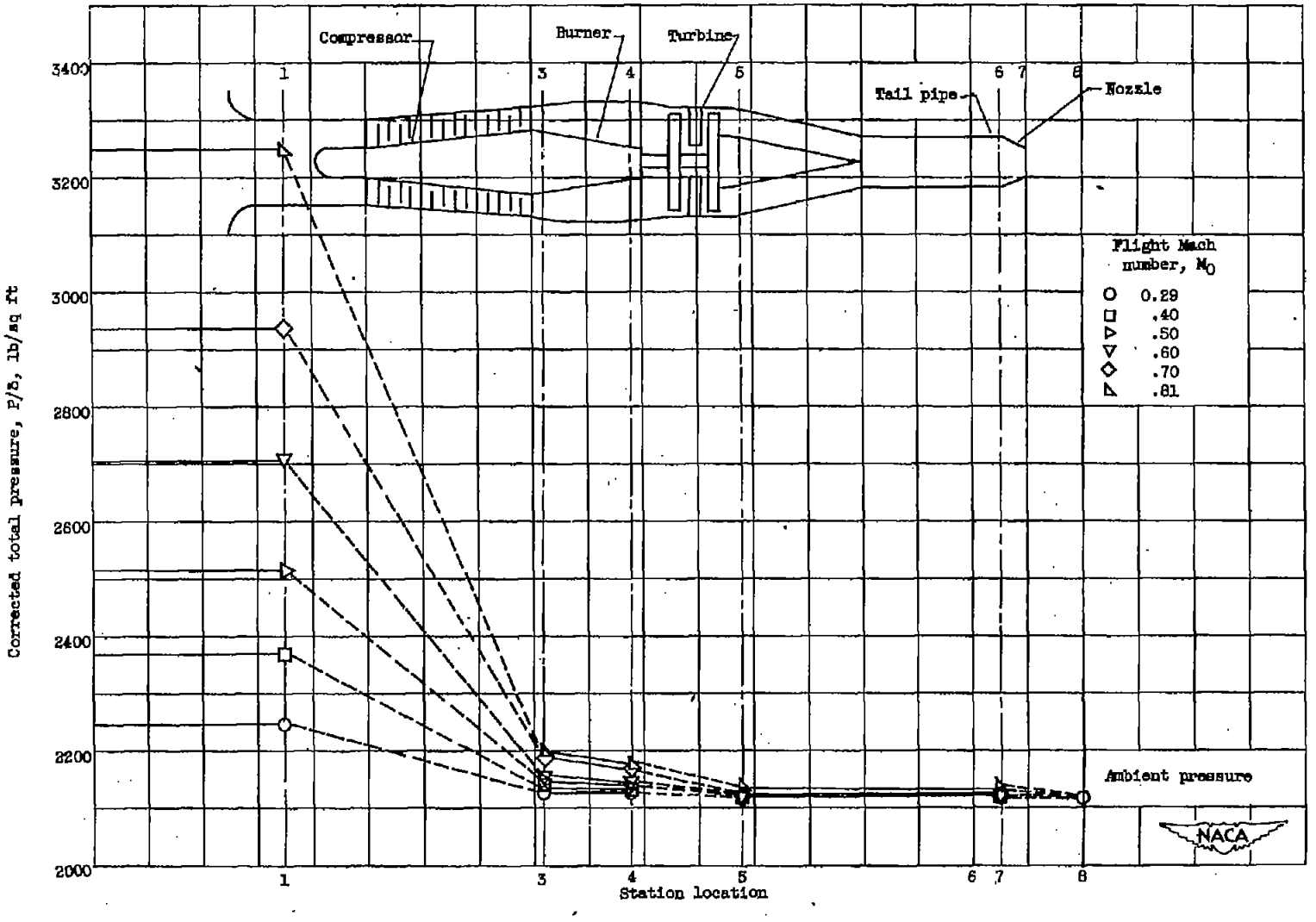

(a) Locked-rotor turbojet engine.

Figure 4. - Internal pressure variations with varying flight Mach number.

CONFIDENTIAL

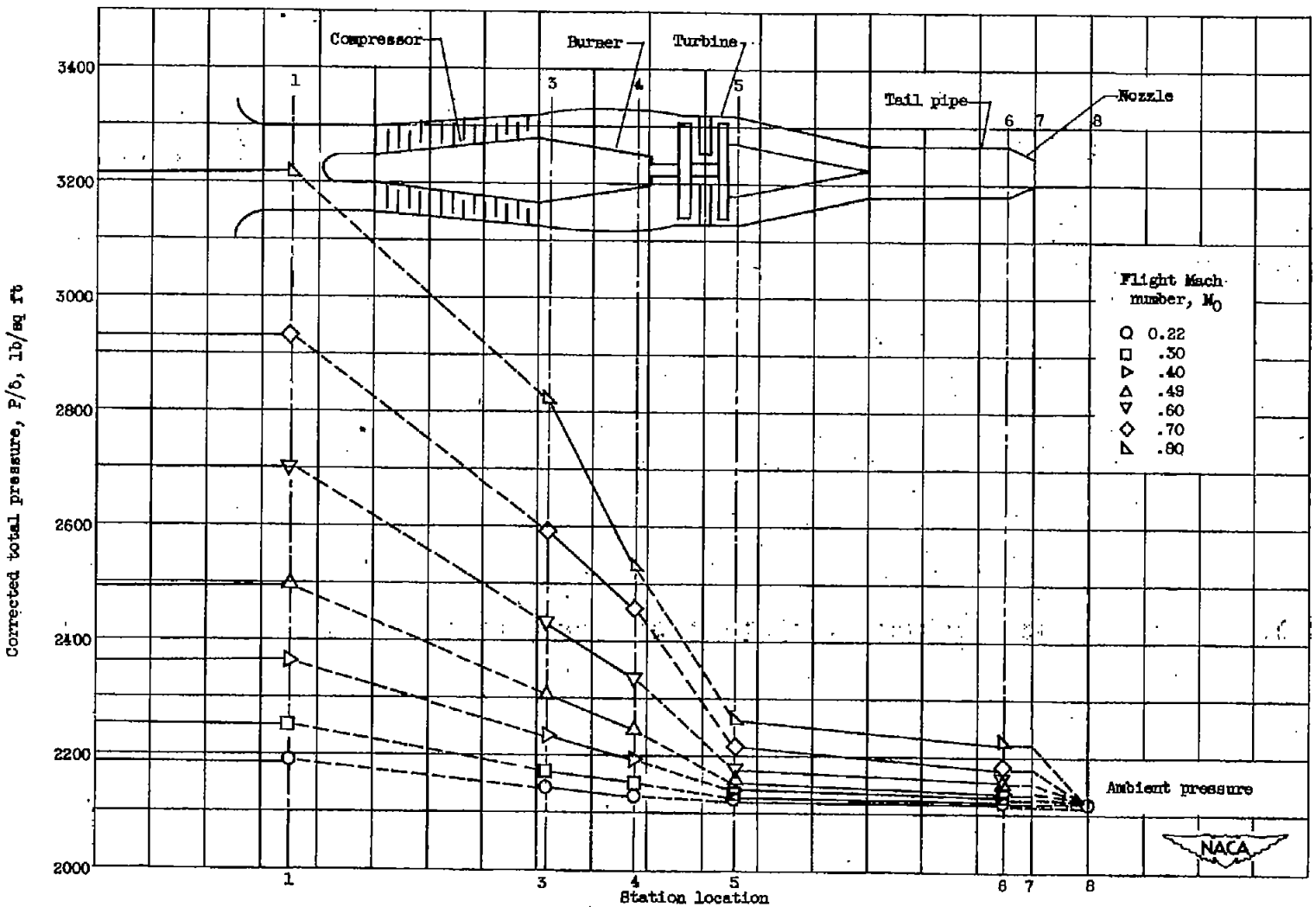

(b) Windmilling turbojet engine.

Figure 4. - Concluded. Internal pressure variations with varying flight Mach number.