SECURITY INFORMATION

CONFIDENTIAL

283

Copy
RM E52I08

TECH LIBRARY KAFB, NM

0143331

NACA RM E52I08

6772

NACA

RESEARCH MEMORANDUM

EVALUATION OF OPERATING CHARACTERISTICS OF A SUPERSONIC FREE-JET FACILITY FOR FULL-SCALE RAM-JET INVESTIGATIONS

By Carl B. Wentworth, Herbert G. Hurrell,
and Shigeo Nakanishi

Lewis Flight Propulsion Laboratory
Cleveland, Ohio

CLASSIFIED DOCUMENT

This material contains information affecting the National Defense of the United [illegible] within the [illegible] of the espionage laws, Title 18, U.S.C., Secs. 793 and 794, the transmission or [illegible] of which [illegible] any manner to unauthorized person is prohibited by law.

NATIONAL ADVISORY COMMITTEE
FOR AERONAUTICS

WASHINGTON
October 28, 1952

CONFIDENTIAL

TECH LIBRARY KAFB, NM
0143331

NATIONAL ADVISORY COMMITTEE FOR AERONAUTICS

RESEARCH MEMORANDUM

EVALUATION OF OPERATING CHARACTERISTICS OF A SUPERSONIC FREE-JET FACILITY FOR FULL-SCALE RAM-JET INVESTIGATIONS

2564

By Carl B. Wentworth, Herbert G. Hurrell
and Shigeo Nakanishi

SUMMARY

A supersonic free-jet facility (Mach number 3) capable of accommodating full-scale ram-jet engines has been constructed and evaluated. A 24-inch circular nozzle produces a jet of sufficiently uniform velocity that a good simulation of the engine internal flow is obtained. An annular diffuser placed around the engine recovers part of the total pressure of the jet flow passing outside the engine so that the pressure ratios which must be imposed across the facility to start and maintain the jet are kept to reasonable values.

INTRODUCTION

The investigation of the performance of ram-jet engines at high Mach numbers has been accomplished in free flight, by operation in supersonic wind tunnels, and by the direct-connect method. Each method has unique characteristics which make it a desirable research tool, but the usefulness of each is limited by either high costs or poor simulation of flight operation.

Free-flight operation, of course, gives an exact simulation of both external and internal flows for all flight attitudes; but this type of investigation entails the risk of engine loss, and the amount of instrumentation is limited by the necessity of telemetering the data to a ground station. The supersonic wind tunnel provides an excellent simulation of internal and external flows for all angles of attack, but the cost of a tunnel which could accommodate full-scale engines at Mach numbers from 2 to 3 would be large. The direct-connect investigation, conducted by piping air directly through the engine at pressures and temperatures corresponding to flight operation, provides a partial simulation of the internal flow; but the velocity distribution at the combustor inlet may not be comparable to the velocity distribution in a flight engine, because the supersonic-diffuser shock waves, which

influence the diffuser boundary layer, do not occur in the direct-connect investigation. The flow distortions resulting when operating at angle of attack cannot readily be simulated. Nevertheless, the direct-connect technique has been widely used in the development of ram-jet combustors because of its simplicity and low cost.

A supersonic free jet has been proposed as an alternative facility which should provide a good simulation of the internal flow of a ram-jet engine at a fraction of the cost of a wind tunnel suitable for the same range of flight Mach numbers and altitudes. The free jet used to simulate the high cruising altitudes of a ram-jet engine must have very low pressures. Consequently, it is necessary to provide means for the recovery of some of the jet total pressure by a suitable diffuser in order to keep the required capacity of the exhauster equipment within reasonable limits. A model investigation was conducted at the NACA Lewis laboratory to determine the effectiveness of an annular diffuser placed around the engine in such a way that engine accessibility was not impaired. The results of this investigation are reported in reference 1. Other investigators (reference 2) have studied a similar diffuser which does not provide the same degree of engine accessibility. The use of these free-jet diffusers should permit operation of a free jet with the same air compressors and exhauster equipment that have been used in the past for direct-connect investigations; however, the range of altitudes which can be simulated is not as great as for a direct-connect investigation.

2564

Based on the results of reference 1, a full-scale free-jet facility (Mach number 3) has been built at the NACA Lewis laboratory, and its performance and operating characteristics for zero-angle-of-attack operation are the subject of this report. Ram-jet engines up to 20 inches in diameter can be accommodated, and altitudes from 57,000 to 77,000 feet can be simulated.

The investigation of this facility has yielded data which describe the performance of the supersonic nozzle, the performance of the variable-area free-jet diffuser, and the over-all pressure ratios which are required to start and maintain flow of the design Mach number at the inlet of a 20-inch engine.

SYMBOLS

The following symbols are used in this report:

A area, sq ft

M local Mach number

P total pressure, lb/sq ft abs

p static pressure, lb/sq ft abs

S slant position on jet-diffuser inner cone measured from upstream edge, in.

T total temperature, $^{\circ}R$

γ ratio of specific heats

2564

Subscripts:

a downstream of jet diffuser or facility exhaust pressure

c jet chamber

m minimum

n jet-nozzle discharge plane

0 free-stream ambient (referring to conditions within jet)

1 behind a normal shock

APPARATUS AND INSTRUMENTATION

Free-Jet Facility

The free-jet test facility with a full-scale ram-jet engine installed is shown schematically in figure 1. The supersonic free jet is obtained by discharging the flow from an axially symmetric nozzle into a test chamber of larger diameter. The test chamber contains the ram jet with its inlet submerged in the supersonic flow field and an annular convergent-divergent passageway to diffuse the air flowing around the ram-jet inlet. Only with this diffusion can the facility be operated with the limited over-all pressure ratios that are usually available. The ram-jet exhaust and the jet-diffuser discharge are combined at the downstream end of the chamber and piped to the exhausting machinery. The facility utilizes compressed air which is first ducted through an air heater and then into a surge tank housing the inlet of the jet nozzle.

Surge tank. - Direct combustion by a turbojet combustor section is used to heat the compressed air before it enters the surge tank; thus the air contains the products of combustion from the heater. The surge tank is a 6-foot-diameter reservoir for the inlet air to the jet nozzle. The tank contains a baffle at its inlet end and a screen at about the midpoint. The size of the tank, the baffle, and the screen ensure parallel flow of uniform velocity at the nozzle inlet.

Supersonic nozzle. - An axially symmetric nozzle providing a Mach number 3 jet 24 inches in diameter (exclusive of boundary-layer) was used in this investigation. A circular jet of this size was selected for a 20-inch-diameter ram jet on the basis of a preliminary analysis which considered the available over-all pressure ratio (8) and the required pressure ratios as reported in reference 1. The analysis also predicted that a satisfactory range of altitudes could be simulated with this nozzle.

2564

The nozzle was designed to be as short as possible. The length of the supersonic section can be kept to a minimum by selecting a wall contour near the throat that will expand the flow rapidly until the design Mach number is reached on the axis of symmetry. After this initial expansion, the wall contour is no longer arbitrary but must be of a shape that will give uniform flow parallel to the axis at the exit of the nozzle. The wall contour selected for the throat region (before boundary-layer correction) was formed by a circular arc having a radius of 4.76 throat radii. The flow solution from the throat to a plane 0.20 throat radius downstream was determined by a series expansion according to reference 3. The remainder of the supersonic design, exclusive of boundary-layer correction, was determined by the numerical method of characteristics for three-dimensional flows having axial symmetry. The equations of reference 4 were used for this solution. A vertical spacing of 0.10 throat radius between points at the start of the characteristics net assured good accuracy from the calculations. The subsonic portion of the nonviscous design conforms to the "B" contour of reference 5 with the addition of an inlet bell-mouth.

After completion of the above design, a correction to the nozzle contour for boundary-layer effect had to be made. In the absence of a rigorous solution for the flow of a three-dimensional turbulent boundary layer, the method of reference 6 for plane radial flow was used to predict the boundary-layer growth. The nozzle flow field in a plane through the axis of symmetry was approximated by a radial flow pattern with a varying source (or sink), but the pressure gradient used was that from the three-dimensional nonviscous flow field. The adjustment to the nozzle contour was made equal to the boundary-layer-displacement thickness as defined in reference 6.

The final step in the nozzle design was the smoothing of the contour by the method of item differences (reference 7). The smoothing process was carried out to remove any discontinuities in the slope of the contour. The resulting nozzle coordinates are given in table I. The nozzle was machined from Meehanite castings to a tolerance of ± 0.010 inch. A thin layer of rust which formed on the nozzle existed throughout the investigation.

Jet diffuser. - The annular jet diffuser is an axially symmetric convergent-divergent type with a flow direction having both radial and

axial components; it was designed from information obtained from the investigation of reference 1. The inner wall of the jet diffuser is provided by a conic frustum of 20° half-angle (fig. 2). When the jet was surveyed, the configuration of figure 2(a) was used; with the 20-inch ram jet installed, the jet diffuser appeared as in figure 2(b). The outer wall consists of two conical sections: a 10° half-angle section to the throat, followed by one of 20° half-angle. The body forming the outer contour can be moved axially during operation of the facility, allowing adjustment of the throat area to the optimum value. For the design position the leading edge of the outer body was kept well downstream of the ram-jet lip so that reasonable movement upstream would not prevent shadowgraph observation of the flow entering the ram jet. In order to prevent air leakage around the jet diffuser, the gap between the outer body and the test-chamber wall is sealed by an "O" ring. The axial length of the fixed diffuser surface is only 44 inches; thus the burner section of the ram jet is accessible for service and possible modification.

2564

Test chamber. - The facility test chamber is a cylindrical tank 6 feet in diameter. One section of the tank can be rolled back to give access to the installation within. The ram jet is supported in the forward part of the tank by three water-cooled struts which maintain proper alinement of the engine with the jet. The ram-jet inlet was placed so that the diffuser cone and cowl were within cones defined by upstream and downstream Mach lines originating from the nozzle lip. Thus the stream entering the engine is not influenced by the pressure at the jet boundary so long as this pressure is equal to or less than the jet pressure. The ram-jet exhaust nozzle discharges into a long spray cooler in which the exhaust gases are cooled to less than 1000° F. The exit of the cooler is equipped with a throttle by which ram-jet pressures can be raised to assist ignition of the engine combustor and for cold-flow tests. The air from the jet diffuser is also cooled by a water spray, and the combined flow from the jet diffuser and the ram jet is cooled further by another water spray at the exit of the test chamber.

Instrumentation

A survey of the free-jet Mach number was made before installation of the ram-jet engine in the facility. A 5-probe pitot rake was used. The rake was mounted on a shaft extending the length of the test chamber (fig. 2(a)) and could be rotated or moved along the nozzle axis while the facility was in operation. A dummy ram-jet diffuser with no inner body was installed within the jet diffuser to substitute for the ram-jet diffusion and to allow the jet diffuser to operate at approximately its design mass flows. An attempt was made to utilize wedge-type probes in the jet survey, but the data obtained were considered unreliable.

Other than the jet-survey rake, the following instrumentation was used to measure pressures in this investigation:

(1) A 7-tube pitot rake in the surge tank (P_0)

(2) Static-pressure orifices spaced 2 inches apart longitudinally along the nozzle wall

(3) Four static-pressure orifices in the nozzle wall about 1 inch upstream of the exit and equally spaced around the circumference (p_0) 2564

(4) One wall static orifice in the jet chamber at the front of the test chamber

(5) Static-pressure orifices spaced 2 inches apart longitudinally along the inner contour of the jet diffuser (fig. 2(b))

(6) One static orifice in the wall of the test chamber immediately downstream of the jet diffuser (p_a).

The pressures were indicated on a multiple-tube manometer board with fluids providing a reading accuracy of about 1 percent for each pressure. The readings were recorded photographically.

The stagnation temperature of the jet was measured with a 7-thermocouple rake in the surge tank.

A shadowgraph installation permitted observation of flow conditions at the ram-jet inlet. The image was projected to the control room for continuous viewing or for photographic recording of the flow phenomena.

PROCEDURE

The initial facility configuration had a dummy engine diffuser similar to that shown in figure 2(a) so that the jet-nozzle rake could be mounted. The capture diameter of the initial dummy was 20 inches, which gave a ratio of nozzle-discharge area to engine capture area A_n/A_0 of 1.44. It was not possible to establish full jet flow with this arrangement, although an over-all pressure ratio of 8.5 was available. Reference 1 indicates that starting can be accomplished at lower pressure ratios as the ratio A_n/A_0 is increased. Accordingly, an extension was attached to the jet-diffuser inner cone which reduced the capture diameter to 17 inches, giving a ratio A_n/A_0 of 1.99. This arrangement, as shown in figure 2(a), permitted establishment of the jet, and it was used while the jet flow was being surveyed.

The survey of the jet was accomplished with pitot probes mounted on a rake as shown in figure 2(a). The Mach number M_0 at each probe was determined from the relation

2564

$$\frac{P_1}{P_0} = \left[\frac{(\gamma+1)\ M_0^2}{(\gamma-1)\ M_0^2 + 2}\right]^{\frac{\gamma}{\gamma-1}} \left[\frac{2\gamma M_0^2 - (\gamma-1)}{\gamma + 1}\right]^{-\frac{1}{\gamma-1}}$$

which gives the total-pressure ratio across a normal shock. It was assumed that all loss of total pressure between the nozzle inlet and the survey probe occurred in a normal shock in front of the probe.

The over-all pressure ratios required to start and maintain the jet were obtained by changing the exhaust pressure p_a while holding P_0 constant. As p_a was lowered, a point was reached where the nozzle and jet-chamber pressures jumped to a low value, which indicated flow establishment. The exhaust pressure at that instant was recorded. The exhaust pressure was then increased until a reverse change occurred, and the pressure was again recorded, a procedure which was repeated for several jet-diffuser throat-area settings.

Conditions of operation which resulted in condensation shock in the jet nozzle were determined by reducing the nozzle-inlet temperature T_0 as the nozzle-inlet pressure P_0 was held constant. The temperature was recorded for several nozzle-inlet pressures when the nozzle wall pressures first deviated from their original high-temperature values.

The data of this report were obtained with a 700° F inlet total temperature unless specifically noted otherwise, in order to eliminate possible condensation effects except when these effects were being studied.

DISCUSSION OF RESULTS

As mentioned in the INTRODUCTION, the value of the free-jet facility lies in the ability to give a good simulation of the internal flow of the engine under investigation. It is necessary, then, that the nozzle provide a jet having uniform velocity in the test section where the engine inlet is placed. The flow velocities obtained with the jet nozzle have been determined at various positions within the jet, and the results are presented in figure 3, where Mach number is plotted against nozzle radius. Data are presented for three axial locations.

The Mach number profile at a station 9.4 inches upstream of the nozzle-discharge plane is shown in figure 3(a). All probes are within the forward Mach cone originating from the nozzle lip. At this station the Mach number is essentially constant with an average value of 2.99. The Mach number survey made at the nozzle-discharge plane is shown in figure 3(b). The Mach number at a radius of 4 and 8 inches is now 2.95, although the Mach number at the axis is still approximately 3.0. At a station 7.1 inches downstream of the nozzle plane (fig. 3(c)), the Mach number at the axis is 2.90, although the Mach number at a radius of 4 and 8 inches is still approximately 2.95. Thus the maximum variation over the region surveyed was approximately 3 percent. Variations in flow velocity of this kind are commonly experienced in circular nozzles; and it is presumed that they are caused by disturbances propagated from the walls and which tend to collect, or focus, on the axis. It is felt that this jet is entirely satisfactory for the internal-flow investigations of ram-jet engines. 2564

Influence of Pressure Level on Jet Mach Number

The effect of pressure level on the Mach number at the nozzle-discharge plane is presented in figure 4, in which the unweighted average Mach number measurements from the 5 probes are plotted against the nozzle-inlet total pressure. A variation in Mach number from 2.96 to 2.98 was recorded as the total pressure varied from 2750 to 4900 pounds per square foot. The slight change in Mach number is probably due to differences in the rate of wall boundary-layer growth, which is a function of pressure and does not constitute a limit to the usefulness of the jet for its intended purpose.

Lengthwise Distribution of Wall Pressure in Jet Nozzle

The supersonic jet nozzle was equipped with static-pressure wall orifices so that the measured pressures might be compared to the theoretically predicted pressures. The results are given in figure 5, where the dimensionless static wall pressure is plotted against the axial position for a typical operating condition. The agreement between the design pressure distribution and the measured pressures is within 3 percent. It is apparent that the pressure along the throat wall reaches the critical value of 0.528 about 1/2 inch upstream of the throat, which corresponds closely to the prediction in reference 3.

A preliminary analysis was made to determine the condensation-shock characteristics of the jet according to reference 8. The specific humidity for each temperature was determined from the initial dew point of the air (-20° F) and the moisture addition due to combustion in the air heater. The predicted minimum temperatures for condensation-shock-free flow are plotted against nozzle-inlet total pressure in figure 6, and experimental check points are plotted on the same curve. The agreement between these data and the predicted temperature is quite good.

The results of further investigation of the condensation-shock characteristics of the facility are presented in figure 7, where the lengthwise distribution of wall pressures is plotted for various nozzle-inlet total temperatures. For temperatures of 700° and 650° F, the wall pressures indicate no disturbance. At a temperature of 600° F, there is a smooth rise of pressure in the last 8 inches of the nozzle. This disturbance moved progressively upstream with further reductions in temperature until at 450° F the disturbance occurred 30 inches upstream of the nozzle discharge. These data are for a nozzle total pressure of 3525 pounds per square foot, and it should be noted that the initial disturbance occurs at higher temperatures for higher pressures (fig. 6).

2564

Because the initial objective desired from this facility was to calibrate the flow of the jet nozzle and to determine the starting requirements, both of which might be influenced by condensation shock, the data defining the quality of the nozzle flow and the starting requirements were obtained for an inlet temperature of 700° F. However, the reductions of the jet Mach number which are based on the condensation-shock-pressure increases of figure 7 are $3\frac{1}{2}$ percent or less. When the proper temperature for Mach number 3 simulation is used (640° F for altitudes above the tropopause), the jet Mach number is reduced less than 1 percent from the value at an inlet temperature of 700° F. Thus proper temperature simulation is possible without serious reduction of the jet Mach number due to condensation shock.

Over-All Pressure Ratios Required for Operation

Compressor and exhauster machines capable of producing the pressure ratios required by high Mach number nozzles must be very large in order to handle the mass-flow rates of a jet large enough to enclose a full-scale engine inlet. Consequently, a jet diffuser which handles the air spilled around the engine inlet is used to recover as much of the jet total pressure as is possible so that the machinery requirements can be reduced. The effect of the diffuser is to reduce the pressure ratio across the facility but to maintain the necessary ratio across the jet nozzle. The jet-diffuser recovery is affected by the diffuser shape and by the fraction of the nozzle flow passing through it, which is characterized by the parameter A_n/A_0, where A_0 is the free-stream area of the captured stream tube.

As mentioned in the PROCEDURE section, two jet-diffuser shapes have been utilized and are sketched in figure 2. The first (fig. 2(a)) had a smooth conical inner wall and was designed to accommodate a jet-survey rake. The second (fig. 2(b)), which was designed to accommodate a 20-inch engine, had a sharp break where the engine cowl joined the 20° conical inner wall. Values of the parameter A_n/A_0 for the two

configurations were 1.99 and 2.56, respectively. These values apply only for a fully supersonic jet. It is expected that the flow division between engine or dummy and the jet diffuser was not the same prior to the establishment of the supersonic jet. Data have been obtained which describe the operating characteristics of each jet-diffuser configuration. Both the dummy and the ram-jet diffusers were supercritical for all data which are presented.

The operating requirements of the facility were determined by varying the over-all pressure ratio p_a/P_0 for fixed jet-diffuser area. The response of the jet-chamber pressure to these changes in over-all pressure ratio are typified by the curve of figure 8. The dimensionless jet-chamber pressure is plotted against the dimensionless jet-diffuser-outlet static pressure for the diffuser configuration with the engine installed (fig. 2(b)). After flow through the nozzle was started and the exhaust pressure p_a was lowered to approximately 0.19 P_0, the flow in the nozzle was partially supersonic, but a shock system existed at the nozzle exit which greatly interfered with the engine-inlet flow. When p_a was lowered to 0.156 P_0, the shock system passed downstream through the jet diffuser, and the jet-chamber pressure p_c changed discontinuously to 0.02 P_0, as shown in figure 8. In this condition the jet-nozzle flow was fully established within the Mach cone from the nozzle lip. When the exhaust pressure p_a was raised to 0.161 P_0, the flow reverted to the upper branch of figure 8 and the shock system reappeared at the nozzle exit. The flow in this condition was unusable and was considered to be broken down.

These establishment and breakdown values of the exhaust pressure p_a have been plotted for several jet-diffuser areas in figure 9. In this figure the over-all pressure ratio, or nozzle total pressure divided by exhaust pressure, is plotted against jet-diffuser area. The upper line represents pressure ratios required for the jet establishment, and the lower line the pressure ratios at which the jet breaks down. For the configuration with the engine installed (fig. 2(b)), the jet can be established with an over-all pressure ratio of 6.2 at a jet-diffuser minimum area of 3.1 square feet, as shown in figure 9(a). At the same jet-diffuser area, the jet is maintained until the ratio is reduced to 6.1; but if the diffuser area is set at 2.59 square feet after flow has been established, the jet does not break down until a ratio of 5.4 is reached. Jet establishment was not possible with a diffuser area less than 3.08 square feet, and the jet could not be maintained with a diffuser area less than 2.59 square feet.

For the diffuser configuration with the dummy engine (fig. 2(a)), the starting ratios were higher, as shown in figure 9(b). Values of the over-all pressure ratio required to establish the jet ranged from 8.2 to 8.6. The minimum breakdown ratio of 4.9 was obtained with a

jet-diffuser minimum area of 1.9 square feet. Thus, the starting ratios were higher than for the configuration with engine installed, but the breakdown ratios were approximately the same. Jet-diffuser areas were smaller for the dummy installation because the jet-diffuser (spilled) flow was less.

2564

The behavior of the external flow of the facility is comparable to the behavior of a one-dimensional system of two successive throats, where the first throat is at the nozzle minimum area and the second throat is the minimum section of the jet diffuser. The flow-establishment discontinuity of figure 8 is the result of the shock system passing from between the throats to a point downstream of the jet-diffuser minimum area, thereby producing the greater total-pressure losses demanded by the lowered exhaust pressure. These losses can then be reduced by increasing the exhaust pressure so that the shock system moves toward the diffuser throat, where the Mach number is lower and the shock losses are less. If the pressure is increased beyond the value which positions the shock system at the minimum area of the diffuser, the shock must move forward of the diffuser, and the jet is broken down as shown by the breakdown discontinuity of figure 8.

For an ideal system of successive throats, the shock movement corresponding to the jet establishment must occur when the shock has attained the greatest strength possible for a position between the throats. For this facility, the strongest shock would be a normal shock at a Mach number of 3 for which the total-pressure ratio is 0.328. If other pressure losses in the system are ignored, this pressure ratio corresponds to the starting pressure ratio of the jet. Thus, ideally, the free jet at a Mach number of 3 should be established at a value $P_0/p_a = 1/0.328 = 3.05$. The fact that the pressure ratio actually required is much larger (6.2) means that additional losses of pressure have occurred through the system.

The one-dimensional analogy can be used to explain certain features of figure 9. For example, the breakdown line of figure 9(a) has lower values as the diffuser area is reduced. The area reduction accomplishes greater supersonic compression; that is, the throat Mach number approaches 1. Consequently, the exhaust pressure can be increased, and the shock losses of the divergent part of the diffuser occur at lower Mach numbers. A limit occurs, however, when the throat Mach number is 1; and a further decrease in diffuser area causes the shock system to move to the nozzle, thus accounting for the vertical part of the curve. Operation with an area slightly larger than this critical area, 2.65 square feet, for example, gives optimum jet-diffuser recovery and the lowest required pressure ratio. The vertical part of the starting curve at 3.08 square feet indicates that the diffuser throat is choked, even though the entering flow is subsonic; hence decreases

in exhaust pressure cannot affect the shock system between the throats, and starting is impossible at any pressure ratio.

The established flow of the preceding discussion has always been attended by jet-chamber pressures which were smaller than the jet static pressure. An investigation was conducted to determine whether or not the jet-chamber pressure could be increased to equal or exceed the jet static pressure. The results are plotted in figure 10, where the dimensionless jet-chamber and jet static pressures are plotted against diffuser area. The data were obtained by maintaining a constant over-all pressure ratio and varying the diffuser area. At a diffuser area of 4.14 square feet, the jet-chamber and jet static pressures were equal, but the equilibrium was difficult to set and maintain. At a jet-diffuser area of 2.67 square feet, both the jet-chamber and jet static pressures increased discontinuously so that it was impossible to establish a condition where the two pressures were equal.

2564

When the jet-chamber pressure exceeded the jet static pressure, as at a diffuser minimum area of 4.14 square feet, shock disturbances were observed to enter the engine cowl. Such disturbances destroy the simulation of flight operation and cannot be tolerated. The engine might be moved closer to the nozzle discharge or into the nozzle itself so that the inlet is not affected by these shock waves, but this action would limit the opportunity for visual observation of the flow at the engine inlet. Thus it is not feasible to operate the present facility with the jet-chamber pressure equal to or larger than the jet pressure.

In figure 10 the smallest jet-diffuser-area setting which permitted a fully established jet is somewhat larger (2.67 sq ft) than is indicated in figure 9(a) (2.59 sq ft). This discrepancy has been traced to leakage of atmospheric air into the jet chamber. When the jet total pressure was high (large flow rate), the leakage was a small fraction of the jet-diffuser flow. At lower jet pressures the same amount of leakage was a greater fraction of the jet-diffuser flow, and this low-energy air increased the required operating pressure ratios for the facility. Thus leakage into the jet chamber must be held to a minimum, or the facility requirements are made more severe.

Pressure Rise in Jet Diffuser

Static-pressure orifices were incorporated in the inner conical wall of the jet diffuser so that the pressure rise through the diffuser channel could be studied. A typical pressure curve is presented in figure 11, where the dimensionless static wall pressure p/P_0 is plotted against the distance from the wall leading edge measured on a slant line S. The over-all pressure ratio P_0/p_a was well above the

minimum operating value (5.5 from fig. 9(a)), which indicates that the diffuser was not operating at best recovery. The pressure rise along the wall is quite complex, since there are several reversals in slope. However, certain conclusions that have been drawn by comparison to a one-dimensional flow are discussed in the following paragraphs.

2564

The Mach numbers at $S = 15$ and at the diffuser exit have been calculated from known values of mass flow, pressure, and channel area. At $S = 15$ the Mach number was 1.57 with a corresponding total pressure of 0.188 P_0. At the jet-diffuser exit, a Mach number of 0.50 was calculated. The corresponding total pressure was 0.131 P_0. The transition from Mach number 1.57 at $S = 15$ to Mach number 0.50 at the exit suggests a normal shock process somewhere in the divergent part of the diffuser. The pressure rise from $S = 27$ to $S = 33$ would correspond to a normal shock at 1.77 Mach number. According to one-dimensional theory, a Mach number of 1.8 will be reached at $S = 27$; therefore it seems reasonable that a normal shock occurs between $S = 27$ and $S = 33$. The large pressure hump at $S = 19$ occurs at a point where the flow is supersonic, which indicates that a contraction due to flow separation has occurred near the throat. Presumably the reexpansion to $S = 27$ means that the flow has again contacted the channel walls. The dashed curve from $S = 15$ to $S = 27$ is the theoretical one-dimensional expansion calculated from conditions at $S = 15$. The dashed curve from $S = 31$ to the exit is a theoretical line based on the exit conditions. Further attempts to calculate flow conditions through the channel seem fruitless because of the possibility that separation may exist and the flow area may not equal the channel area.

The large losses of total pressure between the jet-nozzle inlet and the point $S = 15$ arise from the following:

(1) The nozzle boundary layer. Approximately 10 percent of the jet-diffuser flow is low-energy nozzle boundary layer

(2) The engine diffuser conical shock waves

(3) The shock wave at the junction of the engine cowl and the jet-diffuser inner wall

(4) Turbulent mixing at the free-jet boundary

(5) The shock wave attending the initial contact of the jet with the outer diffuser wall

(6) Boundary shear in the jet diffuser.

Of these sources of loss, (3) and (5) show the greatest possibility of improvement. It is believed that considerable improvement can be made in the shape of the inlet to the jet diffuser, thus permitting greater diffuser recoveries.

The total-pressure loss between $S = 15$ and the exit has little significance, because the data of figure 11 were obtained for a diffuser recovery less than the maximum. The exit pressure could have been increased to 0.18 P_0 before causing the normal shock to reach the throat section.

Subcritical Engine Operation

2564

Design requirements for a ram-jet engine may call for subcritical diffuser operation (normal shock expelled). Attempts were made to operate the test engine subcritically in the free-jet facility to determine the practicability of subcritical investigations. A violent cycling began, however, at the diffuser critical recovery. The jet would alternately establish and break down, and the engine pressures fluctuated severely. The two-cone diffuser inlet was felt to be inherently unstable for subcritical operation at Mach number 3; therefore, the diffuser spike was replaced with a single cone of 71° included angle. The modified engine diffuser was operated with the normal shock expelled a small distance. This shock wave, however, reduced the recovery obtained with the jet diffuser, and the jet-chamber pressure increased. Further reductions of engine mass flow so increased the jet-chamber pressure that oblique shock waves from the nozzle lip intercepted the expelled normal shock in front of the cowl, and the entering flow was not properly simulated. However, operation was free from the cycling experienced with the unstable inlet. It is believed that refinements of the jet-diffuser inlet may permit subcritical investigations of engines having stable diffusers without compromising the quality of the flight simulation.

CONCLUDING REMARKS

A supersonic free-jet facility (Mach number 3) large enough to accommodate a 20-inch ram jet has been evaluated. The 24-inch-diameter jet was surveyed and found to give a flow Mach number within 3 percent of the design value. A simple annular diffuser placed around the engine recovers enough of the total pressure of the spilled flow to permit operation with over-all pressure ratios as low as 5.4, and the jet can be established with a pressure ratio of 6.2. The flow through the annular diffuser was investigated and found to be comparable to a system of successive throats.

Predictions of the formation of condensation shock in the jet nozzle were corroborated, but the intensity of the disturbance was not

great enough to affect significantly the flow entering the inlet of the ram-jet diffuser for the jet total temperatures of interest.

Lewis Flight Propulsion Laboratory
National Advisory Committee for Aeronautics
Cleveland, Ohio

2564

REFERENCES

1. Hunczak, Henry R.: An Investigation at Mach Numbers 2.98 and 2.18 of Axially Symmetric Free-Jet Diffusion with a Ram-Jet Engine. NACA RM E51L24, 1952.

2. Feldmann, F. K., Gafarian, A. V., and Bitondo, D.: Aerodynamic Research for the Design of Altitude Free-Jet Test Sections for Ram-Jet Test Facilities. Rep. No. AL-1265, North American Aviation, Inc., May 1, 1951.

3. Hooker, S. G.: The Flow of a Compressible Fluid in the Neighbourhood of the Throat of a Constriction in a Circular Wind Channel. R. & M. No. 1429, British A.R.C., May, 1931.

4. Cronvich, Lester L.: A Numerical-Graphical Method of Characteristics for Axially Symmetric Isentropic Flow. Jour. Aero. Sci., vol. 15, no. 3, March 1948, pp. 155-162.

5. Tsien, Hsue-Shen: On the Design of the Contraction Cone for a Wind Tunnel. Jour. Aero. Sci., vol. 10, no. 2, Feb. 1943, pp. 68-72.

6. Tucker, Maurice: Approximate Calculation of Turbulent Boundary-Layer Development in Compressible Flow. NACA TN 2337, 1951.

7. Worthing, Archie G., and Geffner, Joseph: Treatment of Experimental Data. John Wiley & Sons, Inc., 1943.

8. Burgess, Warren C., Jr., and Seashore, Ferris L.: Criterions for Condensation-Free Flow in Supersonic Tunnels. NACA TN 2518, 1951. (Supersedes NACA RM E9E02.)

TABLE I - COORDINATES OF MACH NUMBER 3 NOZZLE CONTOUR

X	R	X	R
81.456	[a]12.928	41.000	8.974
81.000	10.931	40.000	9.169
80.000	9.530	39.000	9.358
79.000	8.762	38.000	9.540
78.000	8.240	37.000	9.714
77.000	7.860	36.000	9.882
76.000	7.581	35.000	10.042
75.000	7.348	34.000	10.196
74.000	7.156	33.000	10.343
73.000	6.983	32.000	10.483
72.000	6.835	31.000	10.617
71.000	6.701	30.000	10.744
70.000	6.581	29.000	10.864
69.000	6.474	28.000	10.979
68.000	6.376	27.000	11.087
67.000	6.289	26.000	11.189
66.000	6.212	25.000	11.285
65.000	6.146	24.000	11.375
64.000	6.088	23.000	11.459
63.000	6.040	22.000	11.539
62.000	5.999	21.000	11.612
61.000	5.967	20.000	11.681
60.000	5.943	19.000	11.745
59.000	5.927	18.000	11.805
58.000	5.918	17.000	11.860
57.600	5.917	16.000	11.912
57.000	5.926	15.000	11.959
56.000	5.964	14.000	12.002
55.000	6.035	13.000	12.041
54.000	6.144	12.000	12.078
53.000	6.297	11.000	12.110
52.000	6.487	10.000	12.140
51.000	6.702	9.000	12.166
50.000	6.934	8.000	12.190
49.000	7.173	7.000	12.211
48.000	7.414	6.000	12.229
47.000	7.652	5.000	12.244
46.000	7.887	4.000	12.256
45.000	8.117	3.000	12.266
44.000	8.342	2.000	12.274
43.000	8.559	1.000	12.278
42.000	8.770	.000	[b]12.281

NACA

[a]Inlet

[b]Discharge

2564

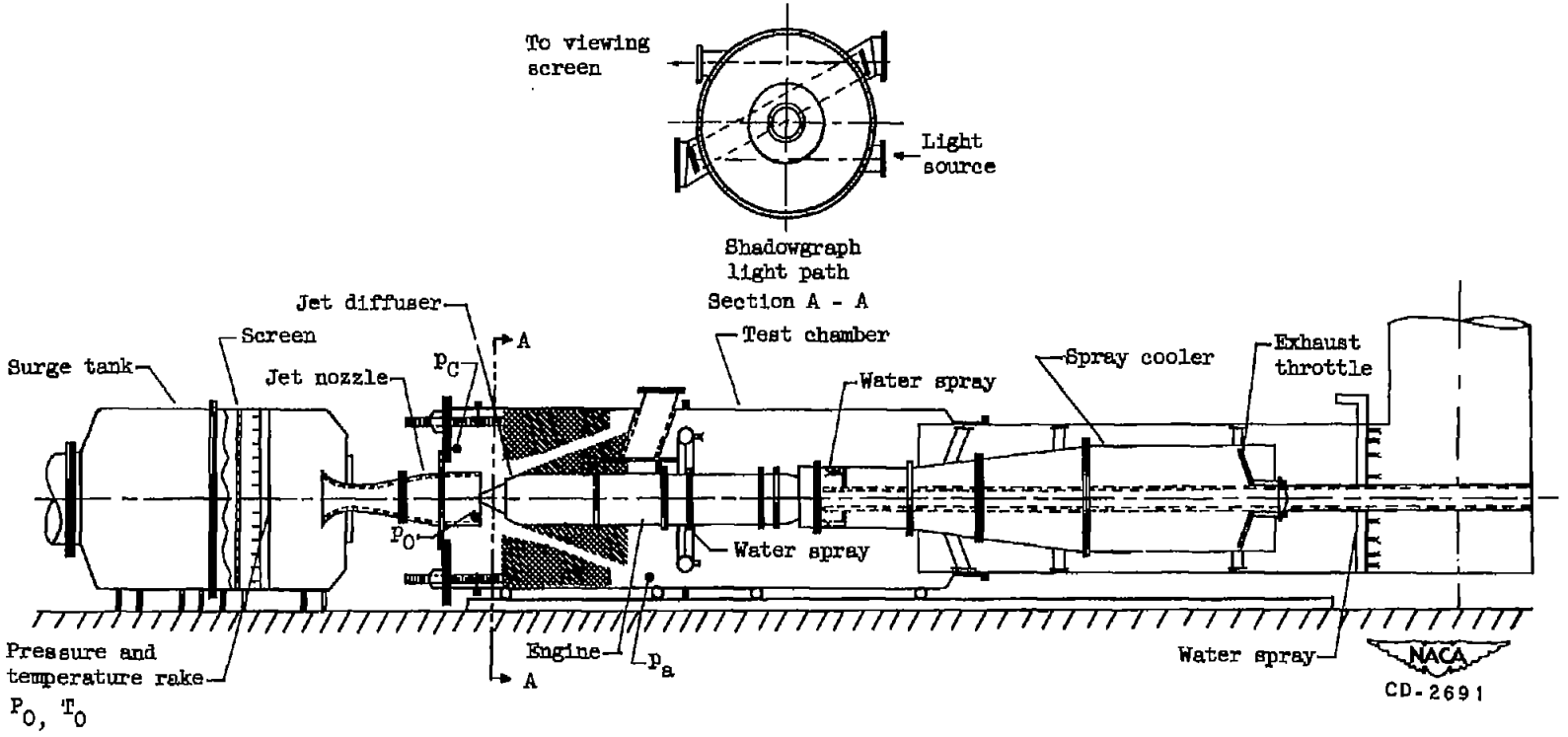

Figure 1. - Free-jet facility with ram-jet engine installed.

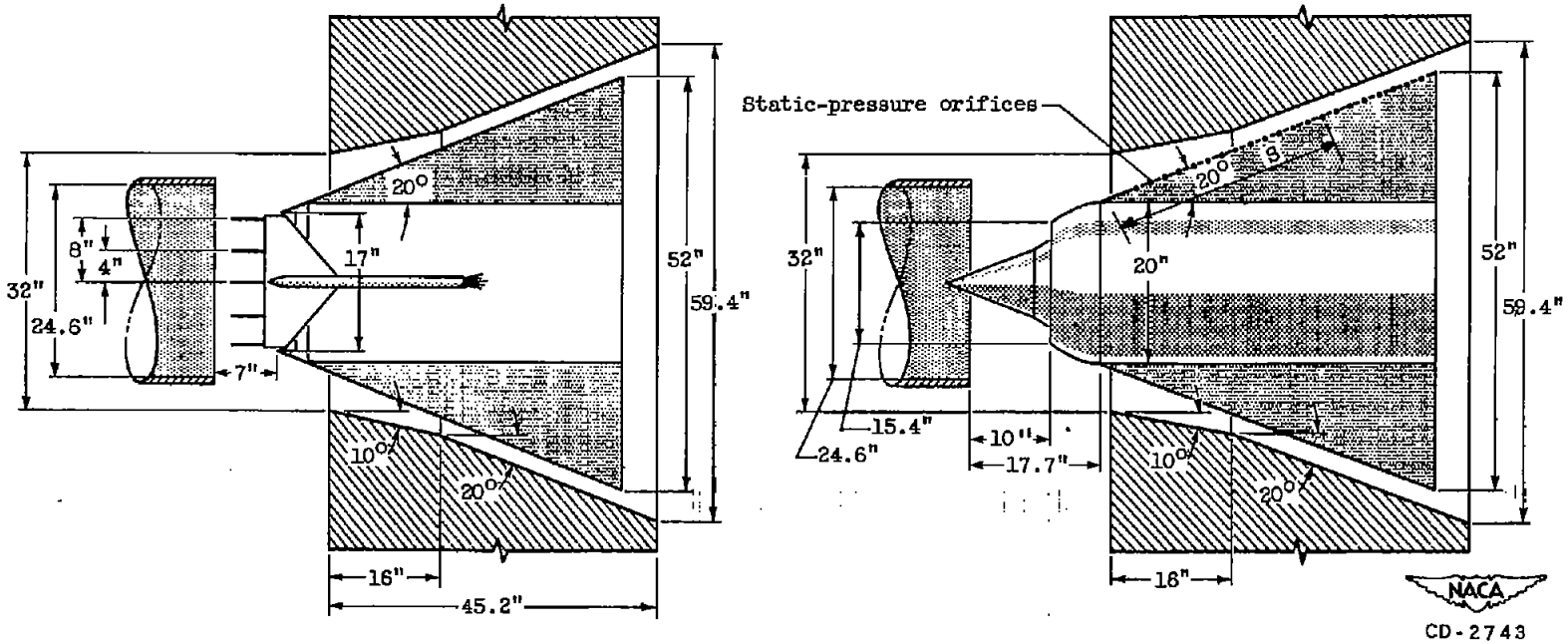

(a) Jet-diffuser arrangement used for nozzle calibration. Ratio of nozzle-discharge area to engine capture area, A_n/A_0, 1.99. Pitot rake is shown in position.

(b) Jet-diffuser arrangement with 20-inch ram-jet engine in place. Ratio of nozzle-discharge area to engine capture area, A_n/A_0, 2.63.

Figure 2. - Two jet-diffuser arrangements used in free-jet facility.

2564

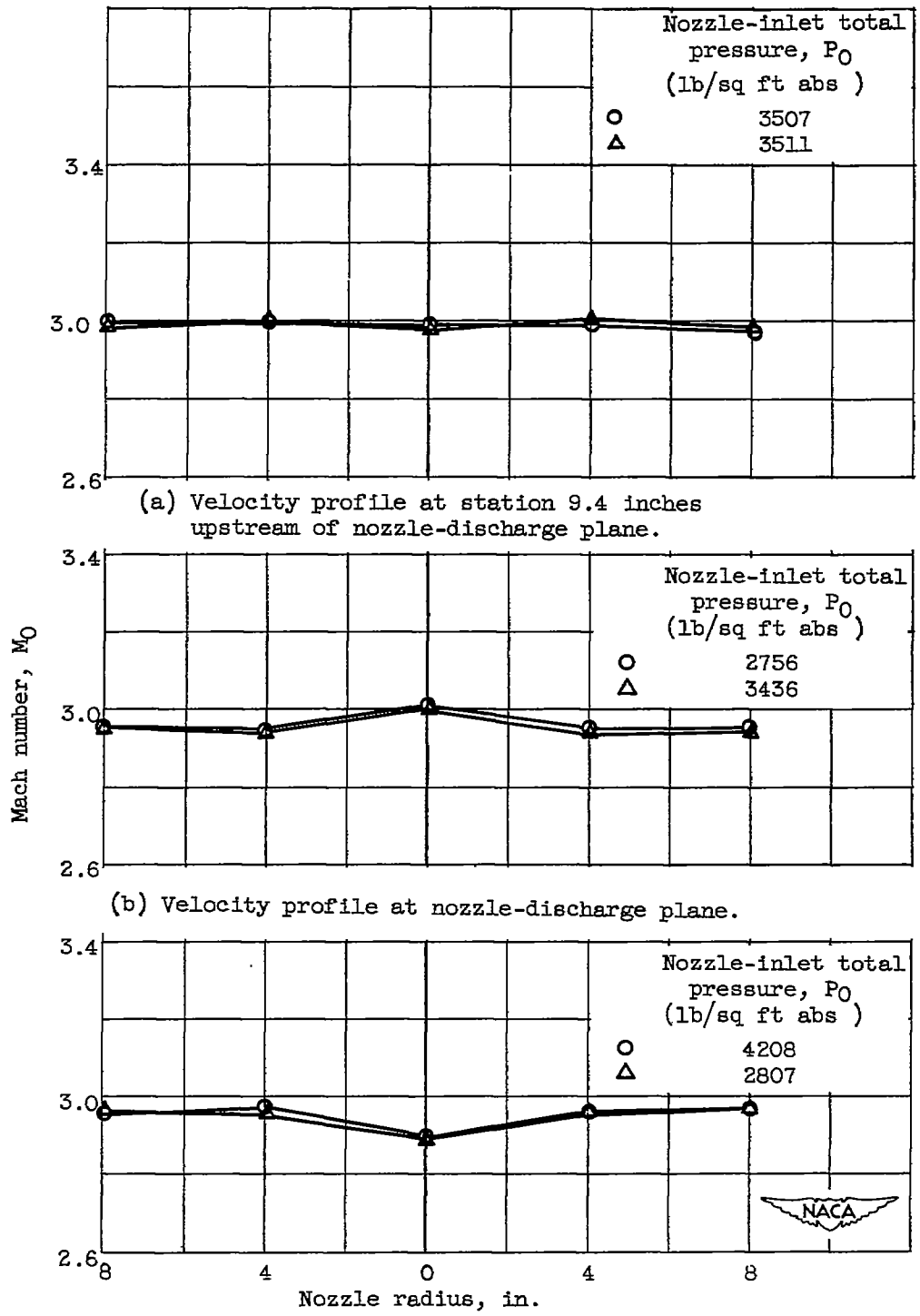

(a) Velocity profile at station 9.4 inches upstream of nozzle-discharge plane.

(b) Velocity profile at nozzle-discharge plane.

(c) Velocity profile at station 7.1 inches downstream of nozzle-discharge plane.

Figure 3. - Jet Mach number profiles of different axial stations.

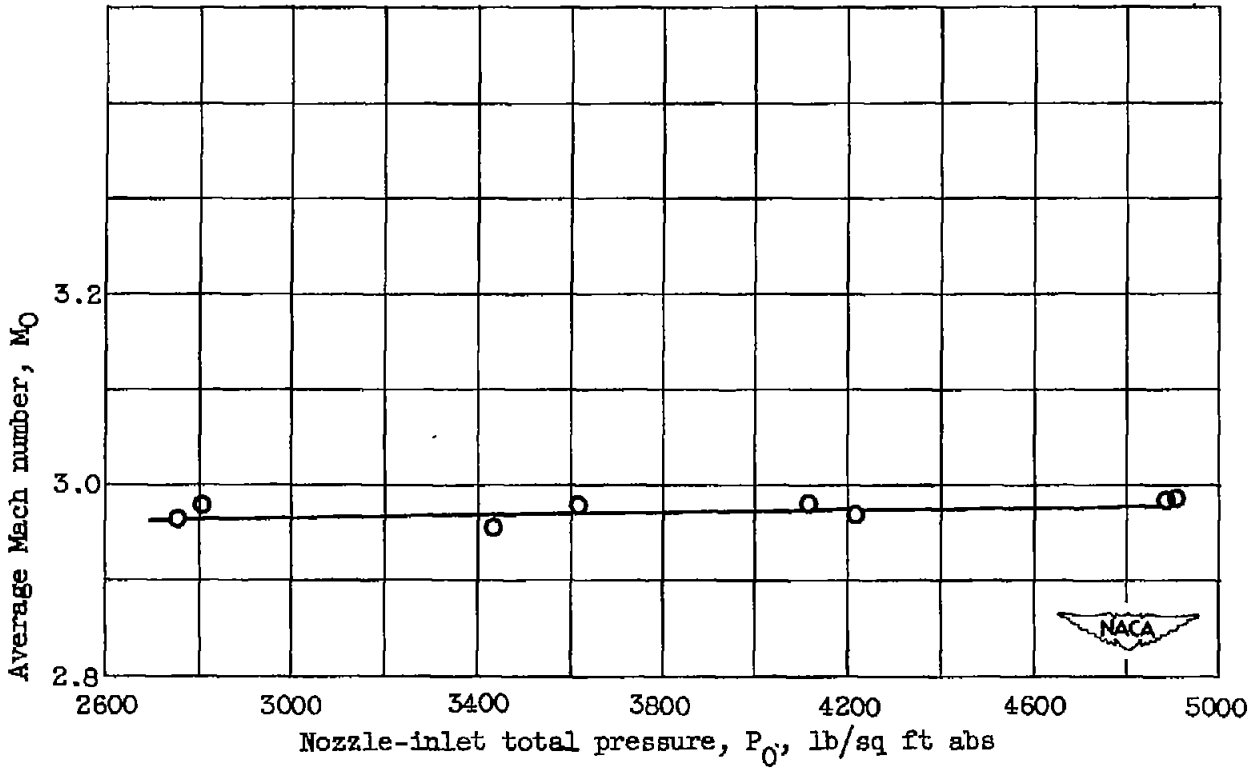

Figure 4. - Variation of average nozzle Mach number at the nozzle-discharge plane with pressure level.

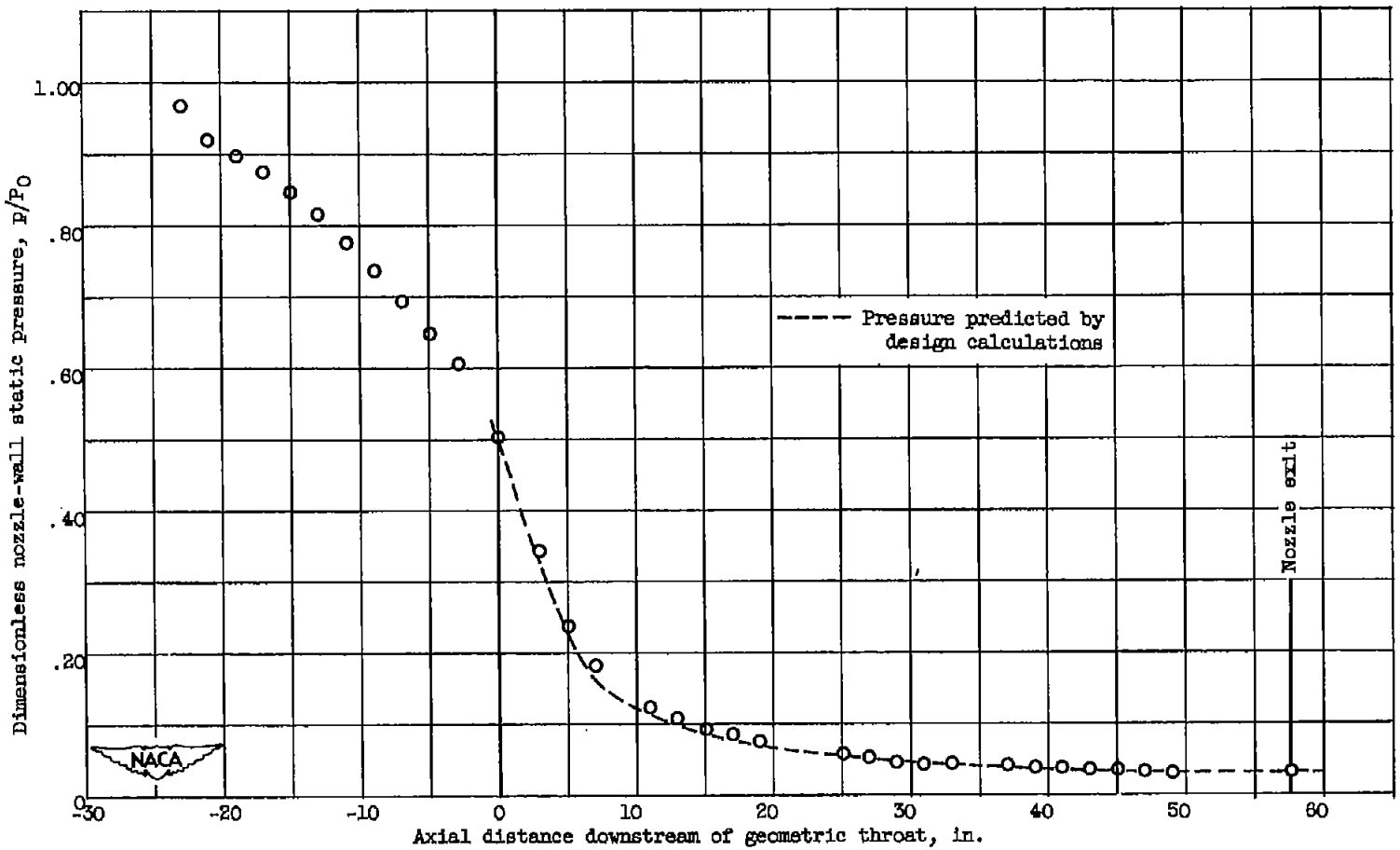

Figure 5. - Lengthwise distribution of wall pressure in Mach number 3 supersonic nozzle. Inlet total pressure, 3308 pounds per square foot absolute; static-pressure ratio, $\frac{p_c}{p_0} < 1$.

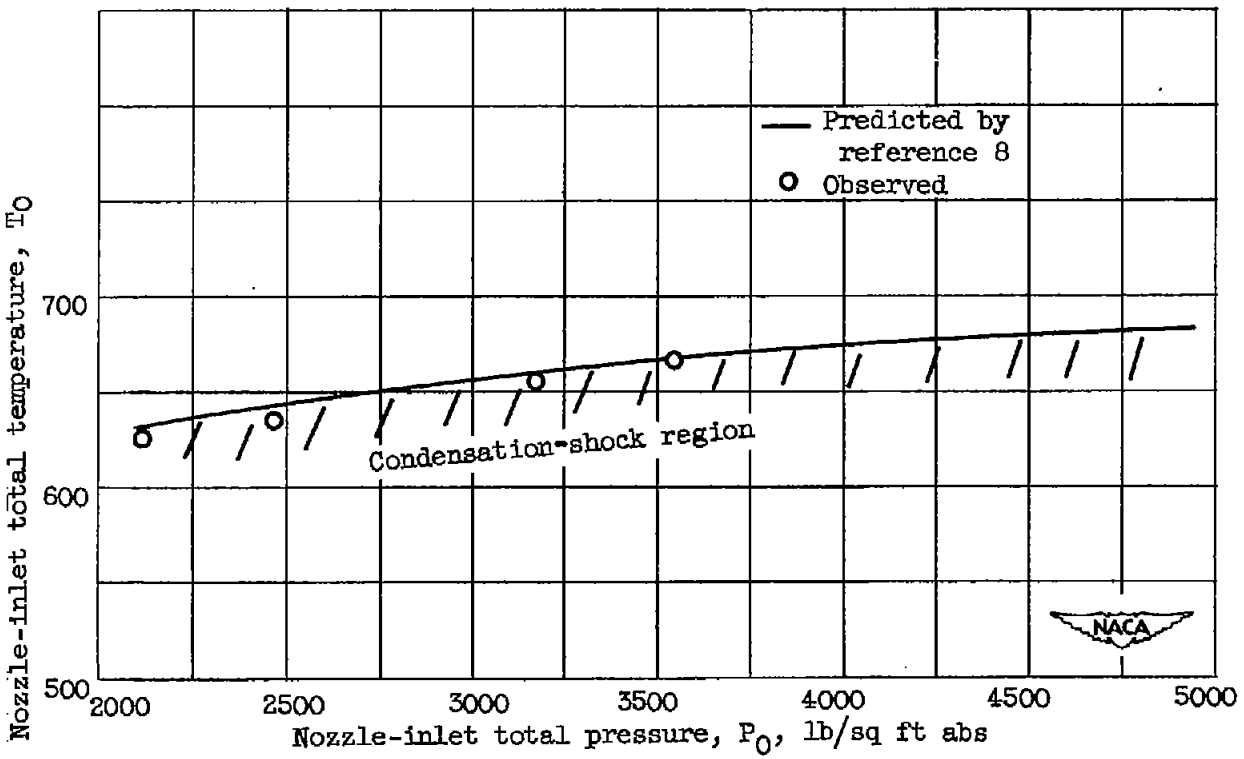

Figure 6. - Minimum nozzle-inlet total temperature for condensation-shock-free flow. Mach number, 3.

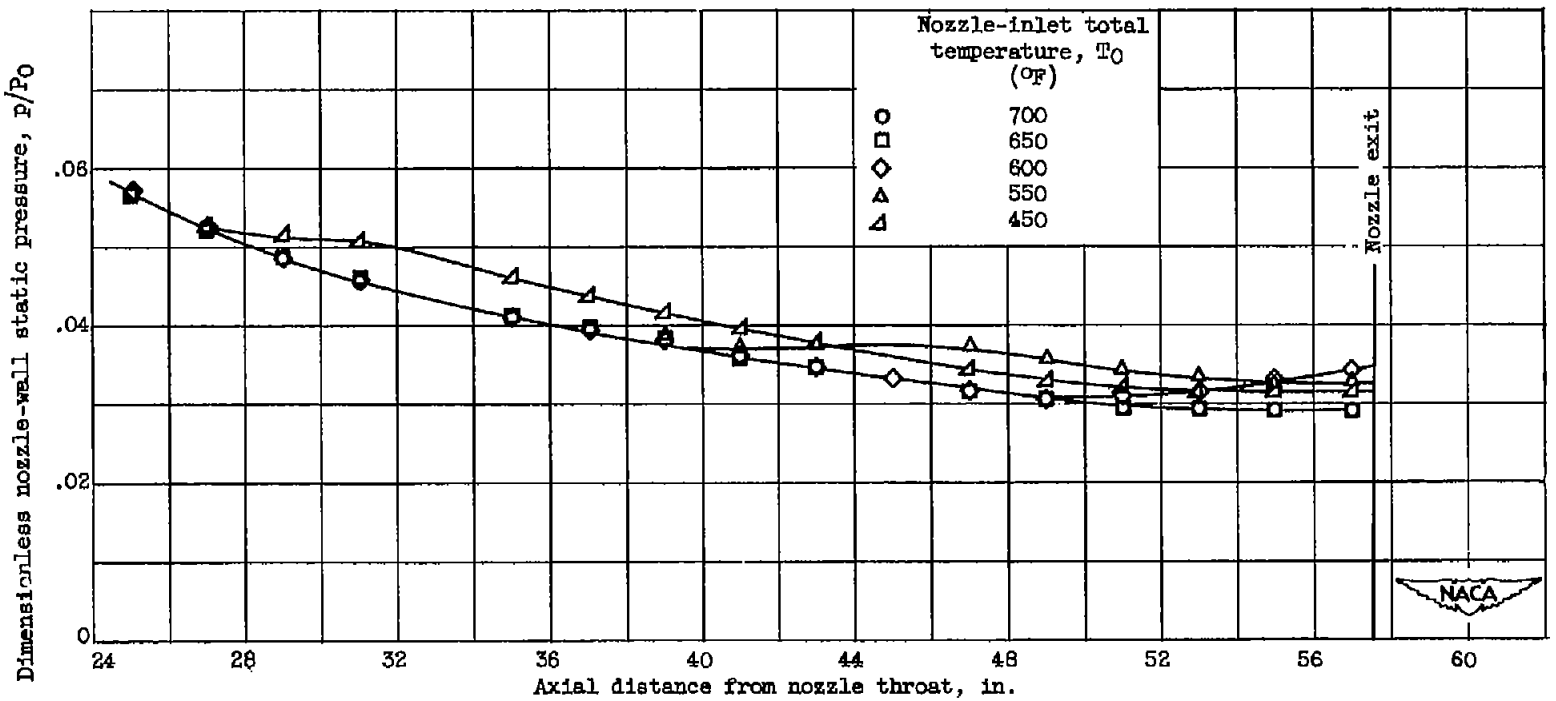

Figure 7. - Effect of nozzle-inlet total temperature on nozzle-wall pressures. Nozzle-inlet total pressure, 3525 pounds per square foot absolute; jet static pressure > jet-chamber pressure, $p_0 > p_c$.

2564

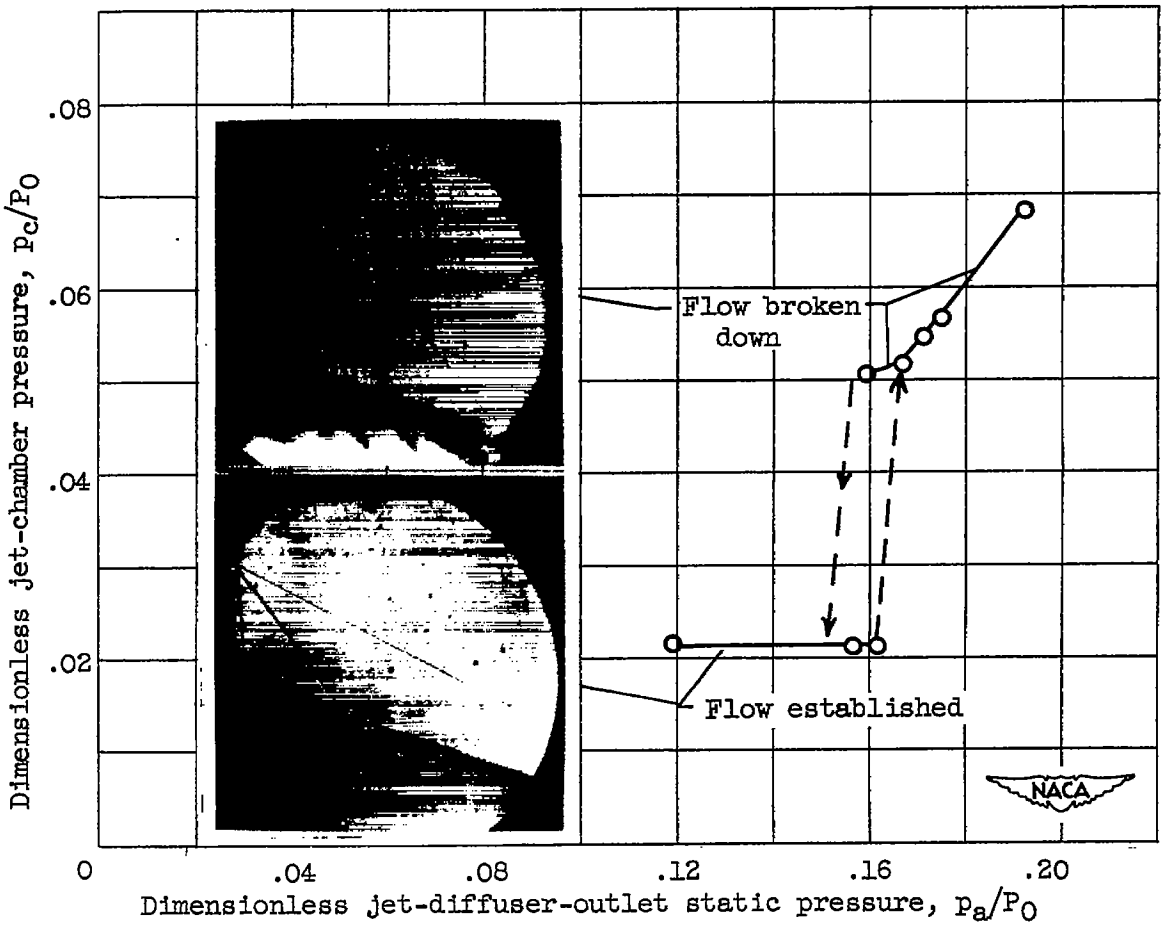

Figure 8. - Variation of jet-chamber pressure with exhaust pressure. Double-cone ram-jet engine installed. Jet-diffuser minimum area, 3.16 square feet.

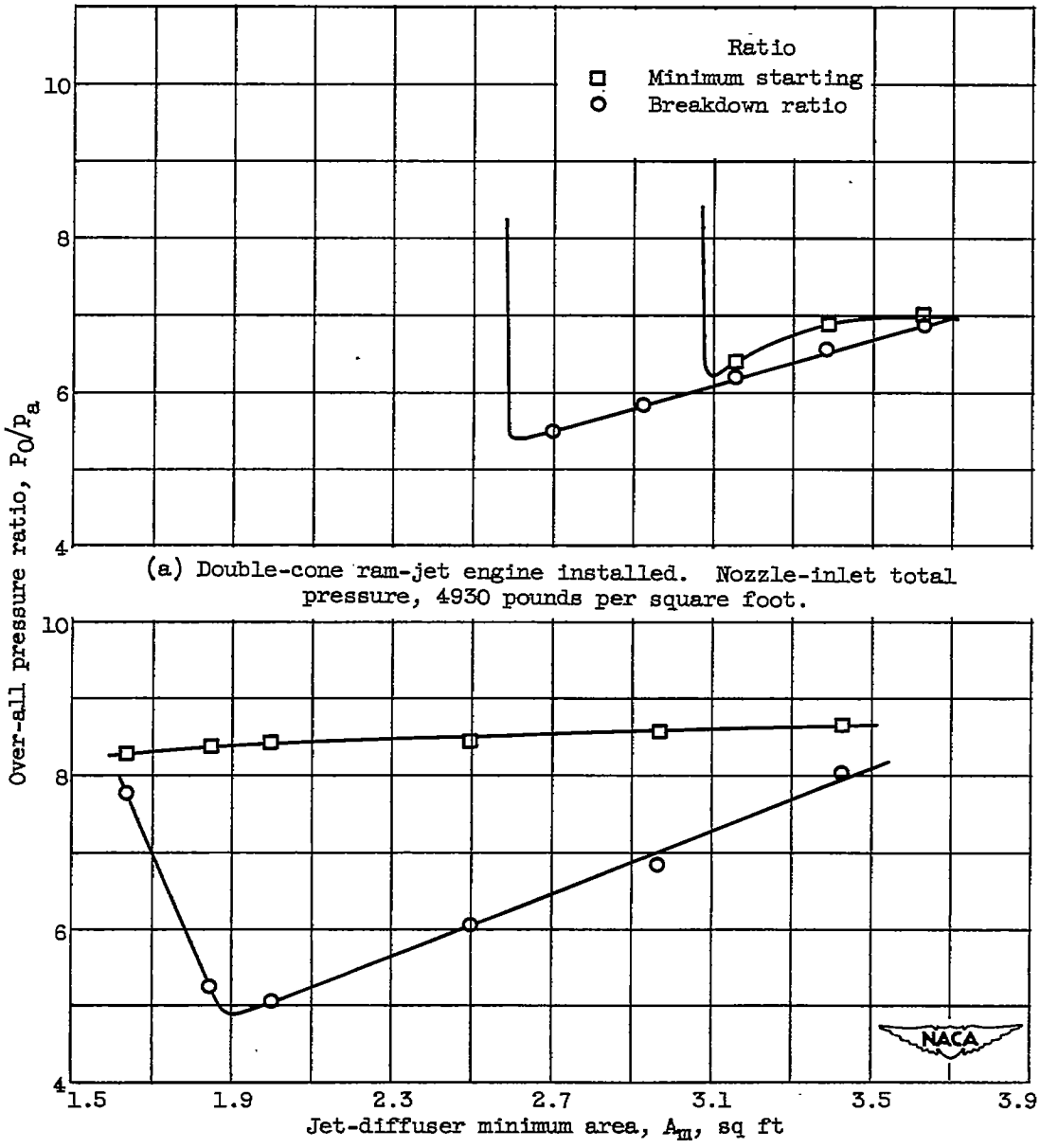

(a) Double-cone ram-jet engine installed. Nozzle-inlet total pressure, 4930 pounds per square foot.

(b) Dummy engine installed.

Figure 9. - Over-all pressure ratio required to establish supersonic flow, and over-all ratios at which flow breaks down.

CONFIDENTIAL

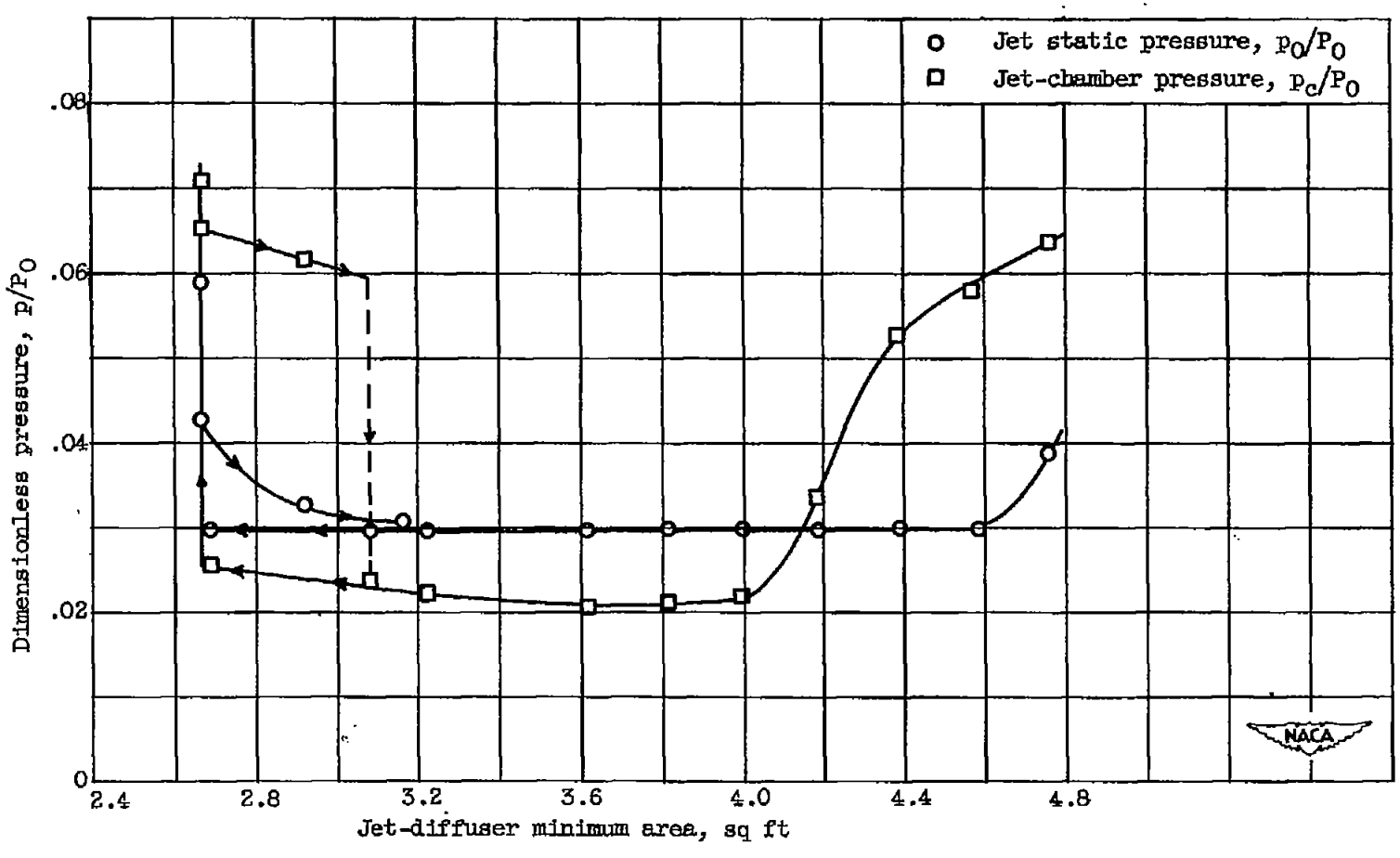

Figure 10. - Variation of jet-chamber pressure and nozzle-discharge pressure with jet-diffuser area. Nozzle-inlet total pressure, 3520 pounds per square foot; over-all pressure ratio, constant.

CONFIDENTIAL

CONFIDENTIAL

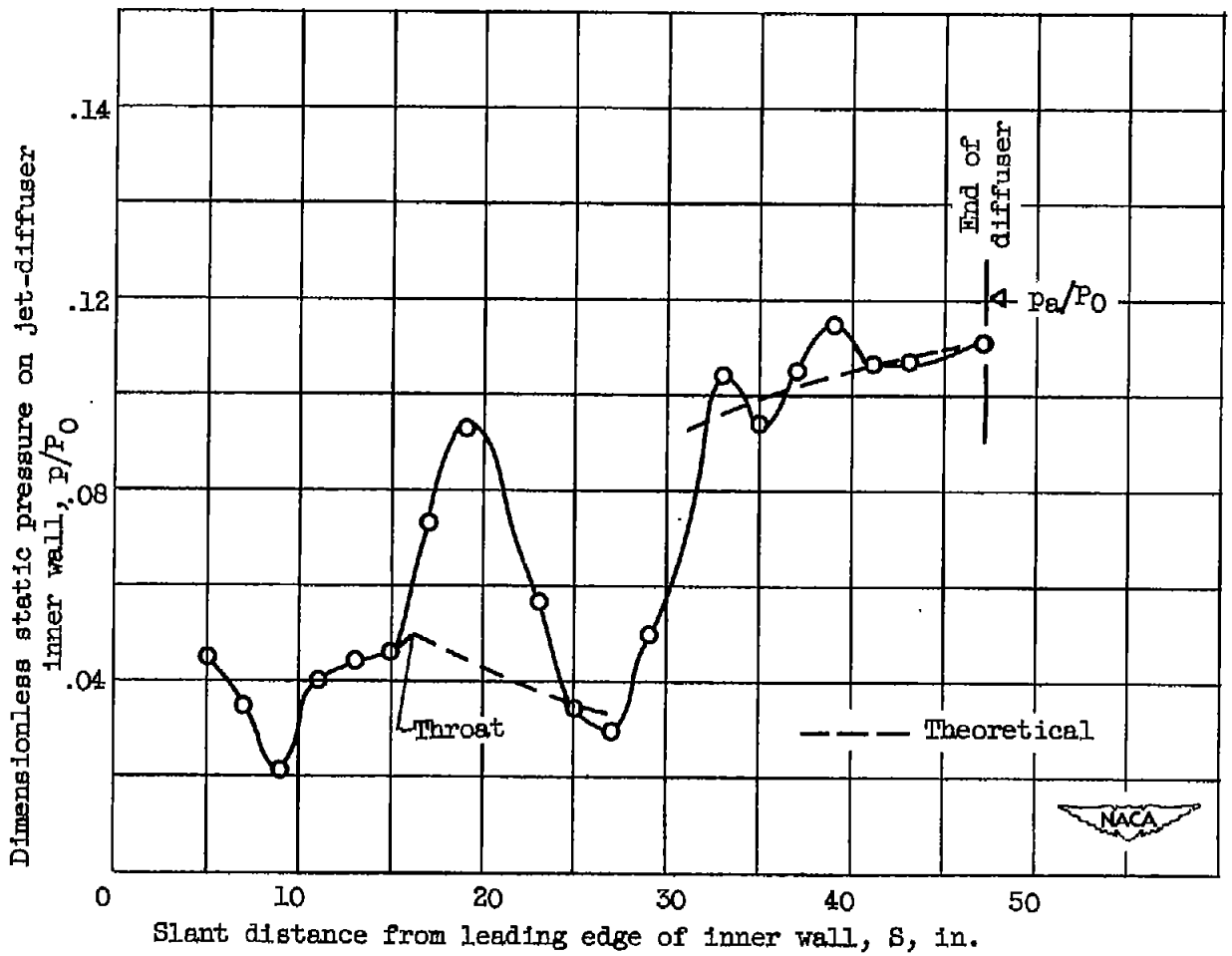

Figure 11. - Pressure rise through jet diffuser. Jet-diffuser minimum area, 2.85 square feet; over-all pressure ratio, 8.2.

NACA-Langley - 10-28-52 - 400

CONFIDENTIAL