SECURITY INFORMATION

CONFIDENTIAL

242
Copy
RM L51K28a

X-10

53-34-78

NACA RM L51K28a

7301

TECH LIBRARY KAFB, NM
0143827

NACA

RESEARCH MEMORANDUM

FLUTTER INVESTIGATION OF TWO THIN, LOW-ASPECT-RATIO, SWEPT, SOLID, METAL WINGS IN THE TRANSONIC RANGE BY USE OF A FREE-FALLING BODY

By W. T. Lauten, Jr. and Maurice A. Sylvester

Langley Aeronautical Laboratory
Langley Field, Va.

CLASSIFIED DOCUMENT

[redacted]

NATIONAL ADVISORY COMMITTEE
FOR AERONAUTICS

WASHINGTON
February 26, 1952

PERMANENT RECORD

CONFIDENTIAL

319.98/13

Classification cancelled (or changed to Unclassified)

By Authority NASA Tech Pub Announcement

(OFFICER AUTHORIZED TO CHANGE)

By ..... 73 9 NOV 54

GRADE OF OFFICER MAKING CHANGE)

DATE

TECH LIBRARY KAFB, NM
0143827

CONFIDENTIAL

NATIONAL ADVISORY COMMITTEE FOR AERONAUTICS

RESEARCH MEMORANDUM

FLUTTER INVESTIGATION OF TWO THIN, LOW-ASPECT-RATIO, SWEPT, SOLID, METAL WINGS IN THE TRANSONIC RANGE BY USE OF A FREE-FALLING BODY

By W. T. Lauten, Jr. and Maurice A. Sylvester

SUMMARY

Two thin, solid, metal wings were tested for flutter by means of the free-falling body technique to a Mach number of 1.23. The wings were untapered, swept 45°, and had a semispan aspect ratio of 1.25. This test was performed to explore the possibility of a bending type of flutter which was indicated by a simplified flutter analysis based on two-dimensional, unsteady, compressible-flow theory. Although the calculations indicated the possibility of flutter, none was obtained.

For the Mach number range under consideration the calculated flutter-speed coefficients showed a marked decrease in value with increase in Mach number and around Mach number 1.0 were so conservative that they may be considered pessimistic. It appears that the simplified analysis is too conservative for the type of wing configuration tested and that a less approximate analysis, possibly including finite-span effects, is needed to reduce the margin between theory and experiment.

INTRODUCTION

Recent trends in the design of interceptor type of aircraft have led to studies of the flutter characteristics of thin, low-aspect-ratio, swept wings at high altitudes. Because of the lack of theory for finite span and for the transonic range, calculations for these studies have been based on two-dimensional compressible-flow considerations. This simplified analysis indicates that such wings will develop a bending type of flutter in the transonic speed range, particularly at high altitudes. As a preliminary experimental investigation of this type of flutter, two untapered 45° sweptback wings of low aspect ratio have been tested by the free-fall technique. In order to provide data for

CONFIDENTIAL

a range of mass-density ratios, one of the wings was made of magnesium with a section thickness ratio of 4 percent and the other was made of steel with a section thickness ratio of 3 percent.

The present paper gives the results obtained from this experiment and a comparison of the experimental results with a series of calculations based on two-dimensional, unsteady, compressible-flow theory. The normal flow Mach numbers for which calculations were made ranged from 0 to 1.0.

SYMBOLS

A aspect ratio (including body intercept)

a nondimensional wing-elastic-axis position measured from midchord, positive rearward $\left(\frac{2x_o}{100} - 1\right)$

$a + x_\alpha$ nondimensional wing center of gravity measured from midchord, positive rearward $\left(\frac{2x_1}{100} - 1\right)$

b semichord of test wing taken perpendicular to the leading edge, feet

f frequency, cycles per second

g structural damping coefficient

h altitude (distance above sea level), feet

I_α section polar mass moment of inertia about elastic axis, $\frac{\text{foot-pound-second}^2}{\text{feet}}$

κ ratio of mass of cylinder of testing medium with diameter equal to chord of wing to mass of wing, both taken for equal length of span $\left(\frac{\pi\rho b^2}{m}\right)$

κ_{std} κ at standard air density ($\rho = 0.002378$)

l	length of wing measured along leading edge, feet
Λ	angle of sweepback, degrees
M	Mach number
m	mass of wing per unit length, slugs per foot
ω	circular frequency, radians per second ($2\pi f$)
p_s	static pressure, pounds per square foot
q	dynamic pressure, pounds per square foot
ρ	air density, slugs per cubic foot
r_α^2	square of nondimensional radius of gyration $\left(I_\alpha/mb^2\right)$
T	free-air temperature, degrees Fahrenheit absolute
t	time after release of bomb from airplane, seconds
V	stream velocity, feet per second
x_o	distance of elastic axis of wing section behind leading edge measured perpendicular to leading edge, percent chord
x_1	distance of center of gravity of wing section behind leading edge measured perpendicular to leading edge, percent chord

Subscripts:

e	experimental values obtained at any time
c	calculated values of flutter speed and flutter frequency based on two-dimensional unsteady compressible-flow theory
h_1	uncoupled first bending
h_2	uncoupled second bending
α_1	uncoupled first torsion

APPARATUS AND METHODS

Model

A photograph and a schematic drawing of the flutter vehicle which was utilized to carry the two test wings are shown in figures 1 and 2. One wing was made of magnesium with an NACA 16-004 section and the other wing was made of steel with an NACA 16-003 section (both sections perpendicular to the leading edge). Both wings had the same untapered plan form and were swept back 45°. The wing parameters are listed in table I.

Instrumentation

Each of the two wings was equipped with bending and torsional strain gages mounted near the root, and with a break wire to indicate wing failure. The vehicle also carried a longitudinal accelerometer for determination of velocity. Signals from the strain gages, accelerometer, and break wires were transmitted over six telemeter channels and were recorded simultaneously at two independent receiving stations. Time of release, altitude, and speed of the airplane were recorded or determined by the method reported in reference 1.

Measurements and Data Reduction

Natural frequencies, elastic axes, and mass and inertial characteristics of the wings were determined by ground tests. Free-air temperature and static pressure were measured as a function of altitude by simultaneous readings of the thermometer, pressure-altimeter, and radar altimeter during the descent of the airplane which carried the flutter vehicle.

With the initial airplane ground speed known from radar data and with the time after release as the primary variable, the telemetered longitudinal acceleration curve was integrated to give the missile velocity. Integration of the vertical component of the model velocity gave the altitude. Once the path had been determined, the free-air temperature and static pressure were read from the air data obtained during the descent of the airplane in order to obtain the time history of the fall. Mach number was obtained from the velocity and temperature. Atmospheric and flight conditions are plotted against time in figure 3.

RESULTS AND DISCUSSION

The time history of the fall of the flutter vehicle from an altitude of 36,000 feet is shown in figure 3. In the figure the variation of the model altitude, velocity, and Mach number with time are plotted together with the free-air static pressure and temperature corresponding to the altitude of the model. It will be noted that telemeter failure occurred 43.6 seconds after the model was released from the plane. At this time the altitude was 6830 feet and the Mach number was 1.23. The speed and other associated data are listed in table II for the time of telemeter failure since nothing is known concerning wing behavior after that time.

Although no flutter was encountered in the test, the following oscillations were noted. The telemeter record indicated that the magnesium wing oscillated intermittently at a frequency near that of its first bending frequency at a maximum tip amplitude of about ±1/8 inch. This oscillation was not restricted to any particular speed range but rather occurred during the entire flight. In addition to this low-amplitude intermittent oscillation, there was evident a low-frequency oscillation that commenced with a tip amplitude of approximately ±1/8 inch at a frequency of about 0.75 cycle per second just after release from the plane. The frequency of this oscillation slowly increased to 2.8 cycles per second and the tip amplitude increased to about ±3/4 inch shortly before telemeter failure. Immediately prior to telemeter failure this low-frequency oscillation (2.8 cps) damped to an amplitude of about ±1/8 inch. The steel wing oscillated in a similar manner but with smaller tip amplitudes.

Calculations have been made in order to permit a comparison of experimental results and simplified flutter theory. These calculations are based on two-dimensional unsteady compressible-flow theory and utilize a method of flutter analysis which includes effects of sweep and mode shape but not of finite span (reference 2). The aerodynamic coefficients which were used for the calculations were selected to correspond to the normal flow Mach numbers of 0, 0.5, 0.7, and 1.0 (reference 3). The results of these calculations in the form of the nondimensional flutter-speed coefficient $V_c/b\omega_{\alpha_1}$ and the experimental results in the form of the nondimensional flight-speed coefficient $V_e/b\omega_{\alpha_1}$ are plotted as a function of free-stream Mach number in figure 4. The theoretical unstable region is above the calculated flutter curve and the experimental results are indicated by the flight history of the wings.

All calculations for figure 4 were made for the air density corresponding to the altitude of the model at the time of telemeter failure.

The calculated flutter curves, then, give the effect of Mach number on the calculated flutter-speed coefficients. For thin, heavy, swept wings of this type one effect of increasing Mach number, for the Mach number range investigated, is to decrease the ratio of the predicted flutter frequency to the natural torsional frequency $\omega_c/\omega_{\alpha_1}$. The decrease of this frequency ratio is sufficient to indicate a single-degree-of-freedom bending type of flutter at transonic Mach numbers; that is, the flutter frequency ω_c approaches the natural bending frequency ω_{h_1}. For increasing Mach number the calculations also indicate a decrease in the corresponding value of the calculated flutter-speed coefficient. A comparison of the calculated flutter curves for the steel and magnesium wings shows that this decrease is more pronounced for the higher value of $1/\kappa$ of the steel wing. For a given wing configuration increasing values of $1/\kappa$ would be associated with increasing altitude.

The only value of the abscissa in figure 4 at which the experimental $1/\kappa$ and the $1/\kappa$ used in the calculations are the same is at the Mach number of 1.23. Consequently, it is only at this Mach number that a strict comparison may be made of the experimental and calculated results. At this point the experimental flight history of both wings extends well into the theoretical unstable region above the calculated flutter curve. Since flutter was not obtained, the simplified calculations based on two-dimensional compressible-flow theory may be considered pessimistic. These results indicate that a less approximate analysis, including finite-span effect, is needed to reduce the margin between theory and experiment for this type of low-aspect-ratio wing in the transonic speed range.

CONCLUDING REMARKS

Two thin, interceptor-type (low-aspect-ratio), 45° sweptback, untapered wings of solid metal construction have been tested for flutter up to a Mach number of 1.23 by the free-falling-body technique. No flutter was obtained in this test although a bending type of flutter was predicted by an analysis based on two-dimensional, unsteady, compressible-flow theory. This simplified analysis has been used with considerable success for many wing configurations but is overly conservative for these thin, heavy, swept wings of low aspect ratio. The results indicated that a more exact analysis, including finite-span effects, is needed to reduce the margin between experiment and theory.

Langley Aeronautical Laboratory
National Advisory Committee for Aeronautics
Langley Field, Va.

REFERENCES

1. Clevenson, S. A., and Lauten, William T., Jr.: Flutter Investigation in the Transonic Range of Six Airfoils Attached to Three Freely Falling Bodies. NACA RM L7K16, 1948.

2. Barmby, J. G., Cunningham, H. J., and Garrick, I. E.: Study of Effects of Sweep on the Flutter of Cantilever Wings. NACA Rep. 1014, 1951. (Formerly NACA TN 2121.)

3. Nelson, Herbert C. and Berman, Julian H.: Calculations on the Forces and Moments for an Oscillating Wing-Aileron Combination in Two-Dimensional Potential Flow at Sonic Speed. NACA TN 2590, 1952.

TABLE I.- WING PARAMETERS

	Steel wing	Magnesium wing
Section	NACA 16-003	NACA 16-004
Λ, deg	45	45
b, ft	0.5	0.5
l, ft	2.5	2.5
A	3.13	3.13
$1/\kappa_{std}$	178.8	51.7
x_1, percent chord . .	48.4	48.4
x_o, percent chord . .	65.6	67.4
a	0.312	0.348
$a + x_\alpha$	-0.032	-0.032
r_α^2	0.3202	0.3869
g_{h_1}	0.003	0.003
f_{h_1}, cps	12	16.5
f_{h_2}, cps	59	74
f_{α_1}, cps	74.7	96.4

NACA

TABLE II.- EXPERIMENTAL RESULTS AT TIME

OF TELEMETER FAILURE

	Steel wing	Magnesium wing
M	1.23	1.23
V, fps	1314	1314
ρ, slugs/cu ft . .	0.001972	0.001972
q, lb/sq ft . . .	1702	1702
$1/\kappa$	215.8	62.4
t, sec	43.6	43.6
h, ft	6830	6830
T, °F abs	479.4	479.4
p_s, lb/sq ft . . .	1618	1618

NACA

CONFIDENTIAL

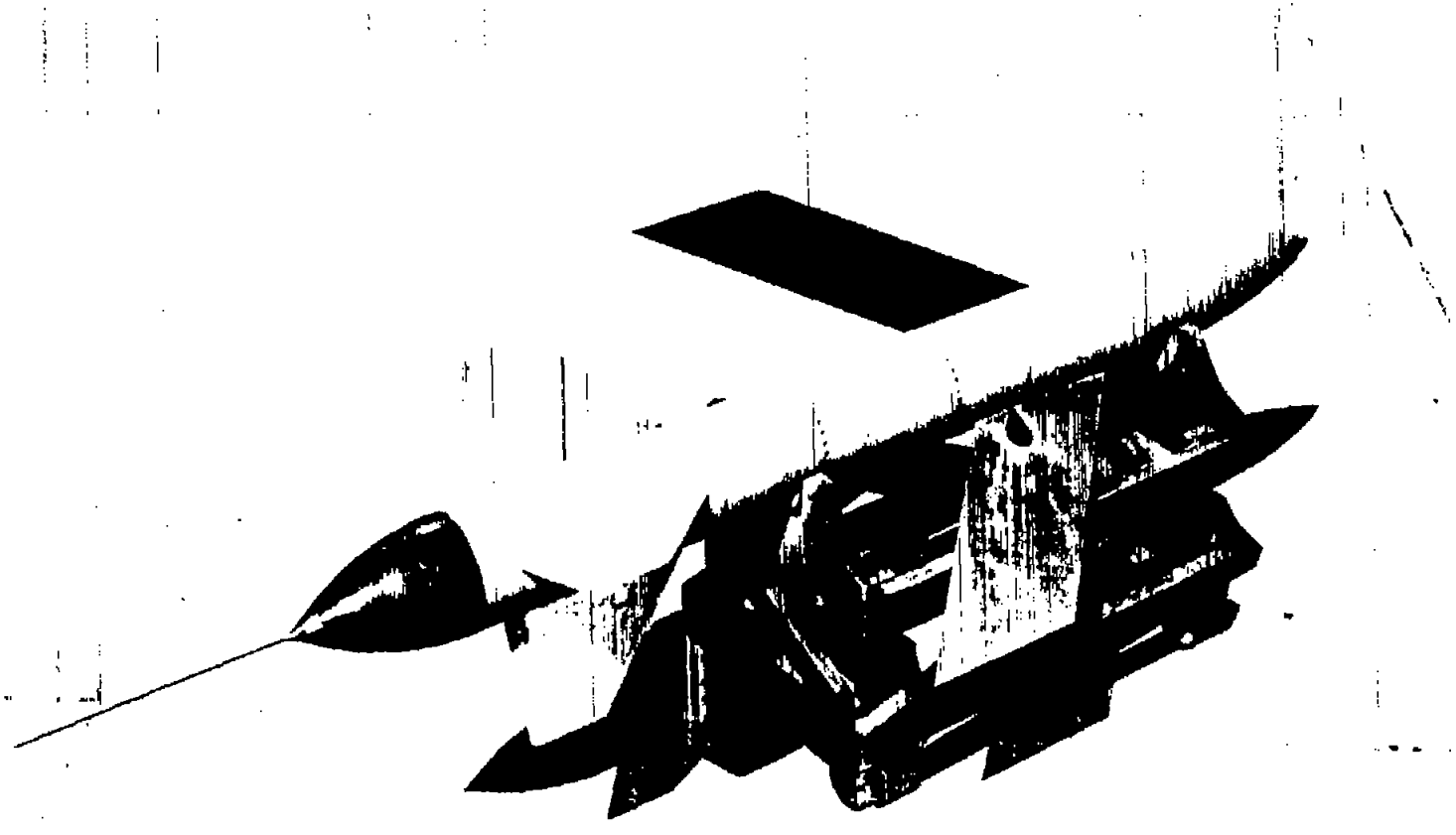

NACA
L-69753

Figure 1.- Photograph of the flutter vehicle.

CONFIDENTIAL

CONFIDENTIAL

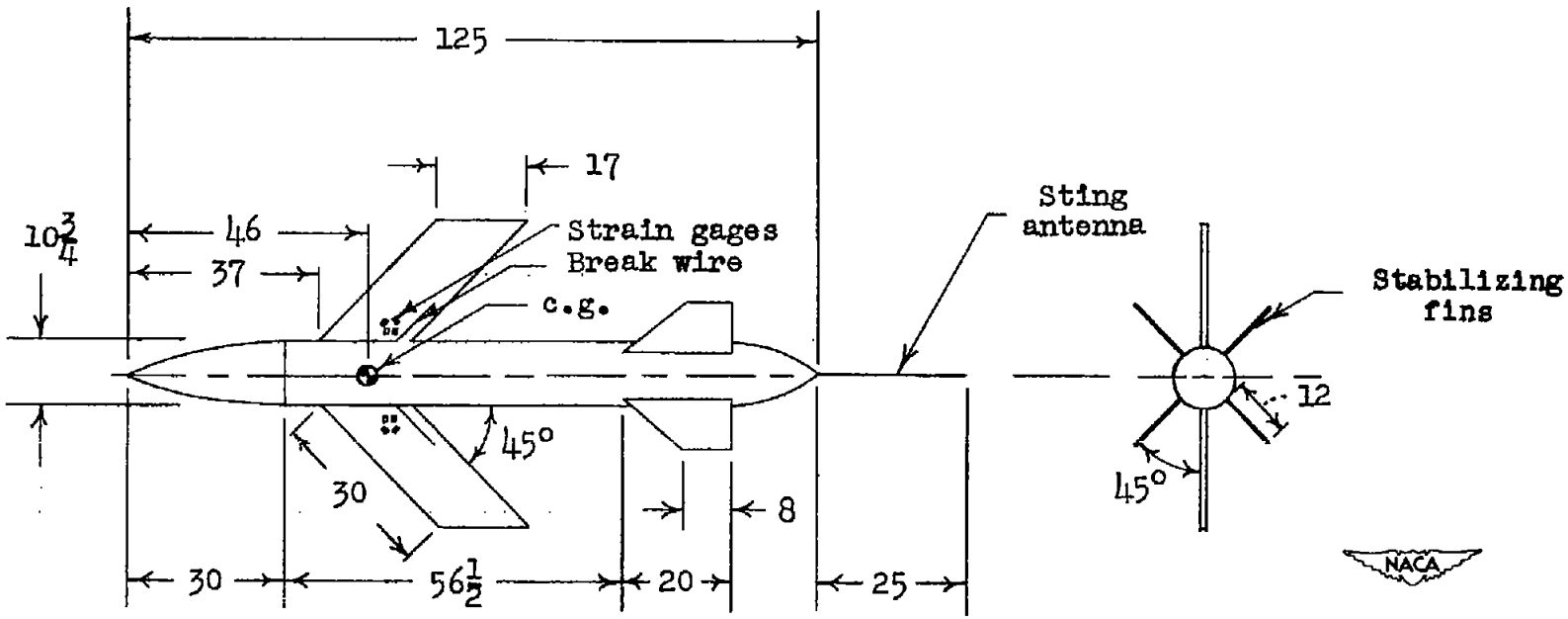

Figure 2.- Dimensional drawing of the flutter vehicle. (All dimensions not otherwise given are in inches.)

CONFIDENTIAL

CONFIDENTIAL

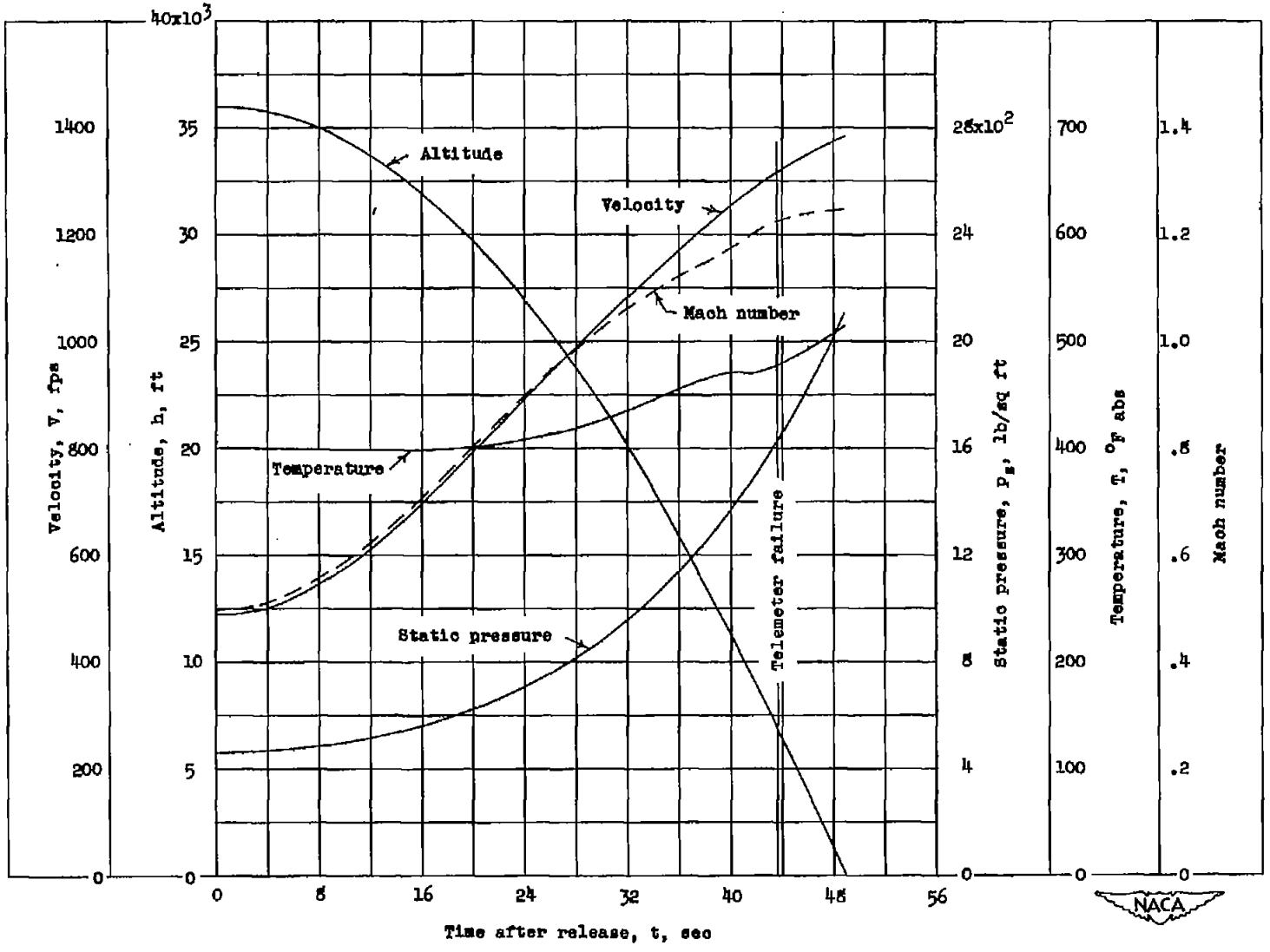

Figure 3.- Time history of fall of the model.

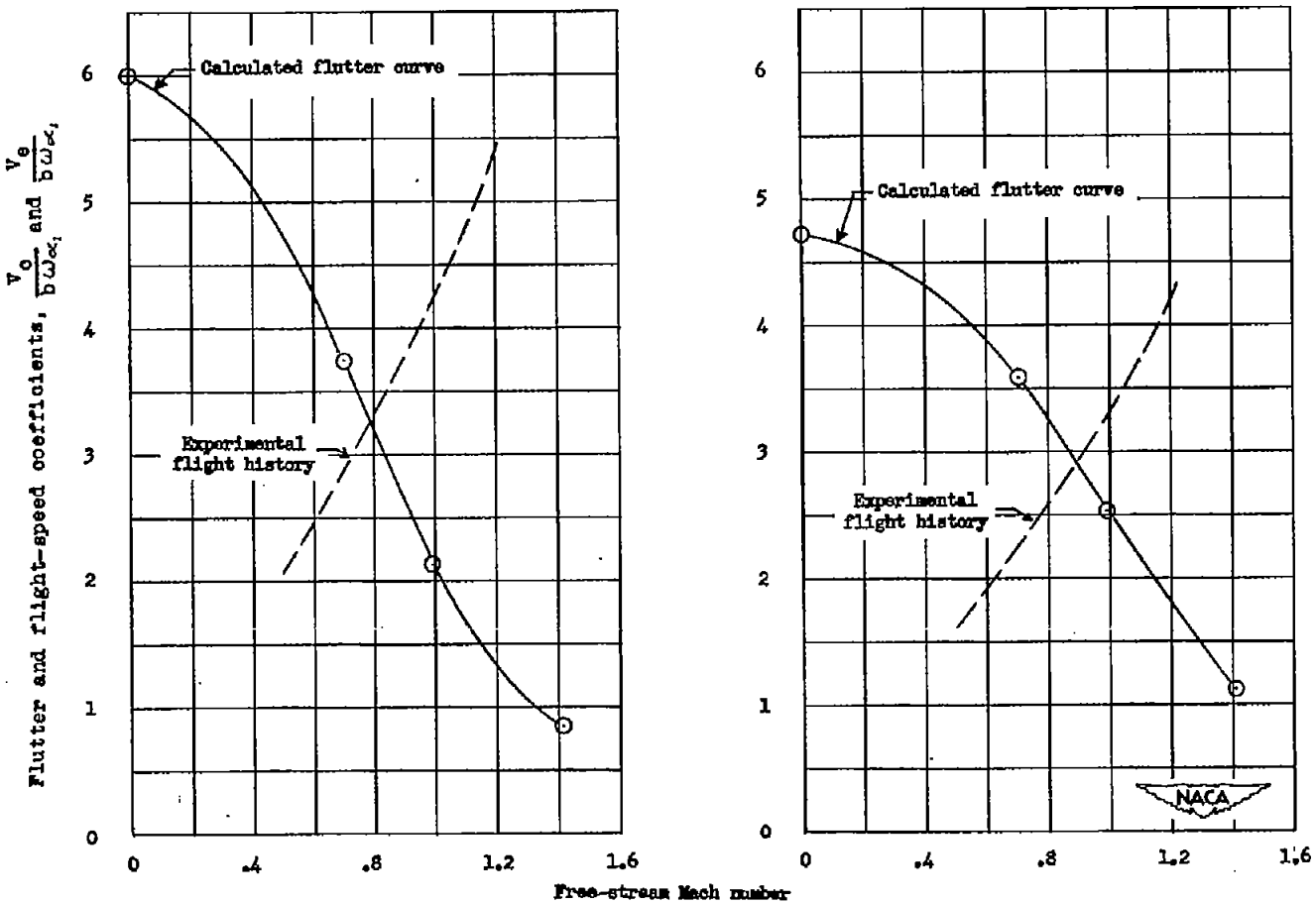

(a) Steel wing; $\left(\frac{1}{\kappa} = 215.8\right)$.

(b) Magnesium wing; $\left(\frac{1}{\kappa} = 62.4\right)$.

Figure 4.- Experimental flight history and variation of theoretical flutter-speed coefficient as a function of Mach number. (ρ of 0.00197 used in calculations.)

NACA-Langley - 26-52 - 350