8935
NACA TN 2549

TECH LIBRARY KAFB, NM
0065493

NATIONAL ADVISORY COMMITTEE FOR AERONAUTICS

TECHNICAL NOTE 2549

INVESTIGATION OF HYDROCARBON IGNITION

By Charles E. Frank and Angus U. Blackham

University of Cincinnati

Washington

January 1952

AFMDC
TECHNICAL LIBRARY
AFL 2811

0065493

NATIONAL ADVISORY COMMITTEE FOR AERONAUTICS

TECHNICAL NOTE 2549

INVESTIGATION OF HYDROCARBON IGNITION

By Charles E. Frank and Angus U. Blackham

SUMMARY

Accurate spontaneous ignition temperatures have been determined for some 50 pure organic compounds. The effects of a wide variety of additives and of eight selected metals on the spontaneous-ignition-temperature values of representatives of this group also have been observed. Results are correlated with chemical structure and with antiknock characteristics where known; more fundamental aspects of the possible chain-breaking and chain-branching reactions involved also are considered.

INTRODUCTION

While considerable data are available on the spontaneous ignition temperatures of organic compounds, there is wide discrepancy between the results of various investigators, and even within the findings of a single investigator. This difficulty is due to the marked sensitivity of the determinations to a large number of variables, as has been pointed out previously (reference 1), and, accordingly, to even minor variations in equipment or procedure. The present study has as its objective: (1) The determination of a large number of spontaneous-ignition-temperature values for selected series of organic compounds of high purity in order to correlate structure with ease of spontaneous flammability, (2) the observation of the effect of metal surfaces and of a variety of additives on the spontaneous-ignition-temperature values of certain hydrocarbons, and (3) the development of sufficient information and theory to permit a more scientific approach to the formulation of fuels and lubricants of reduced spontaneous flammability. This study was made at the Applied Science Research Laboratory of the University of Cincinnati under the sponsorship and with the financial assistance of the National Advisory Committee for Aeronautics.

DESCRIPTION OF APPARATUS

The equipment for this investigation comprised two metal blocks (one stainless steel and one copper) modeled after the apparatus of Sortman, Beatty, and Heron (reference 2). The two blocks gave completely parallel results; however, the copper block was not used at the higher temperatures because of the rapid formation of a heavy copper-oxide layer under those conditions.

A convenient innovation for observing the effects of various metal surfaces has been the use of metal inserts, each consisting of a base plate, sleeve, and lid which are accurately machined to isolate the ignition chamber from the walls of the block. The preheated air enters the ignition chamber through four small openings in the base of the sleeve. The thermocouple is inserted through the base of the block into a recess in the bottom of the base plate of the reaction chamber. Figures 1 and 2 show the details of this block and ignition cup assembly. A hypodermic syringe was used to introduce small droplets of material; a medicine dropper was employed when larger quantities were required.

TEST PROCEDURE

Spontaneous ignition temperatures were determined for a selected series of organic compounds of high purity including n-paraffins, branched paraffins, α-olefins, aromatic hydrocarbons, alcohols, ethers, and esters. The methods of purification and the physical properties of these compounds are given in table I.

To determine the spontaneous ignition temperature, the electric furnace is heated rapidly to the desired temperature range of operation. Then the furnace rheostat is adjusted so the furnace will cool at a desired rate. One drop of the material to be tested is introduced into the ignition chamber. If an ignition occurs the induction period is recorded (measured with a stop watch); also recorded is the temperature of the chamber just prior to the addition of the drop. If no ignition occurs this procedure is repeated with two or more drops after a time interval of at least 2 minutes to allow the oxidized gases to be flushed out by the incoming air. As the furnace cools this procedure is repeatedly followed, using more drops when necessary to effect the ignition, until a temperature is reached where no amount of material added will result in an ignition. The temperature of the preceding ignition is taken as the spontaneous

ignition temperature. In this lower range the rate of cooling is reduced by approximately 1° C per 2 to 5 minutes so that the spontaneous ignition temperature can be observed to the nearest degree.

The rate of air flow most generally used in these experiments has been 125 cubic centimeters per minute. At this rate, the ignition chamber is flushed out during the 2-minute time interval between additions. In some experiments, a 25-cubic-centimeter-per-minute rate of flow was used. Here it was necessary to increase the air flow after each ignition to flush the chamber, and then to readjust the rate to 25 cubic centimeters per minute at the end of the 2-minute time interval. The 25-cubic-centimeter-per-minute air rate gave readings that were generally some 3° to 8° C lower than the 125-cubic-centimeter-per-minute rate (see tables II and III).

Three different types of oxidation phenomena have been observed and classed as ignitions in determining the spontaneous ignition temperature:

(1) A visible flame or flash, blue or yellow in color

(2) A visible glow within the chamber, usually green or blue (sometimes yellow) which may or may not be followed by a puff of smoke ("cool flame" ignition)

(3) A definite puff of smoke after a reasonable induction period

The last two types are usually only observed at the spontaneous ignition temperature and temperatures slightly above. In this range the optimum fuel-air ratio to produce a flame is quite sensitive; if slightly exceeded, a glow or puff of smoke results instead of the flame.

For the hydrocarbons, alcohols, and olefins, the maximum amount required to effect an ignition was 30 to 40 milligrams (10 drops) at the spontaneous ignition temperature; the induction period was 30 to 60 seconds. The addition of larger than 40-milligram quantities of material did not lower the spontaneous ignition temperature more than a degree or two.

For the ethers, it was necessary to add much larger amounts of material to produce an ignition in the temperature range just above the spontaneous ignition temperature. The induction period remained quite short in this range and, even at the spontaneous ignition temperature, it was only 8 to 12 seconds. Apparently the large amount of material was needed so that a high ether concentration in the vapor phase could be achieved very soon after the addition; otherwise, on addition of a smaller amount of material, the rate of oxidation would be faster than the rate of vaporization and, accordingly,

sufficient concentration of ether for normal ignition could not be attained. The maximum amount of any ether added at the spontaneous ignition temperature was 100 milligrams (in the case of didecyl ether). Because of the very short induction period with the ethers, the material was added all at once rather than dropwise.

For some aromatic compounds tested the optimum amount of material for ignition did not exceed 3 to 5 drops (about 9 to 15 mg) even at the spontaneous ignition temperature. More than this amount failed to give ignition in the range just above the spontaneous ignition temperature. This probably results from a rapid rate of vaporization which volatilizes the material before the rate of oxidation becomes significant.

PRECISION

Spontaneous-ignition-temperature readings below 300° C have been reproducible generally within 1° C; at higher temperatures the accuracy is in the range of 3° to 5° C. The temperature actually observed (at thermocouple in recess of base plate) agrees within not more than 2° C with the temperature at the surface of the base plate where ignition would be expected to occur; in the lower range, this agreement is within 1° C. To obtain a complete picture of the heat distribution throughout the ignition chamber, thermocouples were placed in other parts of the ignition assembly and observations were made at various temperatures during both heating and cooling periods. These results are summarized in figure 3. The temperature differentials observed are probably somewhat higher than those in actual operation, since insertion of the thermocouples necessitated some break in the thermal contact of the parts of the ignition cup assembly. It is of interest to note that the temperature differentials observed here are considerably less than those recently reported for the A.S.T.M. apparatus (reference 3).

RESULTS AND DISCUSSION

Spontaneous Ignition Temperatures of Pure Compounds in Stainless-Steel Chamber

n-Paraffins.- At an air rate of 125 cubic centimeters per minute, the spontaneous ignition temperature of a series of normal paraffins in the C_{10} to C_{20} range all were found to fall within an 8° range from 232° to 240° C (see table III and fig. 4). As the lower limit of ignition

was approached, it was necessary to increase the fuel-air ratio to attain these minimum values and, with the higher hydrocarbons, a lengthening of the induction period was observed. The latter would be expected on the basis of reduced volatility. The closeness of these values and the obvious effect of fuel-air ratio tends to obscure any trend in the ignition temperatures for this series of hydrocarbons. However, it appears likely that a similar, but much slighter, decrease in spontaneous ignition temperature occurs with increasing chain length as has been observed with the lower members of the series. With increasing chain length, this slight trend is counterbalanced by the decreasing volatility and accompanying reduction in fuel-air ratio.

Further indication of this is found in an additional series of results on the same hydrocarbons obtained at an air-flow rate of 25 centimeters per minute. Here, with the higher possible fuel-air ratios, a downward trend is noted in progressing from decane to hexadecane. Above hexadecane, however, the reduced volatility dominates, and a gradual rise in the observed spontaneous ignition temperature occurs. The expectation that hexadecane (cetane) should show a somewhat lower spontaneous ignition temperature than, for example, dodecane is in line with observed cetane numbers. Under conditions where vaporization is rapid, the cetane number of dodecane is 80, that of hexadecane (by definition) is 100 (reference 4). It is known, of course, that the cetane number is inversely related (at least qualitatively) to the octane number and accordingly to the spontaneous ignition temperature.

Branched paraffins.- Spontaneous-ignition-temperature values have been determined for a series of branched paraffins comprising isooctane, 2-methyldecane, and four branched decanes. A single branch near the end of a hydrocarbon chain of moderate length appears to have little or no effect; thus the spontaneous ignition temperature of 3-ethyloctane is the same as that of n-decane, while the spontaneous ignition temperature of 2-methyldecane is very close to those of n-decane and n-dodecane. More extensive branching, however, leads to a considerable increase in the spontaneous-ignition-temperature value as is evidenced by the data for isooctane and the three decanes, 4-isopropylheptane, 4,5-dimethyloctane, and 2,5,5-trimethylheptane. The most highly branched, isooctane and 2,5,5-trimethylheptane, have spontaneous-ignition-temperature values more than 200° C higher than that of n-decane (see table III); the other two have spontaneous-ignition-temperature values some 40° to 150° C higher than that of n-decane, dependent not only on structure but also on air-flow rate.

Arrangement of this group of paraffins in order of their relative spontaneous-ignition-temperature ratings corresponds to the arrangement which would be predicted for their relative octane ratings (reference 5, particularly fig. 22). In other words, these spontaneous-ignition-temperature values follow the general rule of octane numbers (reference 5)

that the value within a given series of isomeric paraffins decreases with increase in the length of the chain uninterrupted by branching. It is significant that Cullis and Mulcahy (reference 6) also have reported that the ease of oxidation of a hydrocarbon is a function of the length of the unbranched alkyl chain. The primary importance of the length of the uninterrupted chain to ease of oxidation is illustrated by the following data of Cullis and Mulcahy (taken from reference 6) on relative rates of oxidation:

Paraffin structure	Relative oxidation rate
C-C-C-C-C-C	1590
C-C-C-C-C | C	560
C-C-C-C-C | C	60
C | C-C-C-C | C	12
C-C-C-C- | | C C	1

The magnitude of the effect of increasing chain length on octane rating also is very great; as pointed out by Lovell (reference 5), the change in going from propane to hexane is greater than the whole octane number scale.

It is of interest to consider the spontaneous-ignition-temperature values of these branched paraffins in the light of figures 5 and 6, which show the variation in spontaneous ignition temperature and nonignition zone with variation in composition of cetane and α-methylnaphthalene and heptane and isooctane mixtures. It is most probable that similar curves would be obtained on plotting the spontaneous ignition temperature against degree of branching for a given series of isomeric paraffins. Visualized in this manner, the large difference between the spontaneous-ignition-temperature values of 4,5-dimethyloctane at air-flow rates of 125 and

25 cubic centimeters per minute (table III) becomes reasonable. It would appear that 4,5-dimethyloctane can undergo ignition by the low-temperature mechanism if conditions are right; otherwise (e.g., with too lean a fuel-air ratio) the low-temperature ignition does not occur and the spontaneous ignition temperature accordingly occurs on the upper region of the ignition curve.

α-Olefins.- The straight-chain α-olefins examined from 1-decene to 1-octadecene all have higher spontaneous-ignition-temperature values than the normal paraffins (see table III). This is in line with their higher antiknock values, and both phenomena are explicable on the basis of the greater ease with which the olefins undergo free-radical attack and the correspondingly greater stability (lower reactivity) of the resultant peroxides or intermediate radicals formed. Here, a definite trend toward lower spontaneous-ignition-temperature values with increasing molecular weight is apparent. The reason for this is undoubtedly the lessening contribution of the effect of the double bond as the saturated hydrocarbon portion of the molecule increases.

The observed lessening contribution of the double bond to an increase in spontaneous ignition temperature as the molecular weight increases is completely parallel to the knock characteristics of α- and β-olefins (reference 5). While the present report includes results only on the straight-chain α-olefins, it is probable that centralization of the double bond will effect some increase in the spontaneous ignition temperature.

In discussing the knock problem, Badin (reference 7) proposes that olefins behave as antiknocks because of their ready ability to form peroxides and thereby to act as chain initiators. The spontaneous-ignition-temperature data, however, are evidence for the more prevailing theory (outlined by Walsh in the "Discussion" following reference 7) that antiknock action is the result of chain inhibition rather than chain initiation.

Aromatic hydrocarbons.- Almost all aromatic hydrocarbons boiling in the gasoline range have octane ratings above 100 and correspondingly high spontaneous-ignition-temperature values. Spontaneous-ignition-temperature values have been determined for a series of nine aromatic hydrocarbons to obtain more accurate information regarding the effect of alkyl substituents and regarding the correlation between spontaneous ignition temperature and

antiknock performance (see table III). The following data show a striking parallel between spontaneous ignition temperature and compression ratio:

Compound	Spontaneous ignition temperature (°C) (1)	Critical compression ratio (2)
p-Xylene	657	11.5
m-Xylene	652	11.5
Benzene	645	Approx. 12
Toluene	635	11.3
1,3,5-Trimethylbenzene	577	10.6
o-Xylene	551	8.3
1,2,4-Trimethylbenzene	528	8.7
1,2,3-Trimethylbenzene	510	7.9

[1]Data taken from table III for air-flow rate of 125 cm^3/min.
[2]Data taken from reference 5.

As the chain length of the alkyl substituents increases, the spontaneous-ignition-temperature value rapidly falls. Thus, the triethylbenzenes ignite about 100° C below the trimethylbenzene (table III); similarly, the critical compression ratio of n-butylbenzene is below 7 while that of ethylbenzene is above 8 (reference 5). More data as to the behavior of higher alkylbenzenes are available from studies of Diesel fuels. Puckett and Caudle (reference 4) note that acceptable cetane numbers (i.e., low octane numbers) are observed only in alkylbenzenes possessing more than 16 carbon atoms; in addition, it is important that these possess long side chains with little or no branching.

Alcohols.- As has been observed previously, the alcohols possess higher spontaneous-ignition-temperature values than the corresponding paraffins just as they possess higher antiknock values. As with the olefins, the reason for this would appear to be the formation of less energetic radicals, in this case, $R\dot{C}HOH$. The continuous drop in spontaneous ignition temperature as one progresses from decanol to octadecanol

2T

again reflects the decreasing effect of the functional group as the paraffinic portion of the molecules increases (see table III). The lower alcohols, ethyl, isopropyl, and n-propyl, all possess much higher spontaneous-ignition-temperature values than the long-chain alcohols, the isopropyl possessing a value some 50° C higher than the n-propyl. These data are in accord with expectations, but it is not apparent why the value for ethyl alcohol should fall below rather than above that of n-propyl alcohol.

Ethers.- Spontaneous-ignition-temperature values have been determined for five ethers: diethyl, diisopropyl, dihexyl, dioctyl, and didecyl (see table III). Except for the diisopropyl ether, these show extremely low spontaneous-ignition-temperature values in contrast with the behavior of the olefins which also are easily peroxidizable. A probable explanation is that attack on the ether yields initially an $R\text{-}O\text{-}\dot{C}H\text{-}R'$ radical, which then decomposes into $R'\text{-}CHO$ and R (reference 8); the initial radical from an olefin is stable and of relatively low reactivity. It is significant that the odor of acetaldehyde is quite distinct on ignition of diethyl ether. The known low spontaneous-ignition-temperature values of aldehydes (reference 9) together with the high reactivity of an n-alkyl radical are in line with this explanation. The short induction period of the ethers (also noted by Chamberlain and Walsh, reference 10) similarly would be expected on the basis of such a chain-branching process.

With n-ethers of increasing molecular weight, the effect of the ether linkage decreases, which is analogous to the results obtained with the olefins and ethers. Here, however, the trend toward the spontaneous-ignition-temperature range of the n-paraffins causes a rise in spontaneous ignition temperature with increasing molecular weight instead of the fall observed with the olefins and alcohols.

The extremely high spontaneous-ignition-temperature value of diisopropyl ether is a striking example of the effect of branching on spontaneous ignition. Oxidative attack would be expected to yield the initial radical, $CH_3\text{-}\underset{\underset{CH_3}{|}}{\dot{C}}\text{-}O\text{-}\underset{\underset{CH_3}{|}}{C}H\text{-}CH_3$, which by analogy with the above decomposition should yield acetone and the isopropyl radical. Both these fragments are less reactive than the aldehyde and n-alkyl fragments from an n-alkyl ether. Accordingly, ignition does not occur until the temperature reaches the zone of pyrolysis which is above 450° C (reference 10); in this region, tremendous chain-branching potentialities are released and explosive ignition occurs.

Esters.- Excellent spontaneous-ignition-temperature values have been recorded in literature for a considerable number of high-boiling dicarboxylic esters (reference 11); the procedure and apparatus used were similar to that employed in the present work. Spontaneous-ignition-temperature

values of a number of these same compounds have been repeated here in order to obtain an idea of the degree of consistency between the two investigations. Results are listed in table III. Although values obtained from this investigation were some 10° to 20° C lower than those of reference 11, the general agreement was much better than that with most other spontaneous-ignition-temperature observations. The consistently lower readings of the present work can be attributed largely to the method of observation. These readings have been taken as the furnace cools, while those of Bried, Kidder, Murphy, and Zisman were taken as the furnace heated. It was observed that the two procedures do give a difference in values of this order of magnitude. This difference probably is caused by an "activation" of the wall surface at higher temperatures which persists through an approximate 10° C range; such effects have been observed in other oxidation reactions (for example, see reference 12).

The relatively high spontaneous-ignition-temperature values of an ester apparently result from the formation of an inactive radical ($R\dot{C}HCOOR'$) which is unable to propagate the cool flame process. It is of interest to note that results obtained herein with the 1-ethylpropyl esters of adipic, azelaic, and sebacic acids show the expected decrease in spontaneous-ignition-temperature value with increasing length of the uninterrupted hydrocarbon chain. The presence of relatively long alkyl groups as in di(2-ethylhexyl) adipate produces a somewhat larger drop in the spontaneous-ignition-temperature value just as would be predicted.

Correlation of Spontaneous Ignition Temperature with Octane and Cetane Ratings

The good agreement between spontaneous ignition temperature and antiknock ratings has been previously noted (reference 9). However, the data on the various types of compounds listed in the preceding section show a more nearly quantitative relationship between spontaneous ignition temperature and critical compression ratio than has been previously demonstrated. This is most apparent from the results listed for the aromatic hydrocarbons and the branched-chain paraffins (see previous section).

It was of interest to determine also how the spontaneous-ignition-temperature values of isooctane and heptane mixtures would correlate with the octane numbers. These values are listed in the following table,

Composition isooctane:heptane	Spontaneous ignition temperature (°C) (1)	Octane number
100:0	515	100
80:20	485	80
50:50	308	50
20:80	277	20
0:100	250	0

[1]Data taken at air-flow rate of 125 cm^3/min. See fig. 5.

and a more complete picture of the results is contained in figure 5. These show most strikingly the sensitivity of the nonignition zone to composition and the manner in which this zone may cause a radical change in the observed spontaneous-ignition-temperature value with only a slight change in conditions. A compound or mixture, for example, having the ignition characteristics of a 1:1 isooctane and heptane mixture would show a spontaneous-ignition-temperature value of 308° C under one set of conditions and a spontaneous-ignition-temperature value of 434° C at a perhaps slightly lower fuel-air ratio.

A similar but inverse relationship exists between spontaneous ignition temperature and cetane number; thus, a bomb ignition apparatus has been used as an indication of the approximate cetane number where only small quantities of compounds were available (reference 4). The bomb employed approaches actual conditions of Diesel operation, however, and it was of interest to determine how well spontaneous-ignition-temperature values obtained with the apparatus of the present investigation would correlate with cetane ratings. A relationship between spontaneous ignition temperature and cetane rating equally as good as that observed between spontaneous ignition temperature and octane rating is shown in the following table:

Compound	Spontaneous ignition temperature (°C) (1)	Cetane number (2)
n-Hexadecane	232	100
n-Dodecane	232	80
n-Heptane	250	57
1-Hexadecene	253	88
1-Tetradecene	255	79
2,2,4-Trimethylpentane	515	12
α-Methylnaphthalene	553	0
Toluene	635	-5

[1]Data taken from table III for air-flow rate of 125 cm^3/min.
[2]Data taken from reference 4.

A similar comparison was made of spontaneous-ignition-temperature values and cetane numbers of several cetane and α-methylnaphthalene mixtures. These results are summarized in the following table and in

Composition, cetane: α-methylnaphthalene	Spontaneous ignition temperature (°C) (1)	Cetane number
100:0	232	100
80:20	254	80
50:50	275	50
20:80	310	20
0:100	553	0

[1]Data taken at air-flow rate of 125 cm^3/min. See fig. 6.

figure 6. As in the case of the octane ratings of isooctane and heptane mixtures, excellent qualitative correlation is obtained. However, here again the marked variation of the nonignition zone with composition is apparent (fig. 6); thus, with a mixture containing about 20 percent

hexadecane, a 5-percent change in composition can change the spontaneous-ignition-temperature value by more than 200° C.

Effect of Metal Surfaces on Spontaneous Ignition Temperature

One of the objectives of this work has been to determine the effect of the various metals used in aircraft construction on the spontaneous ignition temperature of hydrocarbons. This has been done by completely enclosing the ignition chamber in the metal to be observed as is illustrated in figure 2.

Results are summarized in tables II and IV. Surprisingly, a change in the metal surface had substantially no effect on the spontaneous-ignition-temperature value of most compounds which undergo spontaneous ignition below 290° C. This is apparent from an examination of table IV, where the compounds listed include three normal paraffins, two straight-chain α-olefins, two straight-chain normal alcohols, and one straight-chain ether. The condition of the metal surface also appeared to have little or no effect on these spontaneous-ignition-temperature values (table II).

With compounds possessing high spontaneous-ignition-temperature values, the catalytic effect of the metal surface becomes pronounced. While it has not been possible in the present investigation to study a large number of compounds with all these metal surfaces, the information in table II demonstrates quite clearly the importance of that surface at the higher temperatures. This table lists results obtained on five compounds employing a stainless-steel cup pretreated in several ways; also contained is a comparison of results at two air-flow rates. As mentioned earlier, neither the condition of the metal nor the air-flow rate had any substantial effect on the low spontaneous-ignition-temperature value of cetane. With those compounds of high spontaneous-ignition-temperature values, the difference between a heavily oxidized and a bright metal surface may amount to well over 50° C. This fact proves extremely troublesome in determining reproducible spontaneous-ignition-temperature values for materials which ignite at these high temperatures; under these conditions the metal surface is rapidly oxidized and must be cleaned frequently - otherwise, the spontaneous-ignition-temperature value observed will rise progressively, as is apparent from the data listed for p-xylene.

The only additional data on the effect of metal surfaces on compounds of relatively high spontaneous-ignition-temperature values comprise some observations of the spontaneous ignition temperature of 4-isopropylheptane in four different clean metal cups. Results are summarized in the following table. The differences observed here

Metal	Spontaneous ignition temperature (°C) (1)
Inconel	257
Copper	256
Stainless steel	288
Aluminum alloy	281

[1]Data taken at air-flow rate of 125 cm^3/min.

demonstrate appreciably different catalytic activity of the various metals at higher temperatures; more basically, these observed differences probably result from shifts in the zone of nonignition. As Mulcahy has pointed out (reference 13), such a zone represents the transition stage between the low-temperature mechanism of oxidation (peroxide intermediates, with hydrocarbon structure having a marked effect) and the high-temperature mechanism (simple radical intermediates, with structural effects largely leveling off).

On the basis of the limited data now available, the following possible effects of metal surfaces on spontaneous-ignition-temperature values are suggested:

(1) Compounds having long, unbranched alkyl groups readily ignite by a low-temperature mechanism involving an autocatalytic chain reaction. Metal surfaces have little effect on these spontaneous-ignition-temperature values.

(2) Compounds, such as certain branched paraffins, having borderline ability to ignite by the low-temperature mechanism, may be susceptible to the catalytic effect of a metal to promote the low-temperature mechanism, and may therefore undergo a large drop in spontaneous-ignition-temperature value.

(3) Compounds which cannot oxidize by the low-temperature mechanism and which therefore ignite only at temperatures where pyrolysis is appreciable may show considerable variation in spontaneous ignition temperature with change in metal surface because of the catalytic effect of the metal on the pyrolysis.

Nonignition Zone

The existence of zones of nonignition has been observed repeatedly in the past as well as in the present work. Some compounds show two such zones in the cool flame region, for example, diisopropyl ether (reference 10). As has been previously mentioned, the best explanation for this phenomenon identifies the zone of nonignition with that temperature range where the low-temperature mechanism of oxidation has faded out and the high-temperature mechanism has not yet begun (reference 13). This is in accord with the fact that only compounds which can oxidize by both high- and low-temperature mechanisms exhibit this phenomenon; for example, methane which does not oxidize by the low-temperature mechanism shows no nonignition zone.

In the present investigation of the C_{10} to C_{20} n-paraffins, this zone has been observed within the 280° to 380° C range. It is not surprising that a reproducible zone of nonignition is obtained only under the most rigidly controlled conditions. For example, at an air flow of 125 cubic centimeters per minute in the equipment used, hexadecane showed a sharp nonignition zone between 283° and 322° C, using a hydrocarbon charge of 10 milligrams. On increasing the hydrocarbon charge (thereby increasing the fuel-air ratio) to 35 milligrams, ignition was obtained throughout the 283° to 322° C range. In general, increase in the fuel-air ratio narrowed the zone of nonignition, although it was not always possible to completely eradicate this zone as in the case of hexadecane. Figure 7 illustrates the ignition behavior of a group of n-paraffins in some detail.

As mentioned earlier, figures 5 and 6 are interesting illustrations of zones of nonignition for two hydrocarbon mixtures, isooctane and heptane and cetane and α-methylnaphthalene. With less than 50 or 20 percent of the n-paraffin component, respectively, the mixtures do not ignite by the low-temperature mechanism; both show high spontaneous-ignition-temperature values and the absence of any nonignition zone. Above 50 percent (or 20 percent) of the n-paraffin component, ignition by the low-temperature mechanism can occur and, accordingly, the mixtures possess "double ignition zones" and the intermediate zones of nonignition.

Metal catalysts appear to have a major effect on the zone of nonignition. While data on this are very limited, it would be expected that the zone of nonignition would be narrowed by lowering the initiation threshold of high-temperature reaction, as suggested in the preceding section. In some instances this action may result in completely "blotting out" the nonignition zone.

Effect of Additives on Spontaneous Ignition Temperatures of n-Paraffins

Some 65 compounds have been tested at concentrations of 5 mole percent for their effects on the spontaneous ignition temperature of n-dodecane; these results are summarized in table V. It appears that only the most powerful antiknocks (i.e., compounds capable of inhibiting chain reactions in the cool flame region) can have any major effect on the spontaneous-ignition-temperature values of an ordinary (largely paraffinic) lubricating oil at relatively low concentrations. At 1-percent concentration, tetraethyl lead raises the spontaneous ignition temperature of n-dodecane by 200° to 300° C, depending on the fuel-air ratio. The largest effect of any of the more usual inhibitors of free-radical reactions was an increase of approximately 40° C observed with the three amines, ethyl-o-toluidine, diphenylamine, and N-methylaniline at 5-mole-percent concentration; this again correlates with the effects of amine additives on octane ratings (reference 14).

Aside from tetraethyl lead and amines, compounds tested included phenols, aromatic hydrocarbons, carbonyl compounds, halogen compounds, alcohols, and a number of miscellaneous materials. The phenols had surprisingly small effects; the aromatic hydrocarbons were substantially ineffective, as were also the carbonyl compounds, halogenated hydrocarbons, alcohols, and ethers tested. Di-tert-butyl peroxide gave the only major drop in spontaneous ignition temperature. These results illustrate the remarkable effectiveness of metallic atoms as chain-reaction inhibitors; they also are good evidence that the lead, rather than ethyl radicals, contributes the antiknock properties to tetraethyl lead. It is of interest that the valence state of the metal appears to be critical; thus, none of the metal naphthenates (lead, manganese, iron, cobalt, or calcium) had any substantial effect on the spontaneous ignition temperature of dodecane.

While it is unlikely that the addition of a nonmetallic inhibitor in small amounts to a 100 percent paraffinic oil can raise the spontaneous ignition temperature markedly, figures 5 and 6 do suggest the following probability: A lubricating oil blend showing the ignition characteristics of a 1:1 isooctane and heptane mixture should show a marked susceptibility to the effects of even an amine additive, which might thereby raise the spontaneous ignition temperature as much as 300° C.

SUMMARY OF RESULTS

Spontaneous ignition temperatures were determined for a series of pure organic compounds. From an investigation of the effect of a

variety of additives and metal surfaces on these temperatures and from correlations with chemical structure and antiknock characteristics, the following results were obtained:

1. Spontaneous ignition temperatures have been determined accurately for over 50 organic compounds including paraffins, olefins, aromatic hydrocarbons, ethers, alcohols, and esters. Previous observations regarding the effect of structure on spontaneous ignition temperature have been confirmed and extended.

2. Excellent correlation has been observed between spontaneous ignition temperature and antiknock ratings for pure compounds and for isooctane and heptane or cetane and methylnaphthalene mixtures. Factors leading to high octane (or low cetane) ratings have been shown to lead to correspondingly high spontaneous ignition temperatures; a particularly important factor is the length of the uninterrupted hydrocarbon chain.

3. The catalytic effects of eight metals or alloys commonly employed in aircraft construction have been shown to be substantially negligible on the spontaneous-ignition-temperature values of compounds which ignite below approximately 290° C. With compounds possessing higher spontaneous-ignition-temperature values, the catalytic effect of the metal becomes quite pronounced, being most apparent in the zone of nonignition. A number of tentative conclusions regarding these variable catalytic effects have been proposed.

4. The sensitivity of the nonignition zone to such factors as fuel-air ratio, metallic surface, and composition (for mixtures) has been observed. The important effect of slight shifts in this zone on the observed spontaneous ignition temperature for certain compounds and mixtures has been demonstrated.

5. The effects of a large number of additives (5 mole percent) on the spontaneous ignition temperature of n-dodecane have been determined. Of the strictly organic materials, aromatic amines had the largest effect; none of these, however, compared with the effect of adding small amounts of tetraethyl lead, which raised the spontaneous ignition temperature some 200° to 300° C. There is good evidence, however, that blended lubricants may be developed which possess borderline ability to ignite spontaneously at low temperatures; these should be satisfactorily susceptible to the amine additives.

Applied Science Research Laboratory
University of Cincinnati
Cincinnati, Ohio, January 23, 1951

REFERENCES

1. Sullivan, M. V., Wolfe, J. K., and Zisman, W. A.: Flammability of the Higher Boiling Liquids and Their Mists. Ind. and Eng. Chem., vol. 39, no. 12, Dec. 1947, pp. 1607-1614.

2. Sortman, C. W., Beatty, H. A., and Heron, S. D.: Spontaneous Ignition of Hydrocarbons. Ind. and Eng. Chem., vol. 33, no. 3, March 1941, pp. 357-360.

3. Scott, G. S., Jones, G. W., and Scott, F. E.: Determination of Ignition Temperatures of Combustible Liquids and Gases. Analytical Chem., vol. 20, no. 3, March 1948, pp. 238-241.

4. Puckett, A. D., and Caudle, B. H.: Ignition Qualities of Hydrocarbons in Diesel-Fuel Boiling Range. Information Cir. No. 7474, Bur. Mines, U. S. Dept. Interior, July 1948.

5. Lovell, Wheeler G.: Knocking Characteristics of Hydrocarbons. Ind. and Eng. Chem., vol. 40, no. 12, Dec. 1948, pp. 2388-2438.

6. Cullis, C. F., and Mulcahy, M. F. R.: The Slow Oxidation of Hydrocarbons. Rev. Inst. Français Petrole, vol. 4, no. 7, July 1949, pp. 283-287. Chem. Abstracts, vol. 44, no. 15, 1950, p. 6805.

7. Badin, Elmer J.: Oxidation of Metal Alkyls and Related Compounds – The Oxidation of Hydrocarbons. Third Symposium on Combustion, Flame and Explosion Phenomena, Williams & Wilkins Co. (Baltimore), 1949, pp. 386-389.

8. Chamberlain, G. H. N., and Walsh, A. D.: Processes in the Vapour Phase Oxidation of Ethers. III. Third Symposium on Combustion, Flame and Explosion Phenomena, Williams & Wilkins Co. (Baltimore), 1949, pp. 375-382.

9. Helmore, W.: The Science of Petroleum. Vol IV. Oxford Univ. Press (London), 1938, pp. 2970-2975.

10. Chamberlain, G. H. N., and Walsh, A. D.: Processes in the Vapour Phase Oxidation of Ether. II. Third Symposium on Combustion, Flame and Explosion Phenomena, Williams & Wilkins Co. (Baltimore), 1949, pp. 368-374.

11. Bried, E. M., Kidder, H. F., Murphy, C. M., and Zisman, W. A.: Synthetic Lubricant Fluids from Branched-Chain Diesters. Ind. and Eng. Chem., vol. 39, no. 4, April 1947, pp. 484-491.

12. Cullis, C. F., Hinshelwood, C. N., Mulcahy, M. F. R., and Partington, R. G.: Labile Molecules in Kinetics of Hydrocarbon Reactions. Discussion No. 2, Faraday Soc., 1947, pp. 128-132.

13. Mulcahy, M. F. R.: The Oxidation of Hydrocarbons. Trans. Faraday Soc., vol. XLV, pt. 6, June 1949, pp. 537-541.

14. Boyd, T. A.: Relative Effects of Some Nitrogen Compounds upon Detonation in Engines. Ind. and Eng. Chem., vol. 16, no. 9, Sept. 1924, pp. 893-895.

15. Shepard, A. F., Henne, A. L., and Midgley, T., Jr.: Physical Properties of the Normal Paraffin Hydrocarbons, Pentane to Dodecane. Jour. Am. Chem. Soc., vol. 53, no. 5, 1931, pp. 1948-1958.

16. Forziati, Alphonse F., and Rossini, Frederick D.: Physical Properties of Sixty API-NBS Hydrocarbons. Res. Paper RP2038, Jour. Res., Nat. Bur. Standards, vol. 43, no. 5, Nov. 1949, pp. 473-476.

17. Deansely, R. M., and Carleton, L. T.: Physical Constants of the Normal Paraffin Hydrocarbons. Jour. Phys. Chem., vol. 45, no. 7, Oct. 1941, pp. 1104-1123.

18. Heilbron, I. M.: Dictionary of Organic Compounds. Oxford Univ. Press (New York), 1943.

19. Egloff, Gustav: Physical Constants of Hydrocarbons. Am. Chem. Soc. Monograph Ser. No. 78, Reinhold Pub. Corp. (New York), 1939.

20. Wibaut, J. P., and Geldof, H.: Accurate Values of the Specific Gravities and the Refractive Indexes of a Series of Alkenes with Terminal Double Bond. Recueil travaux chim. Pays-Bas et Belgique, vol. 65, 1946, pp. 125-126. Chem. Abstracts, vol. 40, no. 14, 1946, p. 3952.

21. Forziati, Alphonse F.: Refractive Index as a Function of Wavelength for Sixty API-NBS Hydrocarbons. Res. Paper RP2085, Jour. Res., Nat. Bur. Standards, vol. 44, no. 4, April 1950, pp. 373-385.

22. Thompson, N. J.: Auto-Ignition Temperatures of Flammable Liquids. Ind. and Eng. Chem., vol. 21, no. 2, Feb. 1929, pp. 134-139.

23. The Associated Factory Mutual Fire Insurance Companies: Properties of Flammable Liquids, Gases, and Solids. Ind. and Eng. Chem., vol. 32, no. 6, June 1940, pp. 880-884.

TABLE I

PURIFICATION AND PHYSICAL CONSTANTS OF COMPOUNDS

Compound	Source (1)	Purity designation	Additional purification (2)	Refractive index				Density				Freezing point			Boiling point	
				Temperature (°C)	Observed	Literature	Reference	Temperature (°C)	Observed (grams/ml)	Literature (grams/ml)	Reference	Observed (°C)	Literature (°C)	Reference	Pressure (mm of Hg)	Temperature (°C)
n-Paraffins:																
n-Heptane	D	Pure grade, 99%	N	25	1.3851	1.38511	16	25	0.6793	0.67951	16	—	—	—	740	97.0
n-Decane	A	Eastman	MN	25	1.4098	1.40986	15	25	.7263	.72643	15	—	—	—	20	72.8
n-Dodecane	B	>95%	N	25	1.4196	1.41945	17	25	.7449	.74512	17	—	—	—	10	92.8
n-Tetradecane	A	Eastman	MN	25	1.4268	1.42681	17	25	.7590	.75913	17	—	—	—	10	124.2
n-Hexadecane	B	>95%	N	25	1.4324	1.43248	17	25	.7695	.76993	17	—	—	—	9	148.0
n-Octadecane	A	Eastman	MN	28	1.4358	1.43582	17	28	.7771	.77646	17	28	28	(3)	29	202
n-Nonadecane	C	----------	SMN	--	—	—	—	—	—	—	--	32.0	32	18	10.9	189.4
n-Eicosane	C	----------	SMN	--	—	—	—	—	—	—	—	36.8	36-37	18	10.8	198-199
Branched paraffins:																
2,2,4-Trimethylpentane	D	Pure grade, 99%	N	20	1.3914	1.39157	19	—	—	—	—	—	—	—	—	—
2,5,5-Trimethylheptane	E	>99%	O	20	1.4148	1.4149	(4)	—	—	—	—	—	—	—	—	—
4,5-Dimethyloctane	E	>97%	O	20	1.4189	1.4190	(4)	—	—	—	—	—	—	—	—	—
4-Isopropylheptane	E	>97%	O	20	1.4170	1.4171	(4)	—	—	—	—	—	—	—	—	—
3-Ethyloctane	E	>98%	O	20	1.4148	1.4150	(4)	—	—	—	—	—	—	—	—	—
2-Methyldecane	E	>99%	O	20	1.4153	1.4154	(4)	—	—	—	—	—	—	—	—	—
α-Olefins:																
1-Decene	B	>95%	N	20	1.4212	1.4213	20	25	0.7374	0.7369	20	—	—	—	9.0	55.0
1-Dodecene	B	>95%	N	20	1.4300	1.4301	20	25	.7552	.7553	20	—	—	—	5.2	77.8
1-Tetradecene	B	>95%	N	20	1.4360	1.4365	(3)	25	.7647	—	--	—	—	—	5.0	106.2
1-Hexadecene	B	>95%	N	20	1.4411	1.4410	20	25	.7779	.7777	20	—	—	—	6.1	137
1-Octadecene	B	>95%	N	20	1.4450	1.4449	20	25	.7856	.7857	20	—	—	—	10.0	174.3
Ethers:																
Diethyl ether	G	c.p., abs.	QT	--	—	—	—	—	—	—	--	—	—	—	—	—
Diisopropyl ether	F	----------	QT	20	1.3671	—	—	—	—	—	--	—	—	—	—	—
Dihexyl ether	A	Eastman	NT	25	1.4186	—	—	—	—	—	--	—	—	—	14.5	107.5
Dioctyl ether	B	> 95%	NT	25	1.4318	—	—	—	—	—	—	—	—	—	6.2	149
Didecyl ether	B	> 95%	NT	25	1.4393	—	—	—	—	—	—	—	—	—	4.7	188

[1]Letter symbols refer to source of data. A, Eastman Kodak Co.; B, Humphrey-Wilkinson Co.; C, Atlantic Petroleum Corp.; D, Phillips Petroleum Co.; E, A.P.I. Project 45, courtesy of Mr. C. H. Board; F, Carbide and Carbon Chemicals Corp.; G, the Coleman Bell Co.; H, Naval Res. Lab., courtesy of Dr. W. A. Zisman.

[2]Letter symbols refer to additional purification processes. M, chlorosulfonic-acid treatment (reference 15); N, fractionation through 90-cm glass-helix-packed column taking center cut of fractionation for experimental use; O, percolation through silica gel; P, percolation through alumina; Q, refluxing with sodium and simple distillation; R, refluxing with magnesium ethoxide and simple distillation; S, fractionation of C_{20} straight-chain paraffin-hydrocarbon sample; T, test for peroxides before use and if necessary percolation through alumina.

[3]Data obtained from Humphrey-Wilkinson Data Sheet, 1949.

[4]Data obtained from a private communication from Mr. C. H. Board.

TABLE I

PURIFICATION AND PHYSICAL CONSTANTS OF COMPOUNDS - Concluded

Compound	Source (5)	Purity designation	Additional purification (6)	Refractive index				Density				Freezing point			Boiling point	
				Temperature (°C)	Observed	Literature	Reference	Temperature (°C)	Observed (grams/ml)	Literature (grams/ml)	Reference	Observed (°C)	Literature (°C)	Reference	Pressure (mm of Hg)	Temperature (°C)
Aromatic Hydrocarbons:																
Benzene	G	c.p.	Q	25	1.4972	1.49792	21	25	0.8727	0.87319	———	———	———	———	740	79.4
Toluene	G	———do———	N	25	1.4939	1.49413	21	—	———	———	———	———	———	———	740	109.6
o-Xylene	A	Eastman	N	20	1.5020	1.50345	21	—	———	———	———	———	———	———	740	143.8
m-Xylene	A	———do———	N	20	1.4971	1.49722	21	—	———	———	———	———	———	———	740	137.8
p-Xylene	A	———do———	N	20	1.4957	1.49582	21	—	———	———	———	———	———	———	740	138.5
1,2,3-Trimethylbenzene	A	Technical grade	N	25	1.5078	1.51150	21	—	———	———	———	———	———	———	740	162-163
1,2,4-Trimethylbenzene	A	———do———	N	25	1.4994	1.50237	21	—	———	———	———	———	———	———	740	168-169
1,3,5-Trimethylbenzene	A	———do———	N	25	1.4933	1.49684	21	—	———	———	———	———	———	———	740	164-166
1,2,4-Triethylbenzene	A	———do———	N	20	1.4970	1.4968	19	—	———	———	———	———	———	———	———	———
1,3,5-Triethylbenzene	A	———do———	N	20	1.4958	1.4951	19	—	———	———	———	———	———	———	———	———
α-Methylnaphthalene	A	Practical	NP	20	1.6088	1.6157	19	—	———	———	———	———	———	———	12	113
Alcohols:																
Ethanol	-	Abs.	R	18.4	1.3622	1.36242	———	—	———	———	———	———	———	———	———	———
Propanol	G	c.p.	N	20	1.3858	1.38543	———	—	———	———	———	———	———	———	———	———
Isopropanol	F	99%	—	20	1.3773	1.37757	18	—	———	———	———	———	———	———	———	———
1-Decanol	B	>90%	N	20	1.4370	1.4372	(7)	—	———	———	———	5.8	6-7	(7)	7.2	111
1-Dodecanol	B	>90%	N	24.5	1.4408	1.4408	(7)	—	———	———	———	23.9	24.0	(7)	5	129.8
1-Tetradecanol	B	>90%	N	———	———	———	———	—	———	———	———	37.5	38-39	(7)	6.8	156.2
1-Hexadecanol	B	>90%	N	———	———	———	———	—	———	———	———	48.9	49	17	≈1	148
1-Octadecanol	B	>90%	N	———	———	———	———	—	———	———	———	57.7	57.95	17	≈1	167
Esters[8]	H	High purity	P	———	———	———	———	—	———	———	———	———	———	———	———	———

[5]See footnote 1 on preceding page.

[6]See footnote 2 on preceding page.

[7]See footnote 3 on preceding page.

[8]Esters are listed in table III.

TABLE II

EFFECT OF CONDITION OF METAL SURFACE ON SPONTANEOUS

IGNITION TEMPERATURE OF HYDROCARBONS

Compound	Condition of stainless-steel surface	Spontaneous ignition temperature (°C) at air flow (cm^3/min) of -	
		125	25
α-Methylnaphthalene	Oxidized	579	---
	Bright metal	553	547
p-Xylene	Heavily oxidized[1]	697	---
		708	704
		710	708
	Bright metal	657	650
m-Xylene	Heavily oxidized	---	700
	Bright metal	652	645
Toluene	Slightly oxidized	644	640
	Bright metal	635	630
Cetane	High temperature; oxidized cup	234	232
	Low temperature; oxidized cup	232	225
	Bright metal	235	232

[1]Data given for three successive runs.

TABLE III

SPONTANEOUS IGNITION TEMPERATURES OF VARIOUS ORGANIC COMPOUNDS

Compound	Spontaneous ignition temperature (°C) obtained -		
	At air flow of 125 cm^3/min	At air flow of 25 cm^3/min	From literature
n-Paraffins:			
n-Heptane	250	244	[a]230 [b]259
n-Decane	236	231	[b]252
n-Dodecane	232	229	—
n-Tetradecane	232	227	—
n-Hexadecane	232	225	[c]241 [b]235
n-Octadecane	235	227	—
n-Nonadecane	237	230	—
n-Eicosane	240	232	—
Branched paraffins:			
2,2,4-Trimethylpentane	515	502	[b]529
2,5,5-Trimethylheptane	485	463	—
4,5-Dimethyloctane	388	290	—
4-Isopropylheptane	288	275	—
3-Ethyloctane	235	231	—
2-Methyldecane	231	225	—
α-Olefins:			
1-Decene	265	—	—
1-Dodecene	257	—	—
1-Tetradecene	255	—	—
1-Hexadecene	253	—	—
1-Octadecene	251	—	—
Aromatic hydrocarbons:			
Benzene	645	639	[c]702 [d]580 [b]652
Toluene	635	630	[b]629
o-Xylene	551	547	[b]591
m-Xylene	652	645	[b]689
p-Xylene	657	650	[b]690
1,2,3-Trimethylbenzene	510	—	—
1,2,4-Trimethylbenzene	528	—	—
1,3,5-Trimethylbenzene	577	—	—
Triethylbenzenes:			
Predominately 1,3,5 isomer	446	—	—
Predominately 1,2,4 isomer	439	—	—
α-Methylnaphthalene	553	547	[b]565
Alcohols:			
Ethanol	425	—	[a]392
Propanol	441	---	[a]439
Isopropanol	498	---	[d]456
1-Decanol	291	---	—
1-Dodecanol	283	—	—
1-Tetradecanol	279	—	—
1-Hexadecanol	273	—	—
1-Octadecanol	269	—	—
Ethers:			
Diethyl ether	193	190	[d]193
Diisopropyl ether	500	495	[e]443
Dihexyl ether	200	197	—
Dioctyl ether	210	210	—
Didecyl ether	217	217	—
Esters:			
Di(1-ethylpropyl) adipate	436	432	[f]443
Di(1-ethylpropyl) azelate	420	419	[f]443
Di(1-ethylpropyl) sebacate	412	410	[f]426
Di(2-ethylhexyl) adipate	385	384	[f]395

[a]Data obtained from reference 3.

[b]Data obtained from reference 2.

[c]Data obtained from reference 1.

[d]Data obtained from reference 22.

[e]Data obtained from reference 23.

[f]Data obtained from reference 11.

TABLE IV

EFFECT OF METALS ON IGNITION OF COMPOUNDS OF LOW SPONTANEOUS-IGNITION-TEMPERATURE VALUES

Metal	Spontaneous ignition temperature (°C) of -							
	Tetradecane (a)	Dodecane	Octadecane	Dodecene	Octadecene	Decanol	Dodecanol	Dioctyl ether
Stainless steel	232	232	235	257	251	291	283	207
Copper	233	230	240	261	255	288	278	206
Aluminum	230	235	235	256	251	289	280	—
Black iron	233	235	237	257	252	294	284	208
Brass	234	234	241	255	253	289	278	208
Inconel	230	235	236	256	251	292	281	207
Aluminum alloy[b]	231	232	237	256	251	289	280	208
Magnesium	233	—	—	[a]257	[a]252	—	—	—
Difference between high and low values	4	5	6	6	4	6	6	2

[a]These series were run with stainless-steel sleeve and lid in copper block, varying metal disk. All others were run in stainless-steel block with complete cup assembly (disk, sleeve, and lid) made of metal to be observed.

[b]24-S aluminum alloy (4 percent copper).

TABLE V

SPONTANEOUS IGNITION TEMPERATURE OF DODECANE CONTAINING

5 MOLE PERCENT OF VARIOUS ADDITIVES

Additive (a)	Spontaneous ignition temperature (°C) (b)	
	230 235 240 245 250 255 260 265 270	
None		232
Amines:		
Aniline		243
o-Toluidine		255
p-Toluidine		259
2-Amino-1,3-dimethylbenzene		265
2-Amino-1,4-dimethylbenzene		266
5-Amino-1,3-dimethylbenzene		265
4-Amino-1,3-dimethylbenzene		267
N-Methylaniline		268
Ethyl-o-toluidine		271
Diphenylamine		272
o-Chloroaniline		237
m-Chloroaniline		239
p-Chloroaniline		245
N.N-Dimethylaniline		232
Triethanolamine[c]		234
Diethanolamine[c]		233
Monoethanolamine[c]		234
Pyridine		233
o-Nitroaniline		235
m-Nitroaniline		234
p-Nitroaniline		231
Diethylamine		248
Benzylamine		238
Triethylamine		234
Phenols:		
Phenol[c]		239
Resorcinol[c]		235
Hydroquinone[c]		245
Guaiacol		244
Hydrocarbons:		
Benzene		232
Toluene		232
o-Xylene		233
m-Xylene		234
p-Xylene		234
Mesitylene		234
1,2,3-Trimethylbenzene		234
1,2,4-Trimethylbenzene		238
Triethylbenzene		236
Hexamethylbenzene		246
Hexaethylbenzene		239
Naphthalene		236
α-Methylnaphthalene		238
Biphenyl		231

[a]Majority of additives listed were obtained from readily available sources and were further purified by simple distillation or recrystallization.

[b]Temperatures were taken at air-flow rate of 125 cm^3/min.

[c]These additives were not completely miscible with dodecane.

TABLE V

SPONTANEOUS IGNITION TEMPERATURE OF DODECANE CONTAINING 5 MOLE PERCENT OF VARIOUS ADDITIVES – Concluded

Additive (a)	Spontaneous ignition temperature (°C) (b)	
	230 235 240 245 250 255 260 265 270	
None		232
Alcohols:		
Isopropanol		237
Benzyl alcohol		235
Decanol		240
Naphthenates[c]:		
Cobalt naphthenate		239
Calcium naphthenate		238
Iron naphthenate		239
Manganese naphthenate		238
Lead naphthenate		238
Carbonyl compounds:		
Acetophenone		232
Benzaldehyde		231
Cyclohexanone		233
Halogen compounds:		
Bromobenzene		232
Chlorobenzene		232
Carbon tetrachloride		230
1,1,2-Trichloroethane		232
Miscellaneous:		
Ethylbenzoate		232
Nitrobenzene		231
α-Methyl,o-trifluoromethylstyrene		237
Isopropyl ether		234
Isoamyl nitrite		237
Cumene hydroperoxide		230
Di-tert-butyl peroxide	199	199
Tetraethyl lead[d]	580	580
	434	[e]434
	525	[f]525
	436	[ef]436

[a]Majority of additives listed were obtained from readily available sources and were further purified by simple distillation or recrystallization.

[b]Temperatures taken at air-flow rate of 125 cm³/min.

[c]Five percent by weight of solution of naphthenate in dodecane.

[d]Spontaneous ignition temperature of mixture of tetraethyl lead (either 1 or 5 mole percent) and docecane at zero air-flow rate is 420° C.

[e]Temperatures taken at air-flow rate of 25 cm³/min.

[f]One mole percent of tetraethyl lead in dodecane.

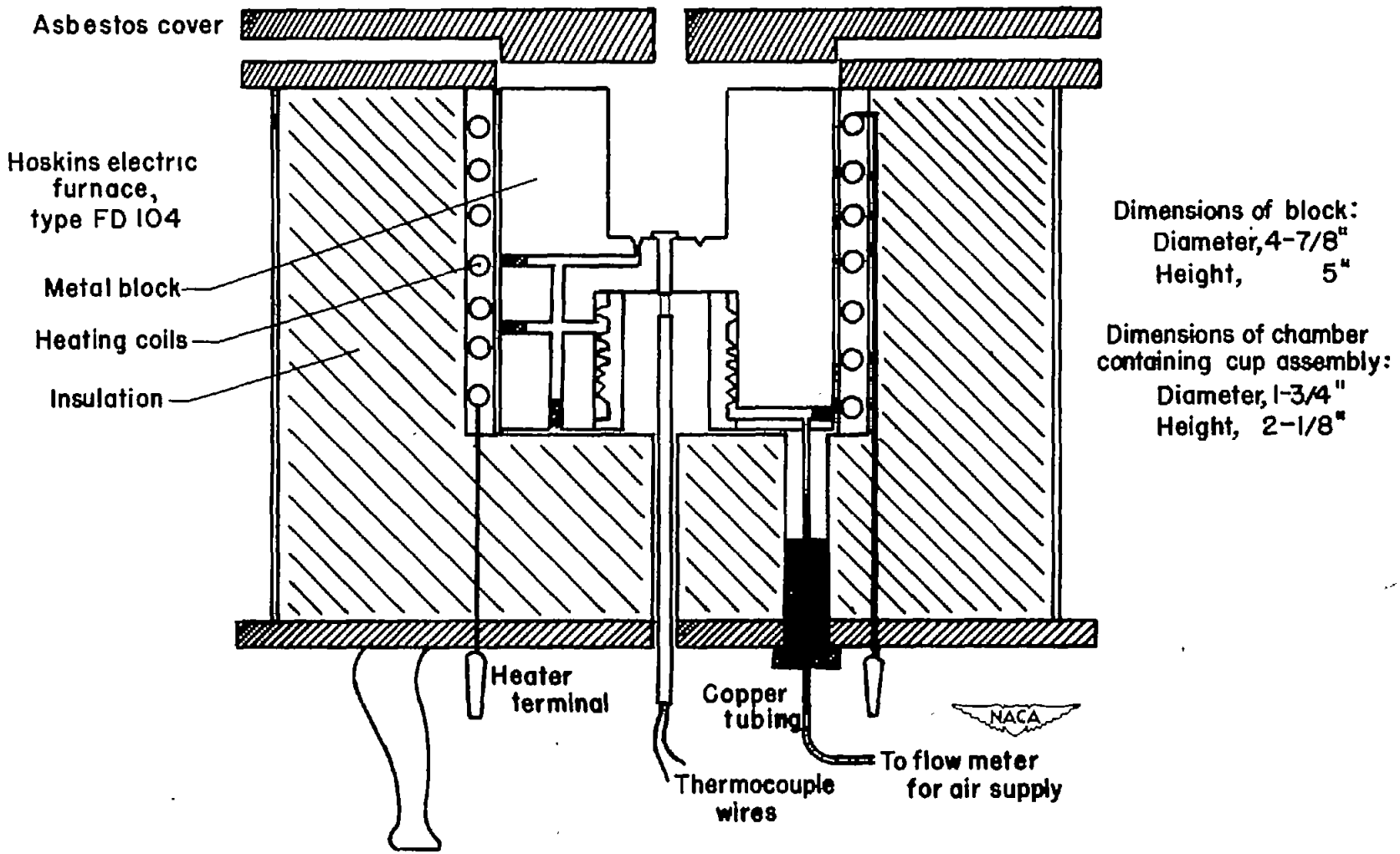

Figure 1.- Cross-sectional view of ignition apparatus showing arrangement of metal block in furnace but not including cup assembly.

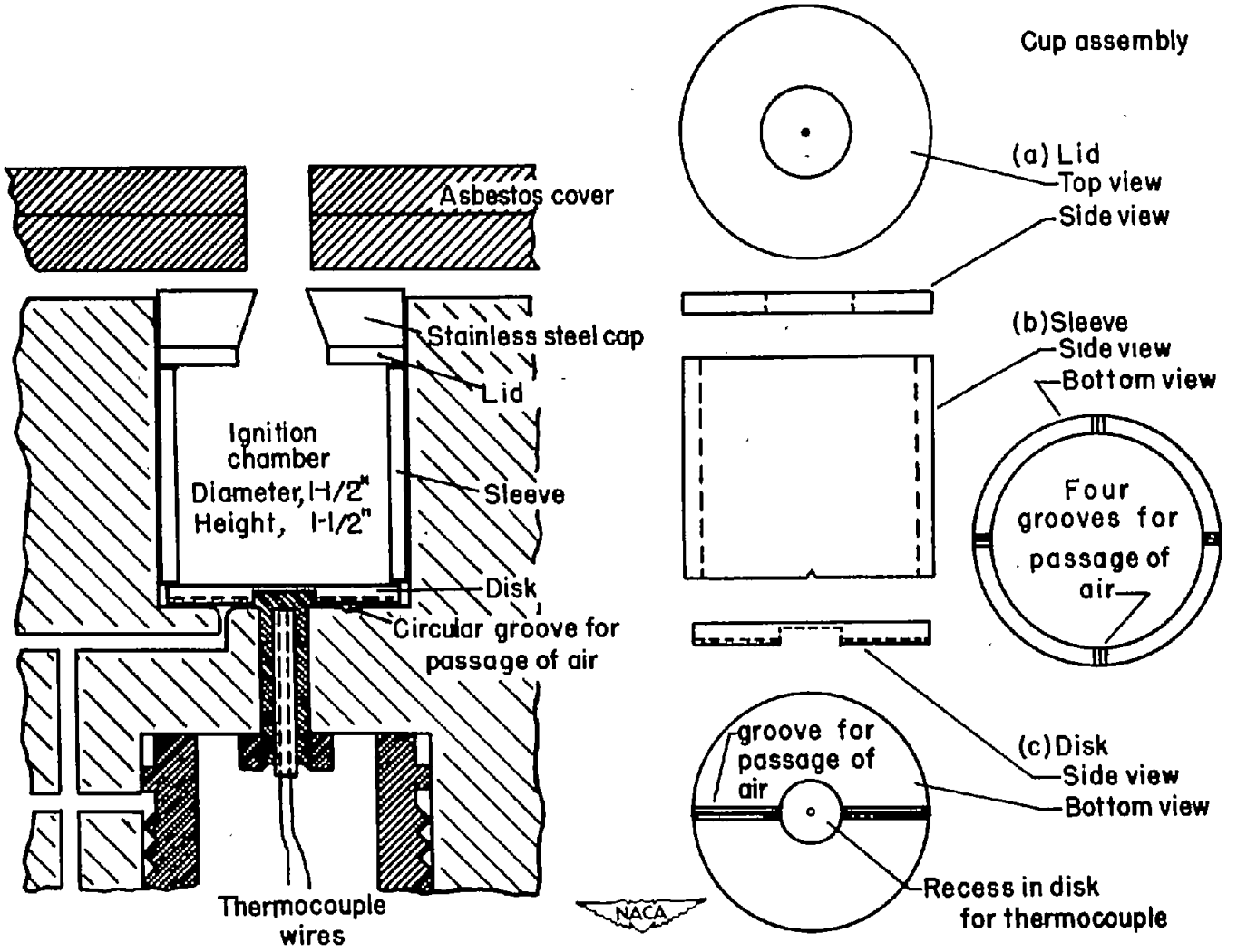

Figure 2.- Cross-sectional view of metal block showing ignition cup assembly.

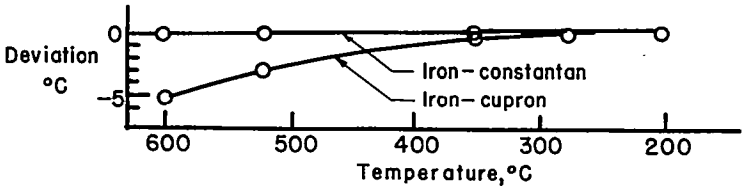

(a) Calibration of iron-cupron thermocouple (like those permanently located in the metal blocks) with iron-constantan thermocouple. A Leeds & Northrup potentiometer calibrated for iron-constantan thermocouples was used.

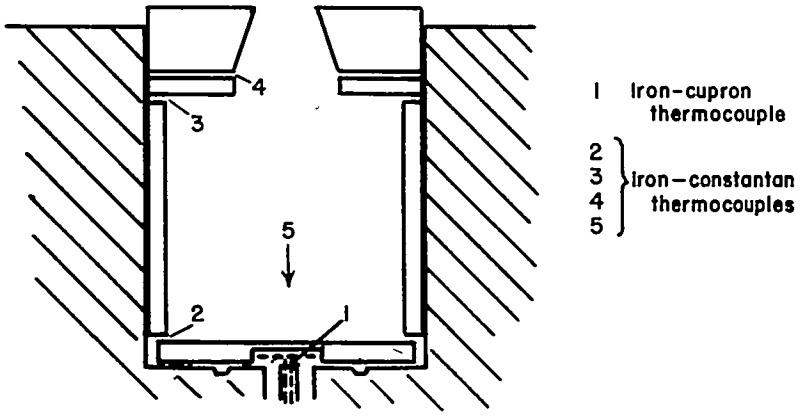

(b) Sectional view of cup assembly showing position of five thermocouples.

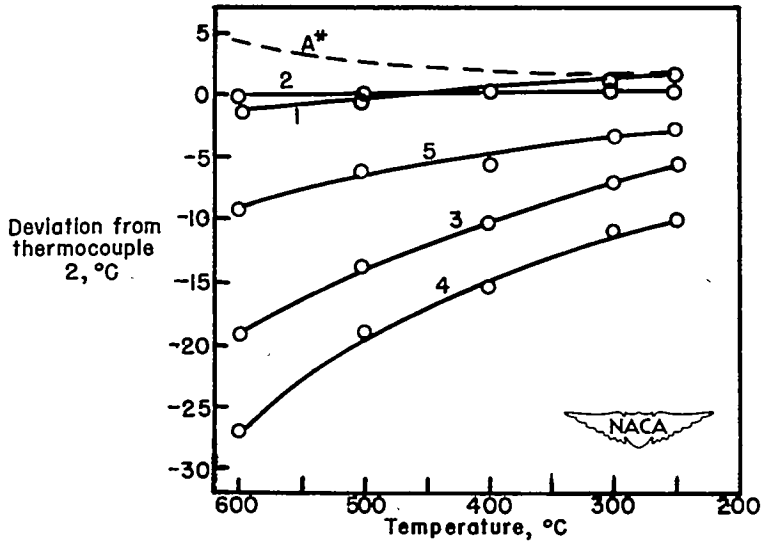

(c) Distribution of heat in ignition cup as it cools from 600° to 200° C. Symbol A* refers to iron-constantan equivalent reading of thermocouple 1 obtained by using data in part (a). In reporting the spontaneous ignition temperature the direct reading of thermocouple 1 was used.

Figure 3.- Temperature distribution in metal cup assembly.

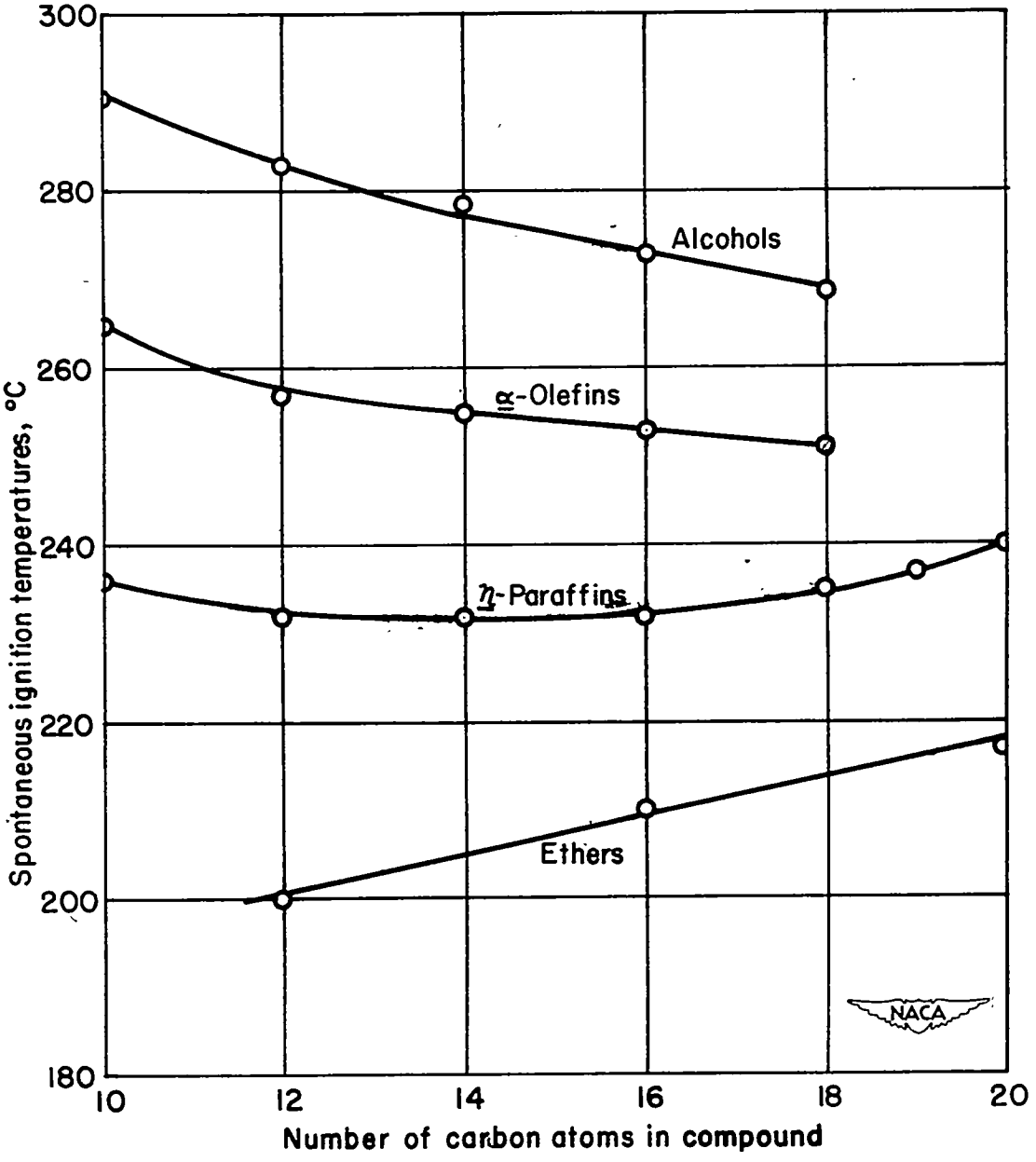

Figure 4.- Relationship of spontaneous ignition temperature to length of carbon chain for some alcohols, α-olefins, n-paraffins, and ethers at air-flow rate of 125 cubic centimeters per minute.

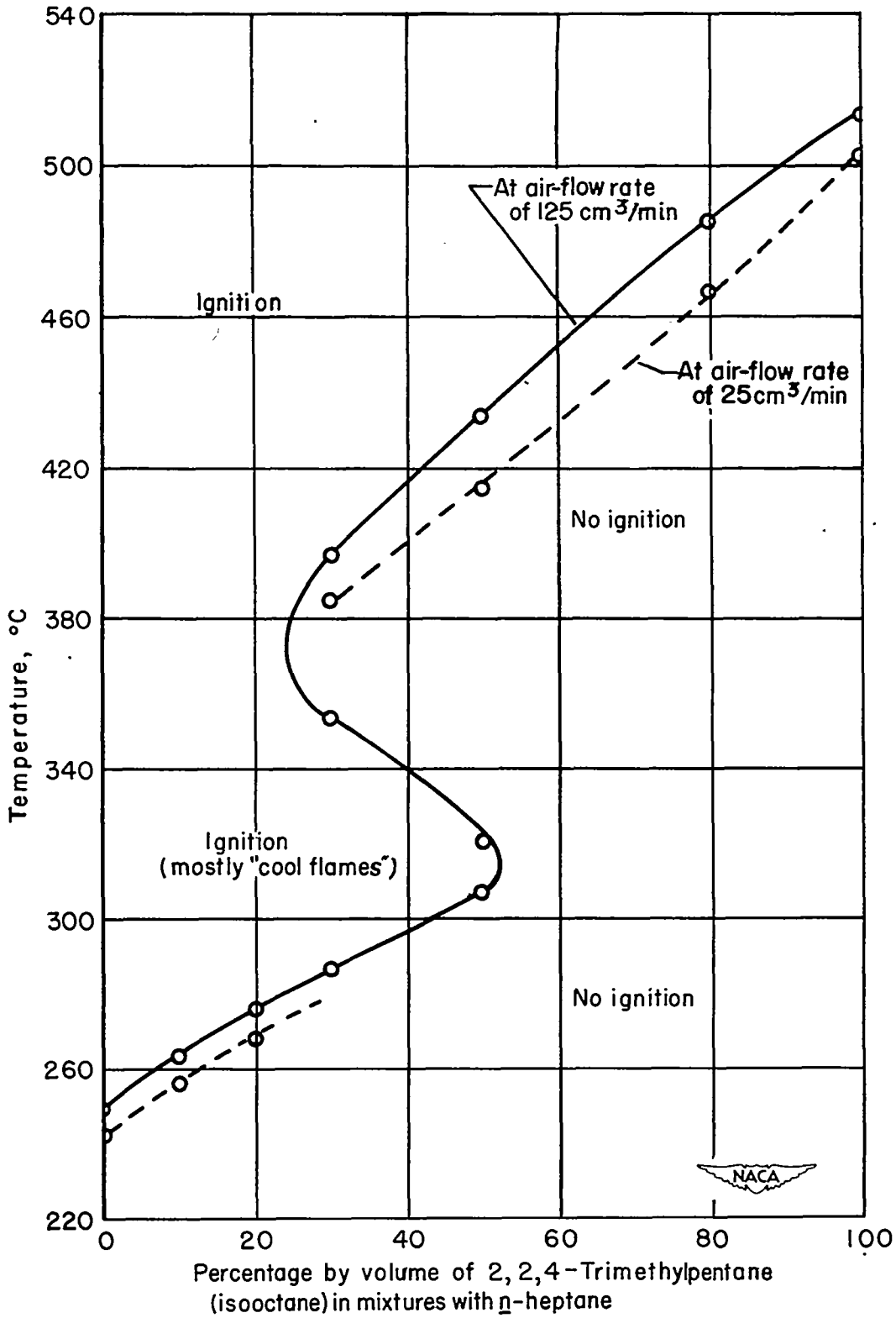

Figure 5.- Spontaneous ignition characteristics of various 2,2,4-trimethylpentane and n-heptane mixtures.

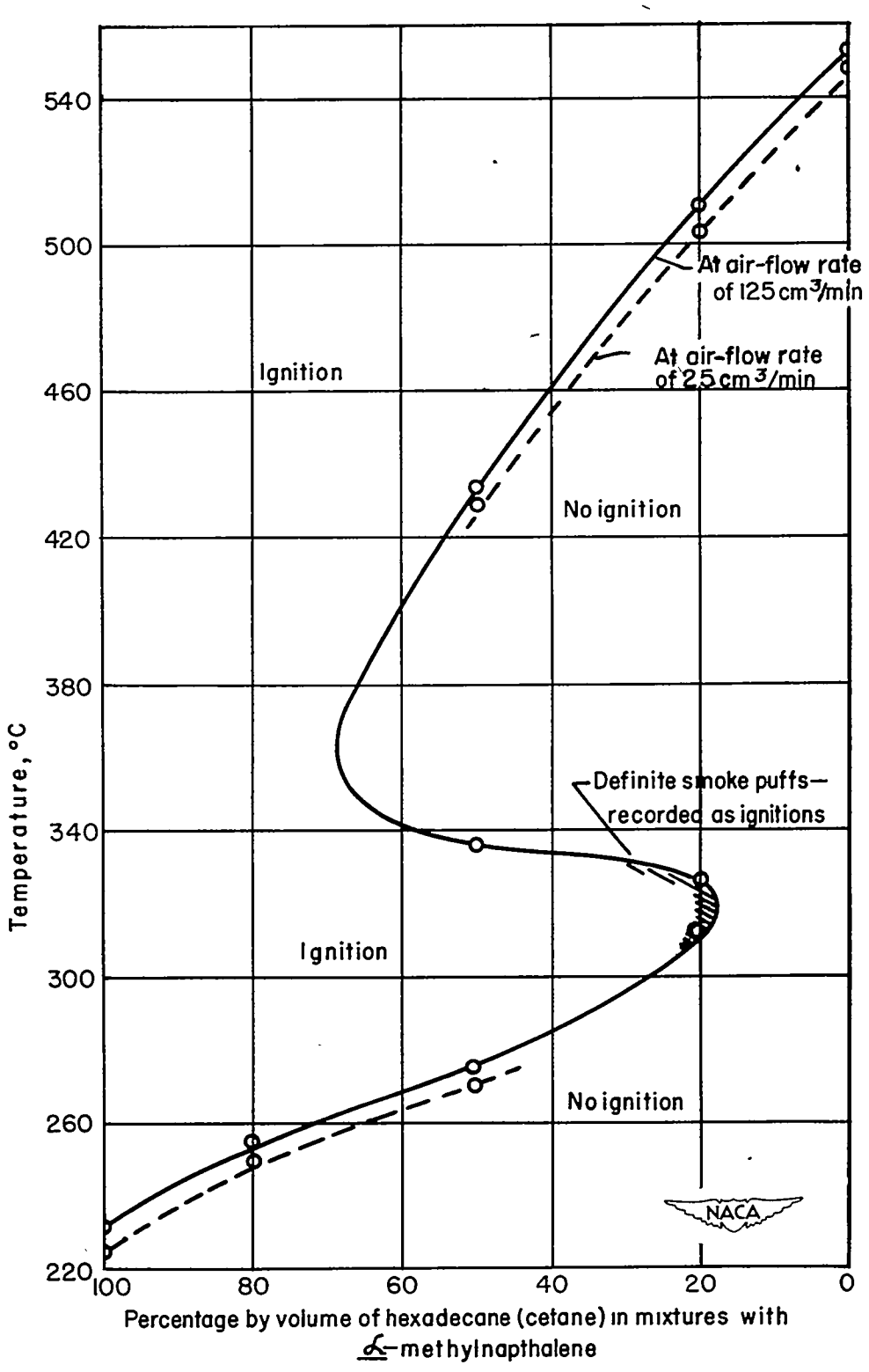

Figure 6.- Spontaneous ignition characteristics of various hexadecane and α-methylnaphthalene mixtures.

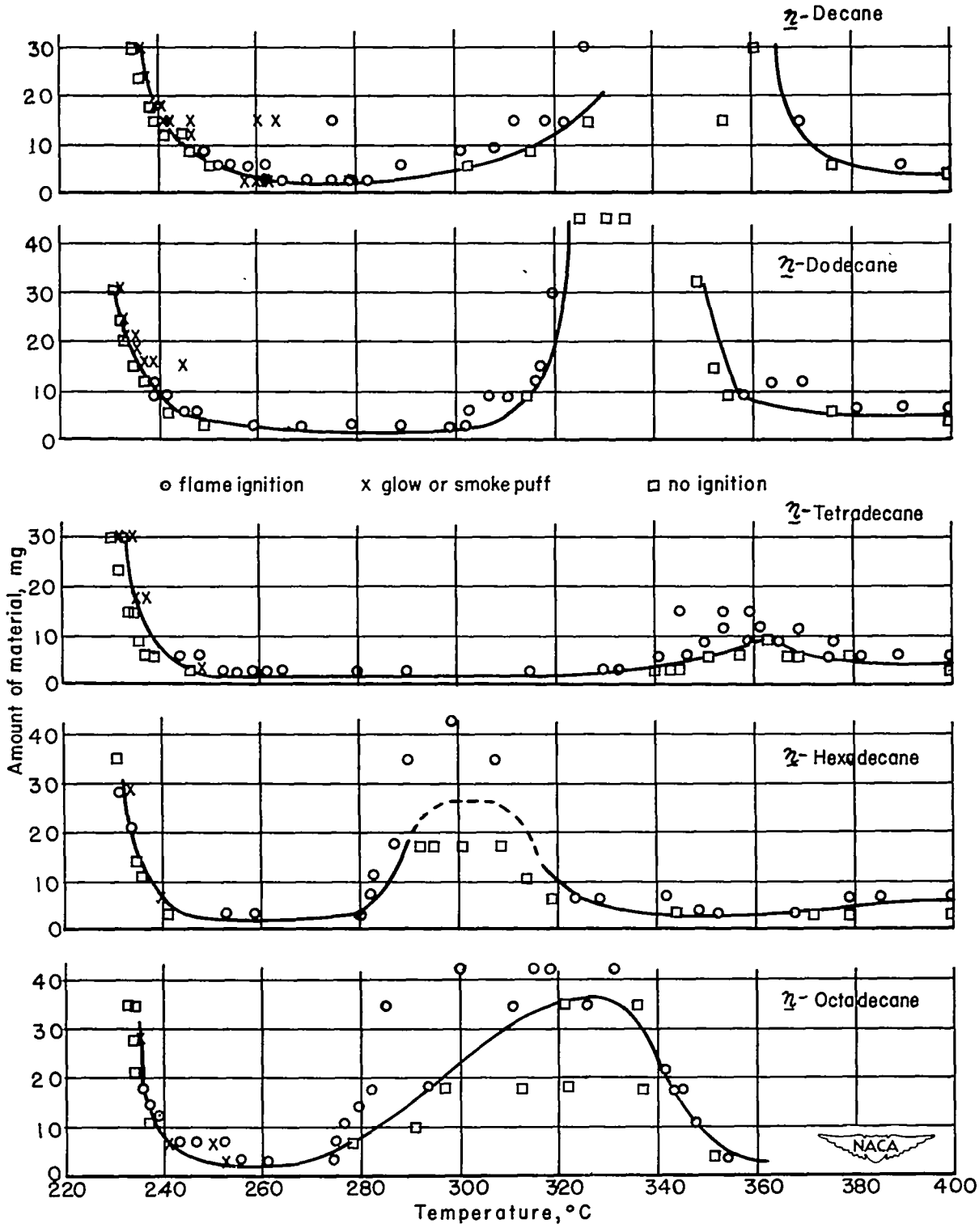

Figure 7.- Nonignition zones of n-paraffins.

NACA-Langley - 4-21-52 - 250