950

NACA TN 2567

TECH LIBRARY KAFB, NM
0065574

NATIONAL ADVISORY COMMITTEE FOR AERONAUTICS

TECHNICAL NOTE 2567

DIRECT MEASUREMENTS OF SKIN FRICTION

By Satish Dhawan

California Institute of Technology

Washington
January 1952

AFMDC
TECHNICAL LIBRARY
AFL 2811

TECH LIBRARY KAFB, NM
0065574

1D

NATIONAL ADVISORY COMMITTEE FOR AERONAUTICS

TECHNICAL NOTE 2567

DIRECT MEASUREMENTS OF SKIN FRICTION

By Satish Dhawan

SUMMARY

A device has been developed to measure local skin friction on a flat plate by measuring the force exerted upon a very small movable part of the surface of a flat plate. These forces, which range from about 1 milligram to about 100 milligrams, are measured by means of a reluctance measuring device. The apparatus was first applied to measurements in the low-speed range, both for laminar and turbulent boundary layers. The measured skin-friction coefficients show excellent agreement with Blasius' and Von Kármán's results. The device was then applied to high-speed subsonic flow and the turbulent-skin-friction coefficients were determined up to a Mach number of about 0.8. A few measurements in supersonic flow were also made.

The paper describes the design and construction of the device and the results of the measurements.

INTRODUCTION

An object moving through a fluid experiences a drag force which can be decomposed into pressure drag and skin friction. This division is the same whether the body moves with supersonic or subsonic speeds. At present, wave drag and induced drag are by far better understood both experimentally and theoretically than skin friction and boundary-layer separation. This is particularly true for supersonic velocities, but it is also curiously enough true that experimental investigations of skin friction in the subsonic range and in incompressible flow are exceedingly rare.

Recent advances in the design of high-speed aircraft and missiles have shown that a more exact knowledge of skin friction (and heat transfer, which is related) is of great importance. Theory of the laminar boundary layer and of laminar skin friction both in low-speed and high-speed flow has been worked out to a considerable extent in the course of the last decade. In spite of the lack of detailed experiments on laminar skin friction, it is generally felt that the theoretical results are adequate and trustworthy up to Mach numbers of the order of 4.

Beyond this range, for hypersonic velocities, new effects such as dissociation, variable Prandtl number, and so forth appear and the present theory does not seem to be adequately explored.

Turbulent skin friction, on the other hand, presents a much more serious problem. The understanding of turbulent shear flow, even in incompressible flow, is inadequate and it is at present not possible to formulate a complete theory without recourse to empirical constants. Even if it is assumed that low-speed turbulent skin friction is known, say from Von Kármán's logarithmic laws with empirically determined constants, the question of how to continue these laws to high velocities and to supersonic flow arises. This question was first discussed by Von Kármán in his Volta Congress paper in 1935 (reference 1) and has since then attracted a large number of investigations, for example, by Frankl and Voishel (reference 2), Ferrari (reference 3), Van Driest (reference 4), Li and Nagamatsu (reference 5), and so forth. The net result of all these investigations is a set of curves of skin friction against Mach number (at constant Reynolds number) which are bounded by Von Kármán's results for incompressible and compressible flows. That is, the general trend is a decrease of skin friction with Mach number as in laminar flow. However, this decrease may be larger or smaller depending upon the assumptions made in the analysis. None of the assumptions made have a theoretically convincing reason, because of the present lack of knowledge of turbulent flow. It turns out that Von Kármán's original assumption, which is also the simplest, gives so far the largest decrease in skin friction with Mach number; for example, the ratio of compressible to incompressible skin-friction coefficient at a Mach number of 2 and a Reynolds number of 1,000,000 is approximately 0.66 according to Von Kármán.

Hence, it is evident that the differences between various theories are anything but minor. In fact, the differences at Mach numbers of the order of 2 are so large that performance computations based upon the one or the other of the theoretical skin-friction coefficients result in very large, and sometimes decisive, differences. It is clear, therefore, that, besides the fundamental interest in turbulent boundary layers, the determination of high-speed skin friction is of paramount technical importance today.

The present investigation was undertaken with the aim of developing an instrument capable of measuring skin friction in high-speed flow. The program consisted of four parts:

(a) A survey of possible methods of determining skin friction with the aim of selecting the most promising one for further development. The result of this study suggested direct measurement of local skin friction. This is carried out by measuring the shear force exerted upon a small movable part of a solid boundary by means of a reluctance pickup.

(b) The design and construction of the device, including detailed studies of necessary tolerances and sensitivities.

(c) The application of the device to skin-friction measurements in incompressible flow where the results can be compared both with measurements by other means and with theory.

(d) The measurement of skin-friction coefficients in high-speed and supersonic flow.

The second part of (d) was, unfortunately, not completely accomplished. Only a few measurements in supersonic flow with doubtful flow conditions were carried out. This is due to purely external reasons and not due to a failure of the device. The main aim of the investigation was the development of the apparatus, a determination of its accuracy, and a demonstration of its applicability.

This work was conducted at GALCIT under the sponsorship and with the financial assistance of the National Advisory Committee for Aeronautics as part of a long-range investigation of boundary-layer phenomena at high speeds.

SYMBOLS

c_f local skin-friction coefficient

c_{f_i} local skin-friction coefficient in incompressible flow

c_{f_o} Blasius value for local skin-friction coefficient

$\Delta c_f = c_f - c_{f_o}$

c_p specific heat at constant pressure

c_v specific heat at constant volume

h enthalpy

H ratio of displacement to momentum thickness (δ^*/θ)

H_c ratio of displacement to momentum thickness in compressible flow

H_i	ratio of displacement to momentum thickness in incompressible flow
M	local Mach number
M_1	free-stream Mach number
p	local static pressure
p_o	total head (impact pressure)
p_o'	local total head
P_r	Prandtl number $\left(\frac{\mu c_p}{k}\right)$
q	dynamic pressure of free stream $\left(\frac{1}{2}\rho_\infty U^2\right)$
q_o	heat flow per unit time per unit area through surface
R	gas constant
R	Reynolds number $\left(\frac{Ux}{\nu}\right)$
T	static temperature of fluid
T_1	static temperature at outside edge of boundary layer
T_o	stagnation temperature
T_w	wall temperature
u	velocity component in boundary layer parallel to surface
u_ϵ	effective velocity obtained from Stanton tube reading
U	velocity at outside edge of boundary layer
$(\ )_w$	value at wall
v	output of transformer in volts
x	coordinate along surface in direction of flow

y	coordinate normal to surface
γ	ratio of specific heats $\left(c_p/c_v\right)$
δ	boundary-layer thickness
δ^*	displacement thickness
ϵ	height above wall
η	dimensionless coordinate normal to surface $\left(y/\sqrt{R}\right)$
θ	momentum defect thickness
θ_i	momentum defect thickness in incompressible flow
k	heat conductivity of fluid
μ	coefficient of viscosity
ν	kinematic coefficient of viscosity (μ/ρ)
ξ	coordinate along surface in vicinity of gap
ρ	fluid density
ρ_1	fluid density at outside edge of boundary layer
ρ_∞	fluid density of uniform flow
τ_o	shearing stress at surface (skin friction)

EXPERIMENTAL METHODS OF SKIN-FRICTION MEASUREMENT

Under the assumption of continuum flow and no slip at the solid surface the intensity of skin friction τ_o at any point on a solid surface in a flowing gas is given by

$$\tau_o = \left(\mu \frac{\partial u}{\partial y}\right)_{y=0}$$

where

μ coefficient of viscosity

u velocity component in boundary layer parallel to surface

y coordinate normal to surface

For the flow of gases at temperatures and pressures at which the mean free paths of the gas molecules are small compared with the physical dimensions of the system, the slip at the solid boundary is negligible. The following discussions will apply to cases where these conditions are realized.

The above expression for skin friction is valid for laminar and, because of the existence of the sublayer, also for turbulent boundary layers. In general, experimental attempts at measurement of the skin friction may be classified into two main types:

(a) Those which endeavor to determine the components of the right-hand side of the above equation

(b) Those which rely on a bulk measurement of the skin friction itself, or some other physical quantity related to it

Skin Friction by Velocity-Profile Method

In the first type of measurement the physical quantities to be measured are the viscosity μ and the velocity in the boundary layer u. Kinetic theory and experiment indicate the viscosity coefficient to be a function of the absolute temperature alone. Thus a local measurement of the wall temperature (with, say, a sensitive thermocouple) is sufficient to define $(\mu)_{y=0}$. The measurement of the velocity as a function of the normal coordinate y is, however, a more complicated procedure. Measurement of the local velocity in moving fluids is extremely difficult and up to the present time no really satisfactory direct methods exist for application to the observation of high-speed flows. The only known published measurements of local velocity of interest to fluid mechanics are those of Fage and Townend (reference 6) who used an ultramicroscope with a rotating objective to observe boundary-layer flow in a water channel. For most aerodynamic investigations the local velocity is not found directly but related quantities like dynamic pressure, mass flow, density, and so forth are measured. To obtain velocity from such measurements one requires additional information about the flow.

For example, consider the three most extensively used instruments, the pitot tube, the hot-wire anemometer, and the interferometer. In order to obtain velocity from the reading of a pitot tube one must know the local static pressure and density. For the hot-wire anemometer the local density is required, while information about the local temperature is necessary for the interferometer. In the case of the boundary layer, theoretical considerations, borne out by experiments, show that the variation of pressure normal to the surface is negligible. On this assumption the experimental determination of static pressure in the boundary layer is simplified to a local measurement on the surface. (Since the pressure is measured at the wall and its variation is small the assumption of constant p through the boundary layer introduces only second-order errors in a skin-friction measurement.) However, for the instruments mentioned above, for each determination of velocity one would still have to make at least one additional measurement apart from the reading of the instrument itself.

In determining skin friction from the slope at the wall of a measured velocity profile, errors in measurement of the profile directly affect τ_o. A method which is not so sensitive to the portion of the velocity profile in the immediate neighborhood of the wall is provided in principle by Von Kármán's momentum integral. The basic consideration underlying this is the fact that the frictional force on the surface must appear as a momentum defect in the rest of the boundary layer. For the case of steady two-dimensional flow past a flat surface one obtains

$$\frac{\tau_o}{\rho_1 U^2} = \frac{d\theta}{dx} + \theta\left[\left(\frac{\delta}{\theta} + 2\right)\frac{1}{U}\frac{dU}{dx} + \frac{1}{\rho_1}\frac{d\rho_1}{dx}\right]$$

where ρ_1 and U are the density and velocity just outside the boundary layer and θ and δ are defined by:

θ momentum defect thickness $\left(\int_0^\infty \frac{\rho u}{\rho_1 U}\left(1 - \frac{u}{U}\right) dy\right)$

δ displacement thickness $\left(\int_0^\infty \left(1 - \frac{\rho u}{\rho_1 U}\right) dy\right)$

and x is the coordinate in the direction of the flow. Several profiles in the region of determination of τ_o would now have to be measured so that the derivative of θ with respect to x can be found. This method, while not sensitive to errors in u close to the wall, involves the added

complication of knowing U, ρ_1, and θ as functions of x. Its application is more practical in the case of uniform flow past a flat plate when the pressure gradient in the x-direction is also zero and the above expression is reduced to

$$\frac{\tau_o}{\rho_\infty U^2} = \frac{d\theta}{dx}$$

The use of this method does not, however, eliminate the difficulties in the determination of velocity from a pressure or momentum measurement.

Notes on Instruments Used in Measurement of Velocity Profiles

Pitot (or total-head) tube.- The specialized form usually used for boundary-layer measurements consists of a small bore tube (of the order of 0.05-in. diam.) with its mouth flattened out to form a narrow rectangular opening. The impact pressure at the mouth is proportional to ρu^2 and is usually measured on a mercury or alcohol manometer. As mentioned before, in order to obtain velocity from the reading of such an instrument one needs a knowledge of either ρ or T. For nondissipative flows with speeds below the speed of sound, the assumption of isentropic deceleration at the tube mouth is closely fulfilled and the velocity u is related to the impact pressure p by

$$u = \sqrt{2c_pT_o\left[1 - \left(\frac{p}{p_o}\right)^{\frac{\gamma-1}{\gamma}}\right]}$$

where

T_o stagnation temperature

p local static pressure

$\gamma = \frac{c_p}{c_v}$, c_p and c_v being the specific heats at constant pressure and constant volume, respectively

The stagnation temperature T_o may be measured at some convenient reference point in the flow, for example, in the case of a wind tunnel, in the reservoir or settling chamber. At supersonic speeds a shock wave

appears in front of the tube mouth and the entropy loss through this must be taken into account. By assuming the shape of the shock wave to be straight and normal to the flow direction the velocity can still be calculated by use of the well-known Rayleigh pitot-tube formula

$$\frac{p}{p_o'} = \frac{\left(\frac{2\gamma}{\gamma + 1} M^2 - \frac{\gamma - 1}{\gamma + 1}\right)^{\frac{1}{\gamma-1}}}{\left(\frac{\gamma + 1}{2} M^2\right)^{\frac{\gamma}{\gamma-1}}}$$

where M is the local Mach number just ahead of the tube (in front of the shock wave) and p_o', the impact-pressure reading of the tube (behind the normal shock wave). The two pitot-tube formulas become identical at $M = 1$.

For a skin-friction determination with a pitot tube one would then have to know the following:

(a) The impact pressure indicated by the tube as a function of y within the boundary layer

(b) The static pressure at the point of measurement

(c) The temperature distribution in the boundary layer

By assuming the total temperature to be constant through the boundary layer the temperature measurement is very much simplified, but such an assumption causes some error in the value of the shearing stress. This assumption amounts to taking the value of the Prandtl number $P_r \equiv \frac{\mu c_p}{k} = 1$. Since for actual gases $P_r < 1$ (for air 0.724) the error is not large at low speeds but increases rapidly with increasing Mach number. An approximate estimate of the error in τ_o caused by such an assumption may be readily obtained. For points in the boundary layer very close to the wall the flow may be considered incompressible so that the pitot tube reads $h = p + \frac{1}{2}\rho u^2$. The pressure p is measured on the surface and is approximately constant through the boundary layer. From this

$$\frac{du}{dy} = \frac{1}{p}\sqrt{\frac{RT}{2\left(\frac{h}{p} - 1\right)}}\frac{dh}{dy} + \sqrt{\frac{R}{2T}\left(\frac{h}{p} - 1\right)}\frac{dT}{dy}$$

For $y \longrightarrow 0$, $\left(\frac{h}{p} - 1\right) \longrightarrow 0$ and the second term on the right-hand side is negligible as compared with the first. Therefore, for small values of y

$$\frac{du}{dy} \approx \sqrt{T}$$

Also, the viscosity coefficient is approximately

$$\mu \approx \sqrt{T}$$

so that the shear stress at the wall

$$\tau_o = \left(\mu \frac{du}{dy}\right)_w \approx T_w$$

Now

$$T_w = T_o - F(P_r) \frac{U^2}{2c_p}$$

where $F(P_r)$ is nearly $P_r^{1/2}$ for laminar and $P_r^{1/3}$ for turbulent boundary layers. Hence, by using $T_w = T_o$ the shearing stress would be directly in error. For the typical case of an insulated flat plate at $M \approx 1.5$ this error would amount to approximately 5 percent. At higher Mach numbers the errors would be even greater.

It is interesting to note the improvement in accuracy if an actual measured value of the wall temperature T_w is used for the determination of τ_o. The errors in $\left.\frac{du}{dy}\right]_w$ due to temperature are practically eliminated. The main limitation now is in the determination of $\left.\frac{dh}{dy}\right]_w$. Because of the finite size of the pitot tube, h cannot be measured right up to the wall. Another error introduced by the finite size of the pitot tube in boundary-layer measurements is due to the transversal total-pressure gradient in the boundary layer. The average indicated by the tube does not correspond to the velocity at the center of the tube but to that at some point which is shifted from the center towards the region of higher velocity. In a measurement of the velocity profile in a given boundary layer, this error is emphasized for points close to the wall. For a tube with a rectangular opening of 0.005 inch this shift

is of the order of 0 001 inch in a velocity gradient $\frac{du}{dy} \approx 10^6$ feet per second per foot (representative of a typical laminar boundary layer at Mach number of approximately 1.4 and Reynolds number, based on a 10-cm length, of 10^6). In actual use the shift can be approximately accounted for (see reference 7 for details).

Stanton tube.- The Stanton tube is a modification of the pitot tube which gives an indication of the shearing stress on a surface. It consists of a small tube with a hole in its side (see sketch). The tube

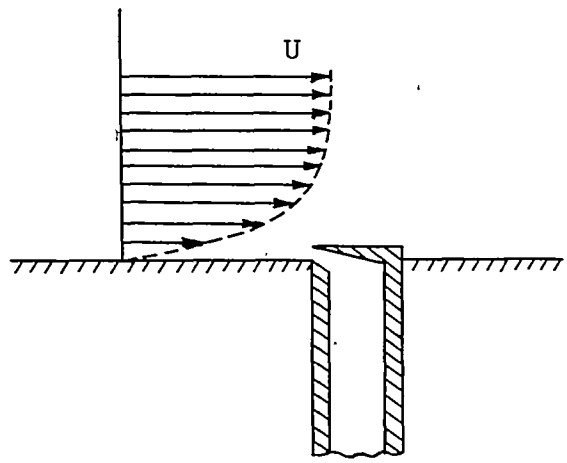

projects a small distance (of the order of 0.005 in.) from the surface on which the friction is to be measured and the opening in the side of the tube faces the direction of flow. The end of the tube is ground flat to form a razor-sharp lip with the opening. For a distance ϵ very close to the surface (this would have to be within the laminar sublayer in flows with turbulent boundary layers) one has approximately

$$\tau_o \approx \mu_w \frac{u_\epsilon}{\epsilon} = \left(\rho_w u_\epsilon^2\right)\left(\frac{\nu_w}{\epsilon u_\epsilon}\right)$$

where u_ϵ is the effective velocity corresponding to the tube pressure reading and the subscript w denotes conditions at the wall. The surface tube may thus be usefully employed for indications of changes in τ_o (see reference 8 for example of use). However, because of the unprecise definition of the quantity u_ϵ as measured by the tube and the extreme sensitivity to ϵ, the height of the tube above the surface, this method is not recommended for absolute measurement of τ_o.

Hot-wire anemometer.- The hot-wire anemometer depends for its measurement of velocity on the heat loss from a very small diameter (of the order of 0.0005 in.) wire which is heated electrically. For a given temperature difference between the heated wire and the surrounding air the amount of heat transferred is proportional to the square root of the mass flow ρu. In order to find the velocity u from the mass flow one must know the density ρ. For the measurement of mean velocity in boundary layers at low speeds, where the effects of compressibility can be neglected, the hot-wire anemometer is used as a calibrated instrument. The calibration is performed under controlled conditions, for example, in a wind tunnel with a low turbulence level. In this range the sensitivity and accuracy of this instrument are well-established. At high speeds the law of heat transfer deviates considerably from the one at low speeds. In particular, the effects of temperature and density gradients on the reading of the instrument under these conditions are not yet established (see reference 9 for some recent work on this subject). Since a hot-wire has to be calibrated under conditions which cannot be exactly reproduced during boundary-layer measurements, such effects may cause large changes in the calibration constants. Until the behavior of hot-wires in high-speed, particularly supersonic, flow is well-established, it is felt that this instrument is unsuitable for precise measurements of boundary-layer flow at high speeds.

Interferometer.- This instrument measures directly the change in density with reference to some known value (see reference 10 for an account of the theory of operation of this instrument). Since the interferometer leaves the flow undisturbed, it seems, at first sight, to be the ideal instrument for two-dimensional boundary-layer measurements. There are, however, serious limitations to its use for such work. These are due to:

(a) Errors arising from the refraction of the light traversing the boundary layer

(b) Presence of side-wall boundary layers in wind tunnels

(c) Transverse contamination of laminar boundary layers

The errors due to refraction are quite complex. As a ray of light traverses the boundary layer, it traces a curved path instead of a straight one because of the existence of density gradients in the boundary layer. Thus two types of errors are introduced as a result of refraction. The first is in the optical path length of the ray and the second, in the position to which the indicated density corresponds. Further errors result from the fact that because of refraction a ray of light which enters the tunnel at right angles to the side wall leaves the test section at an angle to the exit window or wall. This causes

refraction through the window, so that the location of the apparent origin of the ray is further in error. A more complete discussion of these errors may be found in references 11 and 12. It is sufficient to note here that investigations of the magnitudes of the refraction error show that the indicated density profiles in boundary-layer measurements with an interferometer may be in error to the extent of approximately 10 percent.

The second limitation, that of the presence of tunnel-wall boundary layers, affects the measured density since the interferometer beam traverses both the wall density field as well as the one being studied. One method of minimizing this error is to pass the reference beam of the interferometer also through the test section and thus cancel the effect of the wall boundary layers (reference 13).

The third limitation is of primary consequence in laminar-boundary-layer measurements. It is well-known (reference 14) that external disturbances can cause transition of laminar flow to the turbulent type. Observations of laminar boundary layers on flat plates show that because of transverse contamination of the sides there are always regions of turbulent flow. Again the interferometer beam integrates the density in these regions as part of the laminar boundary layer and hence gives erroneous indications.

The above discussion shows that accurate measurement of density in a boundary layer with an interferometer is far from simple. Approximate methods of correction have been devised by various workers (references 11, 12, and 15). It is felt that the techniques so far developed are inadequate, particularly for taking the rather serious refraction error into account. In addition to these difficulties in the measurement of density one still has the basic problem, mentioned before, of obtaining velocity from the reading of the instrument. Knowing ρ, one still needs the distribution of the static temperature through the boundary layer for a calculation of u. One may proceed to use theoretically calculated temperature distributions in the boundary layer (for example, in reference 16) or alternatively use a pitot tube to supplement the interferometer. In this connection the use of a total-head tube is considered to be an improvement over the first method of assuming theoretical distributions of temperature in the boundary layer and using the interferometer as a primary measuring instrument. The reading of a pitot tube (apart from errors due to finite size) is proportional to ρu^2 and, for all practical purposes, is independent of theoretical assumptions. Hence this, with an accurate independent measurement of ρ, should give a fairly reliable determination of the velocity.

Measurement of Skin Friction by Direct Methods

The preceding discussions show that experimental determination of skin friction by the indirect method of velocity-distribution measurement in thin boundary layers is subject to many errors. The shearing stress τ_o has to be determined by differentiation, either of measured velocity profiles or of slowly varying parameters (the loss of momentum in the boundary layer). Even when the quantities to be differentiated are themselves measured comparatively accurately the results of differentiation can be quite inaccurate.

The second type of skin-friction measurement, relying on a direct or bulk measurement, may be performed in principle in two ways:

(a) By a heat-transfer measurement

(b) By a direct-force determination

Skin friction by heat-transfer measurement.- The first method depends on Reynolds' analogy between the transport of momentum and the transfer of heat. If q_o is the heat flow per unit time from a unit area of the surface and k is the heat conductivity of the fluid, then

$$q_o = k\left(\frac{\partial T}{\partial y}\right)_{y=0}$$

where T is the local temperature. The analogy with the expression for the intensity of skin friction is at once apparent. For the case of two-dimensional flow with the Prandtl number $c_p\mu/k = 1$ the temperature T is a parabolic function of the velocity u alone. In such a case the heat flow q_o and the wall shearing stress τ_o may be explicitly related by an expression (reference 17) of the form:

$$\frac{q_o}{\tau_o} = \frac{T_1}{U}\left(\frac{k}{\mu}\right)_{y=0}\left[\frac{\gamma - 1}{2} M_1^2 - \left(\frac{T_w}{T_1} - 1\right)\right]$$

where

T_1 temperature of free stream

T_w wall temperature

U velocity of free stream

M_1 Mach number of free stream

In the above relation assumptions of laminar flow and equal orders of magnitude for the viscous and thermal boundary layers are inherent. It is easily seen that estimates of skin friction can be obtained by measurement of q_o and the other quantities involved. For cases when the Prandtl number differs from unity but is constant and the flow is turbulent, similar relations between the heat transfer and the skin friction may be derived (reference 18). These relations, however, are not exact and, although they do indicate the existence of a relationship between q_o and τ_o, they are by themselves not reliable enough to form the basis of measurements for τ_o. In such cases calibration procedures have to be relied upon. Ludwieg (reference 19) has successfully used this principle for the measurement of wall shearing stresses in turbulent flows at low speeds. His instrument consists of a small electrically heated element flush with the surface on which the measurement is to be made and thermally insulated from it. The heat flow q_o is measured by the amount of electrical energy supplied to the element. The temperatures of the element and the free stream are measured by thermocouples. It must be pointed out that in this case the general relation between q_o and τ_o must be modified to account for the fact that the thermal layer and the friction layer do not originate at the same point. Ludwieg calibrated his instrument by measurements of q_o with known values of the friction force, so that his measurements are not affected by theoretical assumptions on the relation between τ_o and q_o. The use of this type of instrument for high-speed flow investigations has, however, one serious drawback. It is extremely difficult to provide known shearing stresses for calibration purposes. For instance, it is no longer possible to use the known relation at low speeds between pressure drop in a two-dimensional channel and the shearing stress on the walls. Furthermore, it is open to question whether a heat-transfer instrument calibrated in flows with fully developed turbulent boundary layers can be used for the measurement of skin friction in laminar flows, and vice versa. On account of these difficulties it was felt that a method measuring the shear force directly would be superior to the heat-transfer method.

Direct force measurement.- In principle the method of direct force measurement is very simple. The frictional force is allowed to move a small element of the surface in the direction of the flow and against some restoring force. This movement is calibrated to indicate the magnitude of the force. This method was used by early investigators like Froude and Kempf in determining the fluid resistance of bodies in water. A more recent application is that of Schultz-Grunow (reference 20), who used it for measurements of τ_o in a low-speed wind tunnel. Since this method does not rely on any physical assumptions regarding the nature of the boundary-layer flow it is inherently very suitable for

surface-friction measurements. There are, however, several difficulties and possible sources of error in the actual use of this principle, especially for applications to supersonic flow. The moving element has to be separated from the rest of the surface by small gaps. These may cause changes in the velocity and pressure distribution in their immediate vicinity and so distort the measurements. Again, for local measurements the force element has to be very small compared with the dimensions of the body on which the friction measurements are to be made. This is of special importance in cases where there are large pressure gradients in the direction of flow. The magnitudes of the friction forces on a small element are bound to be small so that the force-measuring mechanism has to be extremely sensitive. Investigations of these difficulties showed that, nevertheless, the direct force-measurement method was quite feasible and practical.

DEVELOPMENT AND DESIGN OF SKIN-FRICTION INSTRUMENT

Although the principle underlying the direct measurement of skin friction (as outlined in the last section) is quite straightforward, its actual application to flow measurements is far from simple. This is especially true for measurements at high speeds. An instrument based on this principle can be used with confidence only after rather extensive investigations and considerations of the features likely to introduce errors in the measurement. This section will be concerned with the investigations undertaken to evaluate the applicability of the direct skin-friction-measurement method and the design of an instrument based on the results of these investigations.

The main features to be investigated in determining the actual feasibility of the method may be briefly summed up as follows:

(a) Effect of the gaps in the surface on the skin-friction measurement

(b) The practicability of accurately measuring small forces with apparatus having extremely small physical dimensions

(c) The effect of external vibrations and temperature changes on the instrument during measurement

Effect of Gaps

That the gaps between the surface of the flat plate and the force element may have some effect on the force measured is quite clear from the fact that in the gaps the condition of no slip at the surface is

no longer satisfied. The break in the continuity of the boundary may be regarded as a sudden disturbance in the slope of the velocity profile at the wall (i.e., the shearing stress τ_0). The magnitude of this disturbance evidently depends on the dimensions of the slot as well as the characteristics of the flow in its vicinity. The fact that for small surface gaps the disturbance in pressure is negligible forms the basis of the well-known method employed in the measurement of static pressures in moving fluids. Since pressure and velocity disturbances are related, it is reasonable to expect that for small gaps the associated velocity disturbance would also be small. In order to substantiate this heuristic reasoning and to arrive at a somewhat more precise idea of the "smallness" of the gaps which would not disturb the velocity profile, tests were made on flat plates with slots in the surface. A slot width of 0.01 inch was used for the study in supersonic flow. This slot dimension was chosen as being a practical one for actual use in the instrument to be developed. The flow over the plate surface was observed by means of schlieren photographs. Figures 1 and 2 are typical schlieren photographs of the flow past the slots with laminar and turbulent boundary layer, respectively. It was found that the plate surface and the element had to be in the same plane to almost an optical degree of flatness before the shock waves disappeared on the schlieren. The laminar-boundary-layer photograph (fig. 1) indicates no detectable disturbances due to the presence of the slots. In the turbulent case (fig. 2) (there being a steeper velocity gradient at the plate surface) very faint waves can be seen originating at the gap locations. In order to estimate the strength of these waves, an attempt was made to measure the pressure rise through them by means of a 0.04-inch-diameter static-pressure probe and an alcohol manometer. No indication of pressure variation could be obtained. Since experience with similar probes has shown the instrument to be an extremely sensitive one, it was concluded that the effect of the slots was negligible. This conclusion was further confirmed by a detailed exploration of velocity profiles in the vicinity of a sample slot. The profiles on a flat plate with a relatively large slot of about 0.2 centimeter were measured with a 0.0005-inch-diameter platinum hot-wire. Since the boundary layers at high speeds are too thin to allow accurate profile determination, these measurements were carried out in a low-speed wind tunnel. The boundary layers were relatively thick (about 1 cm) and the hot-wire measurements quite accurate. In order to retain some measure of dynamical similarity with the slot in the high-speed tunnel, the Reynolds number based on the gap width and free-stream velocity, density, and viscosity was kept approximately the same in the two cases. The results of these measurements are shown in figure 3. The slope and shape of the velocity profiles in the vicinity of the slot, and hence the shearing stress, are seen to be essentially unaltered by the presence of the slot. It is interesting to note the profile measured in the gap itself. A small finite velocity is indicated at the wall level but the slope of the rest of the profile is not

sensibly affected. The profile immediately behind the slot does not indicate any trace of the disturbance. The velocity profiles shown in figure 3 are for a turbulent boundary layer on the flat plate. The effect of the gap on a surface with laminar boundary layer would be even less.

Measurement of Small Forces

Almost all the usual methods employed in the measurement of small forces have one common feature in that they all utilize a small linear or angular movement produced by the force's being measured against some mechanical restoring force. The principal methods available are:

(a) Mechanical devices utilizing the torsion of a thin wire

(b) Optical methods

(c) Resistance wire gages

(d) Reactance gages

The mechanical torsion wire is essentially very simple and is utilized extensively in laboratory measurements of small forces (e.g., surface tension of liquids). Considerable effort was expended in an attempt to employ this method for the measurement of skin-friction forces. A test setup, however, showed that it could not be used to advantage with complicated lever systems which would destroy the simplicity and accuracy of the method.

Among the optical methods, the use of interferometry for the accurate measurement of small displacements is well-known. The extreme sensitivity of this method, however, requires almost perfect vibration isolation of the optical elements and thus makes a practical application in a case like the present extremely difficult. Two other optical methods were investigated. The first of these employed optical levers to magnify small angular changes, while the second used the fact that the width of the diffraction pattern from a narrow rectangular slit is proportional to the width of the slit. While extremely simple in their application, these methods were found to be not accurate enough.

The resistance strain gage, extensively used in experimental structural analysis and recently also in wind-tunnel balance systems, works on the principle that a change in strain in a thin conducting wire is accompanied by a change in electrical resistance of the wire. Since the percentage change in resistance is of the same order of magnitude as the percentage strain and the wire material cannot be

stressed beyond its elastic limit, rather elaborate electrical equipment is necessary for precision measurements with this type of gage. Its use is further complicated by the necessity for temperature compensation, for changes in temperature would directly affect the resistance of the strain-gage wire. A test apparatus employing the wire strain gage showed that this method did not have the accuracy or stability required for the measurement of small forces of the order of 100 milligrams.

The reactance-type gage is similar to the resistance gage inasmuch as it also employs a mechanical movement to produce a corresponding change in an electrical quantity. In this case, however, it is possible for the percentage change in reactance to be several orders of magnitude larger than the percent mechanical change. The change in reactance can thus be easily and accurately measured. The particular form of reactance gage or pickup chosen for the present application is a small 5/16-inch-diameter, 7/16-inch-long variable differential transformer manufactured commercially (Schaevitz Engineering Co., Camden, N. J.). It consists (see fig. 4) essentially of three coaxial coils, one primary and two secondaries. A small iron core forms the controlling element of the transformer. The primary coil is energized with high-frequency (20 kc) alternating current so that the solenoidal force on the core is effectively eliminated. The output of the secondary coils connected in opposition is a function of the core position (fig. 5). The sensitivity of the transformer is of the order of 0.03 volt per 0.001-inch core displacement at 5 volts input to the primary. This corresponds to a full-scale deflection on a Hewlett-Packard vacuum-tube voltmeter. The output change is large enough for measurement of core movements of less than 1/10,000 inch to approximately 1-percent accuracy.

Effect of External Vibrations and Temperature Changes

Since the skin-friction instrument was intended for use in wind tunnels which are always subject to vibrations, actual measurements of the frequencies and amplitude of the tunnel vibrations were made with a standard vibration analyzer. These measurements showed that the predominant external frequencies were at approximately 200 cycles per second and 20 cycles per second. The maximum amplitude of vibration was about 0.001 inch at the lower frequency. In view of this the core suspension system of the instrument was designed with a natural frequency much lower (about 5 cps) than the external vibrations. Since the external vibrations actually have a continuous frequency spectrum rather than just discrete frequencies, it is impossible to eliminate entirely the effect of these vibrations. As a result the transformer core may oscillate to a small extent about some mean position or may be effectively displaced from its rest position. It is therefore important to operate on a part of the output curve (fig. 5) such that

the oscillations do not make the core cross the minimum or "zero" point of the curve. The effect of the external vibrations was further minimized by viscous damping and distribution of the mass of the oscillating system so that its center of gravity and center of percussion were approximately coincident.

The transformer pickup was tested for temperature effects and it was found that temperature changes of $\pm 20^{\circ}$ C have no effect on the output. In the actual design one further precaution would be required. The link system carrying the core must be so designed that thermal changes leave the core position unaffected.

To summarize the above investigations the following design requirements were set up for the shearing instrument.

(a) The instrument is to be used primarily for two-dimensional measurements in the GALCIT 4- by 10-inch transonic wind tunnel (see reference 21 for description). The small size of the test section demands that the instrument be of extremely small dimensions.

(b) The moving element and the flat plate must at all times be at the same level. Even small inclinations (of the order of $1/50^{\circ}$) of the element would introduce large errors in the measured forces. The gaps between the force element and the plate surface must be as small as possible.

(c) The force-measuring system must be sensitive enough to measure skin-friction forces in both laminar and turbulent boundary layers in the available range of Mach number and Reynolds number ($M \approx 0$ to 1.5 and $R = 10^4$ to 10^6). This corresponds to shearing stresses ranging from approximately 1 milligram per square centimeter to about 1 gram per square centimeter.

(d) The instrument readings must be immune to vibrations from the tunnel and to temperature changes.

Description

The instrument developed is shown schematically in figure 6. The flat plate used for the measurements is supported from the ceiling of the tunnel. The small 0.2- by 2.0-centimeter moving element is supported by a specially designed four-bar linkage which allows it to translate in the plane of the plate without rotation. The rectangular slot in the plate through which the force element is exposed to the flow has accurately lapped sides. The gaps at the leading and trailing edges of the element are approximately 0.004 inch and 0.008 inch, respectively. The element is lapped flush with the surface of the plate after assembly.

The degree of flatness is checked by means of interference fringes. The flexure links in the suspension system can be replaced by links of various thickness (0.005 in., 0.01 in., 0.025 in.) thus providing a large range of variation of the restoring force. Movement of the force element is conveyed to the core of the transformer by a nonconducting rod and metal-yoke arrangement. The transformer is held in position by a brass cage which can be adjusted for position by means of set screws. The linkage assembly seats in recesses in the flat-plate support which also serves as a streamlined windshield. The damping of the force element is obtained by two dampers which are carried by the yoke of the flexure link assembly and are immersed in Dow Corning silicone fluid of 500-centistoke viscosity. The area of the surface of the dampers was adjusted to provide slightly less than critical damping to the oscillating system. The mass of the damping system is also utilized to obtain coincidence of the center of percussion and center of gravity of the linkage. The effectiveness of damping and vibration isolation can be seen from the sample calibration curve in figure 7. Calibration of the instrument is obtained by means of a pulley arrangement with jewel bearings. The pulley was constructed from magnesium (for lightness) and balanced in rotation so that it introduced no errors in calibration. The frictional torque of the jewel bearings is of the order of 10^{-6} milligram-centimeter and hence is negligible. A single-fiber nylon thread provided the means of attaching small fractional weights to the linkage during calibration. Sample calibrations indicating the repeatability and linearity of the force-measuring system may be seen in figures 8 and 9. The entire force linkage and coil system is enclosed in the windshield which has a frontal area of $\frac{1}{4}$ inch by $2\frac{1}{2}$ inches. When in use, the inside of the windshield is sealed off from the flow, except for the gaps around the force element itself. These gaps serve as vents for equalization of pressure between the inside and the outside of the force element. The electrical leads are likewise sealed. During operation, the pressure across the gaps could be observed on an alcohol manometer. One lead of the manometer was connected to a static-pressure orifice on the plate just ahead of the element and the other indicated the pressure inside the windshield.

Electronic Equipment and Circuit Details

A block diagram of the manner of use of the skin-friction instrument is shown in figure 10. A precision Hewlett-Packard low-frequency oscillator acted as the power supply for the differential transformer. The output from the secondaries connected in opposition was read on a Hewlett-Packard vacuum-tube voltmeter to an accuracy of ±1 percent. Since the output is directly proportional to the input, the latter was always kept at the same fixed value before taking a skin-friction reading. In order to avoid errors introduced by switching, a second

vacuum-tube voltmeter was used to read the input to the primary coil of the transformer. The variable resistance of 20,000 ohms (shown in fig. 10) across the secondary coils of the transformer unit was found useful in reducing the magnitude of the output at the "balance point" (symmetrical core position) to approximately 0.001 volt. This effectively increased the range of readings on the voltmeter scale.

INCOMPRESSIBLE-FLOW MEASUREMENTS

At low speeds the assumption of incompressibility of the air is a close approximation and leads to considerable simplification in theoretical treatment of the boundary-layer equations. This is especially important for the case of laminar flow past a flat plate at zero incidence, for in this case an exact solution of the Prandtl equations is possible. This is the well-known Blasius solution. For the much more complicated case of turbulent flow, theoretical solutions of the equations are not possible. However, as shown by Prandtl, Von Kármán, and others, even for turbulent flow important theoretical deductions regarding the skin friction and nature of the boundary-layer flow can be made. The logarithmic law for skin friction at high Reynolds numbers is a well-known example.

In order to establish the general validity of the present method of measurement, the skin-friction instrument was adapted for measurements in low-speed flow. Two types of flow were investigated, the so-called Blasius flow and fully developed turbulent flow past a flat plate. It is believed that the results of this investigation, apart from confirming the accuracy of the method of measurement, have some interest and value of their own.

Experimental Equipment and Setup

The general experimental arrangement for the low-speed measurements is shown in figure 11. The GALCIT "Correlation" tunnel was used for this investigation. This is a specially designed wind tunnel for turbulence measurements, with a very low free-stream turbulence level (u'/U of the order of 0.03 percent).

Since the magnitude of the shearing stress τ_o at the low speeds and Reynolds numbers ($U \approx 400$ cm/sec to 1600 cm/sec and $R \approx 6 \times 10^4$ to 6×10^5) is extremely small, being of the order of 1 milligram per square centimeter, the small (0.2- by 2.0-cm) element of the instrument was replaced by a larger one measuring 1.15 by 6.3 centimeters. Phosphor bronze 0.005-inch-thick by 1/4-inch-wide flexure links were

used instead of the regular 0.01-inch-thick links. This increased the sensitivity of the force-measuring system by a factor of approximately 4. The instrument was attached to the flat plate by means of a metal yoke, as shown in figure 11. The surface used for the low-speed boundary-layer measurements was a sharp-nosed 12- by 36-inch flat plate made out of 5/16-inch-thick plastic material. The surface of this plate had a highly polished finish. There was, however, some irregularity present in the form of waviness in the surface. No attempt was made to remedy this because the amplitude of the surface waves was too small (of the order of 0.005 in. in a length of 2 ft) to be of any significance. The shearing-stress instrument could be located in two alternative positions on the plate. The change in position allowed an additional variation in the Reynolds number (i.e., in addition to the change made possible by free-stream velocity changes). The measuring element consisted of a small piece of the plastic (identical with the plate material) rectangular in shape and attached to the force linkage so that the lower surface of this element was flush with the surrounding plate surface. The element was separated from the rest of the surface (on all four sides) by a 1/32-inch-wide gap. That the element was really flush with the plate surface could be checked accurately by means of an optical arrangement consisting of a reflecting surface and a magnifying lens. The force linkage system was shielded and sealed off from the flow by a streamlined brass shield. Total-head profiles could be measured at either location of the shear stress measurement by means of a total-head tube and a portable micrometer head with a least count of 0.01 centimeter. The total-head-tube dimensions are shown in figure 12. A precision alcohol manometer of the Zahm type was used for the measurement of pressures. Total-head or static-pressure traverses could be made in the direction of flow by means of a motorized traverse.

Experimental Method

Laminar boundary layer.- In order to establish the type of boundary-layer flow, velocity profiles were measured on the surface of the plate for a range of velocities covering the Reynolds number range over which the shearing force was to be measured. These profiles (fig. 12) showed good agreement with the theoretical Blasius profile. That the flow was indeed laminar was further substantiated by observing laminar-boundary-layer oscillations (Tollmien-Schlichting waves) by means of a 0.0005-inch-diameter platinum hot-wire placed near the surface of the plate (approximately at a distance of 0.1 cm). The regular laminar oscillations could be changed to random turbulent fluctuations by introducing disturbances in the boundary layer ahead of the point of measurement. In addition to substantiating the pressure-profile measurements, this precaution served another significant purpose: It removed any suspicion that the force of friction measured by the

shearing-stress instrument was due to anything other than pure laminar flow. It is known that laminar flow does not break down at a definite (time-independent) distance from the leading edge. Transition to turbulent flow is evidenced by the appearance of "bursts" of turbulent fluctuations (see references 22 and 23) superposed on the laminar oscillations. In case such "bursts" were present, the force measurements would not correspond to purely laminar friction.

The actual shearing-force measurement consisted of taking the difference of voltmeter readings with and without flow for each point measured. This process eliminated any possible errors due to zero shift in the measuring system. In the earlier stages of the experiments, the instrument was calibrated before and after each set of shearing-force measurements. Since the calibration (fig. 8) did not perceptibly change, this process was later replaced by one of making periodic checks. The calibration remained constant during the entire duration of the measurements to better than 1 percent.

It was not possible to fulfill exactly the condition of zero pressure gradient required by Blasius flow. However, the deviation from $\frac{dp}{dx} = 0$ was small ($\Delta p/q$ less than 1 percent) in the range of the measurements reported, and it was possible to adjust the plate in pitch to give approximately a constant favorable pressure gradient. This was actually measured and the force measurements were corrected accordingly when making the comparison with theory (see section "Laminar boundary layer").

Since the force-measuring system of the skin-friction instrument is essentially a suspension, it is affected by tilt of the instrument. In order to determine and account for the error introduced by changes in the attitude of the instrument due to deflection of the flat plate, the following procedure was adopted. The element was covered with a streamlined shield which left it free to move but shielded it completely from the flow. The difference between the "no flow" and "with flow" readings then gave the effect of the plate tilt. This error was determined for the entire range of velocities since the plate deflection is dependent on the air loads of the system. Figure 13 shows the effect of plate tilt on the instrument. The mean curve of figure 13 was then used to correct the instrument readings. The maximum correction was less than 10 percent. The scatter in figure 13, at about 1300-centimeter-per-second free-stream velocity, is due to excessive vibrations induced by resonance with a natural mode of oscillation of the tunnel. The above procedure of correction was necessary only for the measurements made at the forward location ($x = 28.6$ cm) of the instrument. For the rear location ($x = 58.0$ cm) the plate support was modified to increase its rigidity. This effectively eliminated any plate tilt.

As will be noticed from figure 14, the scatter of the experimental points is considerably less at the rear location than in front. During all the measurements precautions were taken to ensure that there was no flow through the gaps between the force element and the plate. This was done by sealing the windshield onto the plate and checking the pressure difference between its inside and the plate surface on an alcohol U-tube.

Turbulent boundary layer.- The experimental procedure for the skin-friction measurements on the flat plate with turbulent boundary layer was essentially similar to that adopted for the laminar case. The boundary layer was tripped, that is, made turbulent, by a roughness element at the leading edge. The type of flow was identified by the shape of the velocity profile (see fig. 12) as well as by the random fluctuations shown by a hot-wire placed close to the flat-plate surface. That the particular manner in which the boundary layer was tripped was of no essential importance to the skin-friction measurements was ascertained by causing the transition in different ways (e.g., raising the free-stream turbulence level with the help of wire screens in the tunnel or, alternatively, by adjusting the plate orientation so that the stagnation point on the leading edge was located on the side opposite to the surface of measurement). In all the measurements reported here the boundary layer was tripped by a single roughness element, a wire, at the leading edge of the flat plate. This method was adopted in preference to the others because it gave a convenient method of fixing the point of transition almost at the leading edge of the flat plate. Thus, any arbitrariness about the length entering into the calculation of the Reynolds number of the turbulent-boundary-layer flow is eliminated. That the boundary layer was really turbulent close to the leading edge was confirmed by a total-head-tube survey in the direction of flow with the tube touching the plate. The change from laminar to turbulent flow is then indicated as a sharp rise in total-head loss by the total-head tube.

Results and Discussion

Laminar boundary layer.- The direct skin-friction measurements are shown in figure 14. They cover a range of Reynolds numbers from about 6×10^4 to 6×10^5. In comparing the experimental values with theory, the values of the shearing stress, as indicated by the instrument, were corrected for experimental error due to plate deflection and the effect of pressure gradient. The method of correction for plate deflection has been discussed before. It applied only to the measurements at the forward location ($x = 28.6$), since at the rear location there was no deflection of the plate and supports. The effect of pressure gradient was taken into account by use of Von Kármán's integral relation for the

boundary layer. Since dp/dx was not exactly zero its magnitude was ascertained by actual measurement. Figure 15 shows these pressure-gradient measurements. It will be noted from figure 15 that at any given value of free-stream velocity at the point of measurement dp/dx has very nearly a constant value over the entire length of the flat plate. Using this fact, the momentum integral relation may be written for a given point as:

$$\frac{\Delta c_f}{c_{f_o}} = \frac{H + 2}{q} \frac{dp}{dx}$$

where

$$\Delta c_f = c_{f_o} - c_f$$

is the difference of the local skin-friction coefficient from the Blasius value c_{f_o}; H, the ratio of displacement to momentum thickness; $q = \frac{1}{2} \rho_\infty U^2$, the dynamic pressure of the free stream; and dp/dx, the constant pressure gradient over the flat plate. Thus for a fixed value of x and q, knowing the pressure gradient and using the Blasius value of $H = 2.605$, the effect of pressure gradient can be estimated. That the use of the Blasius value for H is justified for the purpose of such calculations may be seen from the profiles of figure 12, which show that for the small values of dp/dx the departure from the Blasius profile is slight. All the measured values of c_f shown in figure 14 have been corrected for the effect of pressure gradient in the manner outlined above. The magnitude of the maximum correction was of the order of 8 percent in c_f. The agreement with the theoretical straight lines of Blasius is seen to be execellent. The experimental points shown in figure 14 are the results of several observations taken at different times and to some extent indicate the repeatability of the measurements. Also shown in the same figure are values of c_f obtained from the profiles of figure 12 by measuring the slope at the wall and correcting for the dp/dx effect.

From the discussion it is evident why the few scattered experiments on flat-plate skin friction often give too large values of c_f. The reason for this is the extreme sensitivity of the laminar layer to pressure gradients. If the pressure gradient is slightly negative the layer is stable and laminar, but the skin friction is too high. If the pressure gradient is slightly positive, turbulent "bursts" are likely to appear and c_f is measured too large again.

Turbulent boundary layer.- The measurements of local skin friction with turbulent boundary layer on the plate were also corrected for pressure-gradient effect in a manner similar to the one adopted for the laminar case. For the purposes of this correction, the values of H and θ were obtained by assuming a power-law velocity profile in the boundary layer with a power index of 1/7. The magnitude of the corrections in this case was of the order of 2 percent in c_f. Figure 14 shows the excellent agreement between the experimental values and the theoretical curve given by Von Kármán for the skin friction on a flat plate with turbulent boundary layer. This agreement is believed to be fortuitous to some extent, for the constants in Von Kármán's logarithmic relation

$$\frac{1}{\sqrt{c_f}} = A + B \log_{10} \sqrt{Rc_f}$$

are not predicted by theory but have to be determined from experiment. The values of A and B, as found from the present experiments, were -0.91 and 5.06, respectively, as compared with 1.7 and 4.15 in Von Kármán's formula. This difference in the constants is perhaps to be attributed to the fact that A and B are not absolute constants but depend somewhat on the conditions of experiment, for example, on Reynolds number and so forth. One can only conclude that the logarithmic formula of Von Kármán is a fair approximation for incompressible flow. Because of the limited range of the tunnel, turbulent-boundary-layer flow at Reynolds numbers higher than 6×10^5 could not be studied.

COMPRESSIBLE-FLOW MEASUREMENTS

It was originally intended to investigate two simple representative types of viscous compressible flow, namely, the steady laminar and turbulent flows on an insulated flat plate with zero pressure gradient. It has already been pointed out that even in the incompressible-flow measurements considerable difficulties were encountered in obtaining experimental conditions which closely approximated the conditions forming the basis of theoretical analyses. In the case of the compressible-flow measurements, the additional limitations imposed by small size of the wind tunnel and by the effects accompanying compressibility were sometimes so severe that they resulted in either changing some of the original aims or even abandoning them. For instance, it was highly desirable to obtain skin-friction measurements for the case of a laminar boundary layer, for which rather extensive theoretical information is available. Experimentally, however, it was found impossible to maintain laminar flow without rather strong favorable pressure gradients (see

section "Laminar-Boundary-Layer Measurements"). Hence, the measurements in the laminar case had to be restricted to a single set of measurements of skin friction with known pressure gradients. If the following pages indicate a lack of completeness and continuity it is largely a result of features inherent in the phenomenon being investigated.

Range of Wind Tunnel

The investigations were carried out in the 4- by 10-inch GALCIT transonic wind tunnel. This is a continuously operating closed-return type of tunnel equipped with air filter, silica-gel dehumidifier, and a flexible nozzle (reference 21). The Mach number range of this wind tunnel extends from about $M = 0.25$ to $M = 1.5$. Since all the skin-friction measurements were carried out at a fixed location of the force-measuring element, the possible means of Reynolds number control were limited to:

(a) Velocity changes

(b) Stagnation-temperature changes

(c) Stagnation-pressure changes

Of these, the last two leave the Mach number unaffected and hence are very suitable for isolating Reynolds number effects from Mach number effects. Unfortunately, the range of Reynolds number variations possible by these means was extremely limited in the present case, and for all practical purposes changes in Reynolds number were possible only through Mach number changes. The available range of Reynolds numbers was thus confined to approximately $R = 3 \times 10^5$ to $R = 1.2 \times 10^6$. Since experimental limitations severely limited the investigation on laminar boundary layers, the main part of the compressible-flow measurements was confined to turbulent-boundary-layer flow.

Experimental Procedure - Turbulent Boundary Layer ($M = 0.2$ to $M = 0.8$)

The size of the flat plate and the general arrangement is shown in figure 6. It will be noticed that the flat plate has a sharp leading edge, one side of the plate (the measuring surface) being parallel to the flow. For the case of the high-subsonic-flow measurements, this configuration served to produce turbulent boundary layers starting at the leading edge of the plate, the stagnation point in this range being on the surface opposite to the measuring surface. However, in order to remove any doubt regarding the nature of boundary-layer flow for most

of the turbulent-boundary-layer measurements, a 0.005-inch-diameter steel wire cemented about 0.2 centimeter from the leading edge of the plate was used as a trip. Figure 16 shows that the experimental points with and without the wire trip agree very well. As shown in the sketch (fig. 6), the flat plate does not quite span the width of the wind tunnel. Previous experience in investigating high-speed flow phenomenon had indicated that the side-wall boundary-layer effects were minimized by shortening the span of two-dimensional models an amount equal to the displacement thickness of the boundary layer. In the present case this amounted to approximately 1/4 inch on either side of the flat plate. Detachable side pieces could be installed on the flat plate so that it effectively spanned the entire span of the tunnel. As a matter of precaution, skin-friction measurements were made both with and without these side pieces. Figure 16 shows the agreement between these measurements. Figure 17 shows representative velocity profiles measured with a total-head tube and computed on the basis of constant energy per unit mass through the boundary layer. The turbulent-boundary-layer skin-friction measurements shown in figure 16 are the results of some eight separate sets of observations. During these measurements every effort was made to eliminate or account for errors which might affect the reliability of the results. The following points were especially important.

Pressure gradients.- Figure 18 shows representative pressure distributions measured with a static-pressure probe and an alcohol micromanometer. Since the probe travel was limited, it was not possible to obtain the pressure distributions over the entire length of the plate. However, it is known from previous calibration checks of the flow in the tunnel that the flow is quite smooth, so that the pressure distributions shown in figure 18 extend continuously in either direction. As seen in figure 18 the pressure gradients are quite small but not zero. To estimate the effect of these small pressure gradients on the measured skin friction, use was again made of the Von Kármán momentum integral. It was assumed for these computations that the turbulent-boundary-layer profiles could be represented by a power law. Justification for this is apparent from figure 17. The momentum integral relation for compressible flow may be written as

$$c_f = 2\frac{d\theta}{dx} - \left[\left(2 - M^2\right) + \frac{\delta^*}{\theta}\right]\left(\frac{\theta}{q}\frac{dp}{dx}\right)$$

where the symbols have their usual meanings. It is well-known that as a first approximation θ, the momentum thickness, may be said to be unaffected by compressibility effects (equivalent to an assumption of ρu = Constant). Using this and neglecting the effect of pressure gradients on θ and H one may write

$$H_c = H_i\left[1 + \frac{\gamma - 1}{2} M^2\left(1 + \frac{1}{H_i}\right)\right]$$

where $H_c = \left(\frac{\delta^*}{\theta}\right)_{compressible}$ is the shape parameter for compressible flow and H_i, the same for incompressible flow. Assuming a 1/7-power velocity profile one can use the incompressible-flow values of θ_i and H_i given by

$$\theta_i = 0.036\left(\frac{\nu}{U}\right)^{1/5} x^{4/5}$$

$$H_i = 1.286$$

The effect of pressure gradient then may be approximately determined by writing the integral relation as

$$\Delta c_f = -\left[\left(2 - M^2\right) + H_c\right]\frac{\theta_i}{q}\frac{dp}{dx}$$

where

$$\Delta c_f = c_f - 2\frac{d\theta}{dx}$$

and using the approximate values for H_c and θ_i from above and $\frac{1}{q}\frac{dp}{dx}$ from figure 18. These calculations show that the maximum error in the local skin-friction coefficient is less than 1 percent.

Temperature equilibrium.- In order to realize the condition of zero heat transfer on the flat plate it is extremely important that thermal conditions be stable during operation of the wind tunnel. The method of supporting the flat plate along its center line by a thin strut minimized any losses due to conduction. In addition, the measurements were carried out with the stagnation temperature of the air in the neighborhood of the room temperature. The stagnation temperature could be maintained constant to approximately $\pm 1^\circ$ C. The usual time taken by the skin-friction-instrument readings to steady down was of the order of 2 minutes or so after the tunnel flow and the stagnation temperature had stabilized. That conditions on the flat plate had really reached the state of zero heat transfer was confirmed by a calibrated thermocouple probe touching the surface of the plate. The thermocouple output

was read by a precision Leeds and Northrup potentiometer on which temperature changes of about 0.01° C could be easily detected. It was found that, if any changes in stagnation temperature were made, thermal equilibrium on the plate was attained after 2 or 3 minutes of stabilization. During the period of stabilization the effect on the skin friction was observed to be strikingly large. It is for this reason that these precautions are strongly stressed here. As a point of interest, the temperature recovery on the plate, as indicated by the thermocouple probe, is shown in figure 19. Also shown for comparison is the usual empirical relation for temperature recovery on a flat plate with a turbulent boundary layer. The results in figure 19 are to be regarded only as of a qualitative nature, since no account is taken of the effect of the probe itself on the temperature recovery. The main reason for these measurements was to confirm that thermal equilibrium had been reached on the plate. On the basis of these experiments, the usual procedure followed was to let conditions stabilize for over 10 minutes or so before recording the skin-friction readings.

Gap flows.- During all the measurements reported here there was no flow through the gaps separating the force element from the plate. This was ascertained by means of an alcohol U-tube which, for all the reported measurements, indicated less than 0.5 centimeter of alcohol difference in pressure across the gaps between the inside of the shield and the outside flow. In order to determine the degree to which the skin-friction readings were affected when there was flow through the gaps, a test setup was arranged. Any desired pressure difference could be maintained across the gaps by means of a suction-pump arrangement connected to the inside of the sealed windshield of the skin-friction instrument. It was found that, with no flow in the tunnel, pressure differences of about 5 centimeters of alcohol caused an error of about 3 percent in the reading of the instrument. This was true regardless of the direction of the pressure difference. Of course these values would be somewhat different under actual flow conditions. But they certainly would not change by an order of magnitude and, since during the measurements the pressure difference was always less than 1/2 centimeter of alcohol, only negligible errors could have been caused.

Errors due to deflections and vibrations.- These effects were checked for in a manner similar to one adopted during the incompressible-flow measurements. The force element was covered up with a streamlined shield protecting it from the flow but leaving it completely free to move. If any deflection of the structure supporting the instrument occurred it would show up as a reading. A similar effect would be produced in the case of imperfect vibration isolation. It was found that the installation of the instrument in the wind tunnel was perfectly rigid and that the vibration isolation and damping were quite adequate, so that no errors were introduced on these accounts.

Occurrence of transonic regions and shock waves.- The upper limit (approx. $M = 0.8$) of Mach number for the high-subsonic-flow measurements reported here was set by the appearance of shock waves near the leading edge of the flat plate. It was found that with the appearance of a transonic shock at the leading edge of the plate no sudden changes could be observed in the skin friction at the point of measurement. Nevertheless, in order to retain clean experimental conditions it was decided to restrict the measurements to flow without shock waves.

Alinement of force element.- During the course of the experiments reported here the alinement of the force element with the rest of the plate surface was periodically checked optically by means of interference fringes. During the entire period of measurement the alinement remained the same to within $\pm 11 \times 10^{-6}$ inch (corresponding to a fringe movement of one fringe width of cadmium light).

Results of Measurements for Turbulent Boundary Layer at High-Subsonic Speeds

The experimental values of local skin-friction coefficient as measured by the skin-friction instrument are shown in figure 16. In computing the skin-friction coefficient and the Reynolds number, free-stream values of density and viscosity have been used. As seen, the experimental points lie quite close to (but definitely below) the curve for incompressible flow, showing that the effect of compressibility in the range of Mach numbers up to $M = 0.8$ is quite small but in the expected direction. The experimental scatter is of the order of ± 5 percent about the mean.

As briefly mentioned before, the effect of heat transfer on the skin friction was found to be quite important. Quantitative measurements of this effect were not possible with the present equipment, but in general the following was observed: If after equilibrium conditions had been attained in the wind tunnel the stagnation temperature in the settling chamber was lowered, the skin-friction reading showed a marked increase. The magnitude of this increase seemed to depend on the rate of heat transfer for it could be controlled to some extent by controlling the rate of cooling of the air in the settling chamber of the tunnel. Roughly speaking (for no precise measurements could be obtained), during the period of heat transfer the skin friction changed by about 50 percent of the steady-state (zero heat transfer) value. Raising the stagnation temperature resulted in lower skin-friction readings. Upon reattainment of steady conditions, the skin friction always regained its zero-heat-transfer value. As indicated by these observations, the resultant effect of heat transfer from or to the flat plate is the opposite of what one

expects from theoretical considerations. No explanation has been found for this anomalous behavior.

Laminar-Boundary-Layer Measurements

It has been mentioned before that because of experimental difficulties it was not possible to obtain laminar boundary layers of sufficient extent without favorable pressure gradients. There are several reasons for this. Laminar boundary layers are notoriously sensitive to leading-edge conditions. For supersonic-flow measurements it is necessary to use the type of "half-wedge" leading edge employed in the present experiments (see reference 24). This type of leading edge is not very suitable for subsonic work, for it requires the stagnation point to be on the side of the surface of measurement. In the present setup this would require the flat plate to be at a relatively large positive angle of attack. This was not feasible. For the case of supersonic flow with an attached bow wave this difficulty would be obviated. (Actually, in the supersonic-flow measurements other effects prevented any reliable measurements of skin friction with laminar boundary layers. See section "Compressible-Flow Measurements.") As an alternative for obtaining laminar boundary layers on the flat plate, a special attachment was made for modifying the nose shape. As seen in the accompanying sketch, this served the earlier-mentioned purpose

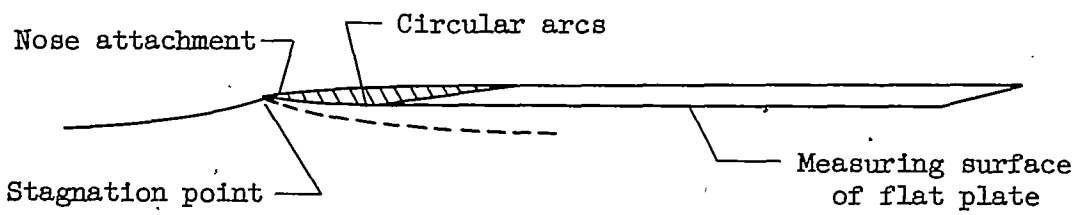

of fixing the stagnation point where desired. With this attachment laminary boundary layers could be obtained on the flat plate at low-subsonic Mach numbers (about $M = 0.3$). At higher subsonic Mach numbers, however, the disturbance caused by the joint between the nose attachment and the leading edge of the flat plate was sufficient to cause transition ahead of the point of measurement. In spite of all efforts to make the joint smooth, laminar boundary layers could not be maintained past the force element. The only way laminar boundary layers could be obtained with this configuration was with the help of stabilizing pressure gradients in the direction of flow. The favorable pressure gradient

was produced by altering the shape of the wind-tunnel wall opposite the flat plate with the help of a tapered hardwood block. The scheme is shown in the accompanying sketch. The pressure gradients prevailing

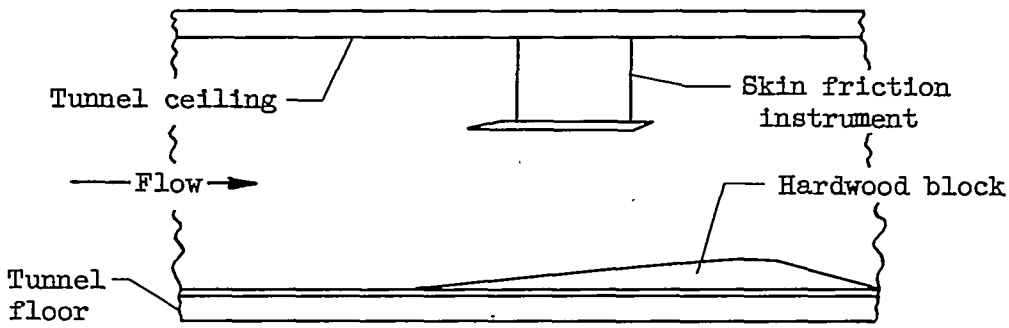

over the flat plate were then measured for each Mach number at which the skin friction was measured. Representative pressure distributions on the flat plate are shown in figure 20. The skin-friction measurements are presented in figure 16. As a point of interest, the skin-friction coefficients are also shown after approximately allowing for the measured pressure gradient; these points are seen to be approximately 15 percent above the Blasius curve for $M = 0$. The $\frac{dp}{dx}$- effect calculation was carried out in a manner similar to that for the turbulent case. Although these measurements cannot be used for comparison with the cases computed by theory, they are believed to be of some value. It will be noticed that, in spite of the large deviation from the condition of zero pressure gradient and the crude method for allowing for pressure-gradient effect, the experimental values follow the general trend indicated by laminar-boundary-layer theory reasonably closely.

Transition Measurements

During the attempts to produce laminar boundary layers a few measurements of skin friction were made with transition to turbulent flow occurring on the flat plate. To the author's knowledge direct measurements of local skin friction in the region of transition have never been reported. The measurements presented here are quite qualitative and do not conclusively demonstrate any results. These measurements were made under conditions of negligible pressure gradients with the flat-plate leading edge adapted for laminar flow (see section "Laminar-Boundary-Layer Measurements"). Schlieren observation of the boundary layer showed that at low Mach numbers (about 0.25) the boundary layer was laminar from the leading edge up to approximately a distance

of 1 centimeter past the force element. The corresponding skin friction was quite close to the Blasius curve for incompressible flow. Increasing Mach number (and hence the Reynolds number) had the effect of rapidly increasing the skin friction until at about $M = 0.6$ the measurements approached the turbulent values. At the same time the appearance of the boundary layer in the neighborhood of the point of measurement could be seen to change gradually from the typical thin, sharply defined laminar boundary layer to a thicker and less sharply defined turbulent one. These measurements are shown in figure 21. A little reflection will show that the rise in local skin friction as measured by the instrument and indicated by figure 21 cannot be explained even qualitatively by the concept of steady transition at a critical Reynolds number, even if one considers transition to occur over a region and not at a point. One reasonable explanation may be advanced if the transition phenomenon is regarded as the result of a statistical appearance of turbulent spots. This point of view, that is, that there is no "transition boundary layer" but that the observed transition region consists of intermittently occurring laminar and turbulent flow, was first mentioned by Dryden (reference 25) and further substantiated by Liepmann (reference 26). The occurrence of transition from this viewpoint has recently been discussed by Professor H. W. Emmons of Harvard University, who related the intermittent transition phenomenon to Charters' contamination and developed from there a phenomenological theory of the transition zone. Turbulent spots occurring in a random fashion may be regarded to be always present in any type of flow. In fully developed turbulent flow the probability approaches unity. With this picture of transition the following explanation of the present measurements seems to be plausible. When the force element is in laminar flow there are hardly any turbulent "bursts" in the flow and, if there are, the chances of one traveling across the element is exceedingly small. As the Reynolds number increases the rate of appearance of the turbulent spots ahead of the element increases rapidly and with it the number passing over the force element. Because of the considerably higher shearing forces associated with turbulent motion, the instrument indicates greater skin friction. It may be mentioned that during the transition measurements reported here the readings of the instrument were quite steady and repeatable. This is to be expected since, because of the inertia of the force element and linkage, the instrument readings would not follow rapid fluctuations but indicate an average.

Measurements in Supersonic Flow ($M = 1.24$ to $M = 1.44$)

Because of experimental difficulties it was possible to make measurements of skin friction in supersonic flow only for the case of turbulent layers. Since laminar boundary layers could not be consistently maintained over the measuring element, no measurements of laminar skin

friction at supersonic speeds are reported here. The inability to maintain laminar boundary layers over the flat plate was due principally to the small size of the wind tunnel and does not reflect in any manner on the skin-friction instrument.

Even in the case of the turbulent-boundary-layer measurements the range of supersonic Mach numbers with attached nose shock wave on the plate was limited to $M \approx 1.37$ to $M \approx 1.44$. Below about $M = 1.36$ a detached bow wave formed ahead of the leading edge. The flow configuration in the neighborhood of the nose with a detached shock wave was such that an expansion occurred around the leading edge followed by a compression shock. Figure 22 is a spark schlieren of this configuration. The second compression shock wave near the leading edge of the plate is due to the 0.005-inch-diameter wire used as a trip for the boundary layer. That there were no sudden changes caused in skin friction due to the bow-wave detachment may be seen from figure 23 where the skin-friction measurements are shown in the form of the ratio c_f/c_{f_i} where c_f is the local measured skin-friction coefficient and c_{f_i}, the incompressible value for the same Reynolds number. Some of the subsonic measurements are also shown in the same figure. During the measurements in supersonic flow shown in figure 23 it was not possible to obtain conditions of zero pressure gradients in the direction of flow. The Mach number distribution over the plate departed from the required uniform one to such an extent as to render the results quite unreliable for comparison with theory. Von Kármán's curve for turbulent skin friction in compressible boundary layer over a flat plate is included in figure 23 only for the sake of interest. Although the experimental points lie quite close to this curve, it cannot be concluded that compressibility lowers the local skin-friction coefficient by an amount given by Von Kármán's empirical curve. The skin-friction measurements presented do, however, represent the actual surface shearing forces present under the conditions of measurement.

CONCLUDING REMARKS

It has been shown that an instrument for the direct measurement of local skin friction can be successfully developed if sufficient care is taken.

Measurements of laminar and turbulent skin friction on a flat plate at zero angle of attack and low-speed flow gave excellent agreement with Blasius' and Von Kármán's skin-friction laws.

Measurements of turbulent skin friction on a flat plate in high-speed flow showed that for subsonic flow the skin friction did not depend

much on Mach number though a slight, expected decrease of the local skin-friction coefficient is noticeable.

The few measurements so far made in supersonic flow (at a Mach number of approx. 1.4) were taken in the presence of a pressure gradient and hence are not so easily and reliably compared with theory as are the other measurements reported here. The very noticeable decrease in skin friction is believed to be real. The determination of exact quantitative values, however, requires a thorough check under both conditions.

California Institute of Technology
Pasadena, California, June 1, 1951

REFERENCES

1. Von Kármán, Th.: The Problem of Resistance in Compressible Fluids. Atti dei Convegni 5, R. Accad. d'Italia, 1936, pp. 222-277.

2. Frankl, F., and Voishel, V.: Turbulent Friction in the Boundary Layer of a Flat Plate in a Two-Dimensional Compressible Flow at High Speeds. NACA TM 1053, 1943.

3. Ferrari, Carlo: Study of the Boundary Layer at Supersonic Speeds in Turbulent Flow - Case of Flow along a Flat Plate. Quart. Appl. Math., vol. 8, no. 1, April 1950, pp. 33-57.

4. Van Driest, E. R.: Turbulent Boundary Layer in Compressible Fluids. Jour. Aero. Sci., vol. 18, no. 3, March 1951, pp. 145-160.

5. Li, T. Y., and Nagamatsu, H. T.: Effects of Density Fluctuations on the Turbulent Skin Friction on an Insulated Flat Plate at High Supersonic Speeds. (To appear shortly in Jour. Aero. Sci.)

6. Fage, A., and Townend, H. C. H.: An Examination of Turbulent Flow with an Ultramicroscope. Proc. Roy. Soc. (London), ser. A, vol. 135, no. 828, April 1, 1932, pp. 656-677.

7. Young, A. D., and Maas, J. N.: The Behaviour of a Pitot Tube in a Transverse Total-Pressure Gradient. R. & M. No. 1770, British A.R.C., 1937.

8. Fage, A., and Sargent, R. F.: Shock Wave and Boundary Layer Phenomena near a Flat Surface. Proc. Roy. Soc. (London), ser. A, vol. 190, no. 1020, June 17, 1947, pp. 1-20.

9. Kovasznay, L. S. G.: The Hot-Wire Anemometer in Supersonic Flow. Jour. Aero. Sci., vol. 17, no. 9, Sept. 1950, pp. 565-572, 584.

10. Gooderum, Paul B., Wood, George P., and Brevoort, Maurice J.: Investigation with an Interferometer of the Turbulent Mixing of a Free Supersonic Jet. NACA Rep. 963, 1950. (Formerly NACA TN 1857.)

11. Ladenburg, R.: Further Interferometric Studies of Boundary Layers along a Flat Plate. Contract No. N7 ONR 399, Task Order I, Office of Naval Res. and Palmer Phys. Lab., Princeton Univ., Dec. 15, 1949. (See also appendix by G. P. Wachtell.)

12. Blue, Robert E.: Interferometer Corrections and Measurements of Laminar Boundary Layers in Supersonic Stream. NACA TN 2110, 1950.

13. Ashkenas, Harry I., and Bryson, Arthur E.: Design and Performance of a Simple Interferometer for Wind-Tunnel Measurements. Jour. Aero. Sci., vol. 18, no. 2, Feb. 1951, pp. 82-90.

14. Charters, Alex C., Jr.: Transition between Laminar and Turbulent Flow by Transverse Contamination. NACA TN 891, 1943.

15. Bershader, Daniel: An Interferometric Study of Supersonic Channel Flow. Rev. Sci. Instr., vol. 20, no. 4, April 1949, pp. 260-275.

16. Ladenburg, R., and Bershader, D.: Interferometric Studies on Laminar and Turbulent Boundary Layers along a Plane Surface at Supersonic Velocities. Rep. No. 1133, Naval Ordnance Lab., June 29, 1949.

17. Von Kármán, Th., and Tsien, H. S.: Boundary Layer in Compressible Fluids. Jour. Aero. Sci., vol. 5, no. 6, April 1938, pp. 227-232.

18. Von Kármán, Th.: The Analogy between Fluid Friction and Heat Transfer. Trans. A.S.M.E., vol. 61, no. 8, Nov. 1939, pp. 705-710.

19. Ludwieg, H.: Ein Gerät zur Messung der Wandschubspannung turbulenter Reibungsschichten. Ing.-Archiv., Bd. 17, Heft 3, 1949, pp. 207-218. (Available in translation as NACA TM 1284, 1950.)

20. Schultz-Grunow, F.: Neues Reibungswiderstandsgesetz für glatte Platten. Luftfahrtforschung, Bd. 17, Nr. 8, Aug. 20, 1940, pp. 239-246. (Available in translation as NACA TM 986, 1941.)

21. Dhawan, Satish, and Roshko, Anatol: A Flexible Nozzle for a Small Supersonic Wind Tunnel. Jour. Aero. Sci., vol. 18, no. 4, April 1951, pp. 253-258.

22. Emmons, H. W.: The Laminar-Turbulent Transition in a Boundary Layer - Part I. Jour. Aero. Sci., vol. 18, no. 7, July 1951, pp. 490-498.

23. Emmons, H. W., and Bryson, A. E.: The Laminar-Turbulent Transition in a Boundary Layer - Part II. (To be published in Proc. First U. S. Nat. Cong. Appl. Mech., June 1951, Chicago, Ill.)

24. Liepmann, H. W., Roshko, A., and Dhawan, S.: On Reflection of Shock Waves from Boundary Layers. NACA TN 2334, 1951.

25. Dryden, Hugh L.: Air Flow in the Boundary Layer near a Plate. NACA Rep. 562, 1936.

26. Liepmann, Hans W.: Investigations on Laminar Boundary-Layer Stability and Transition on Curved Boundaries. NACA ACR 3H30, 1943.

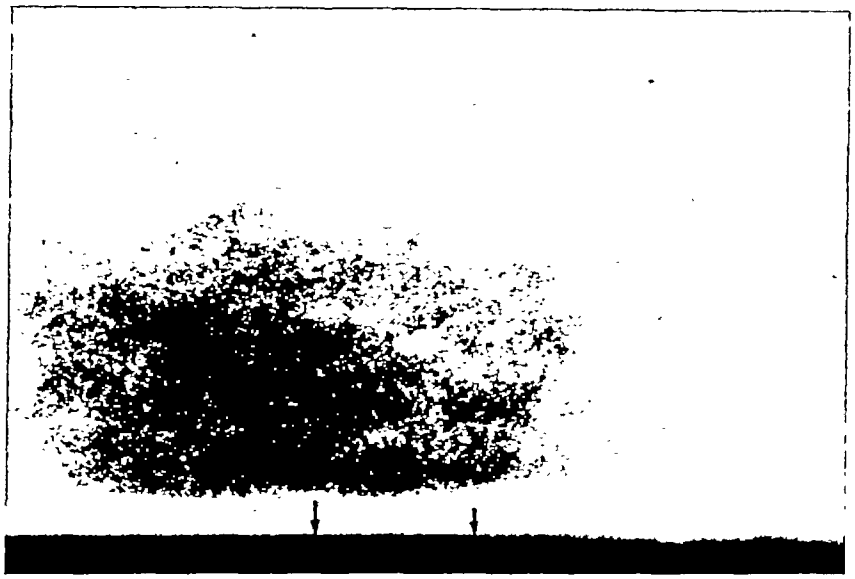

Figure 1.- Effect of slots in plate. Laminar boundary layer; $M \approx 1.4$; flow from left to right; arrows indicate position of slots.

Figure 2.- Effect of slots in plate. Turbulent boundary layer; $M \approx 1.4$; flow from left to right; arrows indicate position of slots.

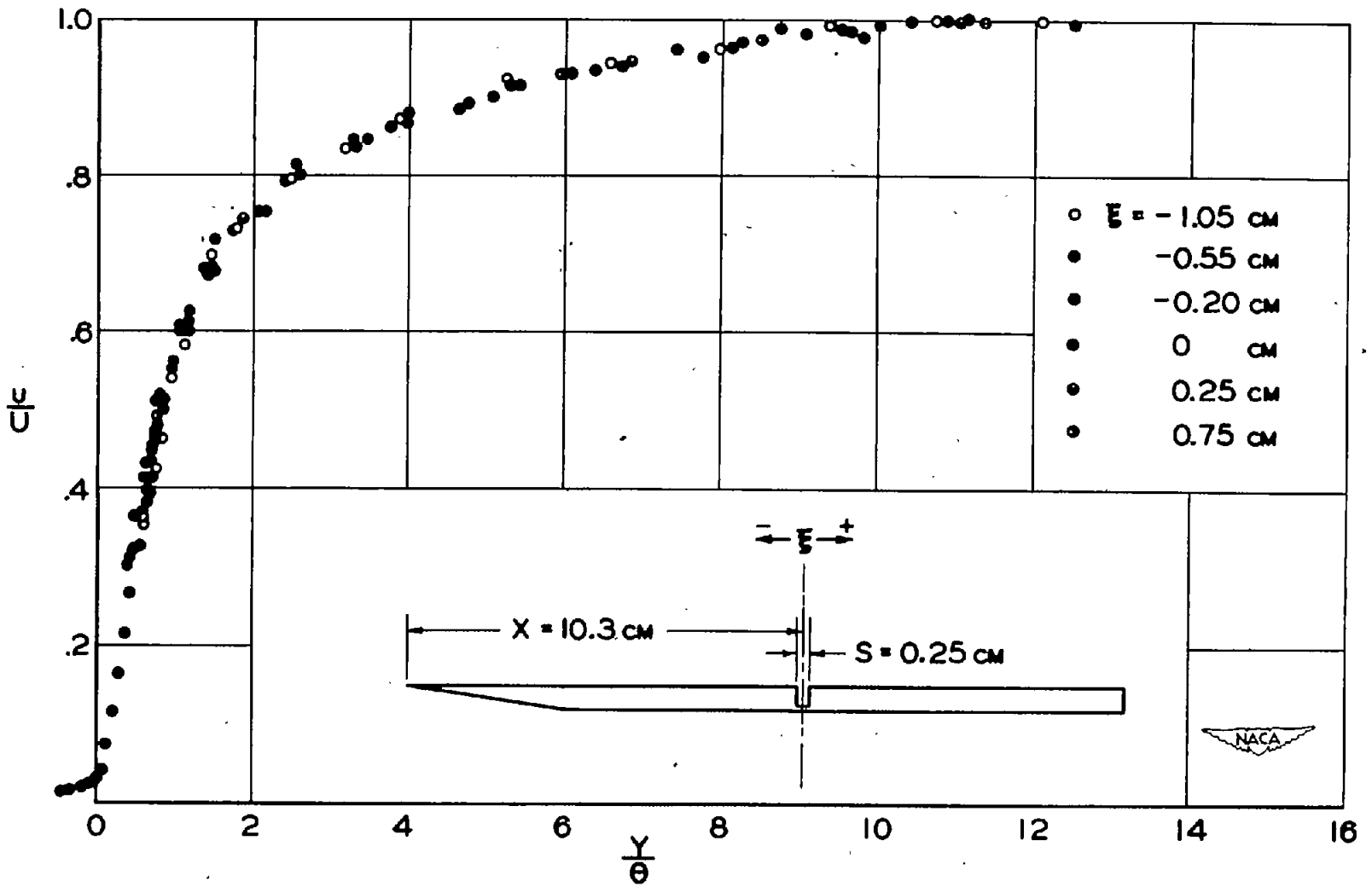

Figure 3.- Velocity profiles on flat plate with turbulent boundary layer and slot. $R_x \approx 4 \times 10^4$; $R_s \approx 1000$.

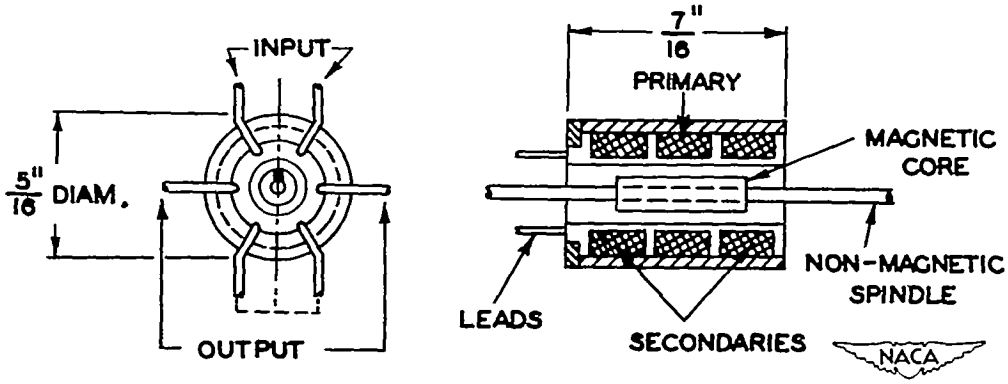

Figure 4.- Differential transformer.

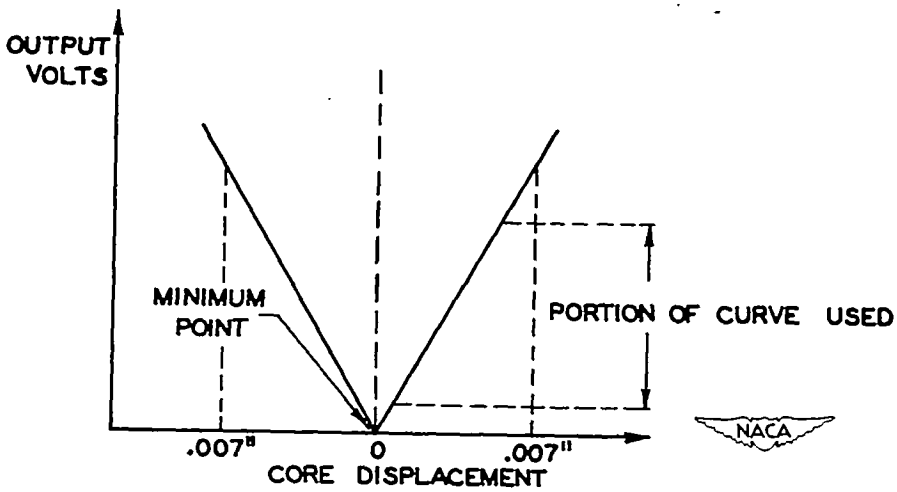

Figure 5.- Sketch of output characteristics of differential transformer.

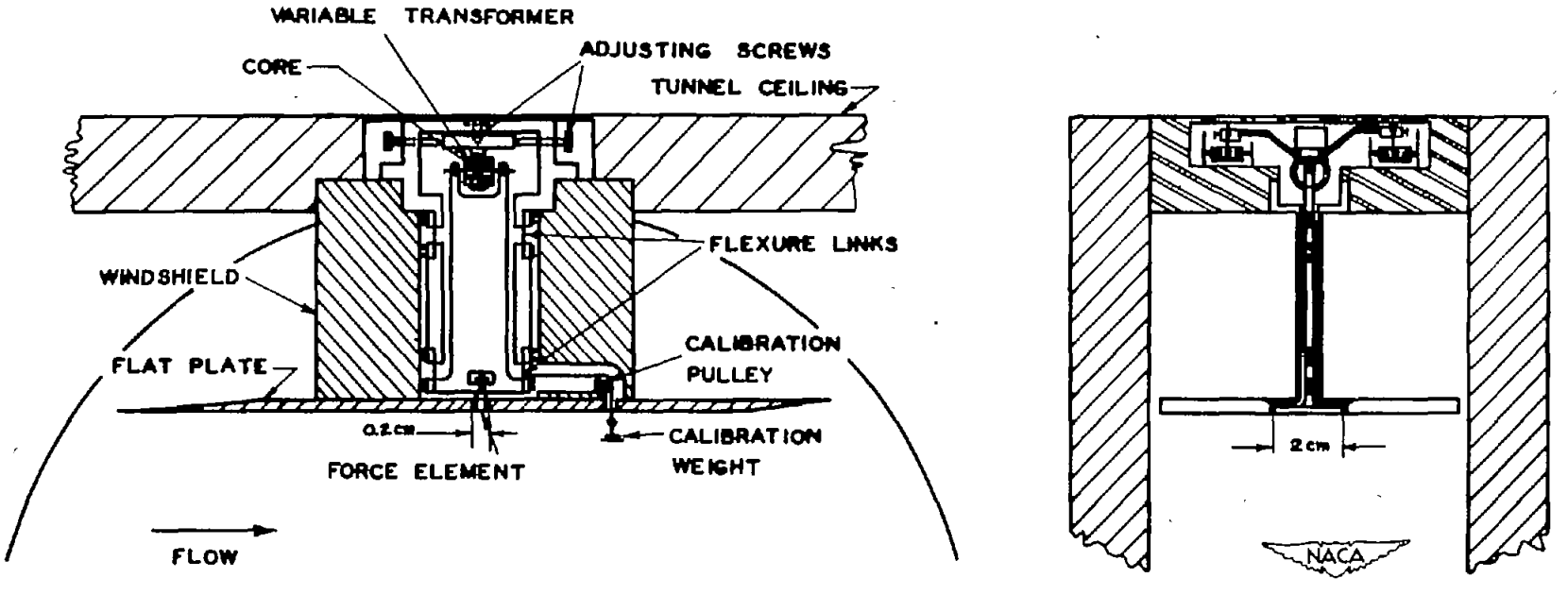

Figure 6.- Sketch of instrument for direct measurement of skin friction.

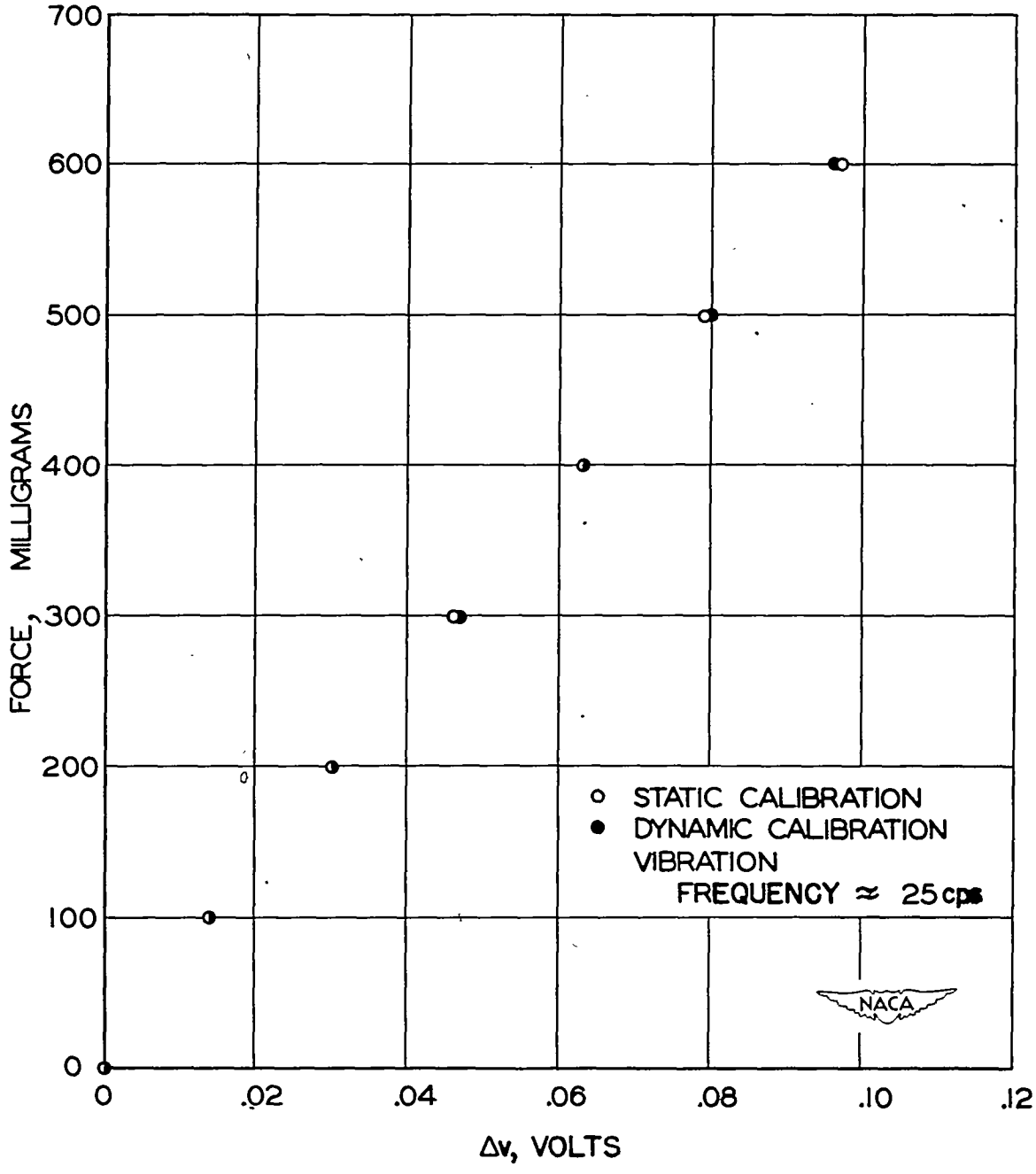

Figure 7.- Effect of vibrations on calibration of skin-friction instrument

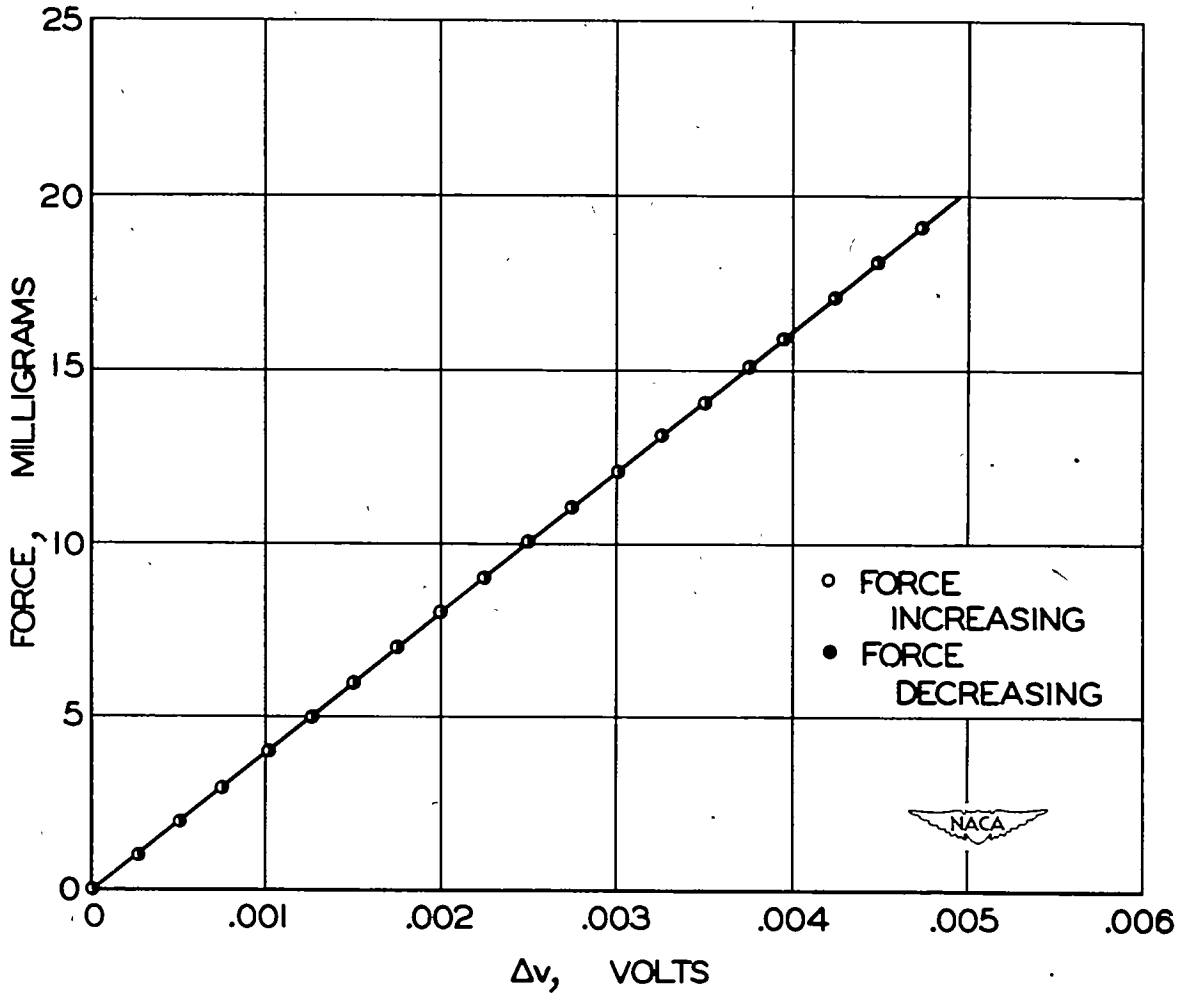

Figure 8.- Calibration of skin-friction instrument. Input, 5 volts at 20 kilocycles; 0.0005- by 1/4-inch links; τ_o, 39.25 × Δv dynes per square centimeter.

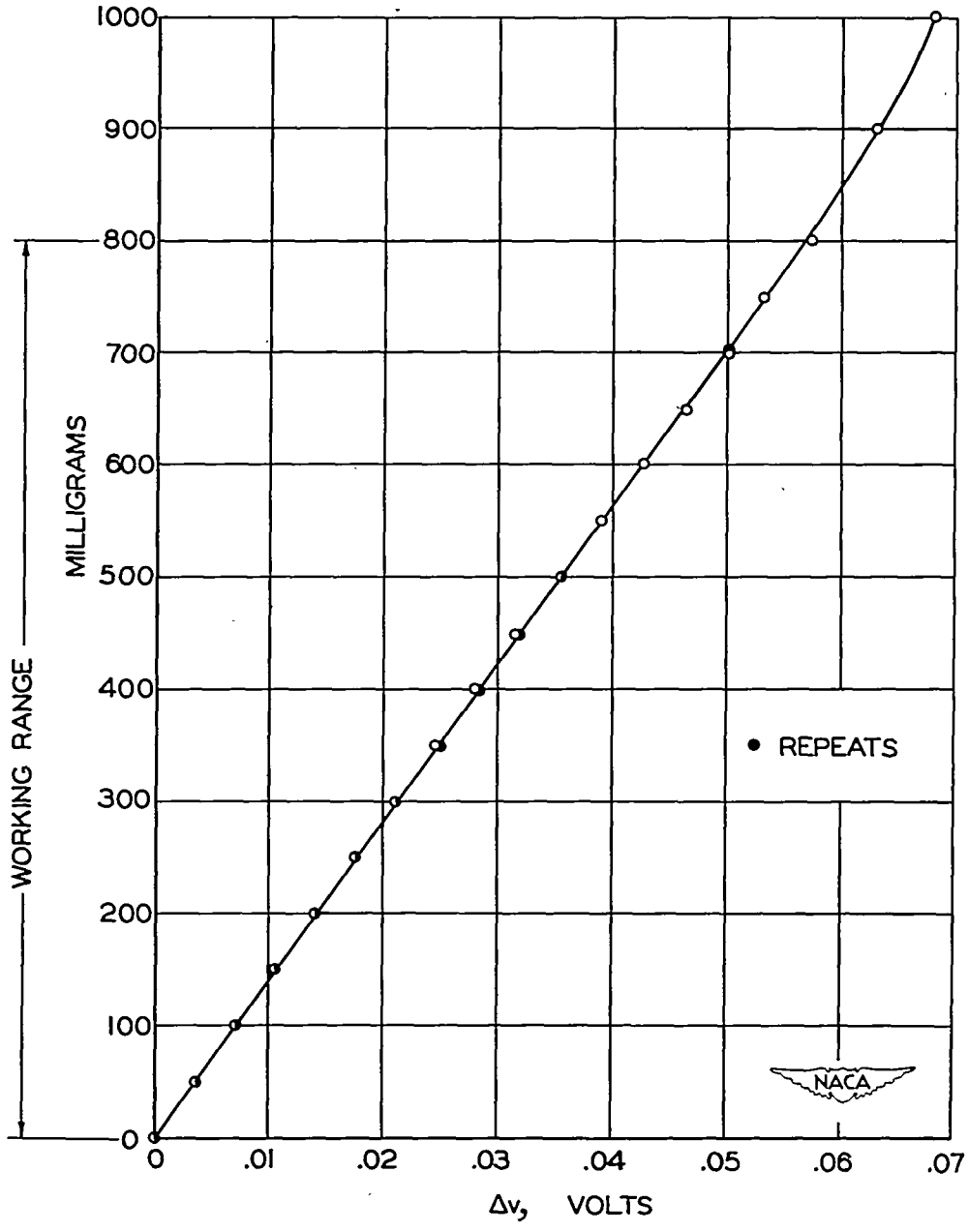

Figure 9.- Calibration curve of skin-friction instrument. 0.01- by 1/16-inch steel links; τ_o, $38.3 \times 10^3 \times \Delta v$ dynes per square centimeter.

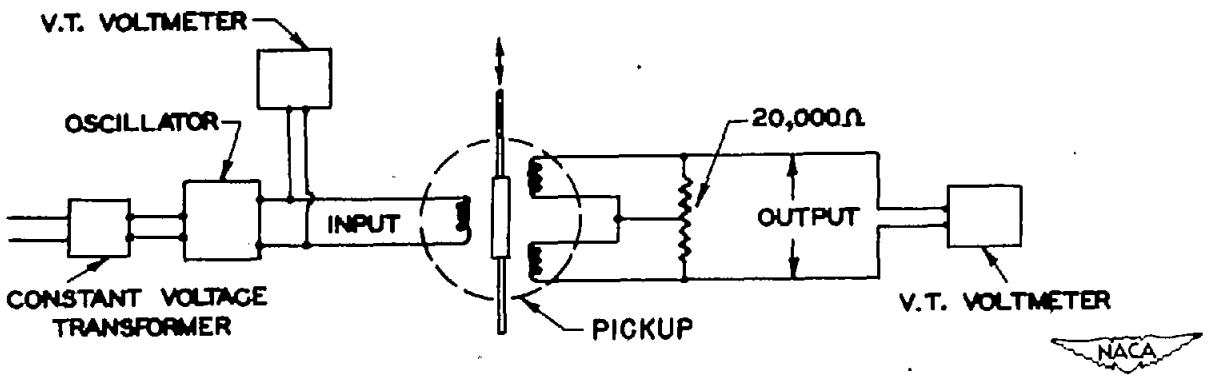

Figure 10.- Circuit used for skin-friction instrument.

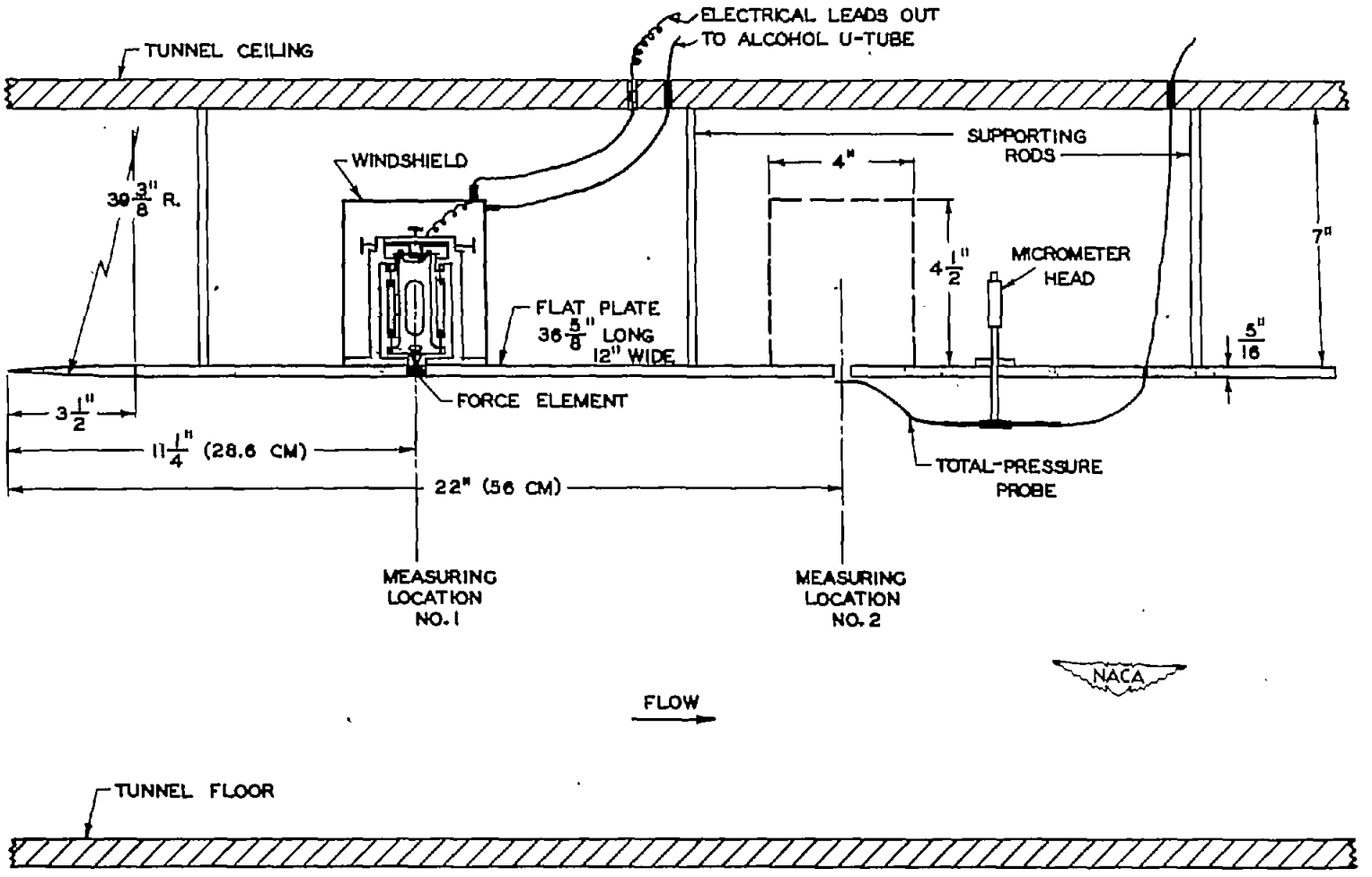

Figure 11.- Sketch of flat-plate installation in GALCIT $2\frac{1}{2}$- by $2\frac{1}{2}$- foot correlation tunnel.

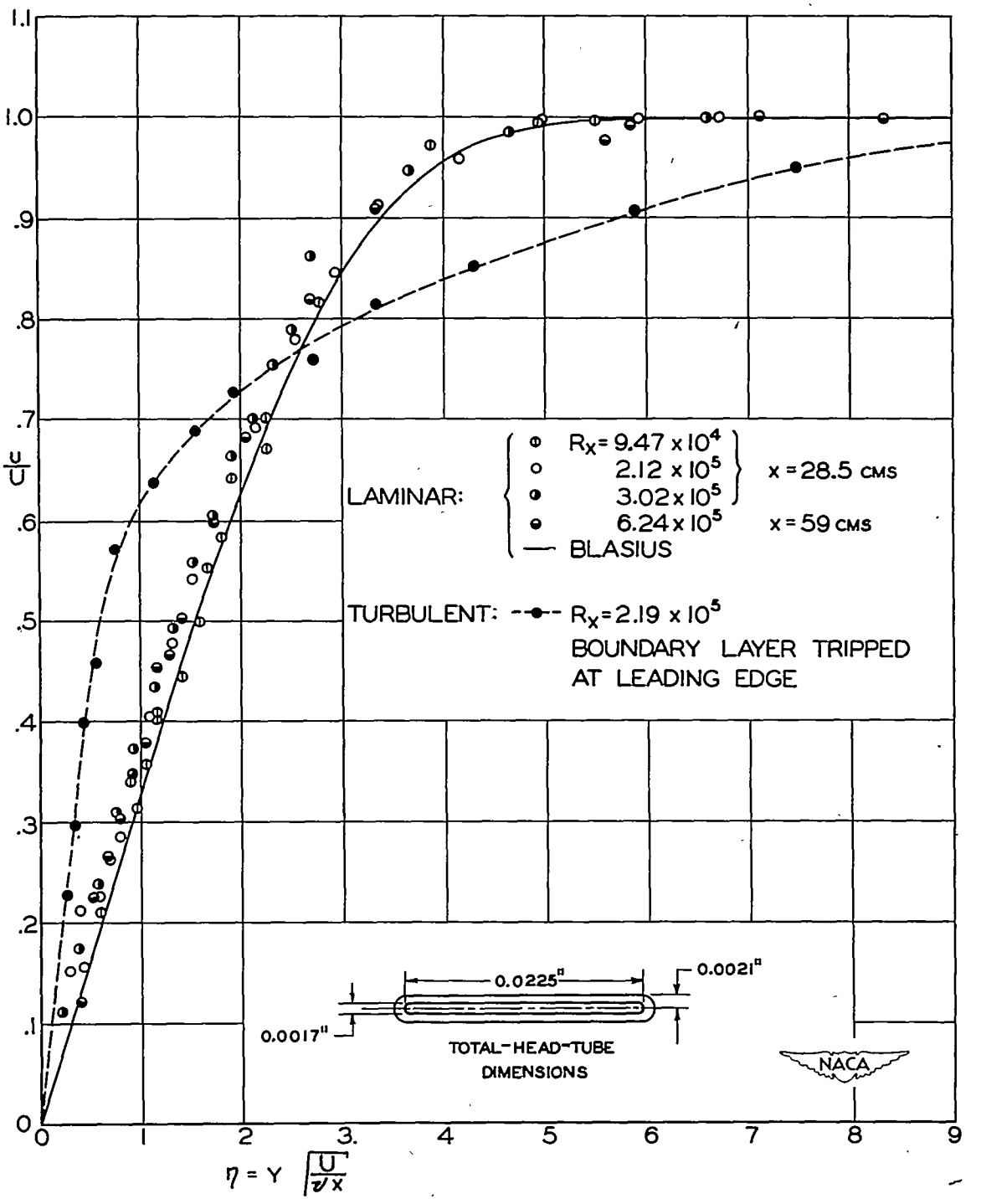

Figure 12.- Boundary-layer profiles on flat plate. Incompressible flow.

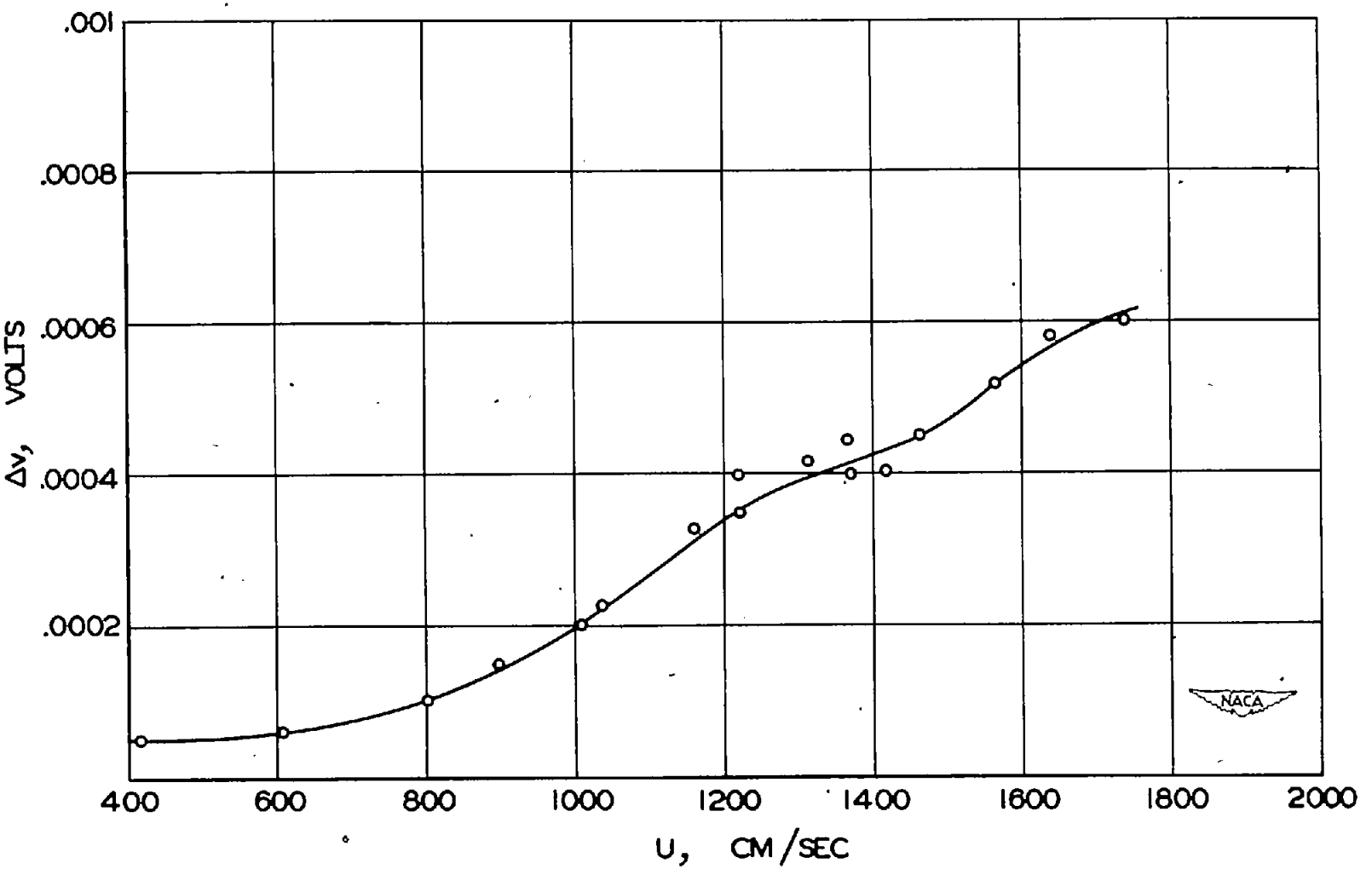

Figure 13.- Correction for deflection of flat plate.

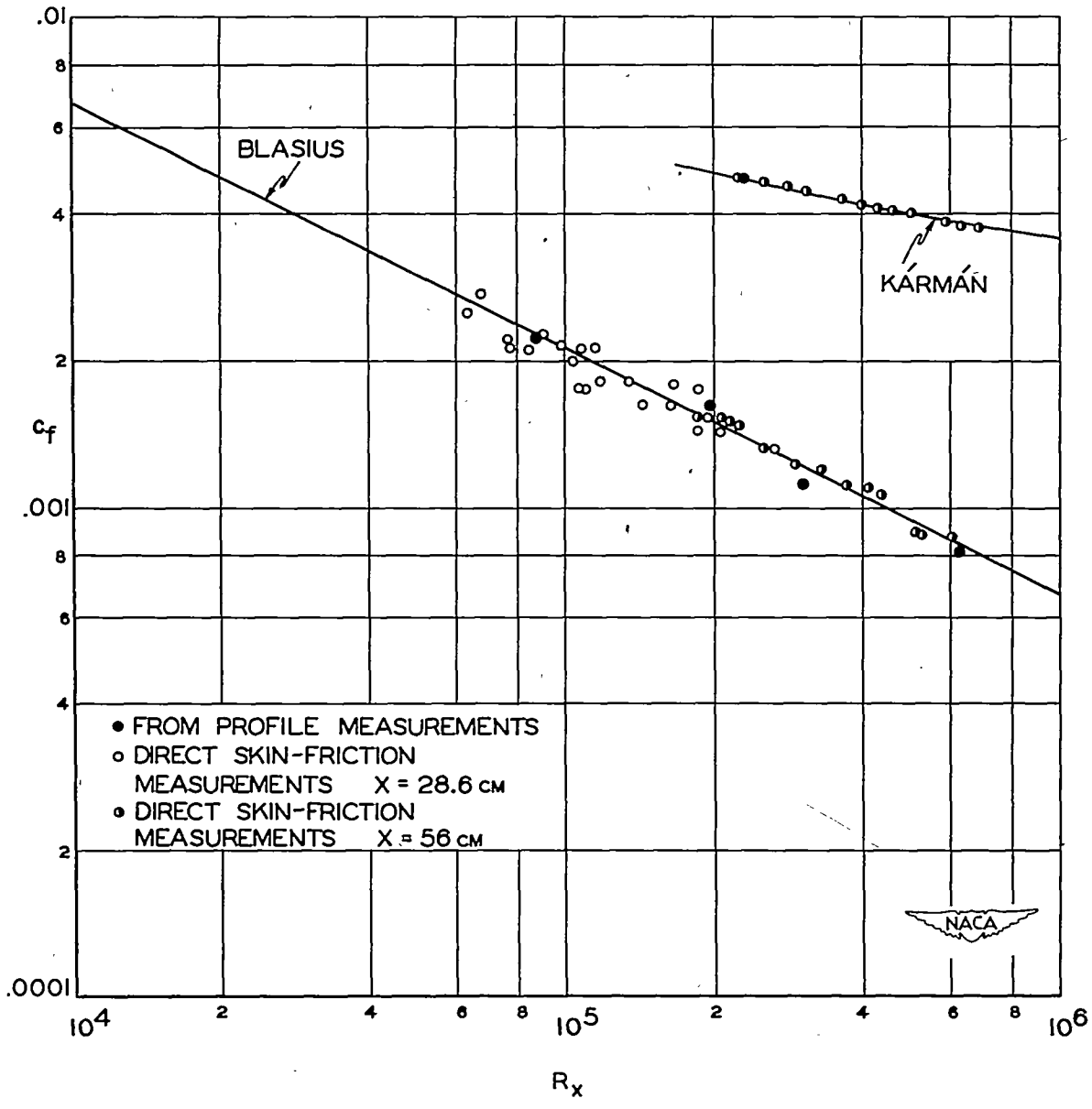

Figure 14.- Local skin friction in incompressible flow. M = 0.

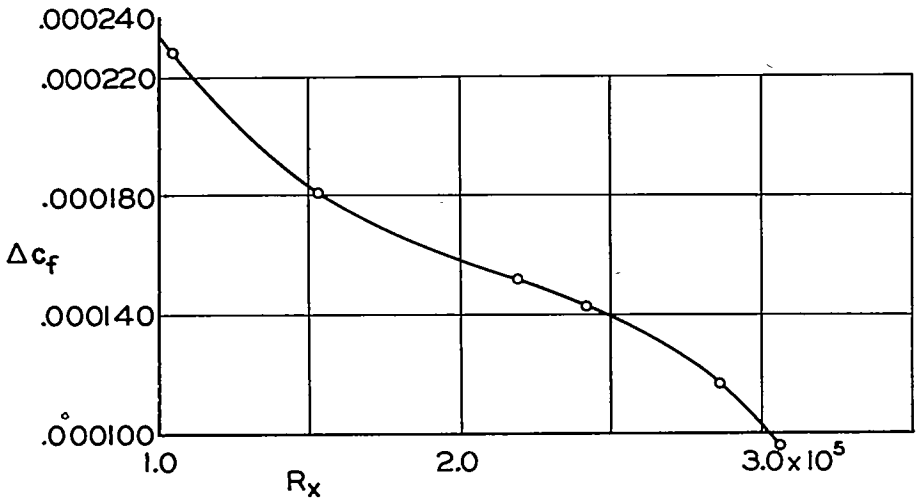

(a) Correction for pressure gradient; laminar boundary layer.

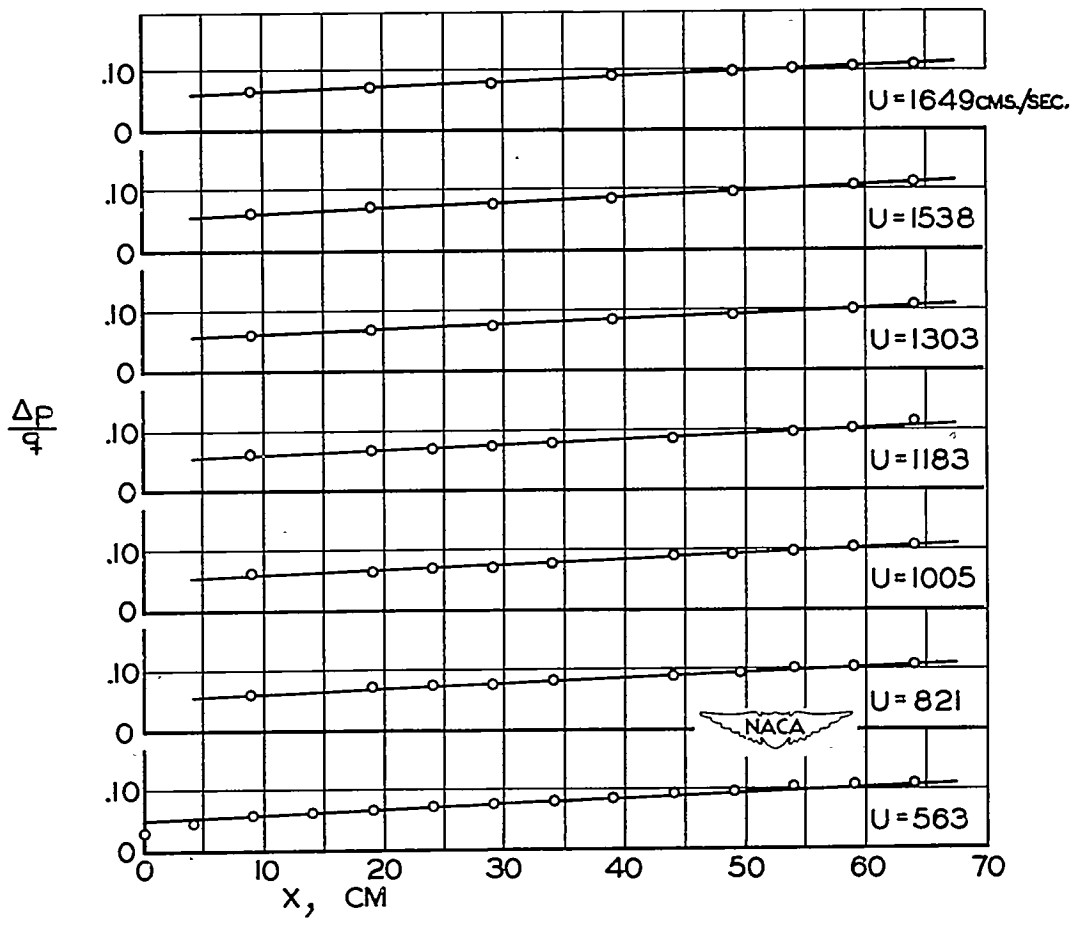

(b) Pressure distribution on flat plate; incompressible flow.

Figure 15.- Pressure-gradients measurements.

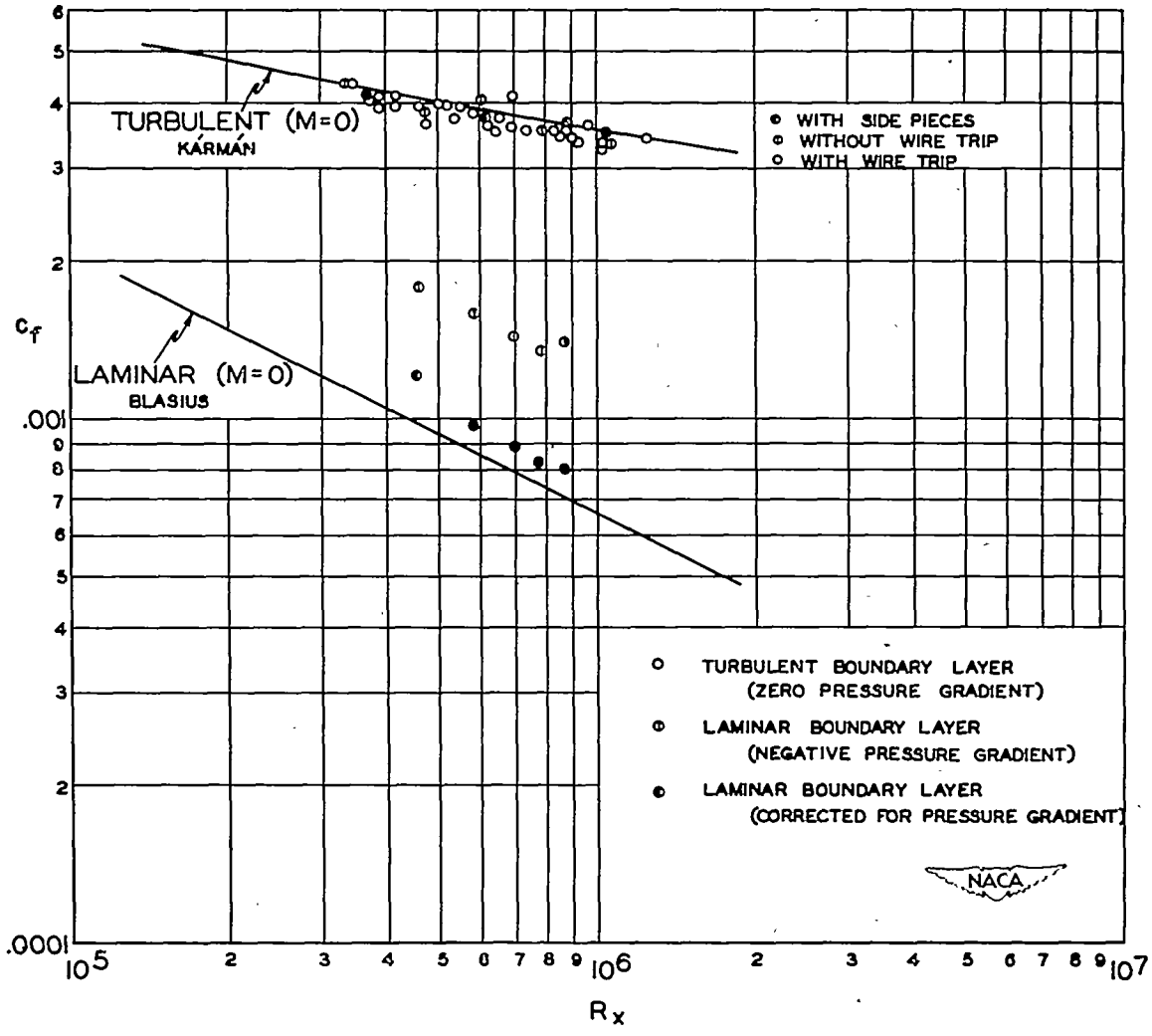

Figure 16.- Local skin friction on flat plate in subsonic flow. Mach number range, M = 0.2 to 0.8.

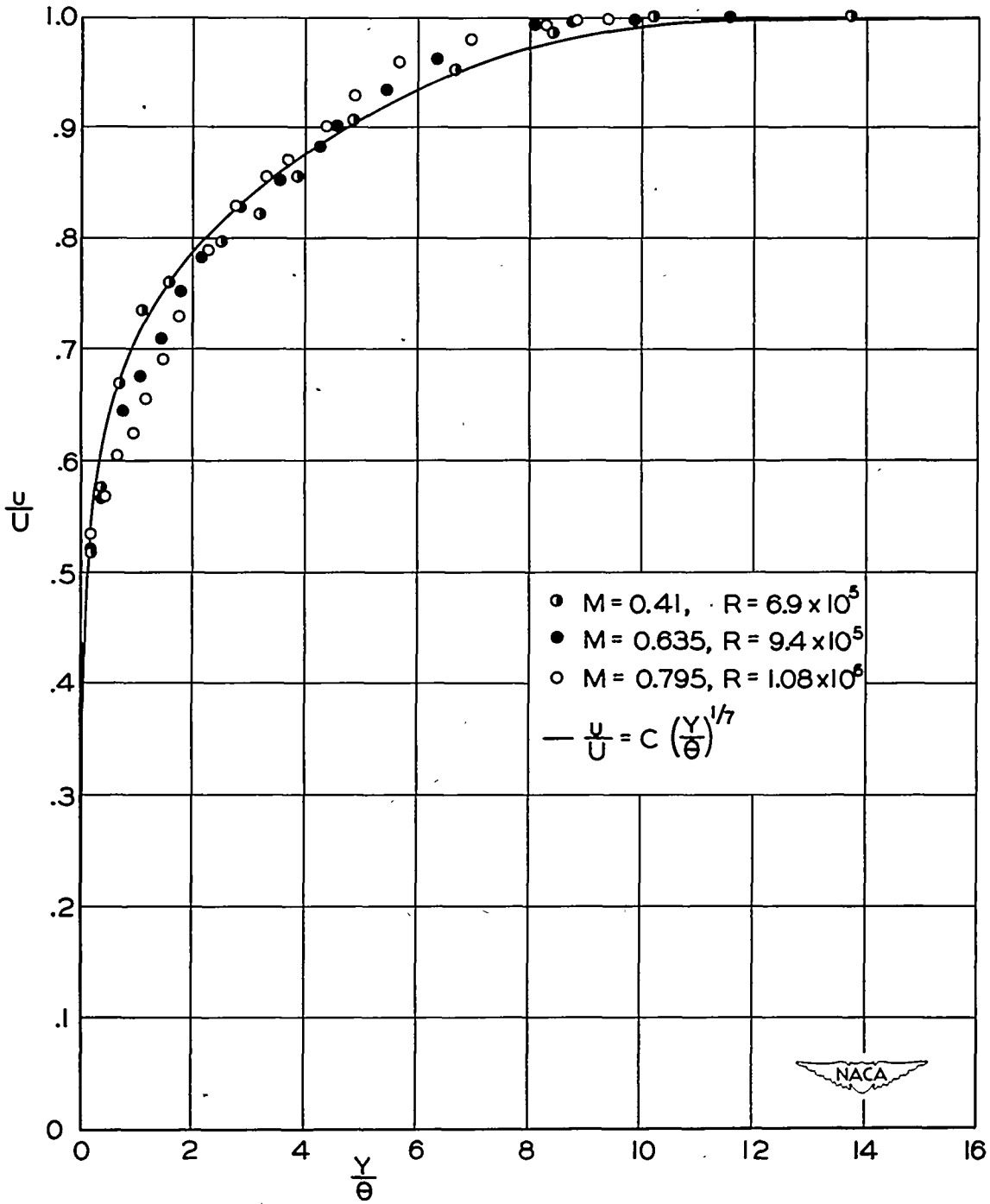

Figure 17.- Turbulent-boundary-layer velocity profiles on flat plates.

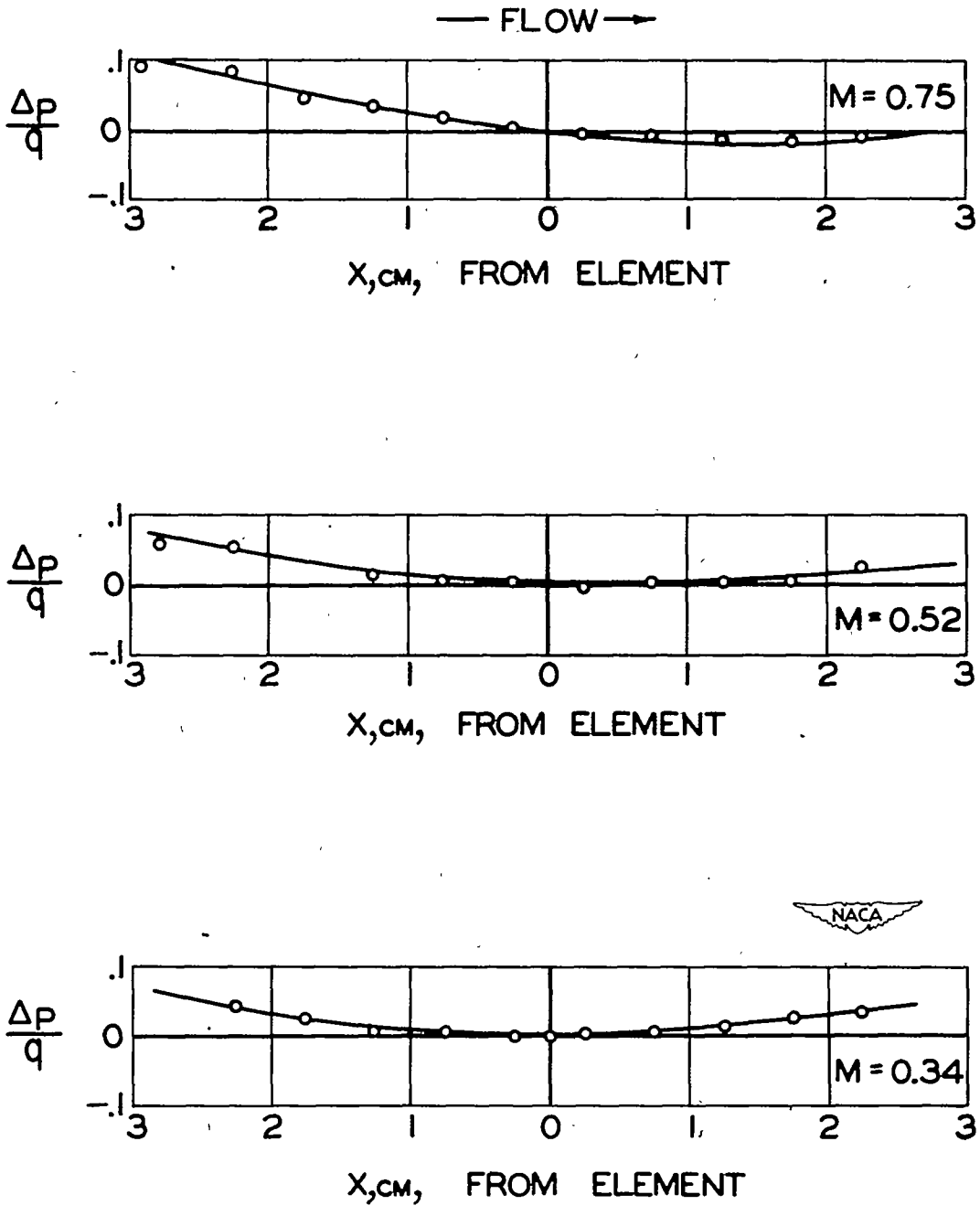

Figure 18.- Representative pressure distributions on flat plate with turbulent layer. Supersonic flow.

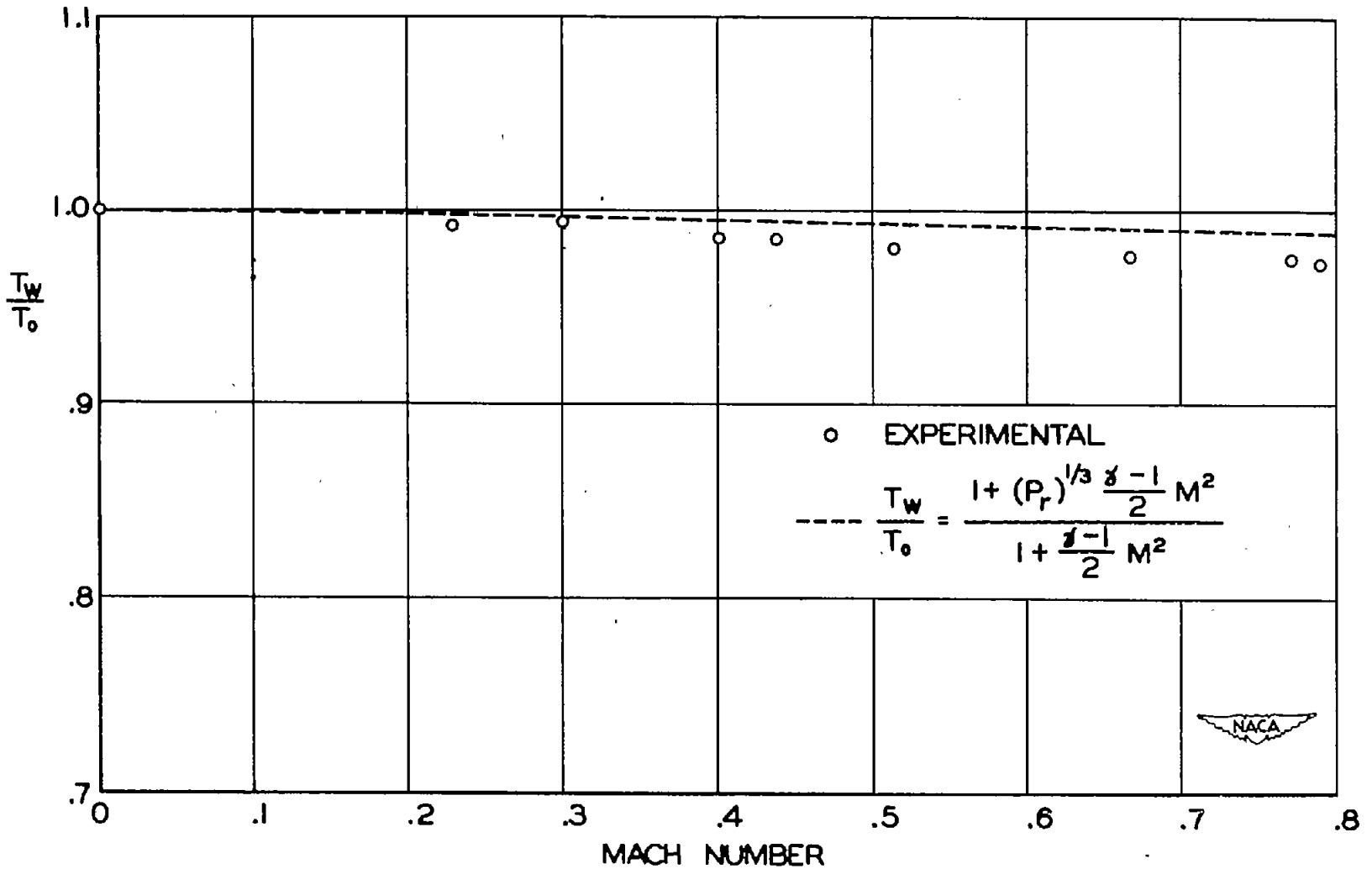

Figure 19.- Temperature recovery on flat plate with turbulent boundary layer. Zero heat transfer.

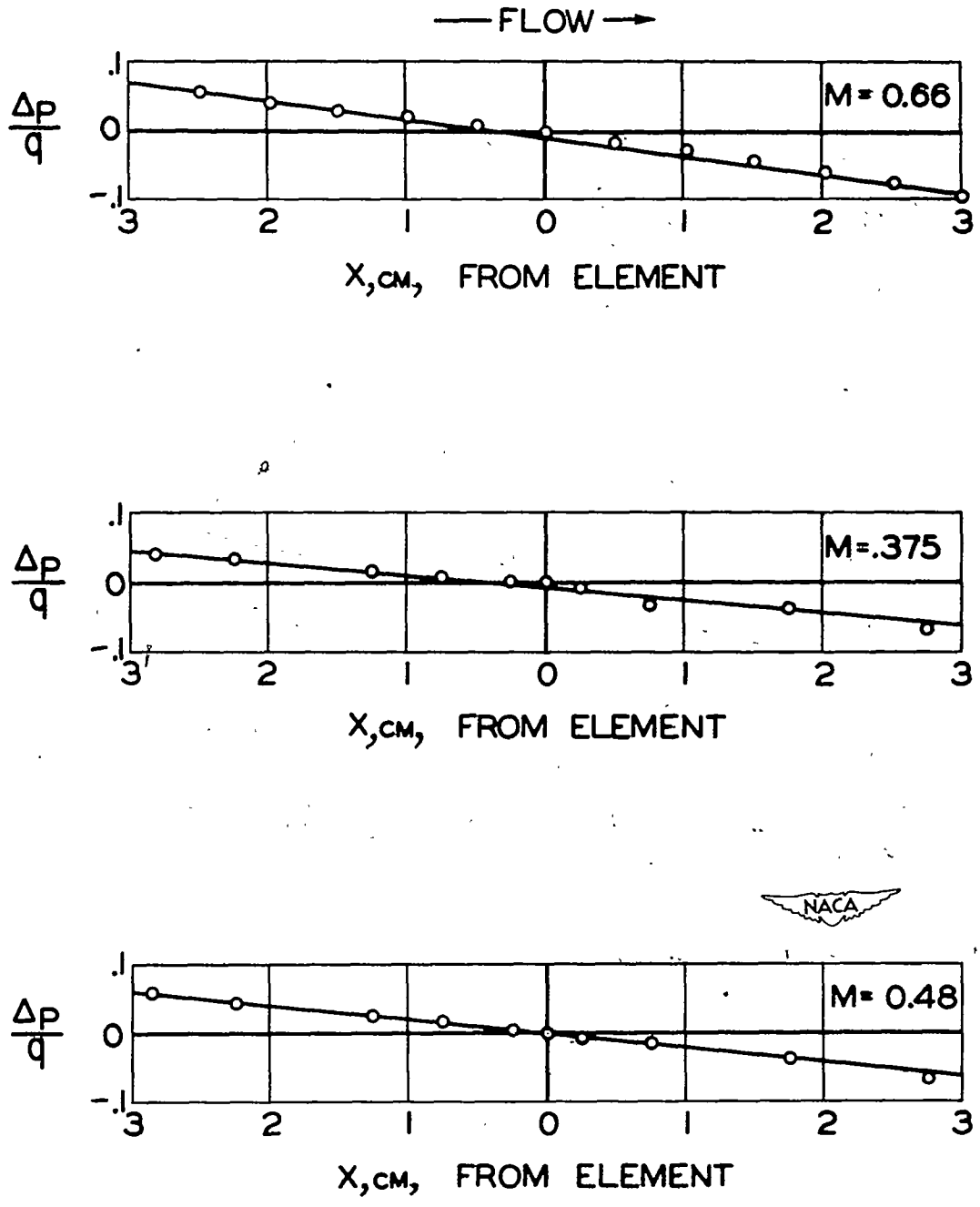

Figure 20.- Representative pressure distributions on flat plate with laminar boundary layer. Subsonic flow.

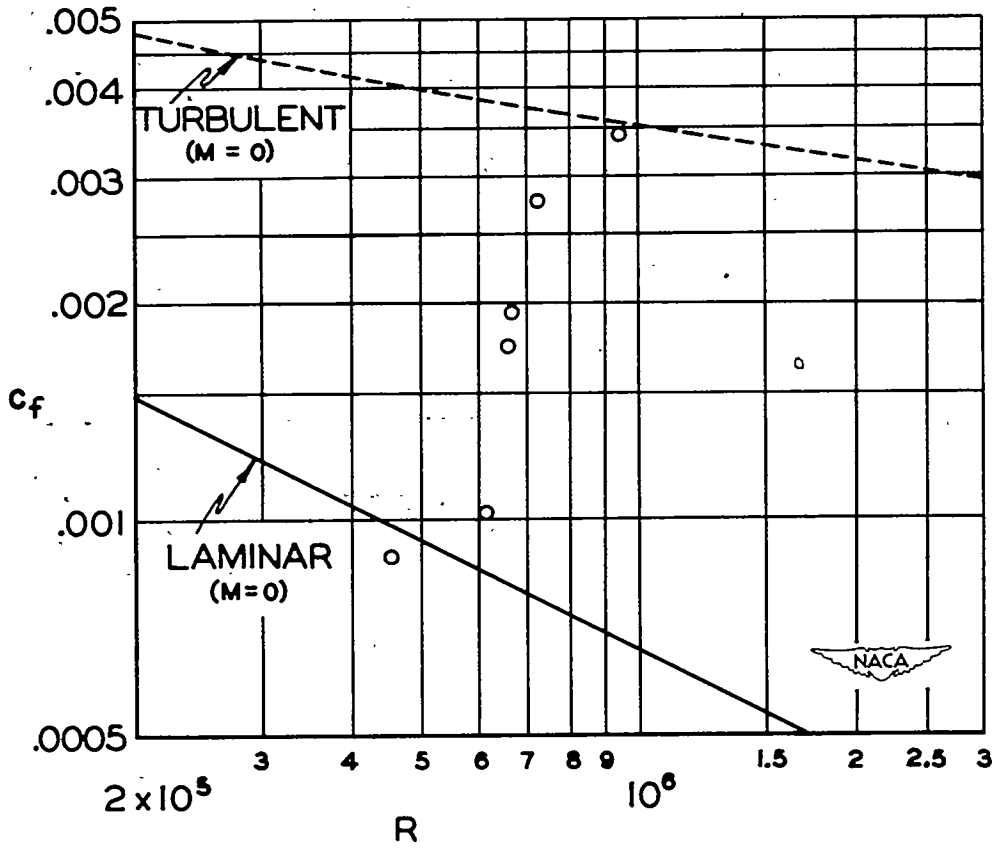

Figure 21.- Transition on flat plate. $M \approx 0.24$ to $M \approx 0.6$.

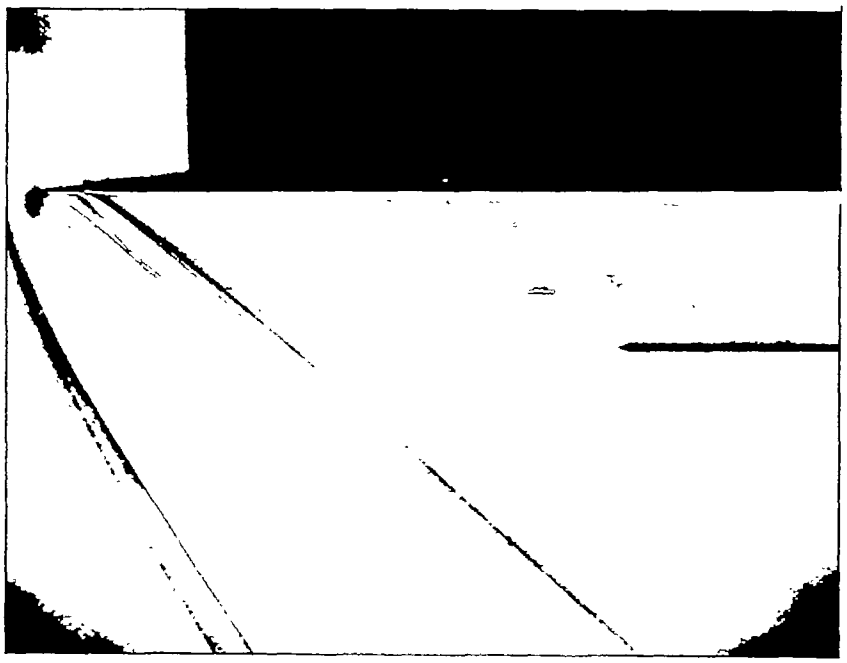

Figure 22.- Schlieren photograph of flow past flat plate.

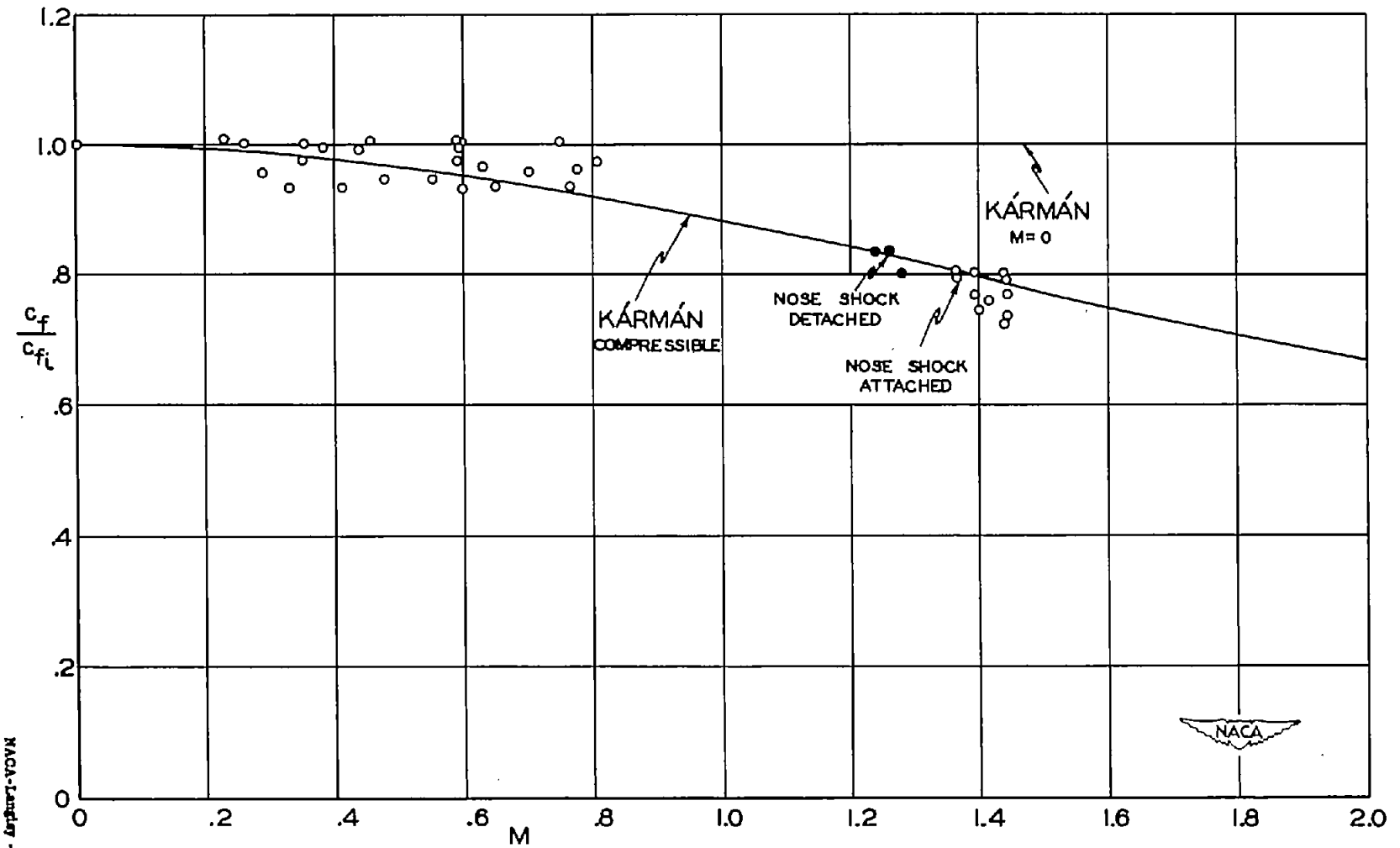

Figure 23.- Effect of compressibility on local skin friction on flat plate. Turbulent boundary layer; Reynolds number, $R \approx 10^6$.

NACA-Langley - 1-14-48 - 1000