3983

NACA TN 2604

TECH LIBRARY KAFB, NM
0065710

NATIONAL ADVISORY COMMITTEE FOR AERONAUTICS

TECHNICAL NOTE 2604

A GENERAL THEORY OF THREE-DIMENSIONAL FLOW IN SUBSONIC AND SUPERSONIC TURBOMACHINES OF AXIAL-, RADIAL-, AND MIXED-FLOW TYPES

By Chung-Hua Wu

Lewis Flight Propulsion Laboratory
Cleveland, Ohio

Washington
January 1952

AFMDC
TECHNICAL LIBRARY
AFL 2811

TECH LIBRARY KAFB, NM

0065710

TABLE OF CONTENTS

Page

SUMMARY 1

INTRODUCTION 1

SYMBOLS 4

BASIC AEROTHERMODYNAMIC RELATIONS 8

POTENTIAL EQUATION FOR THREE-DIMENSIONAL FLOW THROUGH ROTATING BLADE ROW 14

FOLLOWING FLUID FLOW ON RELATIVE STREAM SURFACES 16
- S_1 Stream Surface of First Kind 16
- S_2 Stream Surface of Second Kind 17
- Relations among Relative Velocity of Fluid, Coordinates of Stream Surface, and Normal to Stream Surface 18

EQUATIONS GOVERNING FLUID FLOW ON S_1 SURFACE FOR AXIAL-FLOW AND AXIAL-DISCHARGE MIXED-FLOW TURBOMACHINES 19
- Flow along General S_1 Surface 19
  - Equations of continuity and motion 20
  - Principal equation 22
  - Procedure of solution 26
- Flow along Surface of Revolution 28
- Flow along Cylindrical Surface 30

EQUATIONS GOVERNING FLUID FLOW ON S_1 SURFACE FOR RADIAL-FLOW AND RADIAL-DISCHARGE MIXED-FLOW TURBOMACHINES 31
- Flow along General S_1 Surface 31
  - Equations of continuity and motion 32
  - Principal equation 32
- Flow along a Surface of Revolution 34
- Flow on Radial Plane 36
- Alternative Form of Equations for Flow along Surface of Revolution 37

EQUATIONS GOVERNING FLUID FLOW ON S_2 SURFACES 38
- Equations of Continuity and Motion 38
- Principal Equation for Case with $V_u r$ Given 41
- Principal Equation for Case with W_u/W_z Given 44
- Procedure of Solution 46
  - Direct problem 46
  - Inverse problem 47

Approximations Involved in Through-Flow Theory 48

CIRCUMFERENTIAL VARIATION OF FLUID PROPERTIES BY USE OF POWER SERIES 49

STEPS FOR COMPLETE SOLUTIONS OF THREE-DIMENSIONAL DIRECT AND INVERSE PROBLEMS 53
Direct Problem 53
Axial turbomachines with nontapered straight walls 53
Axial turbomachines with tapered or curved walls 54
Radial- and mixed-flow type turbomachines with curved walls . 55
Inverse Problem 55
Conditions prescribed on mean stream surface 55
Boundary conditions for mean stream surface 56
Determination of blade shape 56

GENERAL METHODS OF SOLVING PRINCIPAL EQUATION 58
Elliptic Case 59
Finite-difference form of principal equation 60
Boundary conditions 62
Solution of finite-difference equations 64
General table for evaluation of density from ψ-derivatives . 65
Hyperbolic Case 67
Changes of ψ-derivatives along characteristic curve 68
Changes of fluid velocity and direction along characteristic curve 70

CONCLUDING REMARKS 73

REFERENCES 73

NATIONAL ADVISORY COMMITTEE FOR AERONAUTICS

TECHNICAL NOTE 2604

A GENERAL THEORY OF THREE-DIMENSIONAL FLOW IN SUBSONIC AND SUPERSONIC TURBOMACHINES OF AXIAL-, RADIAL-, AND MIXED-FLOW TYPES

By Chung-Hua Wu

SUMMARY

A general theory of steady three-dimensional flow of a nonviscous fluid in subsonic and supersonic turbomachines having arbitrary hub and casing shapes and a finite number of blades is presented. The solution of the three-dimensional direct and inverse problem is obtained by investigating an appropriate combination of flows on relative stream surfaces whose intersections with a z-plane either upstream of or somewhere inside the blade row form a circular arc or a radial line. The equations obtained to describe the fluid flow on these stream surfaces show clearly the several approximations involved in ordinary two-dimensional treatments. They also lead to a solution of the three-dimensional problem in a mathematically two-dimensional manner through iteration. The equation of continuity is combined with the equation of motion in either the tangential or the radial direction through the use of a stream function defined on the surface, and the resulting equation is chosen as the principal equation for such flows. The character of this equation depends on the relative magnitude of the local velocity of sound and a certain combination of velocity components of the fluid. A general method to solve this equation by both hand and high-speed digital machine computations when the equation is elliptic or hyperbolic is described. The theory is applicable to both irrotational and rotational absolute flow at the inlet of the blade row and at both design and off-design operations.

INTRODUCTION

The problem of three-dimensional flow in turbomachines of axial-, radial-, and mixed-flow types is treated in references 1 to 19. Because of the enormous mathematical difficulties involved in the problem, Lorenz (reference 1) first introduced the idea of an infinite number of blades of infinitesimal thickness in order to follow the flow on a given surface.

Bauersfeld (reference 2) added to the theory the condition of integrability for the blade surface that must be satisfied in the inverse, or design, problem. The theory is further clarified and strengthened by the works of Stodola (reference 3), von Mises (reference 4), and Dreyfus (reference 5), and is the basis of many recent investigations on axial-, radial-, and mixed-flow compressors and turbines.

For incompressible flow, Ruden (reference 6) proves that the through-flow solution obtained under the assumption of an infinite number of blades gives a circumferentially average value of the fluid properties, provided the deviations of the fluid properties from their circumferential averages are small. In reference 7, Traupel points out the oscillatory nature of radial flow in a multistage turbomachine and gives solutions of the three-dimensional potential flow through inclined stationary blades and also of the rotational flow through a homogeneous stage of identical nontwisted blades for an incompressible fluid and an infinite number of blades bounded by cylindircal walls. Meyer gives a detailed treatment of three-dimensional potential flow in a stationary blade row, for an incompressible fluid and cylindrical bounding wall, in reference 8, where the solution for an infinite number of blades is extended to a finite number of blades by the vortex-and-source method of Ackeret, which is originally given for two-dimensional flow (reference 9). In reference 10, a linearized solution for an incompressible fluid and an infinite number of blades for a prescribed loading and cylindrical bounding walls is obtained by Marble, and is used later to investigate the problem of mutual interference of adjacent blade rows and off-design operations (reference 11). Siestrunck and Fabri (reference 12) also obtained a linearized solution for incompressible flow, and the method is extended to compressible flow. For general wall shapes, Spannhake (reference 13) examines the flow through diffuser and impeller by the use of bound vortices for blades. The incompressible through flow in a mixed-flow impeller is treated by Gravolos (reference 14). In reference 15, Wislicenus examines the influence on the meridional flow of the blade force and nonuniform circulation along the blade span.

For compressible flow, Reissner (reference 16) gives a blade-design method in which the extension from an infinite number of blades to a finite number of blades is accomplished by the use of a power series in the circumferential direction, and the terms in the series are determined by a comparison of the equations for an infinite number of blades and a finite number of blades. (In reference 5, Dreyfus gives a method of designing water turbines of thin blades, in which the solution for an infinite number of blades is extended to a finite number of blades by the use of a power series, the second term of which is determined from the equations of continuity and irrotational absolute flow and is explicitly given.) In reference 17 the compressible flow problems in axial turbomachines having an infinite number of blades are treated, and both the direct and inverse problems are considered. Methods for

limiting solutions for zero and infinite blade-row aspect ratios and a step-by-step method of solution, as well as a simpler method based on an approximate knowledge of the shape of the streamline, for a finite blade-row aspect ratio are given. Unaware of the work of Traupel at the time, the authors of reference 17 also emphasized the oscillatory nature of radial flow in multistage machines and suggested the use of a simple sinusoidal form of the streamline as a first approximate solution. Their methods are derived for compressible flow, however, and are also extended to the case where both the hub and casing walls or either is tapered. Reference 18 gives a general through-flow theory for both direct and inverse problems and for subsonic or supersonic flow in turbomachines having arbitrary hub and casing shapes. The supersonic through flow in rotating impellers having a prescribed flow along the casing and prescribed blade shapes is treated in reference 19.

A general theory of three-dimensional flow in subsonic and supersonic turbomachines of axial-, radial-, and mixed-flow types for a finite number of thick blades of finite thickness has been developed at the NACA Lewis laboratory and is presented herein. Both the direct and inverse problems are considered. The theory is applicable to either irrotational or rotational absolute flow at the inlet of a blade row and to both design and off-design operations.

In the section BASIC AEROTHERMODYNAMIC RELATIONS, the motion and energy equations for the unsteady flow of a nonviscous compressible fluid in a rotating blade row are expressed in terms of the velocity components and of two basic thermodynamic properties of the fluid, namely, entropy and a modified total enthalpy for flow in rotating blade rows with change in radial distance from the machine axis. Estimated entropy changes due to shock waves (in the case of supersonic flow), heat transfer (in the case of a cooled turbine), or viscous effect can be easily accomodated in the calculation. The equations obtained show clearly the condition under which the flow through blade rows can be treated on the basis of irrotational absolute flow.

In the following section, a general potential equation is obtained for steady three-dimensional compressible flow through rotating or stationary blade rows when the absolute flow can be taken as irrotational. The methods of solution for both subsonic and supersonic flows are briefly discussed.

A simpler method of solving the three-dimensional irrotational (absolute) flow, which is also applicable to rotational (absolute) flow, is obtained by considering fluid flows on a number of relative stream surfaces whose intersection with a z-plane either upstream of or somewhere in the blade row form a circular arc or a radial line. Equations governing the flow on these surfaces are obtained in the next four sections. Through the use of a stream function defined on the stream

surface, the equations of continuity and motion for fluid flow on these surfaces are combined into one principal equation. The character of the principal equation is dependent on the relative magnitude of the local velocity of sound and a certain combination of velocity components.

The process involved in solving the direct and inverse problems by this approach is described in the section STEPS FOR COMPLETE SOLUTIONS OF THREE-DIMENSIONAL DIRECT AND INVERSE PROBLEMS. In the inverse problem, besides the blade-thickness distribution determined by blade strength and other considerations, either the tangential velocity, a relation between the tangential and axial velocity, or one other relation is prescribed on a mean stream surface about midway between two blades. The last section gives a general method of solution of the principal equation when it is elliptic or hyperbolic.

SYMBOLS

The following symbols are used in this report:

a	velocity of sound
B,b	integrating factor for continuity equation for S_2 and S_1 surfaces, respectively
${}^{m}_{n}B^{i}_{j}$	differentiation coefficient used to multiply function value at point j to give the mth derivative at point i based on n^{th} degree polynomial
C,c	nonzero term on right-hand side of continuity equation for S_2 and S_1 surfaces, respectively
c_p,c_v	specific heat of gas at constant pressure and volume, respectively
$\frac{D}{Dt}$	differentiation with respect to time following relative motion of fluid particle
$D^m q$	m^{th} derivative of q
$\mathbf{F},\mathbf{f}$	vectors having the unit of force per unit mass of fluid
G,g	given function of W_u/W_z on S_2
H	total enthalpy per unit mass of fluid, $h + \frac{1}{2}V^2$
h	static enthalpy per unit mass of fluid, $u + p/\rho$

I	modified total enthalpy for flow in rotating blade row with change in radial distance from machine axis, $h + \frac{1}{2}W^2 - \frac{1}{2}\omega^2 r^2$ or $H - \omega(V_u r)$
J,K,L,M,N	coefficients of first- and second-order derivatives in the principal equation
k	thermal conductivity
L	distance along streamline
l,φ	orthogonal coordinates on surface of revolution
M	mass flow between mean stream surface and one surface of blade
N	number of blades
$\mathbf{n}$	unit vector normal to relative stream surface S
p	static pressure
Q	heat added to fluid particle along its path per unit mass per unit time
q	any quantity on relative stream surface S
R	gas constant
${}^{m}_{n}R^{i}$	remainder term of mth derivative at point i obtained by using n^{th} degree polynomial
$\mathbf{r}$	radius vector
S_1	relative stream surface passing through fluid particles lying on a circular arc upstream of or midway in blade row
S_2	relative stream surface passing through fluid particles lying on a radial or curved line upstream of or midway in blade row
s	entropy per unit mass
s^*	s/R
T	static temperature

t	time
$\mathbf{U}$	velocity vector of blade element at radius r
u	interval energy per unit mass
$\mathbf{V}$	absolute velocity of fluid
$\mathbf{W}$	velocity of fluid relative to blade, $\mathbf{V} - \mathbf{U}$
w	$\sqrt{W_\eta^2 + W_\zeta^2}$
x,y	independent variables
z	distance along turbomachine axis
α	$\arctan \frac{1}{r} \frac{W_u}{W_z}$
γ	ratio of specific heats
$\bar{\gamma}$	average value of γ for the temperature range involved
δ	grid spacing
ϵ	equal to 1 and r for S_1 and S_2 surfaces, respectively
ζ	independent variable z or r for S_1 surface and z for S_2 surface
η	independent variable φ and r for S_1 and S_2 surfaces, respectively
θ	angular distance of fluid particle measured with respect to stationary radial line
Λ	slope of characteristic curves, $\upsilon \frac{d\eta}{d\zeta}$
λ	$\tan \sigma$
μ	$\arcsin \frac{a}{w}$
υ	equal to r and 1 for S_1 and S_2 surfaces, respectively
$\boldsymbol{\xi}$	absolute vorticity, $\nabla \times \mathbf{V}$
ρ	fluid density

Σ generalized variable used for general density table

σ angle between tangent of streamline or boundary wall in the meridional plane and axial direction

τ radial, axial, or angular thickness of stream sheet

Φ velocity potential

ϕ generalized variable used for general density table

φ angular distance of fluid particle measured with respect to radial line on rotating blade

χ angle between w and axial direction

Ψ,ψ stream functions defined on relative stream surfaces S_2 and S_1, respectively

ω angular velocity of blade

Subscripts:

c casing

e exit

h hub

i inlet

l meridional component

m mean stream surface

o lower limit of integration

r,u,z radial, circumferential, and axial components

s isentropic

T total state

η,ζ components in η- and ζ-direction, respectively

1 on S_1, or in front of rotor

2 on S_2, or behind rotor

Superscripts:

a,b, . . . k refer to points a,b, . . . k, respectively

BASIC AEROTHERMODYNAMIC RELATIONS[1]

The three-dimensional flow of a nonviscous, compressible fluid through a turbomachine is governed by the following set of basic laws of aerothermodynamics. From the principle of conservation of matter, the equation of continuity is

$$\frac{\partial \rho}{\partial t} + \nabla \cdot (\rho \mathbf{W}) = 0 \tag{1}$$

or

$$\nabla \cdot \mathbf{W} + \frac{D \ln \rho}{Dt} = 0 \tag{1a}$$

For a blade rotating at a constant angular velocity ω about the z-axis, Newton's second law of motion gives

$$\frac{D\mathbf{W}}{Dt} - \omega^2 \mathbf{r} + 2\omega \times \mathbf{W} = -\frac{1}{\rho}\nabla p \tag{2}$$

Because the boundary walls are surfaces of revolution and the relative flow can be approximated as being steady in many cases, it is convenient to use a relative cylindrical coordinate system r, φ, and z with φ measured with respect to the rotating blade (see fig. 1). By use of

$$\frac{D\mathbf{W}}{Dt} = \frac{\partial \mathbf{W}}{\partial t} + (\mathbf{W} \cdot \nabla)\,\mathbf{W} = \frac{\partial \mathbf{W}}{\partial t} + \frac{1}{2}\nabla W^2 - \mathbf{W} \times (\nabla \times \mathbf{W})$$

the scalar forms of the equation of motion (2) in the axial, circumferential, and radial directions can be expressed as

$$\frac{\partial W_r}{\partial t} + W_r \frac{\partial W_r}{\partial r} + \frac{W_u}{r}\frac{\partial W_r}{\partial \varphi} + W_z \frac{\partial W_r}{\partial z} - \frac{W_u^2}{r} - \omega^2 r - 2\omega W_u = -\frac{1}{\rho}\frac{\partial p}{\partial r} \tag{2a}$$

$$\frac{\partial W_u}{\partial t} + W_r \frac{\partial W_u}{\partial r} + \frac{W_u}{r}\frac{\partial W_u}{\partial \varphi} + W_z \frac{\partial W_u}{\partial z} + \frac{W_r W_u}{r} + 2\omega W_r = -\frac{1}{\rho r}\frac{\partial p}{\partial \varphi} \tag{2b}$$

$$\frac{\partial W_z}{\partial t} + W_r \frac{\partial W_z}{\partial r} + \frac{W_u}{r}\frac{\partial W_z}{\partial \varphi} + W_z \frac{\partial W_z}{\partial z} = -\frac{1}{\rho}\frac{\partial p}{\partial z} \tag{2c}$$

[1]Some of the relations given in this section have been given in reference 18. They are repeated here for completeness and easy reference for the following developments.

The first law of thermodynamics may be written

$$\frac{Du}{Dt} + p\,\frac{D(\rho^{-1})}{Dt} = Q \tag{3}$$

where u is related to the temperature T by

$$du = c_v\,dT \tag{4}$$

and Q is given by the following equation if only conduction is considered:

$$Q = \rho^{-1}\,\nabla\cdot(k\nabla T) \tag{5}$$

For the ranges of temperature and pressure encountered in ordinary turbomachines, p, ρ, and T of the gas are accurately related by the following equation of state:

$$p = R\,\rho T \tag{6}$$

Although the flow of the gas through the turbomachine is completely defined by the preceding equations together with the known variations of c_v and k with temperature and the given boundary and initial conditions, it is found more convenient in references 17 and 18 to express the state of the gas in terms of the entropy and the total enthalpy or a quantity I of the gas, besides its velocity components. These quantities are defined as follows:

$$T\,ds = du + p\,d(\rho^{-1}) \tag{7}$$

$$H = h + \frac{1}{2}V^2 \tag{8}$$

$$I = h + \frac{1}{2}W^2 - \frac{1}{2}U^2 = H - \omega(V_u r) \tag{9}$$

and

$$h = u + p\rho^{-1} \tag{10}$$

From equations (10), (4), and (6) is obtained

$$dh = (c_v + R)\,dT = c_p\,dT = \frac{\gamma R}{\gamma - 1}\,dT \tag{11}$$

where γ is equal to c_p/c_v and is a function of temperature. Another expression for dh is obtained by using equations (10) and (7), so that

$$dh = \frac{dp}{\rho} + T\,ds \tag{11a}$$

By the use of equations (7), (4), and (6),

$$d\left(\frac{s}{R}\right) = \frac{1}{\gamma-1}\, d \ln p - \frac{\gamma}{\gamma-1}\, d \ln \rho \tag{12}$$

and

$$d\left(\frac{s}{R}\right) = \frac{1}{\gamma-1}\, d \ln T - d \ln \rho \tag{12a}$$

can be obtained, and the equation of continuity can be written

$$\nabla \cdot W + \frac{1}{\gamma-1}\frac{D \ln T}{Dt} - \frac{D}{Dt}\frac{s}{R} = 0 \tag{13}$$

Equation (13) can be expressed in a slightly different form. From the definition of the local velocity of sound (reference 20),

$$a^2 = \left(\frac{\partial p}{\partial \rho}\right)_s \tag{14}$$

By the use of equations (12) and (6),

$$a^2 = \gamma \frac{p}{\rho} = \gamma RT \tag{14a}$$

Substituting this relation into equations (12a) and (13), with the use of equation (11), results in

$$d \ln \rho = \frac{dh}{a^2} - d\,\frac{s}{R} \tag{12b}$$

and

$$\nabla \cdot W + \frac{1}{a^2}\frac{Dh}{Dt} - \frac{D}{Dt}\frac{s}{R} = 0 \tag{13a}$$

From equations (9) and (11a),

$$\frac{1}{\rho}\nabla p + \frac{1}{2}\nabla W^2 - \omega^2 r = \nabla I - T\nabla s$$

The equation of motion (2) can then be written

$$\frac{\partial W}{\partial t} - W \times (\nabla \times W) + 2\omega \times W = -\nabla I + T\nabla s \tag{15}$$

An alternative form of equation (15), which involves the vorticity of the absolute motion, is obtained as follows: With the z-axis parallel to ω,

$$V = W + \omega \times r \tag{16}$$

hence

$$\nabla \times V = \nabla \times W + \nabla \times (\omega \times r) \tag{17}$$

But

$$\nabla \times (\omega \times r) = (r \cdot \nabla)\ \omega - (\omega \cdot \nabla)\ r + \omega(\nabla \cdot r) - r(\nabla \cdot \omega) = 2\omega$$

therefore

$$\nabla \times V = \nabla \times W + 2\omega \tag{17a}$$

This relation can also be seen from the following expressions of relative and absolute vorticity expressed in terms of the rotating and stationary cylindrical coordinates r, φ, z and r, θ, z, respectively:

$$\left.\begin{aligned}
(\nabla \times W)_r &= \frac{1}{r}\frac{\partial W_z}{\partial \varphi} - \frac{\partial W_u}{\partial z} \\
(\nabla \times W)_u &= \frac{\partial W_r}{\partial z} - \frac{\partial W_z}{\partial r} \\
(\nabla \times W)_z &= \frac{1}{r}\frac{\partial (W_u r)}{\partial r} - \frac{1}{r}\frac{\partial W_r}{\partial \varphi}
\end{aligned}\right\} \tag{18}$$

$$\left.\begin{aligned}
(\nabla \times V)_r &= \frac{1}{r}\frac{\partial V_z}{\partial \theta} - \frac{\partial V_u}{\partial z} \\
(\nabla \times V)_u &= \frac{\partial V_r}{\partial z} - \frac{\partial V_z}{\partial r} \\
(\nabla \times V)_z &= \frac{1}{r}\frac{\partial (V_u r)}{\partial r} - \frac{1}{r}\frac{\partial V_r}{\partial \theta}
\end{aligned}\right\} \tag{19}$$

and the relation

$$\frac{\partial (V_u r)}{\partial r} \doteq \frac{\partial (W_u r)}{\partial r} + 2\omega r$$

Using equation (17a) results in the alternative form of equation (15)

$$\frac{\partial W}{\partial t} - W \times (\nabla \times V) = -\nabla I + T\nabla s \tag{15a}$$

By use of equations (2), (9), and (11a),

$$\frac{DI}{Dt} = T\frac{Ds}{Dt} + \frac{1}{\rho}\frac{\partial p}{\partial t} + \frac{1}{\rho}(W\cdot\nabla)\ p + W\cdot\frac{DW}{Dt} - U\cdot\frac{DU}{Dt}$$

$$= T\frac{Ds}{Dt} + \frac{1}{\rho}\frac{\partial p}{\partial t} + W\cdot(\omega^2 r - 2\omega\times W) - U\cdot\frac{DU}{Dt} = T\frac{Ds}{Dt} + \frac{1}{\rho}\frac{\partial p}{\partial t} \qquad (20)$$

It may be emphasized that the preceding equation is a consequence of the equation of motion (2) and the thermodynamic relations (4), (6), (7), and (10). For steady relative flow, the rate of change of I along the streamline is seen to be proportional to the rate of change of entropy along the streamline.

The energy equation (3) can be used to express the rate of change of entropy along the streamline by the use of equation (7) as follows:

$$Q = T\frac{Ds}{Dt} \qquad (21)$$

The preceding equations lead to several important general considerations: If the blade rows are not placed too close together and no trailing vortices are shed from preceding blade rows (or where these effects can be neglected), the fluid properties at a fixed point relative to the blade can be taken as constant with respect to time. Consequently, according to equations (20) and (21), the quantities s and I of the gas remain constant along the streamline for adiabatic flow. The invariancy of I means that the rate of change in total enthalpy along the streamline is equal to the angular speed of the blade multiplied by the rate of change in angular momentum (about the machine axis) of the fluid particle along its streamline, which is the well-known Euler turbine equation usually derived under less general conditions. In a cooled turbine where the heat transfer may be large, the rate of change of s and I along the streamline can be corrected by equation (21) for an estimated value of Q. Again, for steady relative flow, equation (15a) shows that either when gradient I and gradient s both vanish or when the difference between ∇I and $T\nabla s$ vanishes, the absolute vorticity either vanishes or is parallel to the relative velocity.

For the flow through a stationary blade row $\omega = 0$, W becomes V, I becomes H, and equation (15a) becomes

$$\frac{\partial V}{\partial t} - V\times(\nabla\times V) = -\nabla H + T\nabla s \qquad (15b)$$

which agrees with similar relations previously obtained by Vazsonyi (reference 21) and Hicks, Guenther, and Wasserman (reference 22). It

is interesting to see that, for relative flow in a rotating blade row, $V \times (\nabla \times V)$ becomes $W \times (\nabla \times V)$ and H becomes I.

If it is assumed that the fluid enters the inlet guide vanes of a turbomachine with uniform H and s and zero vorticity and that the flow is adiabatic, s does not vary in the inlet guide vanes and p is then a function of only ρ, according to equation (12). Consequently, by virtue of Kelvin's circulation theorem, the absolute vorticity will remain zero in passing through the inlet guide vanes and the flow in the inlet guide vanes can be treated on the basis of irrotational absolute flow.

If the guide vanes impart a radial variation of tangential velocity of the fluid in a z-plane downstream of the vanes similar to that in a potential vortex, that is, inversely proportional to the radius, the circulation is constant along the blade span and the fluid maintains a uniform s and H and a zero vorticity of absolute flow entering the following rotor-blade row. If the rotor-blade row is situated far away from the inlet guide vanes, the fluid enters the rotor with a uniform I in the circumferential direction, as well as in the radial direction, and the flow through the rotor blades can again be treated on the basis of zero absolute vorticity and steady relative flow. If the rotor is close to the guide vanes, however, vortices are shed from the inlet guide vanes because of periodic variation in circulation caused by unsteady flow, and the flow downstream of the stator and through the rotor blades should theoretically be treated on the basis of rotational flow.

If the guide vanes impart a radial variation of tangential velocity of the fluid at a z-plane downstream of the vanes not inversely proportional to the radius, the circulation varies along the span of the guide vanes, vortices are shed from the trailing edge to the fluids downstream in the direction of the exit velocity, and the fluid enters the following rotor blades with a uniform s and H but a nonuniform I and a nonzero value of absolute vorticity. Consequently, the flow through the rotor-blade row can no longer be treated on the basis of zero absolute vorticity, even if it is far apart from the preceding guide vanes.

From the preceding discussion, the choice of s and H or I as the two basic thermodynamic variables of the gas besides its velocity components is apparent. Compressor and turbine rotors are usually designed to impart or subtract the same amount of energy to or from the gas radially; hence H is usually radially constant throughout the machine if the inlet flow is uniform (except in the boundary layer along hub and casing walls). If the circumferential velocity of the gas upstream of the blade row is zero or varies inversely with radius, I is then constant throughout the machine. These facts will be utilized in the following developments.

POTENTIAL EQUATION FOR THREE-DIMENSIONAL FLOW THROUGH ROTATING BLADE ROW

Consider first the special case of steady relative flow where the fluid upstream of the blade row is free of vorticity and is uniform in I and s. The adiabatic flow through the blade row is then relatively steady and absolutely irrotational and is most conveniently treated by the use of a velocity potential Φ based on the zero absolute vorticity and related to the relative velocity components through equation (16) as follows:

$$\left.\begin{aligned} \frac{\partial\Phi}{\partial r} &= V_r = W_r \\ \frac{1}{r}\frac{\partial\Phi}{\partial\varphi} &= V_u = W_u + \omega r \\ \frac{\partial\Phi}{\partial z} &= V_z = W_z \end{aligned}\right\} \tag{22}$$

For steady isentropic flow, the continuity equation (13a) becomes

$$\frac{1}{r}\frac{\partial(W_r r)}{\partial r} + \frac{1}{r}\frac{\partial W_u}{\partial\varphi} + \frac{\partial W_z}{\partial z} + \frac{1}{a^2}\left(W_r\frac{\partial h}{\partial r} + \frac{W_u}{r}\frac{\partial h}{\partial\varphi} + W_z\frac{\partial h}{\partial z}\right) = 0 \tag{23}$$

From equations (9) and (22),

$$h = I + \omega\frac{\partial\Phi}{\partial\varphi} - \frac{1}{2}\left[\left(\frac{\partial\Phi}{\partial r}\right)^2 + \left(\frac{1}{r}\frac{\partial\Phi}{\partial\varphi}\right)^2 + \left(\frac{\partial\Phi}{\partial z}\right)^2\right] \tag{24}$$

$$\frac{\partial h}{\partial r} = -\left(W_r\frac{\partial^2\Phi}{\partial r^2} + \frac{W_u}{r}\frac{\partial^2\Phi}{\partial r\partial\varphi} - \frac{V_u^2}{r} + W_z\frac{\partial^2\Phi}{\partial z\partial r}\right) \tag{25a}$$

$$\frac{1}{r}\frac{\partial h}{\partial\varphi} = -\left(\frac{W_r}{r}\frac{\partial^2\Phi}{\partial r\partial\varphi} + \frac{W_u}{r^2}\frac{\partial^2\Phi}{\partial\varphi^2} + \frac{W_z}{r}\frac{\partial^2\Phi}{\partial\varphi\partial z}\right) \tag{25b}$$

$$\frac{\partial h}{\partial z} = -\left(W_r\frac{\partial^2\Phi}{\partial z\partial r} + \frac{W_u}{r}\frac{\partial^2\Phi}{\partial\varphi\partial z} + W_z\frac{\partial^2\Phi}{\partial z^2}\right) \tag{25c}$$

By the use of equations (22) and (25a) to (25c), the continuity equation (23) may be written

$$\left(1 - \frac{W_r^2}{a^2}\right)\frac{\partial^2\Phi}{\partial r^2} + \left(1 - \frac{W_u^2}{a^2}\right)\frac{1}{r^2}\frac{\partial^2\Phi}{\partial\varphi^2} + \left(1 - \frac{W_z^2}{a^2}\right)\frac{\partial^2\Phi}{\partial z^2} -$$

$$2\frac{W_rW_u}{a^2}\frac{1}{r}\frac{\partial^2\Phi}{\partial r\partial\varphi} - 2\frac{W_uW_z}{a^2}\frac{1}{r}\frac{\partial^2\Phi}{\partial\varphi\partial z} - 2\frac{W_zW_r}{a^2}\frac{\partial^2\Phi}{\partial z\partial r} + \frac{1}{r}\left(1 + \frac{V_u^2}{a^2}\right)\frac{\partial\Phi}{\partial r} = 0 \tag{26}$$

Equation (26) is then the three-dimensional potential equation for isentropic flow in a rotating blade row. It is seen from this equation and equation (16) that the three-dimensional flow through a rotating blade row cannot be treated by a three-dimensional flow through a similar stationary blade row with the same inlet condition relative to the blade row, as in the case of two-dimensional flow on a cylindrical surface, because the difference between the absolute and relative vorticity 2ω does not enter into the two-dimensional flow on a cylindrical surface but does enter into the three-dimensional case.

Equation (26) is very similar to the ordinary three-dimensional potential equation for flow past stationary objects, except that both relative and absolute velocity components are involved in the coefficients of Φ derivatives and that Φ is directly defined by the absolute velocity. The real difficulty in solving this equation lies in the fact that all the velocity components change greatly in passing through a turbomachine and, consequently, the equation cannot be linearized and yet give a good approximate answer. For supersonic relative velocity, the method of characteristic surfaces (references 23 and 24) may be used to solve equation (26), with the initial conditions not given on a characteristic surface. For subsonic relative flow, the equation is more conveniently written in the form

$$\frac{\partial^2\Phi}{\partial r^2} + \frac{1}{r}\frac{\partial\Phi}{\partial r} + \frac{1}{r^2}\frac{\partial^2\Phi}{\partial\varphi^2} + \frac{\partial^2\Phi}{\partial z^2} + W_r\frac{\partial \ln\rho}{\partial r} + \frac{W_u}{r}\frac{\partial \ln\rho}{\partial\varphi} + W_z\frac{\partial \ln\rho}{\partial z} = 0 \tag{26a}$$

and can be solved by Southwell's relaxation method (reference 25) or other numerical methods using the differentiation formulas obtained in reference 26 to take care of the unequal grid spacings near the blade surfaces and the curved hub and casing walls. The last three terms in equation (26) are computed from the Φ values or velocities obtained in the previous cycle and kept as constants during each improvement of Φ values, and the whole process is repeated until the desired accuracy is obtained. Because a three-dimensional stream function cannot be defined, the use of velocity potential results in a boundary-value problem of the second kind, which is more difficult to handle in the calculation than the first kind. The boundary condition to be satisfied is that the relative velocity normal to the moving blade is zero, or

$$W_r\, n_r + W_u\, n_u + W_z\, n_z = 0 \tag{27}$$

where n is the unit normal vector at the boundary surface, and that, at inlet and exit stations far away from the blade, the velocity is parallel to the bounding hub and casing walls, which, in the case of the axial machine, means that

$$V_r = \frac{\partial \Phi}{\partial r} = 0 \quad \text{at} \quad z = \pm\infty \tag{27a}$$

In both the subsonic and supersonic cases, the solution is extremely time-consuming. Furthermore, this direct approach to the three-dimensional problem requires that the absolute velocity at the inlet to the blade row be irrotational and the flow be adiabatic. In actual machines, the flow entering the blade rows is always rotational, which is caused by a nonuniform total enthalpy and entropy at the inlet of the machine, by entropy change caused by shock waves or heat transfer, or by the effect of boundary layers along the hub and casing walls. Some other approach to the problem, which is simpler to handle and is also applicable to rotational inlet flow, is therefore desirable. One approach is suggested in the following sections.

FOLLOWING FLUID FLOW ON RELATIVE STREAM SURFACES

In order to solve the steady three-dimensional flow, with either an irrotational or rotational absolute flow at the inlet, in a relatively simple manner, an approach is taken to obtain the three-dimensional solution by an appropriate combination of mathematically two-dimensional flows on essentially two different kinds of relative stream surface (figs. 1 to 3). The first kind of relative stream surface is one whose intersection with a z-plane either upstream of the blade row or midway in the blade row forms a circular arc (fig. 1). The second kind of relative stream surface is one whose intersection with a z-plane either upstream of the blade row or somewhere inside the blade row forms a radial line (fig. 2). These two kinds of relative stream surface will be hereinafter designated stream surfaces S_1 and S_2, respectively.

S_1 Stream Surface of First Kind

In figure 1 is shown a stream surface of the first kind formed by fluid particles lying on a circular arc ab of radius oa upstream of the blade row. It is usually assumed in ordinary two-dimensional treatments (for example, references 27 to 30) that the stream surface thus formed is a surface of revolution. In the following development, the surface will be allowed to take whatever shape it should have in order to satisfy all the equations governing the three-dimensional flow.

In most cases, the deviation of the surface from a surface of revolution is not large, and it is satisfactory to consider S_1 surfaces formed by fluid particles originally lying on a circular arc upstream of the blade row. If the rotationality of the inlet absolute flow is large, if the blade is designed for a velocity diagram quite different from the free-vortex type, or if the blade length is long in the direction of the through flow (radial- and mixed-flow machines), the twist of the surface may be quite large, resulting in very large circumferential derivatives. If this effect is found during calculation or known from experience, it is more satisfactory to consider S_1 surfaces formed by fluid particles originally lying, in front of the blade row, on curves inclined to the circular arc in a direction opposite to the twist of the surface. In this way, the intersection of the S_1 surface with a constant z-plane about midway in the flow path is a nearly circular arc, and the total twist of the surface will be about equally distributed toward the upstream and downstream directions (fig. 3). If this distribution of the twist of the stream surface is still not enough, it may be necessary to divide the complete flow path into a few shorter paths and consider an S_1 surface for each of them. Under these conditions, S_1 surfaces formed by fluid particles originally lying on the hub or casing walls upstream of the blade row should not be chosen in order that the complication arising from the possibility of fluid particles leaving the wall and flowing along the blade surface may be avoided. In such cases it is better to consider the S_1 surface a short distance from the hub and casing; otherwise, for an approximate solution the fluid can be considered to follow the hub and casing walls, which are surfaces of revolution, and the calculation is thus much simpler than that for a general surface.

S_2 Stream Surface of Second Kind

A stream surface of the second kind is shown in figure 2. The most important surface of this family is the one about midway between two blades dividing the mass flow in the channel into two approximately equal parts. This surface is designated the mean stream surface ($S_{2,m}$). For blades with radial elements, such as the one shown in figure 2, it is convenient to consider a mean stream surface formed by fluid particles originally lying on a radial line ab upstream of the blade row if the twist of the surface is not expected to be large. Otherwise, the radial line is chosen about midway in the passage with the fluid particles originally starting out from a curved line upstream of the blade row such as shown in figure 3.

The mean stream surfaces for axial-flow gas turbines designed on a free-vortex velocity diagram are shown in figures 3 and 4. The radial element of the mean stream surface (fig. 4) is chosen accordingly as the

stator is designed to aline the blade sections radially at the leading edge, trailing edge, or somewhere between. Inasmuch as the rotor-blade sections are usually alined radially at or near the center of gravity of the blade sections, the radial position of the mean relative stream surface is chosen at the same position (figs. 3 and 4). The continuation of the stream surface outside the blade row is not shown. The mean stream surfaces for the inlet stage of a multistage axial compressor designed on the principle of a symmetrical velocity diagram at all radii are shown in figure 5.

Both of these two kinds of stream surface are employed, in general, in the solution of the three-dimensional problem. The correct solution of one surface often requires some data obtainable from the other, and, consequently, successive solutions between these two are involved. Yet, the solution of each surface is manageable with the present mathematical technique and computational facilities. In many practical cases, and especially in the inverse problem, however, this iteration may not be required if only an approximate solution is required or if the prescribed values lead to a satisfactory blade shape. These points will be discussed in the section next to the last (pp. 53 to 57).

Relations among Relative Velocity of Fluid, Coordinates of Stream Surface, and Normal to Stream Surface

In general, the coordinates of the stream surfaces and their differentials are related, respectively, by the following equations:

$$S(r,\varphi,z) = 0 \tag{28}$$

$$\frac{\partial S}{\partial r}\,dr + \frac{\partial S}{\partial \varphi}\,d\varphi + \frac{\partial S}{\partial z}\,dz = 0 \tag{29}$$

Rather than use the three partial derivatives of S with respect to the coordinates, it is convenient to consider the unit vector $\mathbf{n}$ normal to the surface, which is related to S by

$$\frac{n_r}{\frac{\partial S}{\partial r}} = \frac{n_u}{\frac{1}{r}\frac{\partial S}{\partial \varphi}} = \frac{n_z}{\frac{\partial S}{\partial z}} = \frac{1}{\sqrt{\left(\frac{\partial S}{\partial r}\right)^2 + \left(\frac{1}{r}\frac{\partial S}{\partial \varphi}\right)^2 + \left(\frac{\partial S}{\partial z}\right)^2}} \tag{30}$$

The vector $\mathbf{n}$ is, of course, perpendicular to the relative velocity $\mathbf{W}$, so that

$$\mathbf{n} \cdot \mathbf{W} = 0$$

or

$$n_r W_r + n_u W_u + n_z W_z = 0 \tag{31}$$

By using equation (30), equation (29) can be written

$$n_r \, dr + n_u \, r \, d\varphi + n_z \, dz = 0 \tag{29a}$$

The vectors $\mathbf{n}$ and $\mathbf{W}$ are shown on S_1 and S_2 surfaces in figures 1 and 2.

EQUATIONS GOVERNING FLUID FLOW ON S_1 SURFACE FOR AXIAL-FLOW AND AXIAL-DISCHARGE MIXED-FLOW TURBOMACHINES

If the fluid motion on S_1 is followed, equations (28) and (31) can be used to eliminate one of the three coordinates. For axial-flow (figs. 6(a) to 6(c)) and axial-discharge mixed-flow turbomachines (fig. 6(d)), it is convenient to express r in terms of φ and z. For radial-flow and radial-discharge mixed-flow turbomachines (figs. 6(e) and 6(f)), this system will encounter difficulty at the exit where the rate of change of fluid state with respect to z becomes infinite. It is therefore necessary to eliminate z and to consider r and φ as the two independent variables.

Flow Along General S_1 Surface

For axial- and mixed-flow turbomachines, any quantity q on the S_1 surface is considered a function of φ and z; that is,

$$q = q\left[\varphi, z, r(\varphi, z)\right]$$

The change in q along S_1 due to a small change in φ while z is held constant is (see fig. 1)

$$dq = \frac{\partial q}{\partial \varphi} d\varphi + \frac{\partial q}{\partial r} \frac{\partial r}{\partial \varphi} d\varphi$$

From equation (29a),

$$\frac{\partial r}{\partial \varphi} = -\frac{n_u r}{n_r}$$

hence

$$dq = \left(\frac{\partial q}{\partial \varphi} - \frac{n_u r}{n_r}\frac{\partial q}{\partial r}\right) d\varphi$$

Similarly, for $d\varphi = 0$,

$$dq = \left(\frac{\partial q}{\partial z} - \frac{n_z}{n_r}\frac{\partial q}{\partial r}\right) dz$$

With a bold partial derivative sign used to denote the rate of change of any quantity q on S_1 with respect to φ or z, with the other kept constant, the preceding relations give

$$\left.\begin{aligned} \frac{1}{r}\frac{\partial q}{\partial \varphi} &= \frac{1}{r}\frac{\partial q}{\partial \varphi} - \frac{n_u}{n_r}\frac{\partial q}{\partial r} \\ \frac{\partial q}{\partial z} &= \frac{\partial q}{\partial z} - \frac{n_z}{n_r}\frac{\partial q}{\partial r} \end{aligned}\right\} \tag{32}$$

With the relations (31) and (32), the rate of change of q along a streamline on S_1 is

$$\frac{Dq}{Dt} = \frac{W_u}{r}\frac{\partial q}{\partial \varphi} + W_z\frac{\partial q}{\partial z} \tag{33}$$

Equations of continuity and motion. - When the fluid motion is followed along the stream surface and equations (31) and (32) are used, the continuity equation for steady relative motion becomes

$$\frac{1}{r}\frac{\partial(\rho W_u)}{\partial \varphi} + \frac{\partial(\rho W_z)}{\partial z} = \rho\ c(\varphi, z) \tag{34}$$

where

$$c(\varphi, z) = -\frac{1}{n_r}\left(\frac{n_r}{r}\frac{\partial(W_r r)}{\partial r} + n_u\frac{\partial W_u}{\partial r} + n_z\frac{\partial W_z}{\partial r}\right) \tag{35}$$

For rotational steady relative motion, the equations of motion (14) in the radial, circumferential, and axial directions are

$$\left.\begin{aligned}
-\frac{W_u^2}{r} - W_u\frac{\partial W_u}{\partial r} + \frac{W_u}{r}\frac{\partial W_r}{\partial \varphi} + W_z\left(\frac{\partial W_r}{\partial z} - \frac{\partial W_z}{\partial r}\right) - 2\omega W_u &= -\frac{\partial I}{\partial r} + T\frac{\partial s}{\partial r} \\
\frac{W_r W_u}{r} + W_r\frac{\partial W_u}{\partial r} - \frac{W_r}{r}\frac{\partial W_r}{\partial \varphi} - W_z\left(\frac{1}{r}\frac{\partial W_z}{\partial \varphi} - \frac{\partial W_u}{\partial z}\right) + 2\omega W_r &= -\frac{1}{r}\frac{\partial I}{\partial \varphi} + \frac{T}{r}\frac{\partial s}{\partial \varphi} \\
-W_r\left(\frac{\partial W_r}{\partial z} - \frac{\partial W_z}{\partial r}\right) + W_u\left(\frac{1}{r}\frac{\partial W_z}{\partial \varphi} - \frac{\partial W_u}{\partial z}\right) &= -\frac{\partial I}{\partial z} + T\frac{\partial s}{\partial z}
\end{aligned}\right\} \tag{36}$$

Relations (9), (16), (31), and (32) along the relative stream surface S_1 can be used to reduce equations (36) to the following:

$$\left.\begin{aligned}
-\frac{W_u^2}{r} + \frac{W_u}{r}\frac{\partial W_r}{\partial \varphi} + W_z\frac{\partial W_r}{\partial z} - 2\omega W_u &= -\left(\frac{\partial h}{\partial r} - T\frac{\partial s}{\partial r} - \omega^2 r\right) \\
\frac{W_r W_u}{r} - \frac{W_r}{r}\frac{\partial W_r}{\partial \varphi} - W_z\left(\frac{1}{r}\frac{\partial W_z}{\partial \varphi} - \frac{\partial W_u}{\partial z}\right) + 2\omega W_r &= -\frac{1}{r}\frac{\partial I}{\partial \varphi} + \frac{T}{r}\frac{\partial s}{\partial \varphi} - \frac{n_u}{n_r}\left(\frac{\partial h}{\partial r} - T\frac{\partial S}{\partial r} - \omega^2 r\right) \\
-W_r\frac{\partial W_r}{\partial z} + W_u\left(\frac{1}{r}\frac{\partial W_z}{\partial \varphi} - \frac{\partial W_u}{\partial z}\right) &= -\frac{\partial I}{\partial z} + T\frac{\partial s}{\partial z} - \frac{n_z}{n_r}\left(\frac{\partial h}{\partial r} - T\frac{\partial S}{\partial r} - \omega^2 r\right)
\end{aligned}\right\} \tag{37}$$

The last term in each of the preceding three equations is proportional to the components of the normal vector and therefore can be expressed as a component of a vector that is parallel to n and has the dimension of force per unit mass. If this term is defined as

$$f = -\frac{1}{n_r}\left(\frac{\partial h}{\partial r} - T\frac{\partial s}{\partial r} - \omega^2 r\right) n = -\frac{1}{n_r}\left(\frac{1}{\rho}\frac{\partial p}{\partial r} - \omega^2 r\right) n \tag{38}$$

the preceding equations can be written

$$\frac{W_u}{r}\frac{\partial W_r}{\partial \varphi} + W_z\frac{\partial W_r}{\partial z} - \frac{W_u^2}{r} - 2\omega W_u = f_r \tag{39a}$$

$$\frac{W_r W_u}{r} - \frac{W_r}{r}\frac{\partial W_r}{\partial \varphi} - W_z\left(\frac{1}{r}\frac{\partial W_z}{\partial \varphi} - \frac{\partial W_u}{\partial z}\right) + 2\omega W_r = -\frac{1}{r}\frac{\partial I}{\partial \varphi} + \frac{T}{r}\frac{\partial s}{\partial \varphi} + f_u \tag{39b}$$

$$-W_r\frac{\partial W_r}{\partial z} + W_u\left(\frac{1}{r}\frac{\partial W_z}{\partial \varphi} - \frac{\partial W_u}{\partial z}\right) = -\frac{\partial I}{\partial z} + T\frac{\partial s}{\partial z} + f_z \tag{39c}$$

Similarly, the equations of motion in the form of equations (2) can be written

$$\left.\begin{aligned}
\frac{W_u}{r}\frac{\partial W_r}{\partial \varphi} + W_z\frac{\partial W_r}{\partial z} - \frac{V_u^2}{r} &= f_r' \\
\frac{W_u}{r}\frac{\partial W_u}{\partial \varphi} + W_z\frac{\partial W_u}{\partial z} + \frac{W_r W_u}{r} + 2\omega W_r &= -\frac{1}{\rho r}\frac{\partial p}{\partial \varphi} + f_u' \\
\frac{W_u}{r}\frac{\partial W_z}{\partial \varphi} + W_z\frac{\partial W_z}{\partial z} &= -\frac{1}{\rho}\frac{\partial p}{\partial z} + f_z'
\end{aligned}\right\} \tag{40}$$

where

$$f' = -\frac{1}{n_r}\frac{1}{\rho}\frac{\partial p}{\partial r}\,n$$

Because this vector f is parallel to n, it is perpendicular to the relative velocity of fluid, or

$$f_r W_r + f_u W_u + f_z W_z = 0 \tag{41}$$

By the use of equation (41) and equations (39), it can be shown that for steady flow on an S_1 surface,

$$\frac{DI}{Dt} = T\frac{Ds}{Dt} \tag{41a}$$

which agrees with equation (20). Therefore, for the present problem of steady relative flow on a stream surface, the relation (41a) can be taken either as one of the equations of motion or to represent the relation given by equation (41). In other words, there are only four independent relations among equations (39a), (39b), (39c), (41), and (41a).

Just as in the case of the continuity equation, either set of the preceding equations of motion is expressed in terms of the special partial derivatives with respect to the two independent variables φ and z. The effect of radial pressure gradient is taken into account in all these equations by the f term, which is neglected in the ordinary two-dimensional treatment on a surface of revolution. Equations (28), (31), (34), and (39) or (40), however, lead to a possibility of correctly solving the three-dimensional flow of fluid particles on an S_1 surface in a mathematically two-dimensional manner.

Principal equation. - The equations of continuity and the equation of motion in the circumferential direction can be combined into a principal equation through the use of a stream function ψ as follows: First, if a variable b is introduced such that

$$\frac{D \ln b}{Dt} = -c + \frac{n_z}{n_r}\frac{W_z}{r} \tag{42}$$

or

$$\ln \frac{b}{b_i} = -\int_{t_i}^{t} \left(c - \frac{n_z}{n_r}\frac{W_z}{r}\right) dx = -\int_{L_i}^{L} \frac{1}{W}\left(c - \frac{n_z}{n_r}\frac{W_z}{r}\right) dx \tag{42a}$$

in which the integration is performed along a streamline on the S_1 surface, then the continuity equation (34) can be written

$$\frac{\partial(b\rho W_u)}{\partial\varphi} + \frac{\partial(b\rho W_z r)}{\partial z} = 0 \tag{34a}$$

The preceding equation is the necessary and sufficient condition that there exist a function ψ with

$$\frac{\partial\psi}{\partial\varphi} = rb\rho W_z \tag{43a}$$

$$\frac{\partial\psi}{\partial z} = -b\rho W_u \tag{43b}$$

The difference in ψ_1 at two points j and k on the S_1 surface is

$$\psi^k - \psi^j = \int_j^k d\psi = \int_j^k b\rho(W_z r\, d\varphi - W_u\, dz)$$

In particular, the difference in ψ at two points j and k on the constant-z plane at the inlet where the fluid state is uniform is

$$\psi^k - \psi^j = b_i\rho_i\, W_{z,i} \int_{\varphi^j}^{\varphi^k} r\, d\varphi$$

These two equations show that, physically, the integrating factor b can be interpreted as proportional to the local radial thickness of a thin stream sheet whose mean surface is the stream surface considered here. The continuity equation (34a) can also be obtained by considering the mass flow going into an element of such a stream sheet as shown in figure 7. By equating to zero the mass flow going into the element, which is defined by two axial planes $d\varphi$ apart and two normal planes dz apart (see fig. 7(a)), and letting $d\varphi$ and dz approach zero, there is obtained

$$\frac{\partial(\tau\rho W_u)}{\partial\varphi} + \frac{\partial(\tau\rho W_z r)}{\partial z} = 0 \tag{34b}$$

where τ is the radial thickness of the stream sheet. From equations (34a) and (34b), it is apparent that b is proportional to τ, and the differences in ψ at two points j and k as given by the two equations preceding equation (34b) are proportional to the mass flow across any line joining the two points. In actual computation, only the ratio b to b_i or τ to τ_i is important (a different initial value amounts to a different constant multiplier of the relation between ψ and mass flow). In the following, b will be retained in the equation, but in actual calculation it is simpler to evaluate the ratio τ to τ_i than to evaluate the ratio b to b_i, both from the data obtained on the S_2 surface to be discussed later. Although the evaluation of this ratio requires, in general, calculations on the S_2 surfaces, a means is nevertheless provided to determine correctly the flow on a general S_1 surface through iteration.

From equation (43),

$$b\rho\,\frac{1}{r}\frac{\partial W_z}{\partial\varphi} = \frac{1}{r^2}\frac{\partial^2\psi}{\partial\varphi^2} - \frac{1}{r^2}\frac{\partial\ \ln b\rho}{\partial\varphi}\frac{\partial\psi}{\partial\varphi} + \frac{n_u}{n_r}\frac{1}{r^2}\frac{\partial\psi}{\partial\varphi} \tag{44a}$$

$$-b\rho\,\frac{\partial W_u}{\partial z} = \frac{\partial^2\psi}{\partial z^2} - \frac{\partial\ \ln b\rho}{\partial z}\frac{\partial\psi}{\partial z} \tag{44b}$$

The third terms in the preceding equations can be expressed in terms of h through the use of equation (12b):

$$d\ \ln b\rho = d\ \ln b + \frac{1}{a^2}\,dh - ds^* \tag{45}$$

where $s^* = s/R$. But from equations (9) and (43),

$$h = I + \frac{\omega^2 r^2}{2} - \frac{W_r^{\,2}}{2} - \frac{1}{2}(b\rho)^{-2}\left[\left(\frac{1}{r}\frac{\partial\psi}{\partial\varphi}\right)^2 + \left(\frac{\partial\psi}{\partial z}\right)^2\right] \tag{46}$$

Then from equations (45) and (46),

$$\left[a^2 - \left(W_u^{\,2} + W_z^{\,2}\right)\right]\frac{1}{r}\frac{\partial\ \ln b\rho}{\partial\varphi} = \frac{1}{r}\frac{\partial}{\partial\varphi}\left(I + \frac{\omega^2 r^2 - W_r^{\,2}}{2}\right) + \frac{a^2}{r}\left(\frac{\partial\ \ln b}{\partial\varphi} - \frac{\partial s^*}{\partial\varphi}\right) -$$

$$(b\rho)^{-1}\left(\frac{W_z}{r^2}\frac{\partial^2\psi}{\partial\varphi^2} - \frac{W_u}{r}\frac{\partial^2\psi}{\partial\varphi\partial z}\right) - \frac{W_z^{\,2}}{r}\frac{n_u}{n_r}$$

$$\left[a^2 - \left(W_u^{\,2} + W_z^{\,2}\right)\right] \frac{\partial \ln b\rho}{\partial z} = \frac{\partial}{\partial z}\left(I + \frac{\omega^2 r^2 - W_r^{\,2}}{2}\right) + a^2\left(\frac{\partial \ln b}{\partial z} - \frac{\partial s^*}{\partial z}\right) -$$

$$(b\rho)^{-1}\left(\frac{W_z}{r}\frac{\partial^2\psi}{\partial\varphi\partial z} - W_u\frac{\partial^2\psi}{\partial z^2}\right) - \frac{W_z^{\,2}}{r}\frac{n_z}{n_r}$$

Substituting the preceding two equations into equations (44a) and (44b) and adding yield

$$b\rho\left[a^2 - \left(W_u^{\,2} + W_z^{\,2}\right)\right]\left(\frac{1}{r}\frac{\partial W_z}{\partial\varphi} - \frac{\partial W_u}{\partial z}\right) = \frac{a^2 - W_u^{\,2}}{r^2}\frac{\partial^2\psi}{\partial\varphi^2} - 2\frac{W_u W_z}{r}\frac{\partial^2\psi}{\partial z^2} +$$

$$(a^2 - W_z^{\,2})\frac{\partial^2\psi}{\partial z^2} - \left[\frac{1}{r}\frac{\partial}{\partial\varphi}\left(I + \frac{\omega^2 r^2 - W_r^{\,2}}{2}\right) + \frac{a^2}{r}\left(\frac{\partial \ln b}{\partial\varphi} - \frac{\partial s^*}{\partial\varphi}\right) - \frac{a^2 - W_u^{\,2}}{r}\frac{n_u}{n_r}\right]\frac{1}{r}\frac{\partial\psi}{\partial\varphi} -$$

$$\left[\frac{\partial}{\partial z}\left(I + \frac{\omega^2 r^2 - W_r^{\,2}}{2}\right) + a^2\left(\frac{\partial \ln b}{\partial z} - \frac{\partial s^*}{\partial z}\right) - \frac{W_z^{\,2}}{r}\frac{n_z}{n_r}\right]\frac{\partial\psi}{\partial z} \qquad (47)$$

Substituting the preceding equation into equation (39b) and dividing by a^2 give the principal equation for the determination of fluid motion along a general S_1 surface:

$$\left(1 - \frac{W_u^{\,2}}{a^2}\right)\frac{1}{r^2}\frac{\partial^2\psi}{\partial\varphi^2} - 2\frac{W_u W_z}{a^2 r}\frac{\partial^2\psi}{\partial\varphi\partial z} + \left(1 - \frac{W_z^{\,2}}{a^2}\right)\frac{\partial^2\psi}{\partial z^2} + \frac{N}{r}\frac{\partial\psi}{\partial\varphi} + M\frac{\partial\psi}{\partial z} = 0 \qquad (48)$$

where

$$M = -\frac{\partial \ln b}{\partial z} + \frac{\partial s^*}{\partial z} + \frac{1}{a^2}\left(-\frac{\partial I}{\partial z} + W_r\frac{\partial W_r}{\partial z} + \frac{\omega^2 r^2 + W_z^{\,2}}{r}\frac{n_z}{n_r}\right)$$

$$N = -\frac{1}{r}\frac{\partial \ln b}{\partial\varphi} + \frac{1}{r}\frac{\partial s^*}{\partial\varphi} + \frac{1}{a^2}\left(-\frac{1}{r}\frac{\partial I}{\partial\varphi} + \frac{W_r}{r}\frac{\partial W_r}{\partial\varphi} + \frac{a^2 - (W_u^{\,2} + W_z^{\,2})}{r}\frac{W_r}{W_z} +\right.$$

$$\left.\frac{a^2 - (W_u^{\,2} + \omega^2 r^2)}{r}\frac{n_u}{n_r}\right) + \frac{a^2 - \left(W_u^{\,2} + W_z^{\,2}\right)}{a^2 W_z^{\,2}}\left[-\frac{1}{r}\frac{\partial I}{\partial\varphi} + \frac{T}{r}\frac{\partial s}{\partial\varphi} + f_u + W_r\left(\frac{1}{r}\frac{\partial W_r}{\partial\varphi} - 2\omega\right)\right]$$

The equation of the characteristics of the differential equation (48) is (reference 31)

$$\left(1 - \frac{W_z^2}{a^2}\right) r\left(\frac{d\varphi}{dz}\right)^2 + 2\,\frac{W_u W_z}{a^2}\, r\,\frac{d\varphi}{dz} + \left(1 - \frac{W_u^2}{a^2}\right) = 0 \tag{49}$$

from which

$$r\,\frac{d\varphi}{dz} = -\,\frac{W_u W_z}{a^2 - W_z^2} \pm \frac{\sqrt{a^2(W_u^2 + W_z^2 - a^2)}}{a^2 - W_z^2} \tag{50}$$

Equation (50) shows that the characteristics are real when $\sqrt{W_u^2 + W_z^2} > a$, in which case the method of characteristics for two independent variables (references 20, 30, 31, and 32) can be applied. When $\sqrt{W_u^2 + W_z^2} < a$, the characteristics are imaginary, and it is more convenient to solve the equation by relaxation (references 25, 33, 26, and 29) and matrix methods (references 26 and 29) in the following form, which is obtained by substituting equations (44) into equation (39b):

$$\frac{1}{r^2}\frac{\partial^2\psi}{\partial\varphi^2} + \frac{\partial^2\psi}{\partial z^2} - \left[\frac{1}{r^2}\left(\frac{\partial \ln b\rho}{\partial\varphi} - \frac{n_u}{n_r}\right)\frac{\partial\psi}{\partial\varphi} + \frac{\partial \ln b\rho}{\partial z}\frac{\partial\psi}{\partial z}\right] +$$

$$\frac{(b\rho)^2}{\frac{1}{r}\frac{\partial\psi}{\partial\varphi}}\left[-\frac{1}{r}\frac{\partial I}{\partial\varphi} + \frac{T}{r}\frac{\partial s}{\partial\varphi} + f_u + \frac{W_r}{r}\frac{\partial W_r}{\partial\varphi} - W_r\left(\frac{W_u}{r} + 2\omega\right)\right] = 0 \tag{48a}$$

Procedure of solution. - It may be noted that equation (39b), instead of (39c), is chosen to form the principal equation (48) or (48a), because f_u is, in general, much smaller than f_z. The various quantities appearing in equation (48) or (48a) are to be computed from other equations given earlier. With the introduction of the stream function, there are altogether seven basic independent relations - one energy equation (21); three equations of motion, (48) or (48a), (39a), and (39c); two equations between ψ derivatives and fluid properties, (43a) and (43b); and the orthogonal relation between **W** and **f**, equation (41) or (41a). On the other hand, there are ten basic dependent variables in ψ, b, W_r, W_u, W_z, f_r, f_u, f_z, s, and I (or h or ρ) to define the flow and the shape of the surface. In general, the variable b is to be evaluated according to equation (42a) or from the variation in the radial thickness of stream sheet using the data obtained in the solution of S_2 surfaces and is therefore considered as given here. If during the complete solution of the three-dimensional flow the shape of an S_1 surface is taken as the one obtained by joining corresponding streamlines obtained on S_2 surfaces of the preceding cycle, two relations between the n- (or f-) components are given by equations (29), and there are now altogether nine equations to be solved to

find the nine unknowns. Alternatively, the variation of W_r may be considered as known from the S_2 solutions of the previous cycle, and the remaining eight variables, which determine the flow on and the shape of the S_1 surfaces, can be determined from the seven preceding relations given and the following additional relation: Because f_r, f_u, and f_z, respectively, are proportional to $\frac{\partial S}{\partial r}$, $\frac{1}{r}\frac{\partial S}{\partial \varphi}$, and $\frac{\partial S}{\partial \varphi}$ of the integral surface S, they satisfy the following equation (reference 34):

$$\mathbf{f} \cdot \nabla \times \mathbf{f} = 0 \tag{51}$$

which may be written

$$f_r\left[\frac{1}{r}\frac{\partial f_z}{\partial \varphi} - \frac{1}{r}\frac{\partial(f_u r)}{\partial r}\right] + f_u\left(\frac{\partial f_r}{\partial z} - \frac{\partial f_z}{\partial r}\right) + f_z\left[\frac{1}{r}\frac{\partial(f_u r)}{\partial r} - \frac{1}{r}\frac{\partial f_r}{\partial \varphi}\right] = 0 \tag{51a}$$

By using equations (31) and (32), equation (51a) becomes simply

$$\frac{\partial}{\partial \varphi}\left(\frac{f_z}{f_r}\right) = \frac{\partial}{\partial z}\left(\frac{f_u r}{f_r}\right) \tag{51b}$$

This equation can be used to give f_u by integrating along a constant φ line:

$$\frac{f_u r}{f_r} = \left(\frac{f_u r}{f_r}\right)_{z=z_o} + \int_{z_o}^{z} \frac{\partial}{\partial \varphi}\left(\frac{f_z}{f_r}\right) dx \tag{51c}$$

If at $z = z_o$, $f_u = 0$, then

$$f_u = \frac{f_r}{r}\int_{z_o}^{z} \frac{\partial}{\partial \varphi}\left(\frac{f_z}{f_r}\right) dx \tag{51d}$$

In this case, then, the shape of the S_1 surface is determined after the f-components (or n-components) are obtained in the solution. In either case, equations (21) and (41a) are invariably to be used first to determine the change of s and I. If the flow is isentropic, s and I remain constant along its streamlines on the surface. (For such a case and for a uniform inlet condition, ρ in the continuity equation may be replaced by $h^{\frac{1}{\gamma-1}}$ and, consequently, the φ and z derivatives of s, as well as those of I, will not be involved in the equations (46) to (48)). In case of heat transfer or shock, the changes in s and I can be estimated by whatever method is available

and used in the calculation. For supersonic flow, all the equations are used to compute the fluid state at each point and the solution is carried downstream step by step. For subsonic flow, iteration over the whole domain is necessary. The details of these computations will be given in the last section. In general, the solution of the flow on the general S_1 surface is very laborious, and is to be used in the final stages of calculation of the complete three-dimensional problem or when a high-speed computing machine is available.

If the flow is such that it may be assumed to take place on a surface of revolution (at the hub and casing walls or other radii), the equations are considerably simplified as follows:

Flow along Surface of Revolution

When the S_1 surface is a surface of revolution,

$$n_u = f_u = 0 \tag{52}$$

Let

$$-\frac{n_z}{n_r} = -\frac{f_z}{f_r} = \frac{W_r}{W_z} = \tan\sigma = \lambda \tag{53}$$

where λ is a given function of z. (For a conical flow surface, λ is simply a constant.) Equation (35) now gives

$$c = -\left(\frac{W_r}{r} + \frac{\partial W_r}{\partial r}\right) + \lambda\frac{\partial W_z}{\partial r} \tag{54}$$

Whether c can be taken as zero will be determined by the relative magnitude of the three terms on the right side of the equation. In general, for nonnegligible c, equations (43) now become

$$\frac{\partial\psi}{\partial\varphi} = rb\rho W_z \tag{55a}$$

$$\frac{\partial\psi}{\partial z} = -b\rho W_u \tag{55b}$$

Because W_r is now related to W_z by equation (53), the three velocity components can be solved simultaneously as follows: By use of the relations (52) and (53), equation (39b) can be changed to

$$(1+\lambda^2)\frac{1}{r}\frac{\partial W_z}{\partial\varphi} - \frac{\partial W_u}{\partial z} - \lambda\left(\frac{W_u}{r} + 2\omega\right) - \frac{1}{W_z}\left(\frac{1}{r}\frac{\partial I}{\partial\varphi} - \frac{T}{r}\frac{\partial s}{\partial\varphi}\right) = 0 \tag{56}$$

Instead of equation (46),

$$h = I + \frac{\omega^2 r^2}{2} - \frac{1}{2}(b\rho)^{-2}\left[\left(1+\lambda^2\right)\left(\frac{1}{r}\frac{\partial\psi}{\partial\varphi}\right)^2 + \left(\frac{\partial\psi}{\partial z}\right)^2\right] \tag{57}$$

should be written. Then

$$(a^2-W^2)\frac{1}{r}\frac{\partial \ln b\rho}{\partial\varphi} = \frac{1}{r}\frac{\partial I}{\partial\varphi} + \frac{a^2}{r}\left(\frac{\partial \ln b}{\partial\varphi} - \frac{\partial s^*}{\partial\varphi}\right) - (b\rho)^{-1}\left[\left(1+\lambda^2\right)\frac{W_z}{r^2}\frac{\partial^2\psi}{\partial\varphi^2} - \frac{W_u}{r}\frac{\partial^2\psi}{\partial\varphi\partial z}\right]$$

$$(a^2-W^2)\frac{\partial \ln b\rho}{\partial z} = \frac{\partial I}{\partial z} + \lambda\omega^2 r + a^2\left(\frac{\partial \ln b}{\partial z} - \frac{\partial s^*}{\partial z}\right) + \left(W_r{}^2+W_z{}^2\right)\frac{\lambda}{r} - W_z{}^2\lambda\frac{d\lambda}{dz} -$$

$$(b\rho)^{-1}\left[\left(1+\lambda^2\right)\frac{W_z}{r}\frac{\partial^2\psi}{\partial\varphi\partial z} - W_u\frac{\partial^2\psi}{\partial z^2}\right] \tag{58}$$

Combining the preceding equations with equations (55) and substituting the resulting equation into equation (56) give the following principal equation for the flow on a surface of revolution:

$$\left(1+\lambda^2\right)\left(1-\frac{W_u{}^2}{a^2}\right)\frac{1}{r^2}\frac{\partial^2\psi}{\partial\varphi^2} - 2\left(1+\lambda^2\right)\frac{W_u W_z}{a^2 r}\frac{\partial^2\psi}{\partial\varphi\partial z} + \left(1-\frac{W_r{}^2+W_z{}^2}{a^2}\right)\frac{\partial^2\psi}{\partial z^2} + \frac{N}{r}\frac{\partial\psi}{\partial\varphi} + M\frac{\partial\psi}{\partial z} = 0 \tag{59}$$

where

$$M = -\frac{\partial \ln b}{\partial z} + \frac{\partial s^*}{\partial z} + \frac{1}{a^2}\left(-\frac{\partial I}{\partial z} + \frac{a^2-W^2-W_r{}^2-W_z{}^2-\omega^2 r^2}{r}\lambda + W_z{}^2\lambda\frac{d\lambda}{dz}\right)$$

$$N = -\left(1+\lambda^2\right)\left[\frac{1}{r}\frac{\partial \ln b}{\partial\varphi} - \frac{1}{r}\frac{\partial s^*}{\partial\varphi} + \frac{1}{a^2}\frac{1}{r}\frac{\partial I}{\partial\varphi}\right] - \frac{a^2-W^2}{a^2}\left[\frac{2\omega\lambda}{W_z} + \frac{1}{W_z{}^2}\left(\frac{1}{r}\frac{\partial I}{\partial\varphi} - \frac{T}{r}\frac{\partial s}{\partial\varphi}\right)\right]$$

For this equation, the characteristics are real or imaginary when the resultant relative velocity W is supersonic or subsonic, respectively. For the subsonic case, it is again better to use the following form obtained by differentiating equations (55) and substituting the resulting equations into equation (56):

$$(1+\lambda^2)\ \frac{1}{r^2}\frac{\partial^2\psi}{\partial\varphi^2}+\frac{\partial^2\psi}{\partial z^2}+\frac{\lambda}{r}\frac{\partial\psi}{\partial z}-\left[(1+\lambda^2)\ \frac{1}{r^2}\frac{\partial\ \ln b\rho}{\partial\varphi}\frac{\partial\psi}{\partial\varphi}+\frac{\partial\ \ln b\rho}{\partial z}\ \frac{\partial\psi}{\partial z}\right]-2\lambda\omega b\rho-$$

$$\frac{(b\rho)^2}{\frac{1}{r}\frac{\partial\psi}{\partial\varphi}}\left(\frac{1}{r}\frac{\partial I}{\partial\varphi}-\frac{T}{r}\frac{\partial s}{\partial\varphi}\right)=0 \tag{59a}$$

With λ given and b determined from data obtained on the S_2 surface, there are now the six independent relations equations (21), (59) or (59a), (55a), (55b), (53), and (41a) for the determination of the six main variables in ψ, W_u, W_z, W_r, s, and I. The f-components are not involved in the calculation. If the flow is adiabatic with uniform I and s, the equations are further simplified.

Flow along Cylindrical Surface

If the flow near the walls of an axial-flow turbomachine can be considered to take place on a cylindrical surface, then

$$n_u = n_z = f_u = f_z = W_r = 0 \tag{60}$$

Equation (35) now gives

$$c = -\frac{\partial W_r}{\partial r} \tag{61}$$

which is relatively small. (If c is negligible, b can be taken as 1 everywhere.) For flow without change in radial distance, the quantity I can be replaced by $H_w\left(=h+\frac{W^2}{2}\right)$. The equations governing the cylindrical flow are then (compare reference 29)

$$\frac{\partial\psi}{\partial\varphi}=rb\rho W_z \tag{62a}$$

$$\frac{\partial\psi}{\partial z}=-b\rho W_u \tag{62b}$$

$$T\frac{Ds}{Dt}=Q \tag{63}$$

$$\frac{D\ H_w}{Dt}=T\frac{Ds}{Dt} \tag{64}$$

and

$$\left(1 - \frac{W_u^2}{a^2}\right)\frac{1}{r^2}\frac{\partial^2\psi}{\partial\varphi^2} - 2\frac{W_uW_z}{a^2}\frac{1}{r}\frac{\partial^2\psi}{\partial\varphi\partial z} + \left(1 - \frac{W_z^2}{a^2}\right)\frac{\partial^2\psi}{\partial z^2} + \frac{N}{r}\frac{\partial\psi}{\partial\varphi} + M\frac{\partial\psi}{\partial z} = 0 \tag{65}$$

where

$$M = -\frac{\partial \ln b}{\partial z} + \frac{\partial s^*}{\partial z} - \frac{1}{a^2}\frac{\partial H_w}{\partial z}$$

$$N = -\frac{1}{r}\frac{\partial \ln b}{\partial\varphi} + \frac{1}{r}\frac{\partial s^*}{\partial\varphi} + \frac{1}{a^2}\left[-\frac{a^2-W_u^2}{W_z^2}\frac{1}{r}\frac{\partial H_w}{\partial\varphi} + \frac{a^2-W^2}{W_z^2}\frac{T}{r}\frac{\partial s}{\partial\varphi}\right]$$

or

$$\frac{1}{r^2}\frac{\partial^2\psi}{\partial\varphi^2} + \frac{\partial^2\psi}{\partial z^2} - \left(\frac{1}{r^2}\frac{\partial \ln b\rho}{\partial\varphi}\frac{\partial\psi}{\partial\varphi} + \frac{\partial \ln b\rho}{\partial z}\frac{\partial\psi}{\partial z}\right) - \frac{(b\rho)^2}{\frac{1}{r}\frac{\partial\psi}{\partial\varphi}}\left(\frac{1}{r}\frac{\partial H_w}{\partial\varphi} - \frac{T}{r}\frac{\partial s}{\partial\varphi}\right) = 0 \tag{65a}$$

In general, the circumferential derivatives of H_w and s are to be determined by the inlet flow and equations (63) and (64). For adiabatic flow with uniform H_w and s upstream of the blade row, these derivatives are equal to zero everywhere, making the problem much simpler. The main difference between this simplified case and the ordinary two-dimensional flow on a cylindrical surface is the inclusion of the factor b in equations (62) and (65) (in general, b is a function of φ and z). If the velocity diagram is such that there is considerable radial gradient in the radial velocity or considerable variation of the distance between the adjacent streamlines, the factor b is not negligible.

EQUATIONS GOVERNING FLUID FLOW ON S_1 SURFACE FOR RADIAL-FLOW AND RADIAL-DISCHARGE MIXED-FLOW TURBOMACHINES

Flow along General S_1 Surface

For turbomachines with radial discharge, r and φ are considered as the two independent variables; that is,

$$q = q\left[r, \varphi, z(r,\varphi)\right]$$

Then

$$\left.\begin{aligned}
\frac{\partial q}{\partial r} &= \frac{\partial q}{\partial r} - \frac{n_r}{n_z}\frac{\partial q}{\partial z} \\
\frac{1}{r}\frac{\partial q}{\partial \varphi} &= \frac{1}{r}\frac{\partial q}{\partial \varphi} - \frac{n_u}{n_z}\frac{\partial q}{\partial z} \\
\frac{Dq}{Dt} &= W_r\frac{\partial q}{\partial r} + \frac{W_u}{r}\frac{\partial q}{\partial \varphi}
\end{aligned}\right\} \tag{66}$$

Equations of continuity and motion. - By the use of these relations, the equations of continuity and motion become

$$\frac{1}{r}\frac{\partial(\rho W_r r)}{\partial r} + \frac{1}{r}\frac{\partial(\rho W_u)}{\partial \varphi} = \rho c' \tag{67}$$

where

$$c' = -\frac{1}{n_z}\left(n_r\frac{\partial W_r}{\partial z} + n_u\frac{\partial W_u}{\partial z} + n_z\frac{\partial W_z}{\partial z}\right) \tag{68}$$

and

$$-\frac{W_u^2}{r} - W_u\frac{\partial W_u}{\partial r} + \frac{W_u}{r}\frac{\partial W_r}{\partial \varphi} - W_z\frac{\partial W_z}{\partial r} - 2\omega W_u = -\frac{\partial I}{\partial r} + T\frac{\partial s}{\partial r} + f_r' \tag{69a}$$

$$\frac{W_r W_u}{r} + W_r\frac{\partial W_u}{\partial r} - \frac{W_r}{r}\frac{\partial W_r}{\partial \varphi} - \frac{W_z}{r}\frac{\partial W_z}{\partial \varphi} + 2\omega W_r = -\frac{1}{r}\frac{\partial I}{\partial \varphi} + \frac{T}{r}\frac{\partial s}{\partial \varphi} + f_u' \tag{69b}$$

$$\frac{DW_z}{Dt} = W_r\frac{\partial W_z}{\partial r} + \frac{W_u}{r}\frac{\partial W_z}{\partial \varphi} = f_z' \tag{69c}$$

with

$$f' = -\frac{1}{n_z}\left(\frac{\partial h}{\partial z} - T\frac{\partial s}{\partial z}\right)n = -\frac{1}{n_z}\frac{1}{\rho}\frac{\partial p}{\partial z}\,n \tag{70}$$

Principal equation. - If a variable b' is introduced such that

$$\frac{D \ln b'}{Dt} = -c' \tag{71}$$

or

$$\ln \frac{b'}{b_i'} = -\int_{t_i}^{t} c' \, dx = -\int_{L_i}^{L} \frac{c'}{W} \, dx \tag{71a}$$

in which the integration is performed along a streamline on the surface, then the continuity equation (67) can be written

$$\frac{\partial(b'\rho W_r r)}{\partial r} + \frac{\partial(b'\rho W_u)}{\partial \varphi} = 0 \tag{72}$$

and a stream function ψ can be defined on the surface with

$$\frac{\partial \psi}{\partial r} = -b'\rho W_u \tag{73a}$$

$$\frac{\partial \psi}{\partial \varphi} = rb'\rho W_r \tag{73b}$$

Here b' can be interpreted as the thickness (in the z-direction) of the stream sheet whose mean surface is the S_1 surface considered. The continuity equation (72) can again be obtained by equating the mass flow into and out of an element of the stream sheet as defined by two axial planes $d\varphi$ angle apart and two cylindrical surfaces dr distance apart as shown in figure 7(b). As before, the difference of ψ at any two points on the S_1 surface is equal to the mass flow across any line connecting these two points. By the use of the preceding two equations and the relation

$$h = I + \frac{\omega^2 r^2}{2} - \frac{W_z^2}{2} - \frac{1}{2}(b'\rho)^{-2}\left[\left(\frac{\partial \psi}{\partial r}\right)^2 + \left(\frac{1}{r}\frac{\partial \psi}{\partial \varphi}\right)^2\right] \tag{74}$$

the principal equation for the flow of this surface is obtained from equation (39b):

$$\left(1 - \frac{W_r^2}{a^2}\right)\frac{\partial^2 \psi}{\partial r^2} - 2\frac{W_r W_u}{a^2}\frac{1}{r}\frac{\partial^2 \psi}{\partial r \partial \varphi} + \left(1 - \frac{W_u^2}{a^2}\right)\frac{1}{r^2}\frac{\partial^2 \psi}{\partial \varphi^2} + M\frac{\partial \psi}{\partial r} + \frac{N}{r}\frac{\partial \psi}{\partial \varphi} \tag{75}$$

where

$$M = -\frac{\partial \ln b'}{\partial r} + \frac{\partial s^*}{\partial r} + \frac{1}{a^2}\left[-\frac{\partial I}{\partial r} + W_z\frac{\partial W_z}{\partial r} + \frac{a^2 - (W_r^2 + W_u^2)}{r} - \frac{\omega^2 r^2 + W_r^2}{r}\right]$$

$$N = -\frac{1}{r}\frac{\partial \ln b'}{\partial\varphi} + \frac{1}{r}\frac{\partial s^*}{\partial\varphi} + \frac{1}{a^2 r}\left(-\frac{\partial I}{\partial\varphi} + W_z\frac{\partial W_z}{\partial\varphi}\right) +$$

$$\frac{a^2-(W_r{}^2+W_u{}^2)}{a^2 W_r{}^2}\left(-\frac{1}{r}\frac{\partial I}{\partial\varphi} + \frac{T}{r}\frac{\partial s}{\partial\varphi} + f_u' - 2\omega W_r + \frac{W_z}{r}\frac{\partial W_z}{\partial\varphi}\right)$$

This equation is seen to be hyperbolic or elliptic when $\sqrt{W_r{}^2+W_u{}^2}$ is greater or less than the speed of sound, respectively. For the elliptic case, it is preferable to use the following form:

$$\frac{\partial^2\psi}{\partial r^2} + \frac{1}{r^2}\frac{\partial^2\psi}{\partial\varphi^2} - \left(\frac{\partial \ln b'\rho}{\partial r}\frac{\partial\psi}{\partial r} + \frac{1}{r^2}\frac{\partial \ln b'\rho}{\partial\varphi}\frac{\partial\psi}{\partial\varphi}\right) +$$

$$\frac{(b'\rho)^2}{\frac{1}{r}\frac{\partial\psi}{\partial\varphi}}\left[-\frac{1}{r}\frac{\partial I}{\partial\varphi} + \frac{T}{r}\frac{\partial s}{\partial\varphi} + f_u' + \frac{W_z}{r}\frac{\partial W_z}{\partial\varphi} - W_r\left(\frac{W_u}{r} + 2\omega\right)\right] = 0 \qquad (75a)$$

The integrability condition (51) is now written

$$\frac{\partial}{\partial\varphi}\left(\frac{f_r}{f_z}\right) = \frac{\partial}{\partial r}\left(\frac{f_u r}{f_z}\right) \qquad (76)$$

hence

$$\frac{f_u r}{f_z} = \left(\frac{f_u r}{f_z}\right)_{r=r_o} + \int_{r_o}^{r}\frac{\partial}{\partial\varphi}\left(\frac{f_r}{f_z}\right)dx \qquad (76a)$$

The procedure of solving the principal equation with the various terms in it determined by other flow equations is the same as that in the previous system.

Flow along a Surface of Revolution

For the special case of flow on a surface of revolution, equations (52) and (53) hold (with λ considered as a function of r) and the expression of c' reduces to

$$c' = \frac{1}{\lambda}\frac{\partial W_r}{\partial z} - \frac{\partial W_z}{\partial z} \qquad (77)$$

Furthermore, equations (73) become

$$\frac{\partial\psi}{\partial r} = -b'\rho W_u \tag{78a}$$

$$\frac{\partial\psi}{\partial\varphi} = rb'\rho W_r \tag{78b}$$

and equation (69b) becomes

$$\left(1 + \frac{1}{\lambda^2}\right)\frac{1}{r}\frac{\partial W_r}{\partial\varphi} - \frac{\partial W_u}{\partial r} - \left(\frac{W_u}{r} + 2\omega\right) - \frac{1}{W_r}\left(\frac{1}{r}\frac{\partial I}{\partial\varphi} - \frac{T}{r}\frac{\partial s}{\partial\varphi}\right) = 0 \tag{79}$$

Using the relation

$$h = I + \frac{\omega^2 r^2}{2} - \frac{1}{2}(b'\rho)^{-2}\left[\left(\frac{\partial\psi}{\partial r}\right)^2 + \left(1 + \frac{1}{\lambda^2}\right)\left(\frac{1}{r}\frac{\partial\psi}{\partial\varphi}\right)^2\right] \tag{80}$$

gives the corresponding principal equation as

$$\left(1 - \frac{W_r^2 + W_z^2}{a^2}\right)\frac{\partial^2\psi}{\partial r^2} - 2\left(1 + \frac{1}{\lambda^2}\right)\frac{W_r W_u}{a^2 r}\frac{\partial^2\psi}{\partial r\partial\varphi} + \left(1 + \frac{1}{\lambda^2}\right)\left(1 - \frac{W_u^2}{a^2}\right)\frac{1}{r^2}\frac{\partial^2\psi}{\partial\varphi^2} + M\frac{\partial\psi}{\partial r} + \frac{N}{r}\frac{\partial\psi}{\partial\varphi} = 0 \tag{81}$$

where

$$M = -\frac{\partial \ln b'}{\partial r} + \frac{\partial s^*}{\partial r} + \frac{1}{a^2}\left(-\frac{\partial I}{\partial r} + \frac{a^2 - W^2 - W_r^2 - W_z^2 - \omega^2 r^2}{r} - \frac{W_z^2}{\lambda}\frac{d\lambda}{dr}\right)$$

$$N = -\left(1 + \frac{1}{\lambda^2}\right)\left(\frac{1}{r}\frac{\partial \ln b'}{\partial\varphi} - \frac{1}{r}\frac{\partial s^*}{\partial\varphi} + \frac{1}{a^2 r}\frac{\partial I}{\partial\varphi}\right) - \frac{a^2 - W^2}{a^2}\left[\frac{2\omega}{W_r} + \frac{1}{W_r^2 r}\left(\frac{\partial I}{\partial\varphi} - T\frac{\partial s}{\partial\varphi}\right)\right]$$

or

$$\frac{\partial^2\psi}{\partial r^2} + \frac{1}{r}\frac{\partial\psi}{\partial r} + \left(1 + \frac{1}{\lambda^2}\right)\frac{1}{r^2}\frac{\partial^2\psi}{\partial\varphi^2} - \left[\frac{\partial \ln b'\rho}{\partial r}\frac{\partial\psi}{\partial r} + \left(1 + \frac{1}{\lambda^2}\right)\frac{1}{r^2}\frac{\partial \ln b'\rho}{\partial\varphi}\frac{\partial\psi}{\partial\varphi}\right] -$$

$$2\omega b'\rho - \frac{(b'\rho)^2}{\frac{1}{r}\frac{\partial\psi}{\partial\varphi}}\left(\frac{1}{r}\frac{\partial I}{\partial\varphi} - \frac{T}{r}\frac{\partial s}{\partial\varphi}\right) = 0 \tag{81a}$$

Flow on Radial Plane

For the special case of flow on a radial plane,

$$n_r = n_u = f_r = f_u = W_z = 0 \tag{82}$$

and equations (77) to (81) reduce to

$$c' = -\frac{\partial W_z}{\partial z} \tag{83}$$

$$\frac{\partial \psi}{\partial r} = -b'\rho W_u \tag{84a}$$

$$\frac{\partial \psi}{\partial \varphi} = rb'\rho W_r \tag{84b}$$

$$h = I + \frac{1}{2}\omega^2 r^2 - \left[\left(\frac{1}{r}\frac{\partial \psi}{\partial \varphi}\right)^2 + \left(\frac{\partial \psi}{\partial r}\right)^2\right] \tag{85}$$

$$\left(1 - \frac{W_r^2}{a^2}\right)\frac{\partial^2 \psi}{\partial r^2} - 2\frac{W_r W_u}{a^2 r}\frac{\partial^2 \psi}{\partial r \partial \varphi} + \left(1 - \frac{W_u^2}{a^2}\right)\frac{1}{r^2}\frac{\partial^2 \psi}{\partial \varphi^2} + M\frac{\partial \psi}{\partial r} + \frac{N}{r}\frac{\partial \psi}{\partial \varphi} = 0 \tag{86}$$

where

$$M = -\frac{\partial \ln b'}{\partial r} + \frac{\partial s^*}{\partial r} + \frac{1}{a^2} - \frac{\partial I}{\partial r} + \left(\frac{a^2 - W^2 - W_r^2 - \omega^2 r^2}{r}\right)$$

$$N = -\frac{1}{r}\frac{\partial \ln b'}{\partial \varphi} + \frac{1}{r}\frac{\partial s^*}{\partial \varphi} + \frac{1}{a^2 r}\left(-\frac{a^2 - W_u^2}{W_r^2}\frac{\partial I}{\partial \varphi} + \frac{a^2 - W^2}{W_r^2} T \frac{\partial s}{\partial \varphi}\right) - \frac{a^2 - W^2}{a^2}\frac{2\omega}{W_r}$$

and

$$\frac{\partial^2 \psi}{\partial r^2} + \frac{1}{r}\frac{\partial \psi}{\partial r} + \frac{1}{r^2}\frac{\partial^2 \psi}{\partial \varphi^2} - \left(\frac{\partial \ln b'\rho}{\partial r}\frac{\partial \psi}{\partial r} + \frac{1}{r^2}\frac{\partial \ln b'\rho}{\partial \varphi}\frac{\partial \psi}{\partial \varphi}\right) - 2\omega b'\rho -$$

$$\frac{(b'\rho)^2}{\frac{1}{r}\frac{\partial \psi}{\partial \varphi}}\left(\frac{1}{r}\frac{\partial I}{\partial \varphi} - \frac{T}{r}\frac{\partial s}{\partial \varphi}\right) = 0 \tag{86a}$$

Alternative Form of Equations for Flow along Surface of Revolution

The equations given in the preceding sections are obtained for turbomachines to avoid an infinite value of the partial derivative with respect to z. Difficulty still exists in using either of the systems in the case of a mixed-flow type machine with an axial inflow and a radial outflow. For solutions of general S_1 surfaces, this difficulty can be avoided by dividing the machine at the middle of the flow path and using the first system at the inlet portion and the second system at the exit portion. If the S_1 surface can be approximated by a surface of revolution, it is convenient to use a set of orthogonal coordinates l and φ, where l is the arc length of the generating line of the surface of revolution in the meridional plane and φ is the usual cylindrical angle (fig. 8). Because

$$\frac{W_r}{W_l} = \frac{dr}{dl} = \sin \sigma \tag{87}$$

and

$$\frac{W_z}{W_l} = \frac{dz}{dl} = \cos \sigma \tag{88}$$

then, for use with the first system,

$$\frac{\partial q}{\partial z} = \sec \sigma \frac{\partial q}{\partial l} \tag{89}$$

and, for use with the second system,

$$\frac{\partial q}{\partial r} = \csc \sigma \frac{\partial q}{\partial l} \tag{90}$$

By use of the preceding relations, the equation of motion in the circumferential direction as given by either equation (56) or (79) for the two systems, respectively, becomes in both cases

$$\frac{1}{r}\frac{\partial W_l}{\partial \varphi} - \frac{\partial W_u}{\partial l} - \left(\frac{W_u}{r} + 2\omega\right) \sin \sigma - \frac{1}{W_l}\left(\frac{1}{r}\frac{\partial I}{\partial \varphi} - \frac{T}{r}\frac{\partial s}{\partial \varphi}\right) = 0 \tag{79a}$$

which agrees with the results obtained in references 29 and 30 in a different manner. The subsequent equations given in these two references can be modified and used for such surfaces. (The last term on the left side of equation (79a) represents the rotationality of the absolute flow and is not included in reference 29, which is derived for irrotational absolute flow.)

By comparing the integrating factor b used herein and the thickness of the stream filament of revolution τ used in these two references, it is seen that the two play exactly the same role in the continuity relation. Although b is obtained mathematically as an integrating factor, physically it may then be visualized as the thickness of the stream filament in the r or z-direction for the two systems, respectively. The use of b herein is, of course, more general in that it varies two-dimensionally over the surface in the general case, where, as in references 29 and 30, τ is considered a function of l only.

EQUATIONS GOVERNING FLUID FLOW ON S_2 SURFACES

In the preceding section, it was shown that the determination of the flow on S_1 surfaces requires a knowledge of the radial variation of the velocity components. This knowledge can be obtained by following the fluid motion along relative stream surfaces of the second kind, S_2. On S_2, the relations (28) to (31) also hold. These relations, however, will now be used to eliminate the independent variable φ; that is, any quantity q on S_2 is now considered as

$$q = q\left[r,z,\varphi(r,z)\right]$$

Accordingly, on S_2

$$\left.\begin{aligned} \frac{\partial q}{\partial r} &= \frac{\partial q}{\partial r} - \frac{n_r}{n_u}\frac{1}{r}\frac{\partial q}{\partial \varphi} \\ \frac{\partial q}{\partial z} &= \frac{\partial q}{\partial z} - \frac{n_z}{n_u}\frac{1}{r}\frac{\partial q}{\partial \varphi} \end{aligned}\right\} \tag{91}$$

and along a streamline on S_2

$$\frac{Dq}{Dt} = W_r\frac{\partial q}{\partial r} + W_z\frac{\partial q}{\partial z} \tag{92}$$

Equations of Continuity and Motion

Equations (30) and (91) are used to change the continuity equation (35) to

$$\frac{1}{r}\frac{\partial(\rho W_r r)}{\partial r} + \frac{\partial(\rho W_z)}{\partial z} = \rho\, C(r,z) \tag{93}$$

where

$$C(r,z) = -\frac{1}{n_u r}\left(n_r \frac{\partial W_r}{\partial \varphi} + n_u \frac{\partial W_u}{\partial \varphi} + n_z \frac{\partial W_z}{\partial \varphi}\right) \tag{94}$$

For general rotational motion, the equations of motion (14a) in the three perpendicular directions are

$$\left.\begin{aligned}
-\frac{W_u}{r}\left[\frac{\partial(V_u r)}{\partial r} - \frac{\partial W_r}{\partial \varphi}\right] + W_z\left(\frac{\partial W_r}{\partial z} - \frac{\partial W_z}{\partial r}\right) &= -\frac{\partial I}{\partial r} + T\frac{\partial s}{\partial r} \\
\frac{W_r}{r}\left[\frac{\partial(V_u r)}{\partial r} - \frac{\partial W_r}{\partial \varphi}\right] - W_z\left(\frac{1}{r}\frac{\partial W_z}{\partial \varphi} - \frac{\partial W_u}{\partial z}\right) &= -\frac{1}{r}\frac{\partial I}{\partial \varphi} + \frac{T}{r}\frac{\partial s}{\partial \varphi} \\
-W_r\left(\frac{\partial W_r}{\partial z} - \frac{\partial W_z}{\partial r}\right) + W_u\left(\frac{1}{r}\frac{\partial W_z}{\partial \varphi} - \frac{\partial W_u}{\partial z}\right) &= -\frac{\partial I}{\partial z} + T\frac{\partial s}{\partial z}
\end{aligned}\right\} \tag{95}$$

In following the motion on S_2, equations (95) are reduced to the following form by using equations (9), (16), (31), and (91):

$$-\frac{W_u}{r}\frac{\partial(V_u r)}{\partial r} + W_z\left(\frac{\partial W_r}{\partial z} - \frac{\partial W_z}{\partial r}\right) = -\frac{\partial I}{\partial r} + T\frac{\partial s}{\partial r} + F_r \tag{96a}$$

$$\frac{W_r}{r}\frac{\partial(V_u r)}{\partial r} + \frac{W_z}{r}\frac{\partial(V_u r)}{\partial z} = F_u \quad \left[\text{or} \quad F_u r = \frac{D(V_u r)}{Dt}\right] \tag{96b}$$

$$-W_r\left(\frac{\partial W_r}{\partial z} - \frac{\partial W_z}{\partial r}\right) - \frac{W_u}{r}\frac{\partial(V_u r)}{\partial z} = -\frac{\partial I}{\partial z} + T\frac{\partial s}{\partial z} + F_z \tag{96c}$$

where F is a vector having the unit of force per unit mass of gas defined by:

$$F = -\frac{1}{n_u r}\left(\frac{\partial h}{\partial \varphi} - T\frac{\partial s}{\partial \varphi}\right)n = -\frac{1}{n_u r}\frac{1}{\rho}\frac{\partial p}{\partial \varphi}\, n \tag{97}$$

A similar result is obtained for the equation of motion in the form of (2):

$$\left.\begin{aligned}
W_r\frac{\partial W_r}{\partial r} + W_z\frac{\partial W_r}{\partial z} - \frac{V_u^2}{r} &= -\frac{1}{\rho}\frac{\partial p}{\partial r} + F_r \\
\frac{W_r}{r}\frac{\partial(V_u r)}{\partial r} + \frac{W_z}{r}\frac{\partial(V_u r)}{\partial z} &= F_u \\
W_z\frac{\partial W_z}{\partial z} + W_r\frac{\partial W_z}{\partial r} &= -\frac{1}{\rho}\frac{\partial p}{\partial z} + F_z
\end{aligned}\right\} \tag{98}$$

Because the vector F is normal to the S_2 surface,

$$F_r W_r + F_u W_u + F_z W_z = 0 \tag{99}$$

By the use of equations (99) and (96), it can be shown for steady flow on an S_2 surface that

$$\frac{DI}{Dt} = T \frac{Ds}{Dt} \tag{99a}$$

This result is the same as that obtained for the S_1 surface. Again, for the present problem of steady relative flow on the S_2 surface, the relation (99a) can be taken either as one of the equations of motion or to represent the relation (99). In other words, there are only four independent relations among equations (96a), (96b), (96c), (99), and (99a). In the following development, it is found convenient to use equations of motion in the form of equation (96), not only because $\partial I/\partial r$ is zero in many design problems (whereas $\partial p/\partial r \neq 0$), but also because equation (96) leads to a form capable of a rigorous solution for both subsonic and supersonic flow and shows clearly how the various design factors affect the three-dimensional motion in general. (See equations (106) to (114) that follow.)

In a manner analogous to the S_1 surface, the continuity equation (93) is put into the form

$$\frac{\partial(rB\rho W_r)}{\partial r} + \frac{\partial(rB\rho W_z)}{\partial z} = 0 \tag{100}$$

by the use of an integrating factor B, which is related to C by the following equation:

$$\frac{D \ln B}{Dt} = W_r \frac{\partial \ln B}{\partial r} + W_z \frac{\partial \ln B}{\partial z} = C \tag{101}$$

or

$$\ln \frac{B}{B_i} = \int_{t_i}^{t} C \, dx = \int_{L_i}^{L} \frac{C}{W} \, dx \tag{101a}$$

Equation (100) is the necessary and sufficient condition that a stream function ψ exist and

$$\frac{\partial \psi}{\partial r} = rB\rho W_z \tag{102a}$$

$$\frac{\partial\psi}{\partial z} = - rB\rho W_r \tag{102b}$$

The difference in Ψ at two points j and k on the S_2 surface is

$$\Psi^k - \Psi^j = \int_j^k d\psi = \int_j^k rB\rho(W_z\ dr - W_r\ dz)$$

Similar to the flow on the S_1 surface, the preceding equation indicates that B is proportional to the angular thickness of a thin stream sheet whose mean surface is the stream surface S_2 considered herein and whose variable circumferential thickness is equal to rB. Indeed, if the mass flow into and out of the element of such a stream sheet (cut between two planes normal to the z-axis, and a distance dz apart and between two cylindrical surfaces dr apart (fig. 7(c))) is equated to zero and the distances dr and dz approach zero as a limit, the following equation is obtained:

$$\frac{\partial(\tau\rho W_r)}{\partial r} + \frac{\partial(\tau\rho W_z)}{\partial z} = 0 \tag{100a}$$

Comparing this equation with equation (100) and considering the mass flow relations show τ to be proportional to rB. This proportionality means that B can be physically intepreted as a quantity which is proportional to the angular thickness of a stream sheet whose mean surface is the S_2 surface considered herein. With this interpretation, B is immediately seen to be closely related to the angular distance between two neighboring blades. In actual calculation, only the ratio rB to $(rB)_i$ or τ to τ_i is important, and it is also easier to obtain the variation in rB from the distance between adjacent streamlines obtained on S_1 surfaces than to evaluate B/B_i by equations (101a) and (94) using data obtained on S_1 surfaces.

Principal Equation for Case with $V_u r$ Given

In the solution of flow on an S_2 surface, the continuity equations and the equation of motion in the radial direction are combined to form the principal equation. The principal equation will now be obtained for two main groups of present designs in which a certain desirable variation of the angular momentum of the fluid $V_u r$ and of the ratio of relative tangential and axial velocity are prescribed on the $S_{2,m}$ surface, respectively. These equations can also be used for the solution of a direct problem, in which the same information obtained on S_1 solutions of a previous cycle is used as known values in the S_2 solution.

For the first group, the following equation is considered known:

$$V_u r = G(r,z) \tag{103}$$

Among this group of designs are the free-vortex design (in which G is simply a function of z), the more general "solid-body rotation" design, the "symmetrical velocity diagram at all radii" design, and others (for example, see references 17 and 18).

From equations (102) and (45),

$$rB\rho \frac{\partial W_z}{\partial r} = \frac{\partial^2 \Psi}{\partial r^2} + \left(-\frac{1}{r} - \frac{1}{a^2}\frac{\partial h}{\partial r} + \frac{\partial s^*}{\partial r} - \frac{\partial \ln B}{\partial r}\right)\frac{\partial \Psi}{\partial r} \tag{104a}$$

$$-rB\rho \frac{\partial W_r}{\partial z} = \frac{\partial^2 \Psi}{\partial z^2} + \left(-\frac{1}{a^2}\frac{\partial h}{\partial z} + \frac{\partial s^*}{\partial z} - \frac{\partial \ln B}{\partial z}\right)\frac{\partial \Psi}{\partial z} \tag{104b}$$

But from equations (9) and (101),

$$h = I + \frac{\omega^2 r^2}{2} - \frac{W_u^2}{2} - \frac{1}{2}(rB\rho)^{-2}\left[\left(\frac{\partial \Psi}{\partial r}\right)^2 + \left(\frac{\partial \Psi}{\partial z}\right)^2\right] \tag{105}$$

Differentiating with respect to r and z gives

$$\frac{a^2-(W_r^2+W_z^2)}{a^2}\frac{\partial h}{\partial r} = \frac{\partial}{\partial r}\left(I + \frac{\omega^2 r^2 - W_u^2}{2}\right) + (W_r^2+W_z^2)\left(\frac{1}{r} + \frac{\partial \ln B}{\partial r} - \frac{\partial s^*}{\partial r}\right) - (rB\rho)^{-1}\left(W_z \frac{\partial^2 \Psi}{\partial r^2} - W_r \frac{\partial^2 \Psi}{\partial r \partial z}\right)$$

$$\frac{a^2-(W_r^2+W_z^2)}{a^2}\frac{\partial h}{\partial z} = \frac{\partial}{\partial z}\left(I + \frac{\omega^2 r^2 - W_u^2}{2}\right) + (W_r^2+W_z^2)\left(\frac{\partial \ln B}{\partial z} - \frac{\partial s^*}{\partial z}\right) - (rB\rho)^{-1}\left(W_z \frac{\partial^2 \Psi}{\partial r \partial z} - W_r \frac{\partial^2 \Psi}{\partial z^2}\right)$$

Substituting the preceding equations into equations (104) and adding give

$$\left[a^2 - \left(W_r^2+W_z^2\right)\right] rB\rho\left(\frac{\partial W_z}{\partial r} - \frac{\partial W_r}{\partial z}\right) = \left(a^2 - W_r^2\right)\frac{\partial^2 \Psi}{\partial r^2} - 2 W_r W_z \frac{\partial^2 \Psi}{\partial r \partial z} + \left(a^2 - W_z^2\right)\frac{\partial^2 \Psi}{\partial z^2} + \left[-\frac{a^2}{r} - \frac{\partial}{\partial r}\left(I - \frac{W_u^2 - \omega^2 r^2}{2}\right) - a^2\left(\frac{\partial \ln B}{\partial r} - \frac{\partial s^*}{\partial r}\right)\right]\frac{\partial \Psi}{\partial r} + \left[-\frac{\partial}{\partial z}\left(I - \frac{W_u^2 - \omega^2 r^2}{2}\right) - a^2\left(\frac{\partial \ln B}{\partial z} - \frac{\partial s^*}{\partial z}\right)\right]\frac{\partial \Psi}{\partial z} \tag{106}$$

Substituting equation (106) into equation (96a) and dividing by a^2 yield the following principal equation for the fluid flow on surface S_2:

$$\left(1 - \frac{W_r^2}{a^2}\right)\frac{\partial^2\Psi}{\partial r^2} - 2\frac{W_r W_z}{a^2}\frac{\partial^2\Psi}{\partial r\partial z} + \left(1 - \frac{W_z^2}{a^2}\right)\frac{\partial^2\Psi}{\partial z^2} + N\frac{\partial\Psi}{\partial r} + M\frac{\partial\Psi}{\partial z} = 0 \tag{107}$$

where

$$M = -\frac{\partial \ln B}{\partial z} + \frac{\partial s^*}{\partial z} - \frac{1}{a^2}\left(\frac{\partial I}{\partial z} - W_u\frac{\partial W_u}{\partial z}\right)$$

$$N = -\frac{1}{r} - \frac{\partial \ln B}{\partial r} + \frac{\partial s^*}{\partial r} - \frac{1}{a^2}\left(\frac{\partial I}{\partial r} - W_u\frac{\partial W_u}{\partial r} + \omega^2 r\right) + \frac{a^2-(W_r^2+W_z^2)}{a^2 W_z^2}\left[-\frac{\partial I}{\partial r} + T\frac{\partial s}{\partial r} + F_r + \frac{W_u}{r}\frac{\partial(V_u r)}{\partial r}\right]$$

From the coefficients of the second derivatives, the principal equation is seen to be hyperbolic or elliptic when the meridional velocity $W_l = \sqrt{W_r^2 + W_z^2}$ is greater or less than the speed of sound, respectively. For the elliptic case, it is again convenient to write the principal equation in a slightly different form. From equation (101),

$$\left.\begin{aligned} rB\rho\frac{\partial W_z}{\partial r} &= \frac{\partial^2\Psi}{\partial r^2} - \frac{1}{r}\frac{\partial\Psi}{\partial r} - \frac{\partial \ln B\rho}{\partial r}\frac{\partial\Psi}{\partial r} \\ -rB\rho\frac{\partial W_r}{\partial z} &= \frac{\partial^2\Psi}{\partial z^2} - \frac{\partial \ln B\rho}{\partial z}\frac{\partial\Psi}{\partial z} \end{aligned}\right\} \tag{108}$$

Substituting into equation (96a) results in

$$\frac{\partial^2\Psi}{\partial r^2} - \frac{1}{r}\frac{\partial\Psi}{\partial r} + \frac{\partial^2\Psi}{\partial z^2} - \left(\frac{\partial \ln B\rho}{\partial r}\frac{\partial\Psi}{\partial r} + \frac{\partial \ln B\rho}{\partial z}\frac{\partial\Psi}{\partial z}\right) + \frac{(rB\rho)^2}{\frac{\partial\Psi}{\partial r}}\left[\frac{W_u}{r}\frac{\partial(V_u r)}{\partial r} - \frac{\partial I}{\partial r} + T\frac{\partial s}{\partial r} + F_r\right] = 0 \tag{107a}$$

With the variation of V_u or W_u prescribed by the designer in an inverse problem or taken from the previous S_1 calculation in a direct problem, the meridional velocity components are determined by equations (107) and (107a). (Other equations are used to determine various terms involved in the coefficients M and N.)

Principal Equation for Case with W_u/W_z Given

In the second group of designs, the following relation is prescribed on an $S_{2,m}$ surface (for example, see references 17 and 18):

$$\frac{W_u}{W_z} = g(r,z) \tag{109}$$

In order to result in blades with the mean blade surface composed of all radial elements (for high-speed rotation), it may be desirable to specify a mean S_2 surface consisting of all radial elements. Then

$$\frac{W_u}{W_z} = r\ g_1(z) \tag{110}$$

Similarly, in order to obtain a cooled turbine rotor blade with minimum twist, the following function may be specified on $S_{2,m}$:

$$\frac{W_u}{W_z} = g_2(z) \tag{111}$$

In application to direct problems, one of the preceding relations is obtained from the S_1 solution in the previous cycle and is considered as given in the S_2 solution. In both inverse and direct problems, with the relation between W_u and W_z given by these equations, all three velocity components are to be combined into the main terms of the principal equation as follows: Substituting relation (109) into equation (96a) gives

$$(1+g^2)\frac{\partial W_z}{\partial r} - \frac{\partial W_r}{\partial z} + g\left(\frac{g}{r} + \frac{\partial g}{\partial r}\right)W_z + 2\omega g + \frac{1}{W_z}\left(-\frac{\partial I}{\partial r} + T\frac{\partial s}{\partial r} + F_r\right) = 0 \tag{112}$$

Instead of equation (105),

$$h = I + \frac{\omega^2 r^2}{2} - \frac{1}{2}(rB\rho)^{-2}\left[(1+g^2)\left(\frac{\partial\Psi}{\partial r}\right)^2 + \left(\frac{\partial\Psi}{\partial z}\right)^2\right] \tag{113}$$

should now be written. Differentiating with respect to r and z, combining with equation (104), and substituting into equation (112) give the following form of the principal equation:

$$(1+g^2)\left(1-\frac{W_r^2}{a^2}\right)\frac{\partial^2\Psi}{\partial r^2}-2(1+g^2)\frac{W_rW_z}{a^2}\frac{\partial^2\Psi}{\partial r\partial z}+\left(1-\frac{W_u^2+W_z^2}{a^2}\right)\frac{\partial^2\Psi}{\partial z^2}+N\frac{\partial\Psi}{\partial r}+M\frac{\partial\Psi}{\partial z}=0 \tag{114}$$

where

$$M=-\frac{\partial \ln B}{\partial z}+\frac{\partial s^*}{\partial z}-\frac{1}{a^2}\left(\frac{\partial I}{\partial z}-\frac{W_z^2}{a^2}g\frac{\partial g}{\partial z}\right)$$

$$N=-(1+g^2)\left[\frac{1}{r}+\frac{\partial \ln B}{\partial r}-\frac{\partial s^*}{\partial r}+\frac{1}{a^2}\left(\frac{\partial I}{\partial r}+\omega^2 r-W_z^2 g\frac{\partial g}{\partial r}\right)\right]+$$

$$\frac{a^2-W^2}{a^2}g\left(\frac{g}{r}+\frac{\partial g}{\partial r}\right)+\frac{a^2-W^2}{a^2W_z^2}\left(-\frac{\partial I}{\partial r}+T\frac{\partial s}{\partial r}+F_r+2\omega W_u\right)$$

This equation is hyperbolic when the relative velocity is supersonic, elliptic when the relative velocity is subsonic. For the subsonic case, a form of this equation more convenient for computation is obtained by substituting equation (108) into (112):

$$(1+g^2)\frac{\partial^2\Psi}{\partial r^2}-\left(\frac{1}{r}-g\frac{\partial g}{\partial r}\right)\frac{\partial\Psi}{\partial r}+\frac{\partial^2\Psi}{\partial z^2}-\left[(1+g^2)\frac{\partial \ln B\rho}{\partial r}\frac{\partial\Psi}{\partial r}+\frac{\partial \ln B\rho}{\partial z}\frac{\partial\Psi}{\partial z}\right]+$$

$$2g\omega rB\rho+\frac{(rB\rho)^2}{\frac{\partial\Psi}{\partial r}}\left(-\frac{\partial I}{\partial r}+T\frac{\partial s}{\partial r}+F_r\right)=0 \tag{114a}$$

It may be noted that for both groups, equation (96a) rather than (96c) is chosen to obtain the principal equation of the present problem, because F_r is always much smaller than F_z in axial machines and F_r is zero or nearly zero on S_2 surfaces for high-speed centrifugal and mixed-flow impellers whose mean blade surfaces are usually composed of all radial elements. (For low-speed centrifugal impellers, equation (96c) can be used to form the principal equation in a similar manner.)

Procedure of Solution

Although the equation of motion (96a) is chosen to form the principal equation, other equations are to be used to obtain the various terms involved in the principal equation. As in the case of general S_1 surfaces, there are ten basic variables to define the flow and the shape of the S_2 surface. They are: Ψ, B, W_r, W_u, W_z, F_r, F_u, F_z, s, and I (or ρ). B is considered given. (In the direct problem, B is evaluated directly from the distances between adjacent streamlines or according to equation (100a) using the value of C obtained on S_1 surfaces; in the inverse or design problem, B is estimated (references 29 and 35) from the blade thickness as desired from blade stress and other considerations.) On the other hand, there are seven independent relations in one energy equation (21); three equations of motion, one of equations (107), (107a), (114), or (114a), and equations (96b) and (96c); the orthogonality relation between W and F, equation (99a); and the two equations relating Ψ and velocity, (102a) and (102b).

Direct problem. - In the direct problem, two alternative procedures may be used. If the shape of the S_2 surface (determined from the data obtained on S_1 surfaces) is considered as given in the present S_2 solution, two additional relations between the n- or F-components completely define the problem. The procedure of calculation is as follows:

(1) Use equations (20) and (21) to determine the variation of s and I.

(2) Compute W_u from the orthogonality relation as follows:

$$W_u = -\left(\frac{n_r}{n_u} W_r + \frac{n_z}{n_u} W_z\right)$$

(3) Compute F_u from equation (96b).

(4) Solve the principal equation.

(5) Obtain W_r and W_z from equations (102).

If only the tangential velocity or the relation (109) is taken from the S_1 solutions of the previous cycle and is considered as given in the present S_2 solution, one more relation is available between the F-components such as that which exists between the f-components on the S_1 surface:

$$F \cdot \nabla \times F = 0 \tag{115}$$

Writing equation (115) in scalar form and using the relations (31) and (91) give

$$\frac{\partial}{\partial r}\left(\frac{F_z}{F_u r}\right) = \frac{\partial}{\partial z}\left(\frac{F_r}{F_u r}\right) \tag{115a}$$

By integrating along a constant z-line, equation (115a) provides the following relation to determine the value of F_r to be used in the principal equation from the values of F_u and F_z:

$$\frac{F_r}{F_u r} = \left(\frac{F_r}{F_u r}\right)_o + \int_{z_o}^{z} \frac{\partial}{\partial r}\left(\frac{F_z}{F_u r}\right) dz \tag{115b}$$

If $F_r = 0$, at z_o

$$F_r = F_u r \int_{z_o}^{z} \frac{\partial}{\partial r}\left(\frac{F_z}{F_u r}\right) dz \tag{115c}$$

The procedure of calculation is as follows:

(1) Use equations (21) and (99a) to determine the variation of s and I.

(2) Compute F_u and F_z from equations (96b) and (96c).

(3) Compute F_r from equation (115b) or (115c).

(4) Solve Ψ from the principal equation.

(5) Compute W_r and W_z from equations (102a) and (102b).

Inverse problem. - In the inverse or design problem of a finite number of thick blades, in addition to the blade-thickness distribution or its equivalent B, either equation (103) or (109) is prescribed on a mean stream surface $S_{2,m}$. It may appear that still another relation can be prescribed on the mean surface. The differentials of the coordinates of the surface are now governed by

$$F_r\, dr + F_u r\, d\varphi + F_z\, dz = 0 \tag{116}$$

however, and, in order that this differential equation will lead to an integral surface of the form represented by equation (28), F must satisfy the condition of integrability as given by equation (115) (reference 34). An expression similar to equation (115a) for the case of an infinite number of blades was first pointed out by Bauersfeld (reference 2) in a discussion of the Lorenz paper (reference 1). In effect, it restricts the freedom that the designer has in prescribing the velocity components of the fluid on the surface. Hence, in the inverse problem of a finite number of thick blades, in addition to the blade thickness distribution or its equivalent B, the designer can specify only one relation on the mean stream surface, which relation may be either the tangential velocity as given by equation (103), the flow angle between the tangential and axial velocity as given by equation (109), the axial velocity, or any other reasonable relation that will lead to a solution of the set of equations.

In the preceding consideration, the hub and casing shapes are also prescribed by the designer in the inverse problem. Alternatively, the prescription of the hub shape can be replaced by a prescription of another relation at the casing, thereby fixing the shape of and the flow along $S_{2,m}$ at the casing entirely. The flow is then extended to the hub and the last streamline gives the hub contour (reference 19).

Approximations Involved in Through-Flow Theory

When the equations previously derived in reference 18 for a large number of thin blades are compared with the corresponding equations derived herein along a stream surface, the two are obviously exactly the same if the ordinary derivatives used in reference 18 are replaced by the present partial derivatives following the stream surface, and if B is equal to 1 or if the variation of B along the flow path is zero. In the interpretation of the through-flow solutions as the flow along a mean stream surface (which divides mass flow into two equal parts circumferentially) or as the flow along the mean channel surface (geometrical mean), the first difference can easily be removed by simply interpreting the values obtained in the solution as those along the surface rather than in the meridional plane. The second condition, however, is satisfied only when the circumferential variation of all the velocity components approaches zero, or when the circumferential derivative of the tangential velocity and the ratios of n_r and n_z to n_u approach zero (see equation (94)).

Besides the use as a limiting solution in general and to give certain trends where the contribution due to the finite number of blades is small or constant, the through-flow calculation should be properly modified by the factor B in its application to actual turbomachines

of a finite number of thick blades. As B can be physically interpreted as the ratio of the local angular thickness of the stream sheet to its inlet value, a good approximate value can be obtained by solving the two-dimensional flows on a number of stream surfaces of revolution starting at different radii at the inlet. For the subsonic flow in the turbine cascade reported in reference 29 and for the supersonic flow in two impulse bladings investigated in reference 30, the reductions in angular thickness from the inlet value along the mean streamline are seen to be a chordwise average of 4 and 9 percent more than the reduction in the channel width, respectively. Also, in the subsonic case, the influence is extended a certain distance outside the blade row. The inclusion of this factor B, even if it is approximate, should give a much closer answer than that obtained with B taken as 1.

In this interpretation of the infinite number of blades solution as the solution of through flow along a particular stream surface between two adjacent blades, the distributed "body force" F has a definite meaning, as given by equation (97). (For an infinite number of blades, F becomes the blade force.) For blades with large turning and large radial twist, as in a free-vortex turbine, the influence of the radial component of F on the flow is not negligible.

CIRCUMFERENTIAL VARIATION OF FLUID PROPERTIES BY USE OF POWER SERIES

In general, the blade-to-blade variations of fluid properties are to be obtained from calculations on S_1 surfaces. When the twist of the S_1 surface is large, some other method of obtaining the blade-to-blade information is desirable. For subsonic irrotational absolute flow, this information can be obtained by extending the solution obtained on the mean stream surface in the circumferential direction by the use of power series (without the consideration of the shape of the S_1 flow surfaces). The various derivatives involved in the series are obtained from the flow condition on the mean stream surface. The higher the solidity and the thinner the blade sections, the fewer are the terms required for a given accuracy. Results obtained in references 29 and 36 indicate that only three terms in the series will be required to give sufficient accuracy for high-solidity turbines and centrifugal compressors.

The series method will also be used in one of the two methods of the inverse solution in which the flow obtained on the mean stream surface is extended out circumferentially.

Denoting the absolute vorticity $\nabla \times V$ by ξ and using the relations (16), (91), and (97) in equations (19) give

$$\xi_r = \frac{1}{r}\left[\frac{\partial W_z}{\partial \varphi} - \frac{\partial(V_u r)}{\partial z}\right] = \frac{1}{r}\frac{\partial W_z}{\partial \varphi} - \frac{1}{r}\frac{\partial(V_u r)}{\partial z} - \frac{F_z}{F_u r}\frac{\partial W_u}{\partial \varphi} \tag{117a}$$

$$\xi_u = \frac{\partial W_r}{\partial z} - \frac{\partial W_z}{\partial r} = \frac{\partial W_r}{\partial z} - \frac{\partial W_z}{\partial r} + \frac{F_z}{F_u r}\frac{\partial W_r}{\partial \varphi} - \frac{F_r}{F_u r}\frac{\partial W_z}{\partial \varphi} \tag{117b}$$

$$\xi_z = \frac{1}{r}\left[\frac{\partial(V_u r)}{\partial r} - \frac{\partial W_r}{\partial \varphi}\right] = \frac{1}{r}\frac{\partial(V_u r)}{\partial r} + \frac{F_r}{F_u r}\frac{\partial W_u}{\partial \varphi} - \frac{1}{r}\frac{\partial W_r}{\partial \varphi} \tag{117c}$$

From the preceding equations,

$$\frac{\partial W_r}{\partial z} - \frac{\partial W_z}{\partial r} = \frac{F_r\xi_r + F_u\xi_u + F_z\xi_z}{F_u} - \frac{F_z}{F_u r}\frac{\partial(V_u r)}{\partial r} + \frac{F_r}{F_u r}\frac{\partial(V_u r)}{\partial z} \tag{118}$$

This equation means that the apparent vorticity, which is obtained by differentiating the velocity on the mean stream surface with respect to the coordinates, is not zero even if the absolute vorticity is zero or tangent to the mean stream surface. Substituting equations (117a) and (117c) into equation (94) results in

$$\frac{1}{r}\frac{\partial W_u}{\partial \varphi} = -\frac{F_u^2}{F^2}\left[\frac{F_r}{F_u r}\frac{\partial(V_u r)}{\partial r} + \frac{F_z}{F_u r}\frac{\partial(V_u r)}{\partial z} + C + \frac{F_z}{F_u}\xi_r - \frac{F_r}{F_u}\xi_z\right] \tag{119}$$

Substituting equation (119) into equations (117a) and (117c) gives

$$\frac{1}{r}\frac{\partial W_z}{\partial \varphi} = \frac{1}{r}\frac{\partial(V_u r)}{\partial z} + \xi_r - \frac{F_u F_z}{F^2}\left[\frac{F_r}{F_u r}\frac{\partial(V_u r)}{\partial r} + \frac{F_z}{F_u r}\frac{\partial(V_u r)}{\partial z} + C + \frac{F_z}{F_u}\xi_r - \frac{F_r}{F_u}\xi_z\right] \tag{120}$$

$$\frac{1}{r}\frac{\partial W_r}{\partial \varphi} = \frac{1}{r}\frac{\partial(V_u r)}{\partial r} - \xi_z - \frac{F_r F_u}{F^2}\left[\frac{F_r}{F_u r}\frac{\partial(V_u r)}{\partial r} + \frac{F_z}{F_u r}\frac{\partial(V_u r)}{\partial z} + C + \frac{F_z}{F_u}\xi_r - \frac{F_r}{F_u}\xi_z\right] \tag{121}$$

The first derivatives of h or p, and ρ can be obtained as follows: From equation (97),

$$\frac{1}{r}\frac{\partial h}{\partial \varphi} - \frac{T}{r}\frac{\partial s}{\partial \varphi} = \frac{1}{\rho r}\frac{\partial p}{\partial \varphi} = -F_u \tag{122}$$

Or from equation (9),

$$\frac{1}{r}\frac{\partial h}{\partial \varphi} = \frac{1}{r}\frac{\partial I}{\partial \varphi} - \left(\frac{W_r}{r}\frac{\partial W_r}{\partial \varphi} + \frac{W_u}{r}\frac{\partial W_u}{\partial \varphi} + \frac{W_z}{r}\frac{\partial W_z}{\partial \varphi}\right) \tag{122a}$$

With $\frac{\partial h}{\partial \varphi}$ known, $\frac{\partial \rho}{\partial \varphi}$ can be obtained by using equation (12b):

$$\frac{1}{r}\frac{\partial \ln \rho}{\partial \varphi} = \frac{1}{a^2 r}\frac{\partial h}{\partial \varphi} - \frac{1}{r}\frac{\partial s^*}{\partial \varphi} \tag{123}$$

The second derivatives of the fluid properties with respect to φ can be obtained in a similar manner. Differentiating the continuity equation (1) with respect to φ and dividing by r give

$$\frac{1}{r^2}\frac{\partial^2(\rho W_r r)}{\partial r\,\partial \varphi} + \frac{1}{r^2}\frac{\partial^2(\rho W_u)}{\partial \varphi^2} + \frac{1}{r}\frac{\partial^2(\rho W_z)}{\partial z\,\partial \varphi} = 0 \tag{124}$$

Equations (91) are used to change equation (124) to

$$\frac{1}{r^2}\frac{\partial^2(\rho W_u)}{\partial \varphi^2} = -\frac{1}{r^2}\left[\frac{\partial}{\partial r}\frac{\partial(\rho W_r r)}{\partial \varphi} + \frac{F_r}{F_u}\frac{\partial^2(\rho W_r)}{\partial \varphi^2}\right] - \frac{1}{r}\left[\frac{\partial}{\partial z}\frac{\partial(\rho W_z)}{\partial \varphi} + \frac{F_z}{F_u r}\frac{\partial^2(\rho W_z)}{\partial \varphi^2}\right] \tag{124a}$$

Differentiating equations (117a) and (117c) with respect to φ and dividing by r result in

$$\frac{1}{r^2}\frac{\partial^2 W_z}{\partial \varphi^2} = \frac{1}{r}\frac{\partial \xi_r}{\partial \varphi} + \frac{1}{r^2}\frac{\partial^2(V_u r)}{\partial z\,\partial \varphi} = \frac{1}{r}\frac{\partial \xi_r}{\partial \varphi} + \frac{1}{r^2}\frac{\partial}{\partial z}\frac{\partial(V_u r)}{\partial \varphi} + \frac{1}{r^2}\frac{F_z}{F_u}\frac{\partial^2 W_u}{\partial \varphi^2} \tag{125}$$

$$\frac{1}{r^2}\frac{\partial^2 W_r}{\partial \varphi^2} = -\frac{1}{r}\frac{\partial \xi_z}{\partial \varphi} + \frac{1}{r^2}\frac{\partial^2(V_u r)}{\partial r\,\partial \varphi} = -\frac{1}{r}\frac{\partial \xi_z}{\partial \varphi} + \frac{1}{r^2}\frac{\partial}{\partial r}\frac{\partial(V_u r)}{\partial \varphi} + \frac{1}{r^2}\frac{F_r}{F_u}\frac{\partial^2 W_u}{\partial \varphi^2} \tag{126}$$

Substituting equations (125) and (126) into (124a) and noting that F is perpendicular to W give

$$\frac{1}{r^2}\frac{\partial^2 W_u}{\partial\varphi^2} = -\frac{F_u^2}{F^2}\left[\frac{F_r}{F_u r^2}\frac{\partial}{\partial r}\frac{\partial(V_u r)}{\partial\varphi} + \frac{F_z}{F_u r}\frac{\partial}{\partial z}\frac{\partial(V_u r)}{\partial\varphi} + \frac{1}{\rho r^2}\frac{\partial}{\partial r}\frac{\partial(\rho W_r r)}{\partial\varphi} + \right.$$

$$\left.\frac{1}{\rho r}\frac{\partial}{\partial z}\frac{\partial(\rho W_z)}{\partial\varphi} - \frac{2C}{r}\frac{\partial \ln\rho}{\partial\varphi} + \frac{F_z}{F_u r}\frac{\partial\xi_r}{\partial\varphi} - \frac{F_r}{F_u r}\frac{\partial\xi_z}{\partial\varphi}\right] \tag{127}$$

Equation (103) is to be used in equations (101) and (102) to obtain the second derivatives of W_r and W_z. The second derivatives of h and ρ are obtained from equations (9) and (123) as

$$\frac{1}{r^2}\frac{\partial^2 h}{\partial\varphi^2} = \frac{1}{r^2}\frac{\partial^2 I}{\partial\varphi^2} - \frac{1}{2r^2}\frac{\partial^2 W^2}{\partial\varphi^2} \tag{128}$$

$$\frac{1}{r^2}\frac{\partial^2 \ln\rho}{\partial\varphi^2} = \frac{1}{a^2 r^2}\frac{\partial^2 h}{\partial\varphi^2} - \frac{1}{r^2}\frac{\partial^2 s}{\partial\varphi^2} \tag{129}$$

Similar formulas can be obtained for higher-order derivatives. At a fixed value of r and z, the velocity components, h, and ρ at a short angular distance away from the mean stream surface S_2 can then be obtained by a Taylor series:

$$q(\varphi) = q(\varphi_m) + (\varphi-\varphi_m)\, q'(\varphi_m) + \frac{(\varphi-\varphi_m)^2}{2}\, q''(\varphi_m) + \frac{(\varphi-\varphi_m)^3}{3!}\, q'''(\varphi_m) + \ldots \tag{130}$$

An alternative way to obtain density is to use equation (145) (to be given subsequently) after the other fluid properties are determined. Obviously, the preceding equations are most useful when the flow is isentropic with vorticity equal to zero. Otherwise, the variation of vorticity along the mean stream surface has to be determined first. At present no such method is available. It appears, however, that the method of Squire and Winter (reference 37) and Hawthorne (reference 38) may be generalized to compressible flow for the variation of vorticity along a mean stream surface in turbomachines.

STEPS FOR COMPLETE SOLUTIONS OF THREE-DIMENSIONAL DIRECT AND INVERSE PROBLEMS

In general, the solution of the three-dimensional direct and inverse problem involves the use of both S_1 and S_2 surfaces. In the direct problem, starting with assumed flow surface, the solution is obtained through the successive (alternate) use of the two kinds of flow surface, although a satisfactory approximate solution may be obtained in one or two complete cycles. The use of an approximate method of solution to get a good starting value on each surface will shorten the length of computation. For inverse problems, the process is usually shorter. The calculation will start on the $S_{2,m}$ surface on which either a condition on the fluid velocity or the shape itself is prescribed and an estimated value of B for a desirable blade thickness distribution is used. After the solution on the $S_{2,m}$ surface and its shape are obtained, the blade coordinates are obtained by extending the solution circumferentially either by the series method or by the method given in reference 35 using the variation of the distances between the streamline obtained in the $S_{2,m}$ surface. Because it is important only to obtain the right order of magnitude and the right kind of variation (three-dimensionally) of the blade thickness, the first solution may give satisfactory results. The velocity distribution on the blade surface is controlled directly by the one relation specified on the $S_{2,m}$ surface and the variation of B.

Suitable procedure is subsequently suggested for the solutions of direct and inverse problems with either irrotational or rotational inlet absolute motion, at design or off-design flow conditions, for turbomachines having various wall configurations (fig. 6).

Direct Problem

Axial turbomachines with nontapered straight walls. - In this type of machine, it is desirable to start the computation on S_1 surfaces, because with short axial blade length, the total deviation of the S_1 surface from the cylindrical surface is relatively small, especially along the hub and casing walls.

The following steps are therefore suggested:

(a) In the initial calculation, the flow surfaces are assumed to be cylindrical and the set of equations (60) to (65) derived for cylindrical flow or the approximate method given in reference 39 can also be used to obtain the streamlines and circumferential variation of fluid state on S_1 surfaces at three or more radii.

(b) From the data obtained in step (a), an S_2 stream surface about midway between two blades is constructed by connecting the streamlines which divide mass flow on the S_1 surfaces in the same percentages. The direction numbers of the surface and the W_u and W_z at the surface obtained in step (a) give the starting value of W_r by use of equation (31). The factor B is evaluated either directly from the angular distances between streamlines obtained in (a) or according to equation (100a) with C evaluated from the information obtained in (a). Its value at other radii is obtained by interpolation or by proportioning according to the channel-width ratio. Calculation of the flow on this surface is then made by the use of equations (91) to (115). For subsonic flow with irrotational inlet flow, the solution obtained on the $S_{2,m}$ surface is easily extended circumferentially by series expansion using equations (117) to (130). The values obtained can be further adjusted to fit the given blade (reference 39) and can be used in a more accurate second calculation on S_1 surfaces in the next step. For subsonic flow with large rotationality at the inlet and supersonic flow with significant check caused by the blade entrance angle, it is more desirable to obtain the information on circumferential variations by the use of two or more S_2 surfaces at or near the two blade surfaces.

(c) The radial variation of fluid state computed from the solution obtained in step (b) or the variation of the radial distance between streamlines is used to determine the factor b and used in the principal equation (48) for a more accurate determination of S_1 surfaces and the flows thereon. The general equations (32) to (51) should now be used for the S_1 surfaces located between hub and casing, if not at or near these walls.

(d) The calculation of S_2 surfaces can again be repeated and so forth.

If the inlet flow is quite rotational, so that the S_1 surfaces along the walls and the S_2 surface near the blades may turn around the corners, these surfaces should be chosen at a short distance from these boundary walls as shown in figure 3. By the use of these two kinds of surface, the secondary flow caused by a rotational inlet profile or by the turning of the blades is included in the complete solution.

Axial turbomachines with tapered or curved walls. - The steps involved here are quite similar to those of the preceding case, except that for the initial calculation of S_1 surfaces along or near the tapered or curved wall, either equations (52) to (59) are to be used, or equations (13') to (23') given in reference (35) can be used in the manner given in reference (39).

Radial- and mixed-flow type turbomachines with curved walls. - In this type of machine it is not desirable to start the computation on the S_1 surfaces because the flow surfaces near the walls may deviate considerably from surfaces of revolution because of the long flow path. On the other hand, the solidity of the blade is very high and the blade section is uniformly thin. As a result, the shapes of the S_2 surfaces are closely related to the blade shape and the factor B can be estimated relatively accurately from the blade thickness distribution. The following steps are therefore suggested:

(a) The computation is begun on the $S_{2,m}$ surface. For subsonic irrotational inlet flow, computation need be made only on a mean S_2 surface and the solution can be extended out circumferentially by equations (117) to (130). The approximate method given in reference 40 can also be used in the initial calculation. For subsonic flow with rotational inlet profile and for supersonic flow it may again be more desirable to compute two or more S_2 surfaces between the blades.

(b) The data obtained in step (a) may be used to make calculations for three or more S_1 surfaces between hub and casing walls.

(c) The processes (a) and (b) can be repeated until the desired accuracy is reached.

Inverse Problem

Conditions prescribed on mean stream surface. - In the inverse or design problem it is most convenient to consider a mean stream surface of the S_2 kind about midway between two neighboring blades to be designed (figs. 3 to 5). From the results developed previously for such surfaces, it is seen that in addition to the factor B, the designer can specify only one relation among the fluid properties on that surface, which can be either a velocity component, a relation between two velocity components, or one other reasonable condition. The factor B essentially controls the blade thickness distribution, whereas the relation specified on the surface essentially controls the mean camber surface of the blade. From a consideration of strength and Mach number in general, and the requirement of coolant passage in the case of cooled turbine blades, the designer always has a very good idea of what kind of blade-thickness distribution he wants. With this thickness distribution, the ratio of pitch minus circumferential thickness of blade to pitch can be obtained. After correcting this ratio with some known relations between this ratio and B (such as those given in references 29, 30, and 35), especially near the leading and trailing edges, it can be taken as the factor B in equation (101). Then from the type of velocity diagram or a certain feature of blade shape

desired, a relation along the mean stream surface $S_{2,m}$ can be prescribed and coordinates of the mean surface and the flow on that surface can be solved at the same time by equations (101) to (115). It may be noted that in this process, the designer still has, in general, a little freedom in choosing the value of z_o in equation (115c). For a rotating blade, z_o is usually taken somewhere near the center of gravity of the blade section, whereas for the stationary blade, the position of z_o can be utilized to control the magnitude and distribution of F_r in the most favorable manner.

Boundary conditions for mean stream surface. - In the solution of this $S_{2,m}$ surface, the boundary conditions are a little different for subsonic and supersonic flow. For subsonic flow, not only the variations of the stream function at stations far upstream and downstream are given, the meridional contours of the hub and casing walls are also given (these contours can be determined by approximate calculations from blade row to blade row such as given in references 17 and 41). For supersonic flow, the variation of the stream function and its normal derivative is prescribed on an initial curve, which is not a characteristic curve. Then either the hub and casing contours are prescribed, or only the casing contour but with one more velocity component along the casing is prescribed. In the second case, the flow is extended toward the axis of the machine and the hub contour is determined by the shape of the last streamline for the required mass flow.

Determination of blade shape. - For subsonic irrotational flow, the solution obtained on the mean stream surface can be extended out circumferentially by using equations (117) to (130). The blade surface can be then determined as follows:

(a) The position of the mean stream surface is first determined by solving the circumferential coordinate as a function of the axial coordinate at several radii. With the circumferential coordinate measured from the radial element of the surface chosen at z_o, equation (116) gives, at a constant r:

$$r\varphi_m - (r\varphi_m)_{z=z_o} = \int_{z_o}^{z} \left(\frac{F_z}{F_u}\right)_m dx \tag{131}$$

(b) The blade coordinates (r, φ) will first be chosen at one station z_o as follows (see fig. 9): The mass flow passing through the z_o plane between the mean stream surface and the tentative suction or pressure surface is computed as follows:

$$M_S = \int_{\varphi_m}^{\varphi_s} \int_{r_h}^{r_c} \rho \, W_z r \, dr \, d\varphi \tag{132}$$

$$M_P = \int_{\varphi_m}^{\varphi_p} \int_{r_h}^{r_c} \rho \, W_z r \, dr \, d\varphi \tag{133}$$

Because of the inaccuracy in B for the blade-thickness effect, the mass flow obtained will be a little different from that required. The blade coordinates φ_S and φ_P as functions of z_o and r are modified until the mass flow checks. It is not important that M_S and M_P are a little different from one-half the required mass flow as long as their sum is equal to the total mass flow, but once the division is chosen, it should be maintained at other z-stations.

(c) The blade coordinates obtained at $z = z_o$ are extended upstream and downstream according to the velocity components evaluated at the surface. For example, for a short distance $z - z_o$ away, the changes in the blade surface coordinates r and φ are

$$r = r_o + \left(\frac{W_r}{W_z}\right)_o (z - z_o) \tag{134}$$

$$\varphi = \varphi_o + \left(\frac{1}{r}\frac{W_u}{W_z}\right)_o (z - z_o) \tag{135}$$

After r and φ are thus obtained, the total mass flow may be checked again by equations (132) and (133).

When the blade coordinates are obtained close to the leading and trailing edges, they can be faired in according to some standard shapes. A blade shape is therefore obtained in which the three-dimensional flow of the fluid is considered. The right kind of three-dimensional blade-thickness distribution is obtained and a good knowledge about the flow on the blade surface is also available at the same time. The data obtained in the solution can also be used directly for a more accurate and detailed determination of the velocity variation around the nose of the blade, for a relatively quick check of the series approximation, or for improvement, if necessary, of the inverse solution throughout by the method given earlier for solving the direct problem. This process seems to be the quickest way of establishing some standard three-dimensional flow variations for typical designs of blades from which a

good approximate method for routine design calculations can be established and of providing a basis on which the viscous flow along the blade surfaces and hub and casing walls can be analyzed. The results given in references 29 and 35 indicate that for blades of high solidity, three terms in the series give sufficiently accurate results.

For subsonic flow with vorticity, the circumferential extension cannot be accurately made at the present because of lack of adequate methods for the determination of vorticity variation along the mean stream surface $(S_{2,m})$. An estimate of this variation can be made, however, and the solution can be checked later. An alternative method is to use the shapes of the streamlines and the distances between them obtained in the $S_{2,m}$ solution and to design the blades with the assumption that the flow surfaces are surfaces of revolution by the method given in reference 35. Inasmuch as the rotationality of inlet flow is usually serious only in later stages of a multistage compressor where the hub-tip radius ratio is high, this assumption is reasonably good.

For supersonic flow, the flow in the mean stream surface $S_{2,m}$ is also determined first. If the shock due to the entrance wedge angle is small, an approximate solution of the blade shape can also be obtained by the series method neglecting the finite jump across the shock or using an estimated value. The improvement of the flow variation for the resultant blade is then more important than that in the subsonic case. Local modification of the blade shape can also be made if the velocity distribution on the blade obtained is unsatisfactory. A better method is to use the shape of the streamlines and the distances between them obtained in the $S_{2,m}$ solution and to design the blades assuming flow surfaces of revolution according to the method given in reference 30.

The processes described here for the three-dimensional solution have been and are now being used to analyze the compressible flow through a number of compressors and turbines. Some of the results obtained are given in reference 42.

GENERAL METHODS OF SOLVING PRINCIPAL EQUATION

In the solution of the S_1 surface for the direct problem and of the S_2 surface for both the direct and inverse problems, the main calculation is the solution of the principal equation, which is a second-order, nonlinear partial differential equation in two independent variables. The case when the principal equation is elliptic will be considered first.

Elliptic Case

A common form of the principal equation is written as follows:

$$\frac{1}{\eta}\frac{\partial\psi}{\partial\eta}+\frac{\partial^2\psi}{\partial\zeta^2}+J\frac{\partial\psi}{\partial\zeta}+K\frac{\partial^2\psi}{\partial\eta^2}+L\frac{\partial\psi}{\partial\eta}-\left[\frac{\partial\ \ln b\rho}{\partial\zeta}\frac{\partial\psi}{\partial\zeta}+\left(K\frac{\partial\ \ln b\rho}{\partial\eta}\frac{\partial\psi}{\partial\eta}\right)+M_1 b\rho\right]+$$

$$M_2(b\rho)^2=0 \tag{136}$$

In equation (136), ψ and b are used for both S_1 and S_2 surfaces; η denotes φ for the S_1 surface and r for the S_2 surface; ζ denotes z or r for the S_1 surface, and z for the S_2 surface. The values of η, ζ, J, and K for each individual case are given in the following table:

Case	Surface	Coordinates		J	K	L	Equation
		η	ζ				
1	S_1 (general)	φ	z	0	$\frac{1}{r^2}$	$\frac{n_u}{n_r r}$	(48a)
2	S_1 (surface of revolution)	φ	z	$\frac{\lambda}{r}$	$\frac{1+\lambda^2}{r^2}$	0	(59a)
3	S_1 (cylindrical surface)	φ	z	0	$\frac{1}{r^2}$	0	(65a)
4	S_1 (general)	φ	r	0	$\frac{1}{r^2}$	0	(75a)
5	S_1 (surface of revolution)	φ	r	$\frac{1}{r}$	$\frac{1+\lambda^{-2}}{r^2}$	0	(81a)
6	S_1 (radial plane)	φ	r	$\frac{1}{r}$	$\frac{1}{r^2}$	0	(86a)
7	S_2 ($V_u r$ given)	r	z	0	1	$-\frac{1}{r}$	(107a)
8	S_2 $\left(\frac{W_u}{W_z}\right.$ specified$\left.\right)$	r	z	0	$1+g^2$	$-\frac{1}{r}+g\frac{\partial g}{\partial r}$	(114a)

The equation is nonlinear even in the case of incompressible flow. In the numerical computation, it is convenient to rewrite the equation in the following form:

$$\frac{\partial^2\psi}{\partial\zeta^2} + J\frac{\partial\psi}{\partial\zeta} + K\frac{\partial^2\psi}{\partial\eta^2} + L\frac{\partial\psi}{\partial\eta} = N \tag{137}$$

where

$$N = K\frac{\partial \ln b\rho}{\partial\eta}\frac{\partial\psi}{\partial\eta} + \frac{\partial \ln b\rho}{\partial\zeta}\frac{\partial\psi}{\partial\zeta} - M_1 b\rho - \frac{M_2(b\rho)^2}{\frac{\partial\psi}{\partial\eta}} \tag{138}$$

and is evaluated from any approximate solution at the start of the calculation and from the values of ψ and ρ obtained in the previous cycle during the calculation. For simple boundary shapes for an S_2 surface and simple functions of J, K, and L, it is possible to find a Green's function $G(\eta, \zeta, X, y)$ with its proper characteristics so that the solution of the problem can be written in the following form (for example, see reference 10):

$$\psi(\eta,\zeta) = \int\int G(\eta, \zeta, x, y)\, N(x, y)\, dx\, dy \tag{139}$$

If the boundary wall is arbitrarily curved, it is necessary in this method to use the technique of conformal transformation to render the given boundary into a simpler one, such as cylindrical. Because this process will involve a numerical solution of the Laplace equation with the given boundary shape, it may be better to solve the given equation (137) directly with the given shape by the numerical method. Furthermore, this method will be the only choice in the general case where J and K are complicated functions, which makes the task of obtaining the proper Green's function very difficult if not impossible.

Finite-difference form of principal equation. - In order to solve the given equation (137) directly, the general numerical differentiation formula for first and second derivatives with the function value given at unequally spaced grid points using second- and higher-degree polynomial representation as given by reference 26 is used to give the finite-difference expressions conveniently and accurately at the grid point near the curved boundary. If the value of any quantity q on the stream surface under investigation corresponding to a number of values

of one of the independent variables x not equally spaced, denoted by x^0, x^1, . . . x^i, . . . x^n, is given, the mth derivative of q (on the surface) with respect to x when $x = x^i$ may be written

$$(D^m q)_{x=x^i} = \sum_{j=0}^{n} {}^m_n B^i_j \, q^j + {}^m_n R^i \tag{140}$$

The differentiation coefficients B and the coefficients of the derivatives in the first or second remainder term have been explicitly expressed in reference 26 in terms of the spacings between the successive grid points by using polynomials of the second, third, and fourth degree for general nonuniform spacing throughout and for the special case near a tapered or curved boundary where only the first or last spacing is different from the others. For the special case, these coefficients have also been computed for different ratios of the distance between the boundary and the nearest point and the other spacing, from 0.1 to 1.29 in intervals of 0.01, and are given in reference 26. For spacing ratios lying between these tabulated intervals, B can be obtained from the values tabulated by applying interpolation formulas given in reference 43, or by the direct use of the formulas. Differentiation coefficients B for equal intervals using various degrees of polynomials are given earlier by Bickley in reference 44.

In the present fluid-flow problems, a large region must be covered in order to get to the boundary conditions which are always given at stations far upstream and downstream of the blade row. In order to reduce the labor of computation, it is desirable to attempt to reduce the number of grid points required for a given accuracy by using a degree of polynomial higher than the customary second. A study of the expression of the remainder terms (see reference 26) and actual experience in the present problem show that, in most cases, the use of the fourth-order polynomial will reduce the necessary number of grid points to less than one-fourth that required by the second-order polynomial. Near the leading and trailing edges of the flow on surfaces of the S_1 kind, the variation of ψ is such that accuracy is obtained most effectively by using small spacing there. In such case, the grid pattern should be chosen at these regions first, and either be kept constant or be continuously increased toward the inlet and exit stations.

With the grid pattern and the order of polynomial representation selected, the coefficients B at each point can be obtained from references 44 and 26 for equally and unequally spaced points. Then the differential equation (137) at any grid point whose ψ value is ψ^i is replaced by the following algebraic equation:

$$\sum_{j=0}^{n} \left(J^i \, {}_n^2A_j^i + K^i \, {}_n^1A_j^i\right) \psi^j + \sum_{k=0}^{n} \left({}_n^2A_j^i + {}_n^1A_j^i\right) \psi^k - N^i = 0 \qquad (141)$$

where ψ^i and ψ^k denote the values of ψ on the surface considered corresponding to the grid points along constant ζ and constant η lines, respectively. (See figs. 10 and 11.) It should be noted that, in accordance with the definition of the special partial derivatives, ψ values are those on the surface S; whereas the grid spacings involved are just the distances along the η- and ζ-coordinates.

Boundary conditions. - In flow on surfaces of the first kind, the flow picture is as shown in figure 9. Arbitrarily assigning a value ψ_I on the suction surface, the value ψ_{II} on the pressure surface of the next blade is determined from the mass flow passing between them. These two values are used as the end values in equation (141) for grid points next to the boundary. Outside the blade region, however, the position of the dividing streamline is not known. Instead, there is the condition that the flow repeats itself or the ψ-value increases by $\psi_{II}-\psi_I$ when φ increases by an amount equal to the pitch angle (2π divided by number of blades). It is then convenient to draw any two parallel lines up to the leading and trailing edges of the blade and consider only the grid points lying between the two reference lines. For the φ-derivative at a point ψ^c, for example, the required ψ^b value is obtained from ψ^f, which is a pitch angle away from ψ^b (fig. 10), as

$$\psi^b = \psi^f - (\psi_{II} - \psi_I) \qquad (142)$$

This relation is used between the inlet station 1-1 and the leading edge of the blade and between the exit station 2-2 and the trailing edge of the blade when the S_1 surfaces are assumed to be surfaces of revolution. For the general S_1 surface where its deviation from the surface of revolution is considered, modification has to be made in places such as shown in the exit portion of figure 9. Because of the twist of the flow surface, the dividing line from station 1-1 to the leading edge of the blade becomes two separate lines from the trailing edge of the blade to the exit station 2-2, accompanied by trailing vortices. Although the flow still repeats itself circumferentially every pitch angle, the use of equation (142) for the derivative at a point close to these lines will give inaccurate results. In these cases, it is better to use the end-point differentiation formulas to evaluate the derivatives.

At the station 1-1 sufficiently far upstream of the blades, the flow condition can be taken as uniform and the flow angle, equal to the given inlet angle. For the point h, the ψ value at point i upstream can be obtained from the given flow angle as follows:

$$\psi^i = \psi^g + \frac{\delta_z \tan \alpha_i}{\delta_\eta} (\psi^h - \psi^g)$$

$$= \left(1 - \frac{\delta_\zeta}{\delta_\eta} \tan \alpha_i\right) \psi^g + \left(\frac{\delta_\zeta}{\delta_\eta} \tan \alpha_i\right) \psi^h \qquad (143)$$

Thus, the required ψ value upstream of station 1-1 can be replaced by the values on that station, and only the ψ values downstream of station 1-1 will be involved in the finite-difference expression (141).

An alternative method to take account of the inlet condition is as follows: If the first station 1-1 is chosen sufficiently far from the blades, the variation of the stream function upstream of the station 1-1 is linear in the circumferential direction. The value of the stream function, however, depends on the inlet angle. If solutions for a range of inlet angle are desired, they can be obtained by specifying a number of sets of linearly varying stream functions upstream of station 1-1 as fixed boundary values. The slope of the streamlines obtained in the solution at the inlet then gives the value of the inlet angle. If, however, the solution for a certain specific inlet angle is desired, the streamline obtained in the solution must be adjusted according to that inlet angle, for example, as jk in figure 10 is adjusted to position gk, thereby obtaining an improved set of boundary values of the stream functions to be used in the next calculation. This method is, of course, not so accurate and convenient as the previous method for obtaining a solution for a given inlet angle, but is desirable in the matrix solution because the inlet angle is then not involved in the matrix factorization, thereby making the same matrix factors usable for a range of inlet angle and Mach number.

At the exit station far downstream of the blade, the same methods can be applied. For a blade having a sharp trailing edge, the Kutta-Joukowski condition can be used and the correct exit angle far downstream is the one that gives the flow at the trailing edge satisfying that condition. For round trailing edges, either the position of the stagnation point is assumed or some available empirical rule for the exit angle is used. If the calculation is made to compare with certain experimental results, the measured exit angle may be used.

In flow along surfaces of the second kind, the boundary walls extend all the way to the inlet and exit stations with the ψ values given on the walls (fig. 11). Across the inlet and exit stations, the flow is considered to be uniform and parallel to the walls so that the required ψ value outside the station can be obtained by an equation similar to equation (143). For the inlet station where the axial velocity is radially uniform and there is no radial or tangential velocity, ψ varies as the square of the radius. For the exit station with a certain radial gradient in fluid state, the radial variation of ψ can be determined from the corresponding radial variation in axial velocity and density.

Solution of finite-difference equations. - With the grid system and the degree of polynomial representation chosen and the boundary conditions taken into account, the problem remaining is the solution of the set of linear algebraic equations (141) written for all interior grid points. For a small number of solutions with a given blade, the best method is the relaxation method (references 25, 33, 45, and 36). A modification of this method involving the use of higher-order differences is suggested by Fox (reference 46). Formulas and tables of coefficients obtained in reference 26 enable the direct use of higher-degree polynomials for problems with curved boundaries (reference 29). For the present flow problems, it is necessary to include a large domain to get to the boundary conditions that are given at places far from the blades, and the use of higher-degree polynomials whenever it is applicable greatly reduces the numerical work.

If a number of cases are to be solved for a given geometry (same blades for S_1 surface and same hub and casing shapes for S_2 surface), it is advantageous to solve the problem on a large-scale digital computing machine. If a high-speed digital machine is available, the simultaneous equations may be solved by Liebmann's iterative process, which is the most simple to set up. For quicker results or when only a relatively slow-speed machine is available, the matrix process discussed in reference 26 is most suitable. In a calculation of the $S_{2,m}$ surface for a gas turbine and in a calculation of the S_1 surface of revolution for a centrifugal compressor, the coefficient matrices (about 400 and 200 interior grid points for the two problems, respectively, and the fourth-degree differentiation formula are used) were factorized into the lower and upper triangular matrices on an IBM CPEC and an IBM 604, respectively, in about 60 hours. The determination of ψ for a given set of values of N took only 2 hours on the CPEC for the gas-turbine problem. The gas-turbine problem was also worked out on an Univac; the factorization took only 11 minutes and the determination of ψ, 2.5 minutes. The increasing availability of these high-speed large-scale digital calculating machines will render the suggested method of solving the three-dimensional-flow problem a practical one.

General table for evaluation of density from ψ-derivatives. - After the ψ values are obtained at the end of each cycle of calculation, the velocity components are evaluated from the derivatives of ψ with respect to the coordinates, after the density is obtained as follows: From equations (46), (57), (74), (80), (85), (105), and (113), the relation between h or ρ and ψ-derivatives can be put into a common form as

$$h = I + \frac{\omega^2 r^2}{2} - X - \frac{1}{2}(b\rho)^{-2}\left[k\left(\frac{1}{r}\frac{\partial\psi}{\partial\eta}\right)^2 + \left(\frac{1}{\epsilon}\frac{\partial\psi}{\partial\zeta}\right)^2\right] \tag{144}$$

The quantities represented by X, as well as by ϵ, η, and ζ for different cases, are given in the following table:

Case	Surface	Coordinates		k	X	ϵ	Equation
		η	ζ				
1	S_1 (general)	φ	z	1	$\frac{1}{2}W_r^2$	1	(46)
2	S_1 (surface of revolution)	φ	z	$(1 + \lambda^2)$	0	1	(57)
3	S_1 (cylindrical surface)	φ	z	1	0	1	
4	S_1 (general)	φ	r	1	$\frac{1}{2}W_z^2$	1	(74)
5	S_1 (surface of revolution)	φ	r	$\left(1 + \frac{1}{\lambda^2}\right)$	0	1	(80)
6	S_1 (radial plane)	φ	r	1	0	1	(85)
7	S_2 ($V_u r$ given)	r	z	1	$\frac{1}{2}W_u^2$	r	(105)
8	S_2 $\left(\frac{W_u}{W_z}\right.$ given$\left.\right)$	r	z	$1 + g^2$	0	r	(113)

With the ψ-derivatives evaluated, if an exact determination of h or ρ from the preceding equation considering the variation of specific heat with temperature is desired, the Keenan and Kay gas tables (reference 47) can be used. With two or three readings of h and ρ (or its reciprocal, specific volume), the correct value of h or ρ satisfying equation (144) is found. For most cases where the temperature range involved is not too large the use of an appropriate average value of γ, $\bar{\gamma}$, may give accurate enough results. With the use of an average $\bar{\gamma}$, the density at any point in the flow field can be related to the inlet total value by equation (12a) as

$$\frac{\rho}{\rho_{T,i}} = \left(\frac{h}{H_i}\right)^{\frac{1}{\bar{\gamma}-1}} e^{s^*_{T,i}-s^*} = \left\{\frac{I + \frac{\omega^2 r^2}{2} - X}{H_i} - \frac{\left[k\left(\frac{1}{r}\frac{\partial\psi}{\partial\eta}\right)^2 + \left(\frac{1}{\epsilon}\frac{\partial\psi}{\partial\zeta}\right)^2\right]}{2(b\rho)^2 H_i}\right\}^{\frac{1}{\bar{\gamma}-1}} e^{s^*_{T,i}-s^*} \tag{145}$$

In order to make out a general table for the calculation of density from the ψ-derivatives, the preceding equation is rewritten as

$$\Sigma^2 = \left(1 - \frac{\Phi}{\Sigma^2}\right)^{\frac{2}{\bar{\gamma}-1}} \tag{146}$$

where

$$\Sigma = \left(\frac{\rho}{\rho_{T,i}}\right)\left(\frac{I + \frac{1}{2}\omega^2 r^2 - X}{H_i}\right)^{-\frac{1}{\bar{\gamma}-1}} e^{s^*-s^*_{T,i}}$$

and

$$\Phi = \left[K\left(\frac{1}{r}\frac{\partial\psi}{\partial\eta}\right)^2 + \left(\frac{1}{\epsilon}\frac{\partial\psi}{\partial\zeta}\right)^2\right](2H_i)^{-1}(b\rho_{T,i})^{-2}\left(\frac{I + \frac{1}{2}\omega^2 r^2 - X}{H_i}\right)^{-\frac{\bar{\gamma}+1}{\bar{\gamma}-1}} e^{2(s^*-s^*_{T,i})}$$

The functional relations between Σ and Φ are given in table I for $\bar{\gamma}$ equal to 1.4 and 4/3, respectively. From the given inlet condition and the given X values, the variation of

$$(2\,H_i)^{-1}(b\rho_{T,i})^{-2}\left(\frac{I + \frac{\omega^2 r^2}{2} - X}{H_i}\right)^{-\frac{\bar{\gamma}+1}{\bar{\gamma}-1}}$$

is first computed and plotted as an auxiliary graph or table as a function of $\left(\frac{\omega^2 r^2}{2} - X\right)$. A similar auxiliary graph or table is prepared for the variation of

$$\left(\frac{I + \frac{1}{2}\omega^2 r^2 - X}{H_i}\right)^{-\frac{1}{\bar{\gamma}-1}}$$

as a function of $\left(\frac{\omega^2 r^2}{2} - X\right)$. Anytime during the calculation, from the value of $\left(\frac{\omega^2 r^2}{2} - X\right)$ at each point (in general, X changes during successive improvements between S_1 and S_2 surfaces),

$$(2H_i)^{-1}(b\rho_{T,i})^{-2}\left(\frac{I + \frac{1}{2}\omega^2 r^2 - X}{H_i}\right)^{-\frac{\bar{\gamma}+1}{\bar{\gamma}-1}}$$

is read from the first graph or table and is combined with

$$\left[k\left(\frac{1}{r}\frac{\partial\psi}{\partial\eta}\right)^2 + \left(\frac{1}{\epsilon}\frac{\partial\psi}{\partial\zeta}\right)^2\right]$$

and the entropy factor to obtain Φ. The value of Σ is then read from tables I or II. After the value of

$$\left(\frac{I + \frac{1}{2}\omega^2 r^2 - X}{H_i}\right)^{-\frac{1}{\bar{\gamma}-1}}$$

is read from the second curve or table, the density ratio is obtained.

Hyperbolic Case

In the hyperbolic case, the main problem is the solution of the following principal equation, written in a common form for the two kinds of flow surface:

$$J\frac{\partial^2\psi}{\partial\zeta^2} + 2\frac{K}{\nu}\frac{\partial^2\psi}{\partial\zeta\partial\eta} + \frac{L}{\nu^2}\frac{\partial^2\psi}{\partial\eta^2} + M\frac{\partial\psi}{\partial\zeta} + \frac{N}{\nu}\frac{\partial\psi}{\partial\eta} = 0 \tag{147}$$

with the initial condition that ψ and its normal derivative are given on a curve which is not a characteristic curve. From equation (147), the equation of the characteristic curve is

$$J\left(\nu\frac{d\eta}{d\zeta}\right)^2 - 2K\left(\nu\frac{d\eta}{d\zeta}\right) + L = 0 \tag{148}$$

The slopes of the characteristic curves are

$$\Lambda_1 = \left(\nu\frac{d\eta}{d\zeta}\right)_1 = \frac{K}{J} - \frac{1}{J}\sqrt{K^2 - JL} \tag{149a}$$

$$\Lambda_2 = \left(\nu \cdot \frac{d\eta}{d\zeta}\right)_2 = \frac{K}{J} + \frac{1}{J}\sqrt{K^2 - JL} \tag{149b}$$

The coefficients J, K, L, and ν and the independent variables η and ζ for the eight cases considered are given in the table on the following page. Using these values of J, K, and L, Λ_1 and Λ_2 are also expressed in terms of the velocity components. Except for cases 2, 5, and 8, they can also be expressed in the usual trigonometric form, $\tan(\chi \pm \mu)$. The values of χ and μ are also given.

Changes of ψ-derivatives along characteristic curve. - When the reference point on the $\eta\zeta$-plane moves along the image of the characteristic curve in the $\eta\zeta$-plane corresponding to a small change in ζ, $d\zeta$, the change in η is $d\eta = \frac{\Lambda}{\nu} d\zeta$. Because of these two small changes, the change of any quantity q on the surface is (fig. 12)

$$dq = \frac{dq}{d\zeta} d\zeta = \frac{\partial q}{\partial \zeta} d\zeta + \frac{\partial q}{\partial \eta} \frac{\Lambda}{\nu} d\zeta \tag{150}$$

or

$$\frac{dq}{d\zeta} = \frac{\partial q}{\partial \zeta} + \frac{\Lambda}{\nu} \frac{\partial q}{\partial \eta} \tag{151}$$

Hence along Λ_1

$$\frac{d}{d\zeta} \frac{\partial \psi}{\partial \zeta} = \frac{\partial}{\partial \zeta} \frac{\partial \psi}{\partial \zeta} + \frac{\Lambda_1}{\nu} \frac{\partial}{\partial \eta} \frac{\partial \psi}{\partial \zeta} = \frac{\partial^2 \psi}{\partial \zeta^2} + \frac{\Lambda_1}{\nu} \frac{\partial^2 \psi}{\partial \zeta \partial \eta} \tag{152}$$

$$\frac{d}{d\zeta} \frac{\partial \psi}{\partial \eta} = \frac{\partial}{\partial \zeta} \frac{\partial \psi}{\partial \eta} + \frac{\Lambda_1}{\nu} \frac{\partial}{\partial \zeta} \frac{\partial \psi}{\partial \eta} = \frac{\partial^2 \psi}{\partial \zeta \partial \eta} + \frac{\Lambda_1}{\nu} \frac{\partial^2 \psi}{\partial \eta^2} \tag{153}$$

From equations (152) and (153),

$$\frac{\partial^2 \psi}{\partial \zeta \partial \eta} = \frac{d}{d\zeta} \frac{\partial \psi}{\partial \eta} - \frac{\Lambda_1}{\nu} \frac{\partial^2 \psi}{\partial \eta^2} \tag{154}$$

$$\frac{\partial^2 \psi}{\partial \zeta^2} = \frac{d}{d\zeta} \frac{\partial \psi}{\partial \zeta} - \frac{\Lambda_1}{\nu} \frac{d}{d\zeta} \frac{\partial \psi}{\partial \eta} + \left(\frac{\Lambda_1}{\nu}\right)^2 \frac{\partial^2 \psi}{\partial \eta^2} \tag{155}$$

Case	Surface	Coordinates η	Coordinates ζ	ν	J	K	L	Λ: $\frac{K \mp \sqrt{K^2-JL}}{J}$	Λ: $\tan(\chi \pm \mu)$: $\tan\chi$	Λ: $\tan(\chi \pm \mu)$: w	Λ: $\tan(\chi \pm \mu)$: $\operatorname{osc}\mu$
1	S_1(general)	φ	z	r	$1 - \frac{W_z^2}{a^2}$	$-\frac{W_u W_z}{a^2}$	$1 - \frac{W_u^2}{a^2}$	$-\frac{W_u W_z \pm a\sqrt{W_u^2+W_z^2-a^2}}{a^2-W_z^2}$	$\frac{W_u}{W_z}$	$\sqrt{W_u^2+W_z^2}$	$\frac{W}{a}$
2	S_1 (surface of revolution)	φ	z	r	$1 - \frac{W_r^2+W_z^2}{a^2}$	$-(1+\lambda^2)\frac{W_u W_z}{a^2}$	$(1+\lambda^2)\left(1-\frac{W_u^2}{a^2}\right)$	$-\frac{\sqrt{1+\lambda^2}\left[\sqrt{1+\lambda^2}W_u W_z \pm a\sqrt{W^2-a^2}\right]}{a^2-(W_r^2+W_z^2)}$	$\frac{W_u}{W_z}$	$\sqrt{W_u^2+W_z^2}$	
3	S_1 (cylindrical surface)	φ	z	r	$1 - \frac{W_z^2}{a^2}$	$-\frac{W_u W_z}{a^2}$	$1 - \frac{W_u^2}{a^2}$	$-\frac{W_u W_z \pm a\sqrt{W^2-a^2}}{a^2-W_z^2}$	$\frac{W_u}{W_z}$	$\sqrt{W_u^2+W_z^2} = W$	$\frac{W}{a} = \frac{W}{a}$
4	S_1(general)	φ	r	r	$1 - \frac{W_r^2}{a^2}$	$-\frac{W_u W_r}{a^2}$	$1 - \frac{W_u^2}{a^2}$	$-\frac{W_r W_u \pm a\sqrt{W_r^2+W_u^2-a^2}}{a^2-W_r^2}$	$\frac{W_u}{W_r}$	$\sqrt{W_u^2+W_r^2}$	$\frac{W}{a}$
5	S_1 (surface of revolution)	φ	r	r	$1-\frac{W_r^2+W_z^2}{a^2}$	$-\left(1+\frac{1}{\lambda^2}\right)\frac{W_u W_r}{a^2}$	$\left(1+\frac{1}{\lambda^2}\right)\left(1-\frac{W_u^2}{a^2}\right)$	$-\frac{\sqrt{1+\lambda^2}\left[\sqrt{1+\lambda^{-2}}\ W_r W_u \pm a\sqrt{W^2-a^2}\right]}{a^2-(W_r^2+W_z^2)}$	$\frac{W_u}{W_r}$	$\sqrt{W_u^2+W_r^2}$	
6	S_1 (radial plane)	φ	r	r	$1 - \frac{W_r^2}{a^2}$	$-\frac{W_r W_u}{a^2}$	$1 - \frac{W_u^2}{a^2}$	$-\frac{W_r W_u \pm a\sqrt{W^2-a^2}}{a^2-W_r^2}$	$\frac{W_u}{W_r}$	$\sqrt{W_u^2+W_r^2} = W$	$\frac{W}{a} = \frac{W}{a}$
7	S_2($V_u r$ given)	r	z	1	$1 - \frac{W_z^2}{a^2}$	$-\frac{W_r W_z}{a^2}$	$1 - \frac{W_r^2}{a^2}$	$-\frac{W_r W_z \pm a\sqrt{W_r^2+W_z^2-a^2}}{a^2-W_z^2}$	$\frac{W_r}{W_z}$	$\sqrt{W_r^2+W_z^2}$	$\frac{W}{a}$
8	S_2 (W_u/W_z given)	r	z	1	$1-\frac{W_u^2+W_z^2}{a^2}$	$-(1+g^2)\frac{W_r W_z}{a^2}$	$(1+g^2)\left(1-\frac{W_r^2}{a^2}\right)$	$-\frac{\sqrt{1+g^2}\left[\sqrt{1+g^2}\ W_r W_z \pm a\sqrt{W^2-a^2}\right]}{a^2-(W_r^2+W_z^2)}$	$\frac{W_r}{W_z}$	$\sqrt{W_r^2+W_z^2}$	

Substituting equations (154) and (155) into equation (147) gives

$$J \frac{d}{d\zeta} \frac{\partial\psi}{\partial\zeta} + (2K - J\Lambda_1) \frac{1}{\nu} \frac{d}{d\zeta} \frac{\partial\psi}{\partial\eta} + (J\Lambda_1{}^2 - 2K\Lambda_1 + L) \frac{1}{\nu^2} \frac{\partial^2}{\partial\eta^2} + M \frac{\partial\psi}{\partial\zeta} + \frac{N}{\nu} \frac{\partial\psi}{\partial\eta} = 0 \tag{156}$$

By virtue of equations (149a) and (149b), equation (156) becomes

$$\frac{d}{d\zeta} \frac{\partial\psi}{\partial\zeta} + \frac{\Lambda_2}{\nu} \frac{d}{d\zeta} \frac{\partial\psi}{\partial\eta} + \frac{M}{J} \frac{\partial\psi}{\partial\zeta} + \frac{N}{J\nu} \frac{\partial\psi}{\partial\eta} = 0 \tag{157a}$$

Similarly, along the second characteristic curve Λ_2,

$$\frac{d}{d\zeta} \frac{\partial\psi}{\partial\zeta} + \frac{\Lambda_1}{\nu} \frac{d}{d\zeta} \frac{\partial\psi}{\partial\eta} + \frac{M}{J} \frac{\partial\psi}{\partial\zeta} + \frac{N}{J\nu} \frac{\partial\psi}{\partial\eta} = 0 \tag{157b}$$

Starting from two points a and b a short distance apart on the initial curve, equations (149a) and (149b) give the tangent to the characteristic curves at these two points and equations (157a) and (157b) give the new value of $\partial\psi/\partial\zeta$ and $\partial\psi/\partial\eta$ at the point of intersection C of the two tangent lines (fig. 11). The auxiliary equations corresponding to the particular problem are then used to determine other pertinent quantities at the point C. This process is to be carried step-by-step downstream.

Changes of fluid velocity and direction along characteristic curve. - When the characteristic curve hits the boundary wall, it is more convenient to express equations (157a) and (157b) in terms of the magnitude of the fluid velocity and the flow direction. In order to do this, the definitions of ψ-derivatives are first put in a common form for all cases as

$$\frac{\partial\psi}{\partial\eta} = b\rho\, W_\zeta\, r \tag{158}$$

$$\frac{\partial\psi}{\partial\zeta} = -\, b\rho\, W_\eta\, \epsilon \tag{159}$$

where ϵ equals 1 and r for the S_1 and S_2 surfaces, respectively. By the use of equation (45),

$$\frac{d}{d\zeta}\frac{\partial\psi}{\partial\zeta} = -\,b\rho\,W_\eta\,\epsilon\left(\frac{d\ \ln b}{d\zeta} + \frac{1}{a^2}\frac{dh}{d\zeta} - \frac{ds^*}{d\zeta} + \frac{d\ \ln W_\eta}{d\zeta} + \frac{d\ \ln \epsilon}{d\zeta}\right) \tag{160}$$

$$\frac{d}{d\zeta}\frac{\partial\psi}{\partial\eta} = b\rho\,W_\zeta\,r\left(\frac{d\ \ln b}{d\zeta} + \frac{1}{a^2}\frac{dh}{d\zeta} - \frac{ds^*}{d\zeta} + \frac{d\ \ln W_\zeta}{d\zeta} + \frac{d\ \ln r}{d\zeta}\right) \tag{161}$$

Substituting equations (160) and (161) into equation (156) yields

$$\left(\Lambda_2\,W_\zeta - W_\eta\right)\left(\frac{d\ \ln b}{d\zeta} + \frac{1}{a^2}\frac{dh}{d\zeta} - \frac{ds^*}{d\zeta}\right) + \left(\Lambda_2\frac{dW_\zeta}{d\zeta} - \frac{dW_\eta}{d\zeta}\right) +$$

$$\Lambda_2\,W_\zeta\frac{d\ \ln r}{d\zeta} - W_\eta\frac{d\ \ln \epsilon}{d\zeta} + W_\zeta\frac{N}{J} - W_\eta\frac{M}{J} = 0 \tag{162}$$

Let

$$\begin{aligned} W_\eta &= w\ \sin\chi \\ W_\zeta &= w\ \cos\chi \end{aligned} \tag{163}$$

and

$$h = I + \frac{\omega^2 r^2}{2} - \frac{1}{2}\left(W_\zeta{}^2 + W_\eta{}^2 + W_\xi{}^2\right) = I + \frac{\omega^2 r^2}{2} - \frac{1}{2}\left(w^2 + W_\zeta{}^2\right) \tag{164}$$

where W_ξ is equal to W_r, W_r, 0, W_z, W_z, 0, W_u, and W_u for cases 1 to 8, respectively. By the use of equations (163), (164), and (144), equation (162) can be written

$$\frac{1}{w}\left(\frac{w^2}{a^2} - 1\right)\frac{dw}{d\zeta} + \frac{\cos\chi + \Lambda_2\sin\chi}{\Lambda_2\cos\chi - \sin\chi}\frac{d\chi}{d\zeta} - \frac{1}{a^2}\frac{d}{d\zeta}\left(I + \frac{\omega^2 r^2}{2} - \frac{W_\xi{}^2}{2}\right) -$$

$$\frac{d\ \ln b}{d\zeta} + \frac{1}{\Lambda_2\cos\chi - \sin\chi}\left(\sin\chi\ \frac{d\ \ln \epsilon}{d\zeta} - \Lambda_2\cos\chi\frac{d\ \ln r}{d\zeta}\right) + \frac{ds^*}{d\zeta} +$$

$$\frac{1}{J}\frac{M\sin\chi - N\cos\chi}{\Lambda_2\cos\chi - \sin\chi} = 0 \tag{165}$$

A similar expression can be obtained for the change in w and χ along Λ_2 by replacing Λ_2 by Λ_1 in the preceding equation. For cases 1, 3, 4, 6, and 7, Λ can be written as $\tan(\chi \pm \mu)$, where μ is equal to $\sin^{-1}\frac{a}{w}$, through purely trigonometric transformations as follows:

$$\Lambda = \frac{K \mp \sqrt{K^2 - JL}}{J} = -\frac{W_\eta W_\zeta \pm a\sqrt{w^2 - a^2}}{a^2 - W_\zeta^2}$$

$$= \frac{\sin\chi \cos\chi \pm \sin\mu \cos\mu}{\cos^2\chi - \sin^2\mu} = \frac{\sin 2\chi \pm \sin 2\mu}{\cos 2\chi + \cos 2\mu}$$

$$= \frac{\sin(\chi+\mu)\cos(\chi-\mu)}{\cos(\chi+\mu)\cos(\chi-\mu)} \text{ or } \frac{\cos(\chi+\mu)\sin(\chi-\mu)}{\cos(\chi+\mu)\cos(\chi-\mu)}$$

$$= \tan(\chi+\mu) \text{ or } \tan(\chi-\mu)$$

For these cases, equation (165) can then be written (compare reference 30):

$$\frac{1}{w}\frac{dw}{d\zeta} \mp \tan\mu\frac{d\chi}{d\zeta} + \tan^2\mu\left[-\frac{1}{a^2}\frac{d}{d\zeta}\left(I + \frac{\omega^2 r^2}{2} - \frac{W_\chi}{2}\right) - \frac{d\ln b}{d\zeta} + \frac{ds^*}{d\zeta} + \frac{1}{\Lambda\cos\chi - \sin\chi}\left(\sin\chi\frac{d\ln\epsilon}{d\zeta} - \Lambda\cos\chi\frac{d\ln r}{d\zeta}\right) + \frac{1}{J}\frac{M\sin\chi - N\cos\chi}{\Lambda\cos\chi - \sin\chi}\right] = 0 \tag{166}$$

where the minus and plus signs on the second term and subscripts 2 and 1 for λ in the last two terms are used along characteristics Λ_1 and Λ_2, respectively. Equations (165) and (166) are most useful when the characteristic hits the boundary wall. For a direct problem, the slope there is known from the given blade shape and for an inverse or design problem, either the desired turning at the boundary or the velocity on the boundary is prescribed. With either $d\chi$ or dw known, dw or $d\chi$ is evaluated from equation (162) or (165) (only one characteristic equation is used at the wall). For convenience of setup in

calculation, this system can also be used for interior points. Except that more terms are involved in the present problem and that w takes different meanings in different cases, the procedure of calculation is very much the same as ordinary two-dimensional flow described in references 32 and 30.

CONCLUDING REMARKS

A general theory of steady three-dimensional flow of a nonviscous fluid in subsonic and supersonic turbomachines having arbitrary hub and casing shapes and a finite number of thick blades is presented. The solution of the three-dimensional direct and inverse problem is obtained by investigating a combination of flows on relative stream surfaces whose intersection with a z-plane either upstream of or somewhere inside the blade row form a circular arc or a radial line. The equations obtained to describe the fluid flow on these stream surfaces show clearly the several approximations involved in ordinary two-dimensional treatments. They also lead to a solution of the three-dimensional problem in a mathematically two-dimensional manner through an iterative process. The equation of continuity is combined with the equation of motion in either the tangential or the radial direction through the use of a stream function defined on the surface, and the resulting equation is chosen as the principal equation for such flows. The character of this equation depends on the relative magnitude of the local velocity of sound and a certain combination of velocity components of the fluid. A general method to solve this equation by both hand and machine computations when the equation is elliptic or hyperbolic is described. The theory is applicable to both irrotational and rotational absolute flow at the inlet of the blade row and to both design and off-design operations.

Lewis Flight Propulsion Laboratory
National Advisory Committee for Aeronautics
Cleveland, Ohio, July 13, 1951

REFERENCES

1. Lorenz, H.: Theorie und Berechnung der Vollturbinen und Kreiselpumpen. V.D.I. Zeitschr., Bd. 49, Nr. 41, Okt. 14, 1905, S. 1670-1675.

2. Bauersfeld, W.: Zuschrift an die Redaktion. V.D.I. Zeitschr., Bd. 49, Nr. 49, Dez. 9, 1905, S. 2007-2008.

3. Stodola, A.: Steam and Gas Turbines. McGraw-Hill Book Co., Inc., 1927. (Reprinted, Peter Smith (New York), 1945, pp. 990-992.)

4. v. Mises, R.: Theorie der Wasserräder. Zeitschr. f. Math. und Phys., Bd. 57, 1909, S. 1-120.

5. Dreyfus, L. A.: A Three-dimensional Theory of Turbine Flow and Its Application to the Design of Wheel Vanes for Francis and Propeller Turbines. Acta Polytechnica, Mech. Eng. Ser., vol. 1, Nr. 1, 1946.

6. Ruden, P.: Investigation of Single Stage Axial Fans. NACA TM 1062, 1944.

7. Traupel, Walter: New General Theory of Multistage Axial Flow Turbomachines. Navships 250-445-1, Navy Dept. (Trans. by C. W. Smith, Gen. Elec. Corp.)

8. Meyer, Richard: Beitrag zur Theorie feststehender Schaufelgitter. Nr. 11, Mitteilungen aus Inst. f. Aero. (Zürich), 1946.

9. Ackeret, J.: Zum Entwurf dichtstehender Schaufelgitter. Schweiz. Bauztg., Bd. 120, Nr. 9, Aug. 29, 1942, S. 103-108.

10. Marble, Frank E.: The Flow of a Perfect Fluid through an Axial Turbomachine with Prescribed Blade Loading. Jour. Aero. Sci., vol. 15, no. 8, Aug. 1948, pp. 473-485.

11. Marble, Frank E.: Some Problems Concerning the Three-Dimensional Flow in Axial Turbomachines. I.A.S. Preprint No. 182, 1949.

12. Siestrunck, R., et Fabri, J.: Écoulements tourbillonnaires dans les machines axiales. Office National d'Etudes et de Recherches Aeronautiques. Pub. 45, 1950.

13. Spannhake, W.: The Three-Dimensional Theory of Turbines and Pumps for Incompressible Fluids. R.T.P. Trans. No. 1568, British M.A.P. (From Forschung, Vol. 8, No. 1, Jan.-Feb. 1937, pp. 29-34.)

14. Gravolos, Fausto G.: The Flow of an Inviscid, Incompressible Fluid through a Turbo-Machine with Arbitrary Hub Shape. Special Tech. Rep. No. 3, Rennselaer Poly. Inst., Aug. 17, 1948. (N7-ONR 336-T.O. No. 1, NR 061-014.)

15. Wislicenus, George F.: Fluid Mechanics of Turbomachinery. McGraw-Hill Book Co., Inc., 1947.

16. Reissner, Hans: Blade Systems of Circular Arrangement in Steady, Compressible Flow. R. Courant Anniversary Volume, Interscience Pub., Inc., 1948, pp. 307-327.

17. Wu, Chung-Hua, and Wolfenstein, Lincoln: Application of Radial-Equilibrium Condition to Axial-Flow Compressor and Turbine Design. NACA Rep. 955, 1950. (Formerly NACA TN 1795.)

18. Wu, Chung-Hua: A General Through-Flow Theory of Fluid Flow with Subsonic or Supersonic Velocity in Turbomachines of Arbitrary Hub and Casing Shapes. NACA TN 2302, 1951.

19. Goldstein, Arthur W.: Axisymmetric Supersonic Flow in Rotating Impellers. NACA TN 2388, 1951.

20. Courant, R., and Friedrichs, K. O.: Supersonic Flow and Shock Waves. Interscience Pub., Inc., 1948.

21. Vazsonyi, Andrew: On Rotational Gas Flows. Quart. Appl. Math., vol. III, no. 1, April 1945, pp. 29-37.

22. Hicks, B. L., Guenther, P. E., and Wasserman, R. H.: New Formulations of the Equations for Compressible Flow. Quart. Appl. Math., vol. V, no. 3, Oct. 1947, pp. 357-360.

23. Ferrari, C.: Determination of the Pressure Exerted on Solid Bodies of Revolution with Pointed Noses Placed Obliquely in a Stream of Compressible Fluid at Supersonic Velocity. R.T.P. Trans. No. 1105, British M.A.P.

24. Moeckel, W. E.: Use of Characteristic Surfaces for Unsymmetrical Supersonic Flow Problems. NACA TN 1849, 1949.

25. Southwell, R. V.: Relaxation Methods in Theoretical Physics. Clarendon Press (Oxford), 1946.

26. Wu, Chung-Hua: Formulas and Tables of Coefficients for Numerical Differentiation with Function Values Given at Unequally Spaced Points and Application to the Solution of Partial Differential Equations. NACA TN 2214, 1950.

27. Weinig, F.: Die Strömung um die Schaufeln von Turbomaschinen. Johann Ambrosius Barth (Leipzig), 1935.

28. Keller, C.: Axialgebläse vom Standpunkt der Tragflügeltheorie. Gebr. Leeman & Co. (Zurich), 1934.

29. Wu, Chung-Hua, and Brown, Curtis A.: Method of Analysis for Compressible Flow Past Arbitrary Turbomachine Blades on General Surface of Revolution. NACA TN 2407, 1951.

30. Wu, Chung-Hua, and Costilow, Eleanor L.: A Method of Solving the Direct and Inverse Problem of Supersonic Flow along Arbitrary Stream Filaments of Revolution in Turbomachines. NACA TN 2492, 1951.

31. Webster, Arthur Gordon: Partial Differential Equations of Mathematical Physics, Samuel J. Plimpton, ed., G. E. Stechert & Co., 2d ed., 1933, pp. 239-241.

32. Ferri, Antonio: Elements of Aerodynamics of Supersonic Flows. The Macmillan Co., 1949.

33. Emmons, Howard W.: The Numerical Solution of Compressible Fluid Flow Problems. NACA TN 932, 1944.

34. Ince, E. L.: Ordinary Differential Equations. Dover Pub., 1944.

35. Wu, Chung-Hua, and Brown, Curtis A.: A Method of Designing Turbomachine Blades with a Desirable Thickness Distribution for Compressible Flow along an Arbitrary Stream Filament of Revolution. NACA TN 2455, 1951.

36. Stanitz, John D.: Two-Dimensional Compressible Flow in Turbomachines with Conic Flow Surfaces. NACA Rep. 935, 1949. (Formerly NACA TN 1744.)

37. Squire, H. B., and Winter, K. G.: The Secondary Flow in a Cascade of Airfoils in a Nonuniform Stream. Jour. Aero. Sci., vol. 18, no. 4, April 1951, pp. 271-277.

38. Hawthorne, William R.: Secondary Circulation in Fluid Flow. Gas. Turbine Lab., M.I.T., May 1950.

39. Wu, Chung-Hua, and Brown, Curtis A.: A Theory of the Direct and Inverse Problems of Compressible Flow Past Cascade of Arbitrary Airfoils. I.A.S. Preprint No. 326, Jan. 1951.

40. Hamrick, Joseph T., Ginsburg, Ambrose, and Osborn, Walter M.: Method of Analysis for Compressible Flow through Mixed-Flow Centrifugal Impellers of Arbitrary Design. NACA TN 2165, 1950.

41. Wu, Chung-Hua, Sinnette, John T., Jr., and Forrette, Robert E.: Theoretical Effect of Inlet Hub-Tip-Radius Ratio and Design Specific Mass Flow on Design Performance of Axial-Flow Compressors. NACA TN 2068, 1950.

42. Wu, Chung-Hua: A General Theory of Three-Dimensional Flow with Subsonic and Supersonic Velocity in Turbomachines Having Arbitrary Hub and Casing Shapes. Part II. Paper No. 50-A-79, presented at the Ann. Meeting of A.S.M.E. (New York), Nov. 27-Dec. 1, 1950.

43. Anon.: Tables of Lagrangian Interpolation Coefficients. Columbia Univ. Press., 1944.

44. Bickley, W. G.: Formulae for Numerical Differentiation. The Math. Gazette (London), vol. XXV, no. 263, 1941, pp. 19-27.

45. Emmons, Howard W.: The Theoretical Flow of a Frictionless, Adiabatic, Perfect Gas Inside of a Two-Dimensional Hyperbolic Nozzle. NACA TN 1003, 1946.

46. Fox, L.: Some Improvements in the Use of Relaxation Methods for the Solution of Ordinary and Partial Differential Equations. Proc. Roy. Soc. (London), vol. 190, no. A1020, ser. A, June 1947, pp. 31-59.

47. Keenan, Joseph H., and Kaye, Joseph: Gas Tables. John Wiley & Sons, Inc., 1948.

TABLE I - GENERAL DENSITY TABLE

(a) $\bar{\gamma} = 1.4$

$$\Sigma^2 = \left(1 - \frac{\varphi}{\Sigma^2}\right)^{-\frac{2}{\bar{\gamma}-1}}$$

5φ	$\frac{1}{\Sigma}$	Σ	5φ	$\frac{1}{\Sigma}$	Σ	5φ	$\frac{1}{\Sigma}$	Σ
0.001	1.0005007	0.99949955	0.056	1.0303554	0.97053890	0.111	1.0659554	0.93812555
.002	1.0010027	.99899830	.057	1.0309453	.96998357	.112	1.0666704	.93749672
.003	1.0015061	.99849616	.058	1.0315371	.96942708	.113	1.0673882	.93686627
.004	1.0020109	.99799314	.059	1.0321307	.96886954	.114	1.0681087	.93623430
.005	1.0025171	.99748922	.060	1.0327263	.96831077	.115	1.0688320	.93560073
0.006	1.0030246	0.99698452	0.061	1.0333238	0.96775086	0.116	1.0695582	0.93496548
.007	1.0035335	.99647894	.062	1.0339232	.96718983	.117	1.0702883	.93432857
.008	1.0040438	.99597249	.063	1.0345246	.96662757	.118	1.0710192	.93369008
.009	1.0045555	.99546516	.064	1.0351279	.96606419	.119	1.0717540	.93304993
.010	1.0050687	.99495686	.065	1.0357332	.96549961	.120	1.0724918	.93240806
0.011	1.0055833	0.99444770	0.066	1.0363404	.96493392	0.121	1.0732326	0.93176447
.012	1.0060993	.99393768	.067	1.0369496	.96436702	.122	1.0739763	.93111924
.013	1.0066168	.99342669	.068	1.0375609	.96379885	.123	1.0747230	.93047232
.014	1.0071357	.99291486	.069	1.0381742	.96322948	.124	1.0754728	.92982361
.015	1.0076561	.99240207	.070	1.0387895	.96265894	.125	1.0762256	.92917321
0.016	1.0081779	0.99188844	0.071	1.0394069	0.96208713	0.126	1.0769815	0.92852106
.017	1.0087012	.99137386	.072	1.0400263	.96151415	.127	1.0777405	.92786714
.018	1.0092260	.99085834	.073	1.0406478	.96093991	.128	1.0785026	.92721149
.019	1.0097522	.99034199	.074	1.0412714	.96036442	.129	1.0792678	.92655410
.020	1.0102800	.98982460	.075	1.0418971	.95978768	.130	1.0800362	.92589489
0.021	1.0108093	0.98930629	0.076	1.0425249	0.95920970	0.131	1.0808079	0.92523380
.022	1.0113401	.98878706	.077	1.0431548	.95863049	.132	1.0815828	.92457092
.023	1.0118724	.98826690	.078	1.0437869	.95804996	.133	1.0823610	.92390616
.024	1.0124063	.98774573	.079	1.0444212	.95746812	.134	1.0831424	.92323964
.025	1.0129417	.98722365	.080	1.0450576	.95688506	.135	1.0839272	.92257118
0.026	1.0134786	0.98670066	0.081	1.0456962	0.95630069	.136	1.0847153	.92190089
.027	1.0140171	.98617666	.082	1.0463370	.95571503	.137	1.0855068	.92122868
.028	1.0145572	.98565167	.083	1.0469800	.95512808	.138	1.0863017	.92055458
.029	1.0150989	.98512569	.084	1.0476253	.95453976	.139	1.0871000	.91987858
.030	1.0156421	.98459881	.085	1.0482729	.95395006	.140	1.0879018	.91920061
0.031	1.0161869	0.98407094	0.086	1.0489227	0.95335910	0.141	1.0887071	0.91852069
.032	1.0167333	.98354210	.087	1.0495748	.95276678	.142	1.0895160	.91783875
.033	1.0172814	.98301217	.088	1.0502292	.95217311	.143	1.0903284	.91715487
.034	1.0178311	.98248128	.089	1.0508859	.95157809	.144	1.0911444	.91646898
.035	1.0183825	.98194932	.090	1.0515449	.95098174	.145	1.0919640	.91578111
0.036	1.0189354	0.98141649	0.091	1.0522063	0.95038397	0.146	1.0927873	0.91509116
.037	1.0194900	.98088260	.092	1.0528701	.94978478	.147	1.0936143	.91439916
.038	1.0200462	.98034775	.093	1.0535362	.94918428	.148	1.0944450	.91370512
.039	1.0206042	.97981176	.094	1.0542048	.94858229	.149	1.0952795	.91300896
.040	1.0211638	.97927482	.095	1.0548758	.94797890	.150	1.0961178	.91231070
0.041	1.0217252	0.97873675	0.096	1.0555492	0.94737413	0.151	1.0969599	0.91161035
.042	1.0222882	.97819773	.097	1.0562251	.94676788	.152	1.0978058	.91090792
.043	1.0228530	.97765759	.098	1.0569034	.94616026	.153	1.0986557	.91020326
.044	1.0234194	.97711652	.099	1.0575842	.94555119	.154	1.0995095	.90949646
.045	1.0239876	.97657433	.100	1.0582675	.94494067	.155	1.1003674	.90878737
0.046	1.0245575	0.97603112	0.101	1.0589534	0.94432862	0.156	1.1012292	0.90807618
.047	1.0251292	.97548680	.102	1.0596418	.94371513	.157	1.1020950	.90736280
.048	1.0257027	.97494137	.103	1.0603327	.94310022	.158	1.1029650	.90664708
.049	1.0262780	.97439485	.104	1.0610263	.94248371	.159	1.1038391	.90592913
.050	1.0268550	.97384733	.105	1.0617225	.94186569	.160	1.1047174	.90520888
0.051	1.0274338	0.97329872	0.106	1.0624213	0.94124619	0.161	1.1055999	0.90448633
.052	1.0280145	.97274893	.107	1.0631227	.94062520	.162	1.1064866	.90376151
.053	1.0285970	.97219805	.108	1.0638268	.94000264	.163	1.1073777	.90303426
.054	1.0291813	.97164610	.109	1.0645336	.93937852	.164	1.1082731	.90230468
.055	1.0297674	.97109308	.110	1.0652431	.93875285	.165	1.1091730	.90157261

TABLE I - GENERAL DENSITY TABLE - Continued

(a) $\bar{\gamma} = 1.4$ - Concluded

$$\Sigma^2 = \left(1 - \frac{\varphi}{\Sigma^2}\right)^{-\frac{2}{\bar{\gamma}-1}}$$

5φ	$\frac{1}{\Sigma}$	Σ
0.166	1.1100772	0.90083825
.167	1.1109859	.90010143
.168	1.1118991	.89936218
.169	1.1128170	.89862035
.170	1.1137394	.89787611
0.171	1.1146665	0.89712932
.172	1.1155983	.89638000
.173	1.1165348	.89562815
.174	1.1174762	.89487364
.175	1.1184225	.89411649
0.176	1.1193737	0.89335670
.177	1.1203298	.89259431
.178	1.1212910	.89182915
.179	1.1222573	.89106126
.180	1.1232287	.89029064
0.181	1.1242053	0.88951724
.182	1.1251871	.88874108
.183	1.1261742	.88796209
.184	1.1271667	.88718022
.185	1.1281647	.88639540
0.186	1.1291681	0.88560773
.187	1.1301771	.88481708
.188	1.1311917	.88402346
.189	1.1322120	.88322682
.190	1.1332381	.88242709
0.191	1.1342699	0.88162438
.192	1.1353077	.88081848
.193	1.1363514	.88000948
.194	1.1374012	.87919724
.195	1.1384571	.87838180
0.196	1.1395191	0.87756318
.197	1.1405873	.87674131
.198	1.1416619	.87591607
.199	1.1427429	.87508748
.200	1.1438304	.87425548
0.201	1.1449245	0.87342004
.202	1.1460252	.87258116
.203	1.1471327	.87173873
.204	1.1482470	.87089276
.205	1.1493681	.87004329
0.206	1.1504963	0.86919011
.207	1.1516316	.86833324
.208	1.1527741	.86747265
.209	1.1539238	.86660835
.210	1.1550810	.86574015
0.211	1.1562457	0.86486808
.212	1.1574179	.86399217
.213	1.1585978	.86311229
.214	1.1597855	.86222840
.215	1.1609811	.86134046
0.216	1.1621847	0.86044843
.217	1.1633964	.85955226
.218	1.1646164	.85865183
.219	1.1658447	.85774718
.220	1.1670816	.85683812
0.221	1.1683271	0.85592468
.222	1.1695813	.85500683
.223	1.1708444	.85408445
.224	1.1721164	.85315759
.225	1.1733975	.85222612
0.226	1.1746880	0.85128987
.227	1.1759880	.85034881
.228	1.1772974	.84940305
.229	1.1786165	.84845240
.230	1.1799455	.84749677
0.231	1.1812846	0.84653605
.232	1.1826339	.84557021
.233	1.1839935	.84459923
.234	1.1853636	.84362300
.235	1.1867445	.84264136
0.236	1.1881362	0.84165435
.237	1.1895390	.84066180
.238	1.1909530	.83966370
.239	1.1923785	.83865987
.240	1.1938156	.83765030
0.241	1.1952645	0.83663490
.242	1.1967255	.83561351
.243	1.1981988	.83458605
.244	1.1996846	.83355242
.245	1.2011831	.83251255
0.246	1.2026946	0.83146628
.247	1.2042193	.83041353
.248	1.2057574	.82935423
.249	1.2073092	.82828823
.250	1.2088750	.82721539
0.251	1.2104551	0.82613556
.252	1.2120497	.82504868
.253	1.2136591	.82395460
.254	1.2152836	.82285320
.255	1.2169235	.82174434
0.256	1.2185792	0.82062783
.257	1.2202510	.81950353
.258	1.2219392	.81837132
.259	1.2236442	.81723102
.260	1.2253663	.81608251
0.261	1.2271059	0.81492559
.262	1.2288634	.81376010
.263	1.2306393	.81258578
.264	1.2324338	.81140261
.265	1.2342475	.81021027
0.266	1.2360808	0.80900860
.267	1.2379342	.80779738
.268	1.2398081	.80657644
.269	1.2417032	.80534543
.270	1.2436198	.80410428
0.271	1.2455586	0.80285263
.272	1.2475200	.80159036
.273	1.2495048	.80031705
.274	1.2515134	.79903260
.275	1.2535466	.79773660
0.276	1.2556050	0.79642881
.277	1.2576894	.79510887
.278	1.2598004	.79377654
.279	1.2619389	.79243139
.280	1.2641055	.79107321
0.281	1.2663012	0.78970153
.282	1.2685268	.78831602
.283	1.2707833	.78691623
.284	1.2730715	.78550184
.285	1.2753927	.78407223
0.286	1.2777476	0.78262718
.287	1.2801376	.78116602
.288	1.2825638	.77968831
.289	1.2850276	.77819340
.290	1.2875299	.77668099
0.291	1.2900725	0.77515023
.292	1.2926566	.77360066
.293	1.2952840	.77203146
.294	1.2979563	.77044196
.295	1.3006755	.76883127
0.296	1.3034429	0.76719893
.297	1.3062609	.76554385
.298	1.3091314	.76386526
.299	1.3120571	.76216195
.300	1.3150400	.76043314
0.301	1.3180832	0.75867745
.302	1.3211890	.75689398
.303	1.3243612	.75508102
.304	1.3276021	.75323774
.305	1.3309163	.75136205
0.306	1.3343067	0.74945288
.307	1.3377787	.74750779
.308	1.3413356	.74552558
.309	1.3449840	.74350327
.310	1.3487277	.74143951
0.311	1.3525748	0.73933065
.312	1.3565299	.73717505
.313	1.3606032	.73496814
.314	1.3648001	.73270804
.315	1.3691338	.73038880
0.316	1.3736105	0.72800841
.317	1.3782479	.72555888
.318	1.3830531	.72303804
.319	1.3880508	.72043473
.320	1.3932489	.71774684
0.321	1.3986833	0.71495813
.322	1.4043617	.71206727
.323	1.4103403	.70904873
.324	1.4166227	.70590426
.325	1.4233067	.70258926
0.326	1.4303770	0.69911639
.327	1.4380371	.69539235
.328	1.4461815	.69147614
.329	1.4554567	.68706956
.330	1.4650468	.68257205

TABLE I - GENERAL DENSITY TABLE - Continued

(b) $\bar{\gamma} = 4/3$

$$\Sigma^2 = \left(1 - \frac{\varphi}{\Sigma^2}\right)^{-\frac{2}{\bar{\gamma}-1}}$$

6φ	$\frac{1}{\Sigma}$	Σ	6φ	$\frac{1}{\Sigma}$	Σ	6φ	$\frac{1}{\Sigma}$	Σ
0.001	1.0005006	0.99949965	0.056	1.0303226	0.97056980	0.111	1.0657881	0.93827281
.002	1.0010026	.99899840	.057	1.0309112	.97001565	.112	1.0664991	.93764730
.003	1.0015060	.99849626	.058	1.0315016	.96946044	.113	1.0672128	.93702025
.004	1.0020107	.99799333	.059	1.0320939	.96890409	.114	1.0679293	.93639158
.005	1.0025168	.99748952	.060	1.0326880	.96834668	.115	1.0686486	.93576130
0.006	1.0030242	0.99698492	0.061	1.0332840	0.96778814	0.116	1.0693706	0.93512951
.007	1.0035330	.99647944	.062	1.0338819	.96722846	.117	1.0700954	.93449612
.008	1.0040432	.99597308	.063	1.0344817	.96666766	.118	1.0708230	.93386115
.009	1.0045548	.99546585	.064	1.0350835	.96610563	.119	1.0715534	.93322461
.010	1.0050678	.99495775	.065	1.0356872	.96554249	.120	1.0722867	.93258641
0.011	1.0055822	0.99444879	0.066	1.0362928	0.96497824	0.121	1.0730229	0.93194656
.012	1.0060980	.99393896	.067	1.0369003	.96441288	.122	1.0737620	.93130508
.013	1.0066152	.99342827	.068	1.0375099	.96384622	.123	1.0745040	.93066196
.014	1.0071339	.99291663	.069	1.0381215	.96327838	.124	1.0752489	.93001723
.015	1.0076541	.99240404	.070	1.0387350	.96270945	.125	1.0759968	.92937079
0.016	1.0081756	0.99189070	0.071	1.0393506	0.96213924	0.126	1.0767477	0.92872267
.017	1.0086985	.99137651	.072	1.0399681	.96156796	.127	1.0775017	.92807278
.018	1.0092230	.99086129	.073	1.0405876	.96099550	.128	1.0782587	.92742122
.019	1.0097490	.99034513	.074	1.0412093	.96042169	.129	1.0790187	.92676800
.020	1.0102764	.98982813	.075	1.0418331	.95984664	.130	1.0797818	.92611304
0.021	1.0108053	0.98931021	0.076	1.0424589	0.95927043	0.131	1.0805481	0.92545626
.022	1.0113357	.98879136	.077	1.0430867	.95869308	.132	1.0813175	.92479776
.023	1.0118676	.98827159	.078	1.0437167	.95811440	.133	1.0820901	.92413746
.024	1.0124010	.98775090	.079	1.0443488	.95753449	.134	1.0828659	.92347538
.025	1.0129359	.98722930	.080	1.0449830	.95695337	.135	1.0836449	.92281152
0.026	1.0134723	0.98670679	0.081	1.0456194	0.95637093	0.136	1.0844271	0.92214590
.027	1.0140104	.98618318	.082	1.0462580	.95578720	.137	1.0852126	.92147843
.028	1.0145499	.98565876	.083	1.0468987	.95520226	.138	1.0860015	.92080904
.029	1.0150910	.98513335	.084	1.0475416	.95461603	.139	1.0867937	.92013783
.030	1.0156336	.98460705	.085	1.0481868	.95402842	.140	1.0875893	.91946473
0.031	1.0161778	.98407975	0.086	1.0488341	0.95343963	0.141	1.0883882	0.91878982
.032	1.0167236	.98355148	.087	1.0494837	.95284948	.142	1.0891906	.91811295
.033	1.0172710	.98302222	.088	1.0501355	.95225807	.143	1.0899965	.91743414
.034	1.0178200	.98249199	.089	1.0507896	.95166530	.144	1.0908058	.91675347
.035	1.0183707	.98196069	.090	1.0514460	.95107119	.145	1.0916187	.91607079
0.036	1.0189229	0.98142853	0.091	1.0521047	0.95047575	0.146	1.0924351	0.91538619
.037	1.0194767	.98089539	.092	1.0527657	.94987897	.147	1.0932551	.91469960
.038	1.0200322	.98036121	.093	1.0534290	.94928087	.148	1.0940787	.91401103
.039	1.0205894	.97982597	.094	1.0540947	.94868137	.149	1.0949059	.91332050
.040	1.0211482	.97928978	.095	1.0547628	.94808046	.150	1.0957368	.91262792
0.041	1.0217087	0.97875255	0.096	1.0554332	0.94747825	0.151	1.0965714	0.91193332
.042	1.0222708	.97821438	.097	1.0561061	.94687456	.152	1.0974098	.91123662
.043	1.0228346	.97767518	.098	1.0567813	.94626958	.153	1.0982520	.91053784
.044	1.0234001	.97713494	.099	1.0574590	.94566314	.154	1.0990979	.90983706
.045	1.0239673	.97659369	.100	1.0581391	.94505533	.155	1.0999477	.90913413
0.046	1.0245363	0.97605131	0.101	1.0588217	0.94444608	0.156	1.1008014	0.90842908
.047	1.0251070	.97550792	.102	1.0595068	.94383538	.157	1.1016591	.90772182
.048	1.0256794	.97496352	.103	1.0601944	.94322324	.158	1.1025207	.90701245
.049	1.0262536	.97441802	.104	1.0608846	.94260959	.159	1.1033863	.90630090
.050	1.0268295	.97387151	.105	1.0615773	.94199452	.160	1.1042559	.90558719
0.051	1.0274072	0.97332392	0.106	1.0622726	0.94137795	0.161	1.1051296	0.90487125
.052	1.0279867	.97277523	.107	1.0629704	.94075997	.162	1.1060074	.90415308
.053	1.0285679	.97222556	.108	1.0636709	.94014041	.163	1.1068894	.90343263
.054	1.0291510	.97167471	.109	1.0643740	.93951938	.164	1.1077756	.90270990
.055	1.0297359	.97112279	.110	1.0650797	.93889687	.165	1.1086660	.90198491

TABLE I - GENERAL DENSITY TABLE - Concluded

(b) $\bar{\gamma} = 4/3$ - Concluded

$$\Sigma^2 = \left(1 - \frac{\varphi}{\Sigma^2}\right)^{-\frac{2}{\bar{\gamma}-1}}$$

6φ	$\frac{1}{\Sigma}$	Σ	6φ	$\frac{1}{\Sigma}$	Σ	6φ	$\frac{1}{\Sigma}$	Σ
0.166	1.1095607	0.90125759	0.221	1.1669283	0.85695068	0.276	1.2514571	0.79906854
.167	1.1104597	.90052795	.222	1.1681568	.85604946	.277	1.2534457	.79780081
.168	1.1113630	.89979602	.223	1.1693937	.85514399	.278	1.2554579	.79652213
.169	1.1122708	.89906163	.224	1.1706391	.85423424	.279	1.2574944	.79523217
.170	1.1131830	.89832489	.225	1.1718931	.85332015	.280	1.2595556	.79393081
0.171	1.1140997	0.89758574	0.226	1.1731558	0.85240170	0.281	1.2616424	0.79261762
.172	1.1150210	.89684410	.227	1.1744273	.85147884	.282	1.2637555	.79129230
.173	1.1159468	.89610006	.228	1.1757079	.85055140	.283	1.2658957	.78995450
.174	1.1168773	.89535350	.229	1.1769977	.84961933	.284	1.2680636	.78860398
.175	1.1178125	.89460442	.230	1.1782966	.84868275	.285	1.2702602	.78724028
0.176	1.1187524	0.89385283	0.231	1.1796049	084774148	0.286	1.2724861	0.78586320
.177	1.1196971	.89309868	.232	1.1809228	.84679540	.287	1.2747424	.78447222
.178	1.1206466	.89234197	.233	1.1822504	.84584450	.288	1.2770299	.78306702
.179	1.1216010	.89158266	.234	1.1835879	.84488866	.289	1.2793498	.78164705
.180	1.1225603	.89082074	.235	1.1849354	.84392786	.290	1.2817028	.78021207
0.181	1.1235246	0.89005617	0.236	1.1862930	0.84296207	0.291	1.2840902	0.77876149
.182	1.1244940	.88928887	.237	1.1876610	.84199111	.292	1.2865130	.77729490
.183	1.1254685	.88851887	.238	1.1890394	.84101502	.293	1.2889726	.77581168
.184	1.1264481	.88774618	.239	1.1904285	.84003365	.294	1.2914700	.77431144
.185	1.1274329	.88697075	.240	1.1918285	.83904689	.295	1.2940068	.77279347
0.186	1.1284230	0.88619250	0.241	1.1932395	0.83805472	0.296	1.2965843	0.77125722
.187	1.1294184	.88541146	.242	1.1946617	.83705705	.297	1.2992041	.76970200
.188	1.1304192	.88462758	.243	1.1960954	.83605371	.298	1.3018675	.76812732
.189	1.1314255	.88384078	.244	1.1975406	.83504476	.299	1.3045765	.76653228
.190	1.1324372	.88305117	.245	1.1989976	.83403003	.300	1.3073325	.76491635
0.191	1.1334545	0.88225862	0.246	1.2004666	0.83300943	0.301	1.3101379	0.76327843
.192	1.1344774	.88146313	.247	1.2019479	.83198282	.302	1.3129943	.76161793
.193	1.1355061	.88066458	.248	1.2034416	.83095017	.303	1.3159043	.75993368
.194	1.1365405	.87986306	.249	1.2049480	.82991133	.304	1.3188697	.75822502
.195	1.1375807	.87905851	.250	1.2064673	.82886623	.305	1.3218935	.75649059
0.196	1.1386269	0.87825081	0.251	1.2079997	0.82781478	0.306	1.3249779	0.75472957
.197	1.1396790	.87744005	.252	1.2095455	.82675683	.307	1.3281263	.75294044
.198	1.1407372	.87662610	.253	1.2111050	.82569224	.308	1.3313412	.75112225
.199	1.1418015	.87580897	.254	1.2126783	.82462101	.309	1.3346266	.74927324
.200	1.1428719	.87498870	.255	1.2142658	.82354292	.310	1.3379854	.74739231
0.201	1.1439486	0.87416515	0.256	1.2158677	0.82245790	0.311	1.3414224	0.74547734
.202	1.1450317	.87333827	.257	1.2174844	.82136576	.312	1.3449408	.74352715
.203	1.1461212	.87250807	.258	1.2191161	.82026642	.313	1.3485465	.74153913
.204	1.1472172	.87167452	.259	1.2207632	.81915969	.314	1.3522432	.73951195
.205	1.1483197	.87083762	.260	1.2224259	.81804549	.315	1.3560384	.73744224
0.206	1.1494289	0.86999727	0.261	1.2241045	0.81692372	0.316	1.3599361	0.73532867
.207	1.1505449	.86915339	.262	1.2257994	.81579417	.317	1.3639457	.73316702
.208	1.1516677	.86830602	.263	1.2275110	.81465665	.318	1.3680720	.73095568
.209	1.1527975	.86745504	.264	1.2292396	.81351105	.319	1.3723269	.72868935
.210	1.1539342	.86660054	.265	1.2309855	.81235725	.320	1.3767161	.72636617
0.211	1.1550780	0.86574240	0.266	1.2327492	0.81119501	0.321	1.3812551	0.72397923
.212	1.1562290	.86488057	.267	1.2345310	.81002421	.322	1.3859506	.72152644
.213	1.1573873	.86401501	.268	1.2363314	.80884462	.323	1.3908236	.71899844
.214	1.1585530	.86314567	.269	1.2381508	.80765606	.324	1.3958818	.71639304
.215	1.1597262	.86227249	.270	1.2399896	.80645838	.325	1.4011550	.71369691
0.216	1.1609069	0.86139552	0.271	1.2418483	0.80525133	0.326	1.4066513	0.71090824
.217	1.1620953	.86051462	.272	1.2437273	.80403478	.327	1.4124156	.70800691
.218	1.1632916	.85962969	.273	1.2456273	.80280835	.328	1.4184546	.70499260
.219	1.1644958	.85874075	.274	1.2475485	.80157204	.329	1.4248420	.70183220
.220	1.1657080	.85784776	.275	1.2494916	.80032551	.330	1.4315749	.69853139

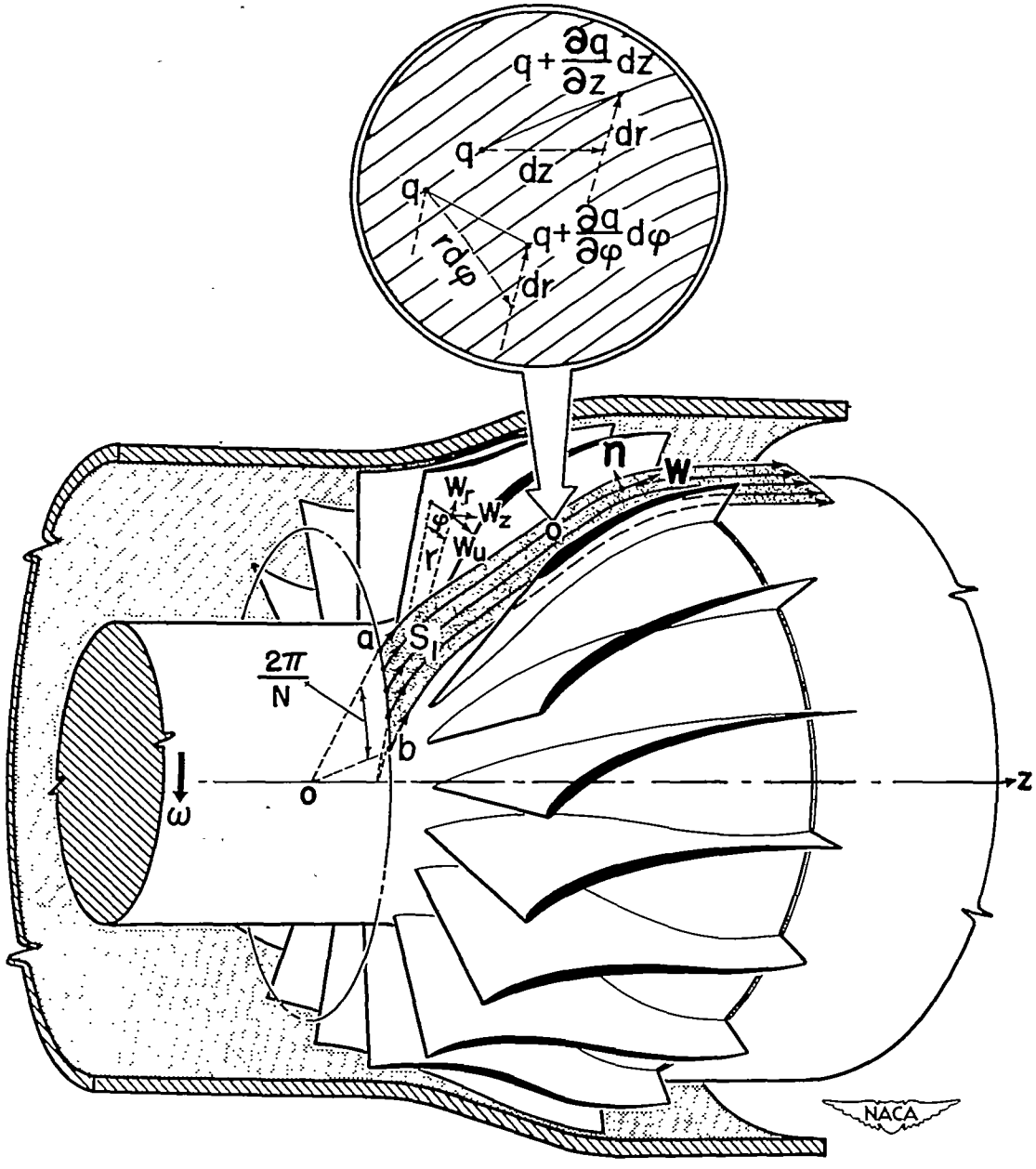

Figure 1. - Relative stream surface S_1.

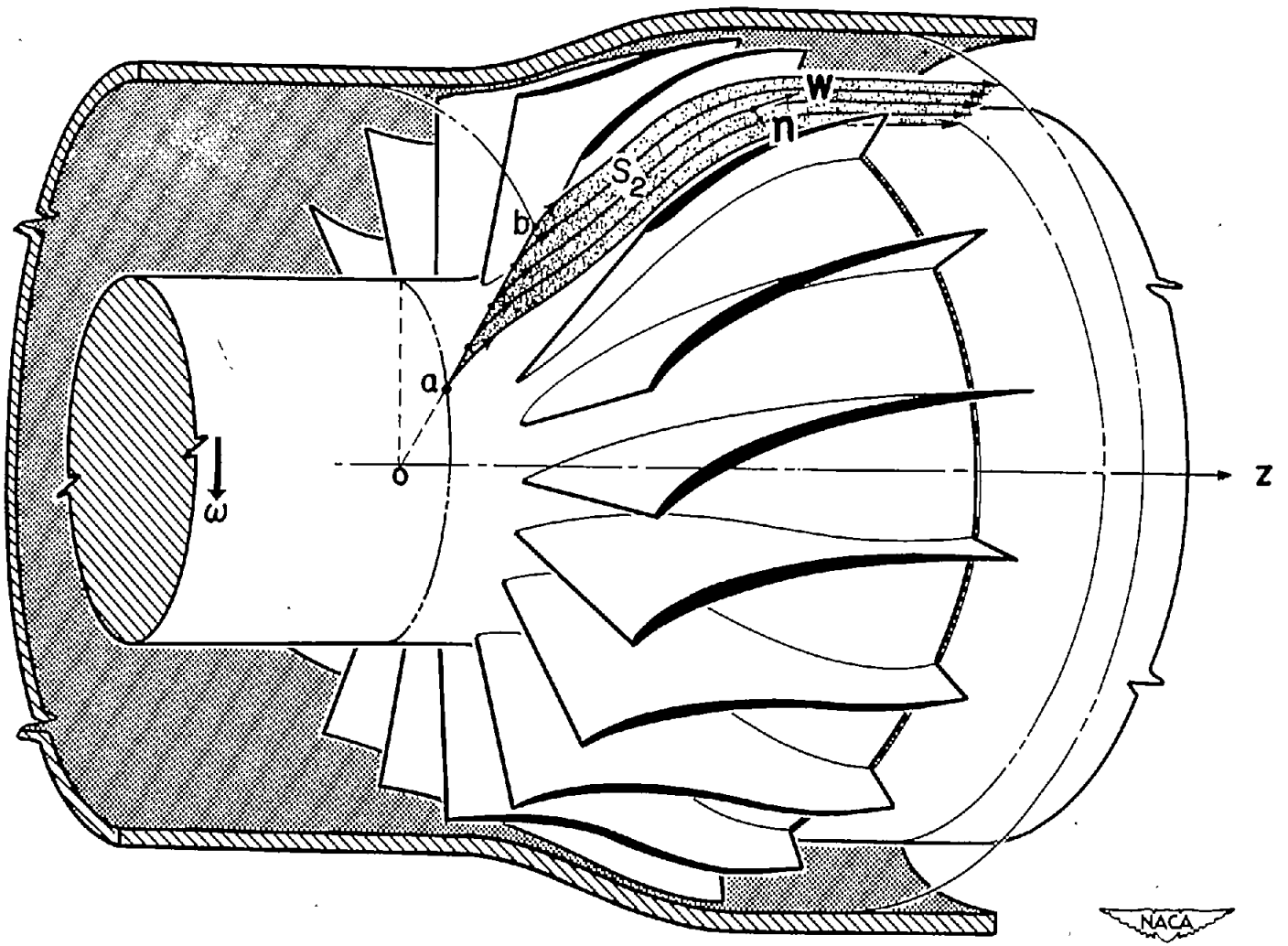

Figure 2. - Relative stream surface S_2.

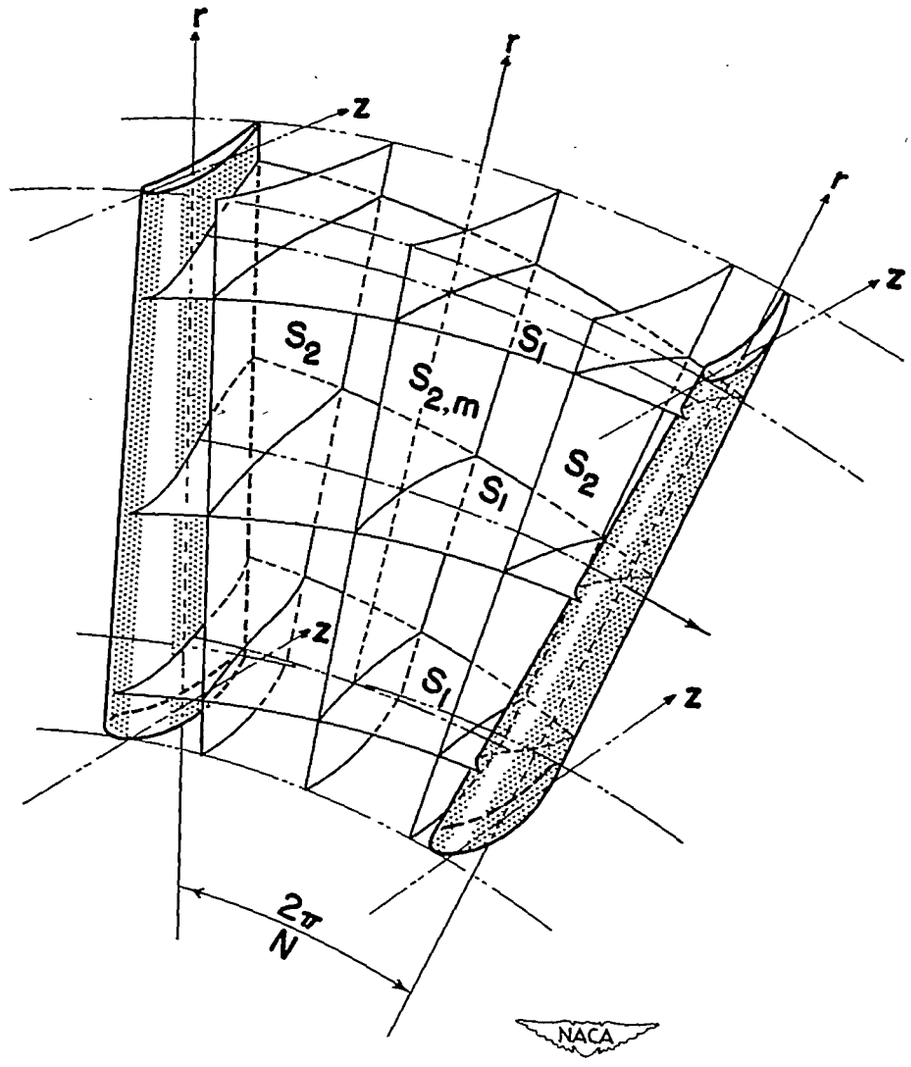

Figure 3. - Intersecting S_1 and S_2 surfaces in a blade row.

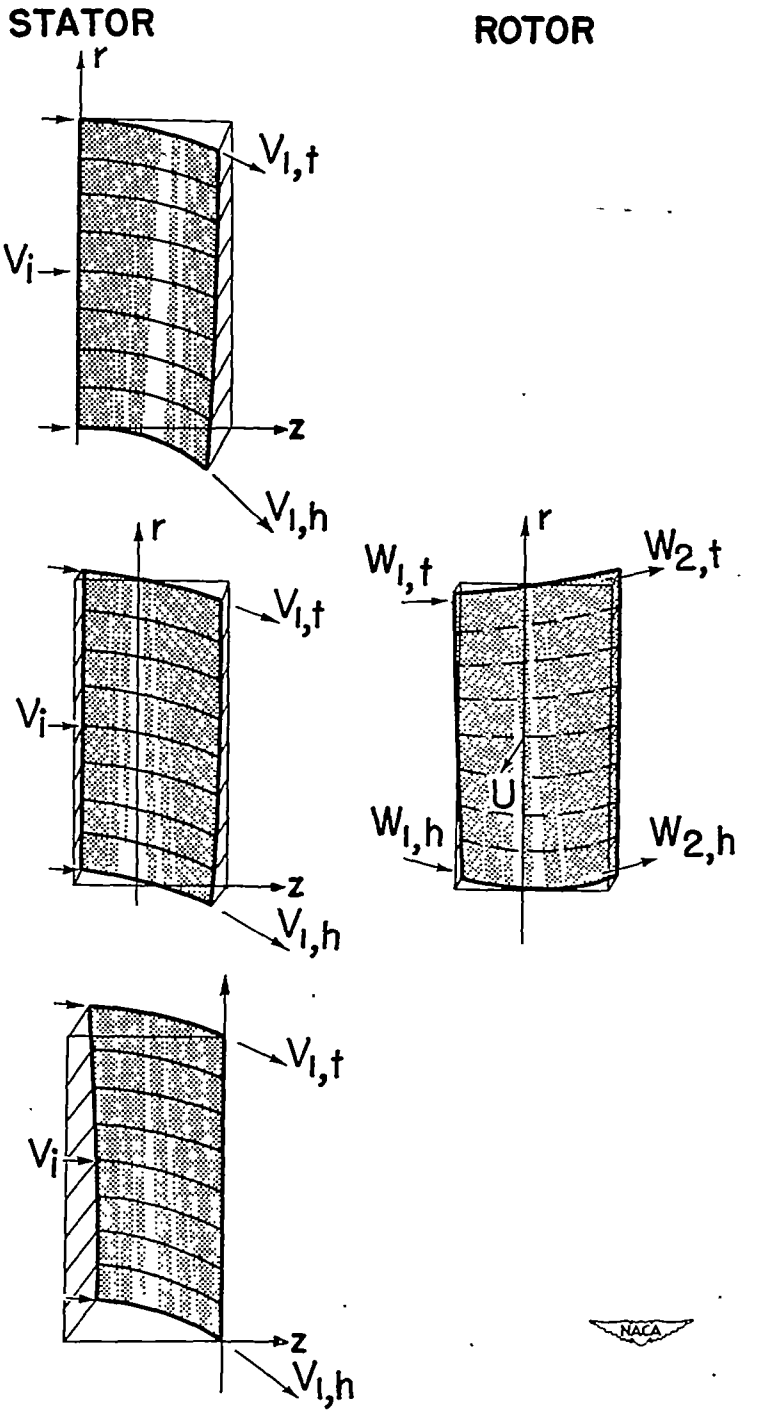

Figure 4. - Mean stream surfaces for axial-flow gas turbine.

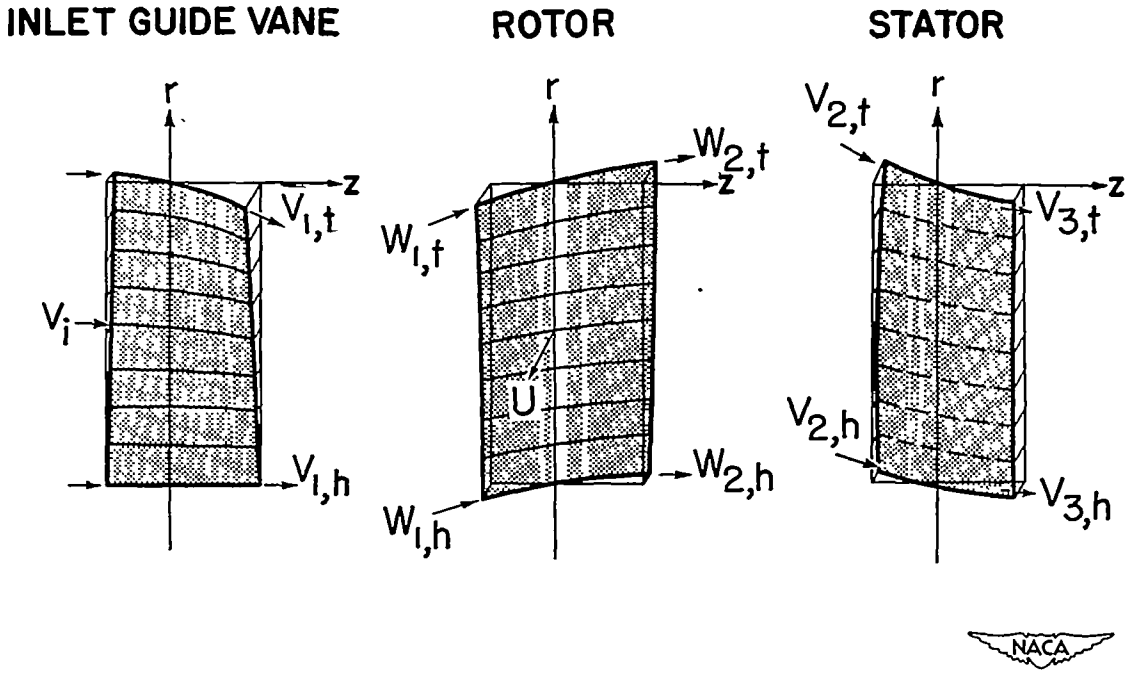

Figure 5. - Mean stream surfaces for inlet stage of axial-flow compressor.

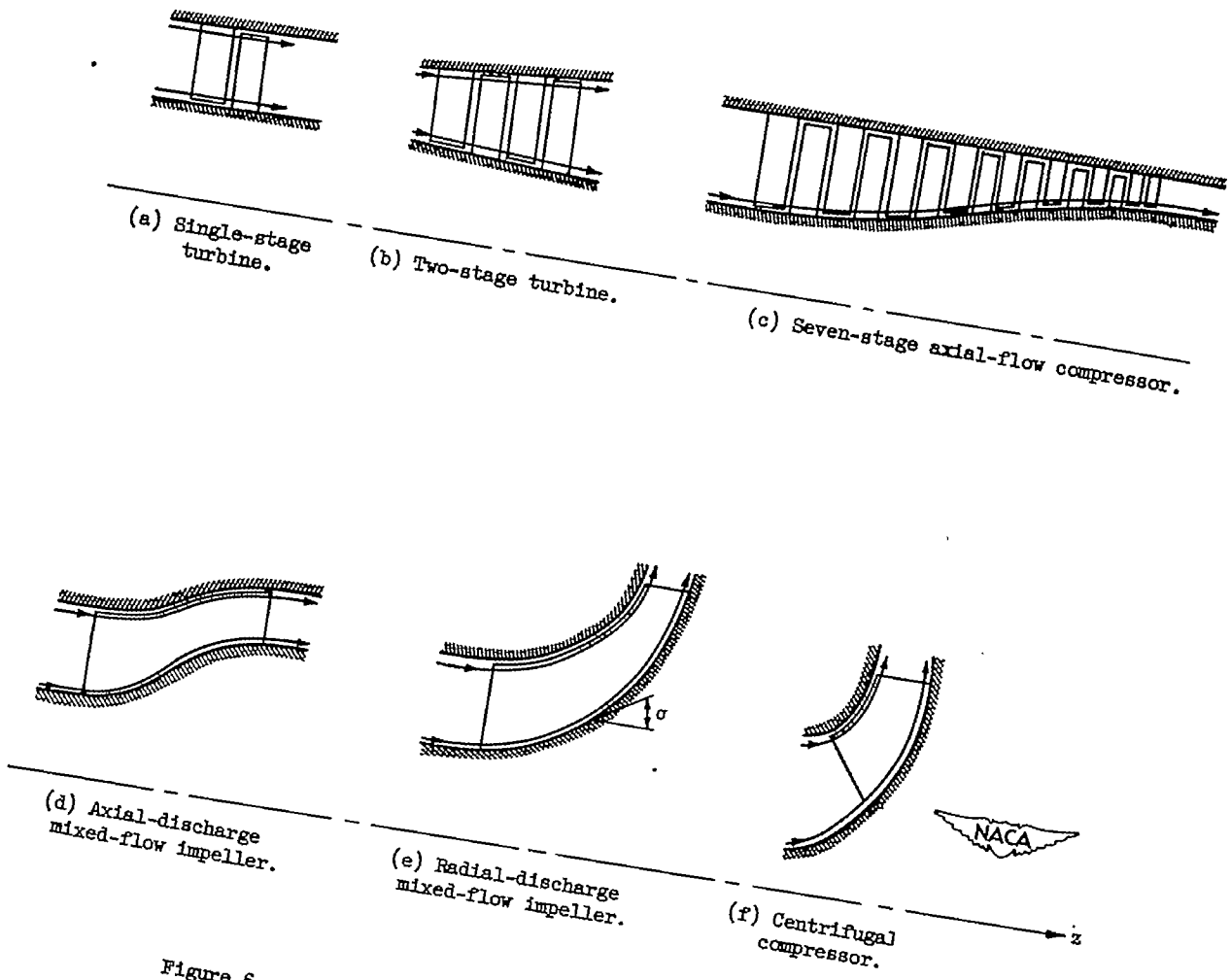

(a) Single-stage turbine.

(b) Two-stage turbine.

(c) Seven-stage axial-flow compressor.

(d) Axial-discharge mixed-flow impeller.

(e) Radial-discharge mixed-flow impeller.

(f) Centrifugal compressor.

Figure 6. - Axial-, radial-, and mixed-flow turbomachines.

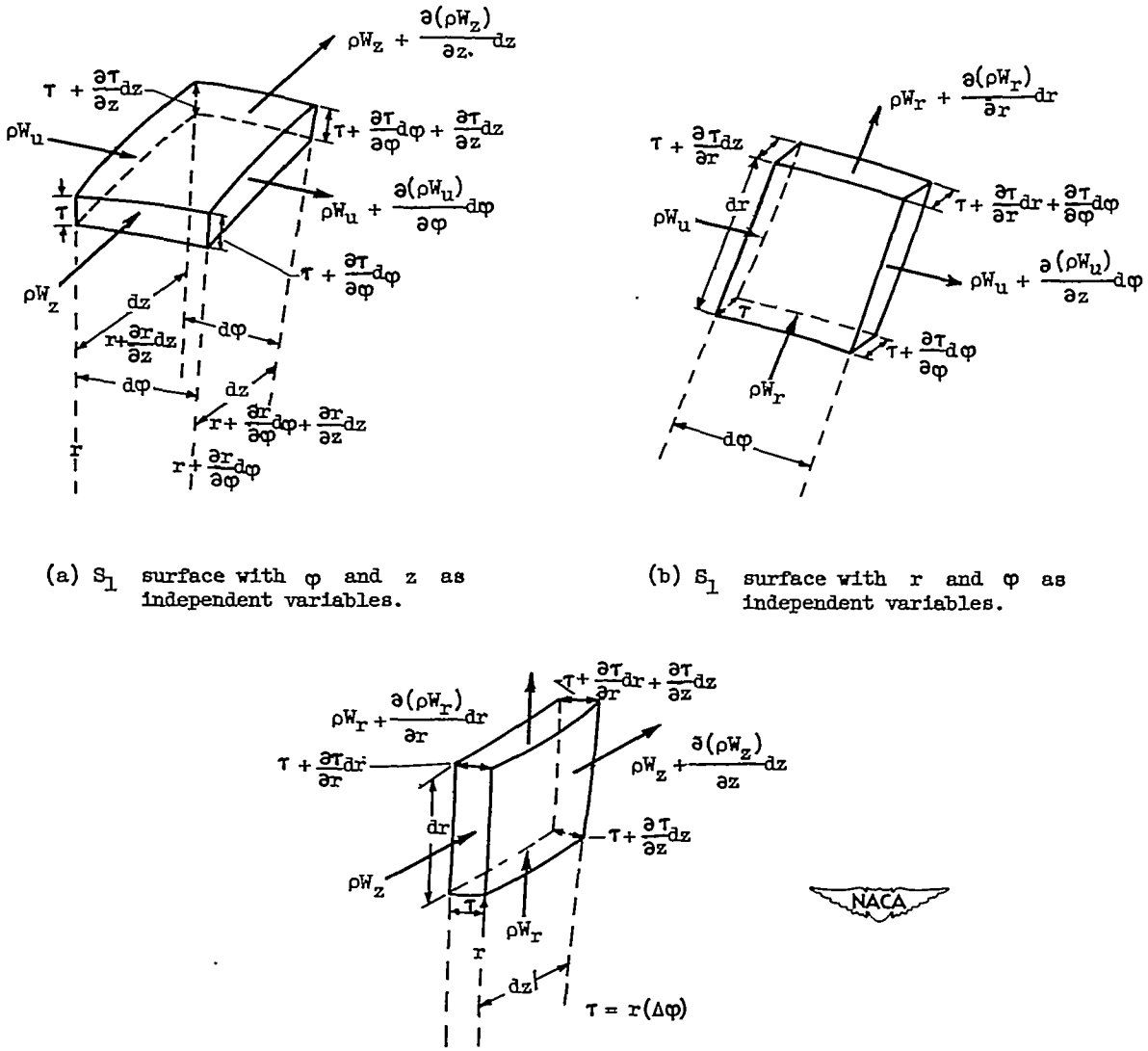

(a) S_1 surface with φ and z as independent variables.

(b) S_1 surface with r and φ as independent variables.

(c) S_2 surface with r and z as independent variables.

Figure 7. - Elements of stream sheet.

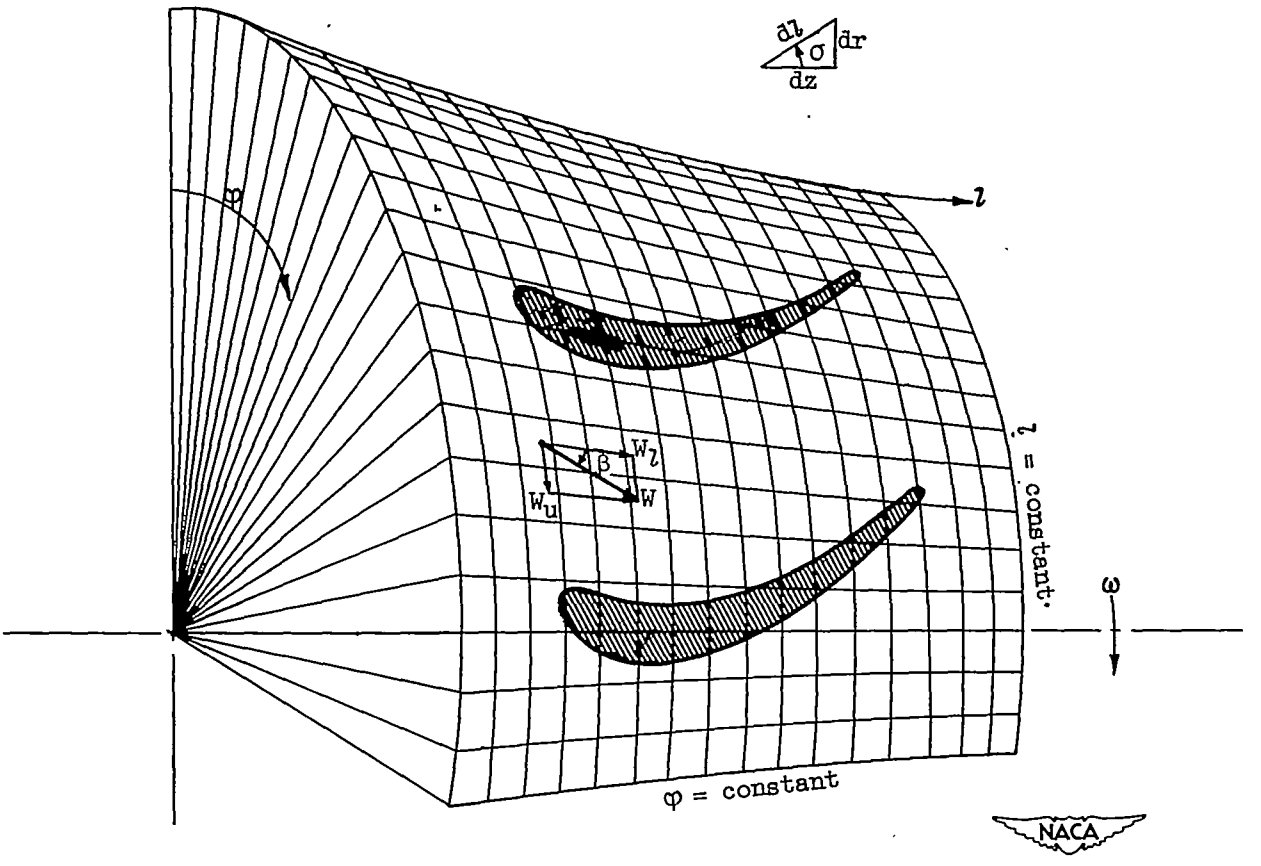

Figure 8. - Orthogonal coordinates for surface of revolution.

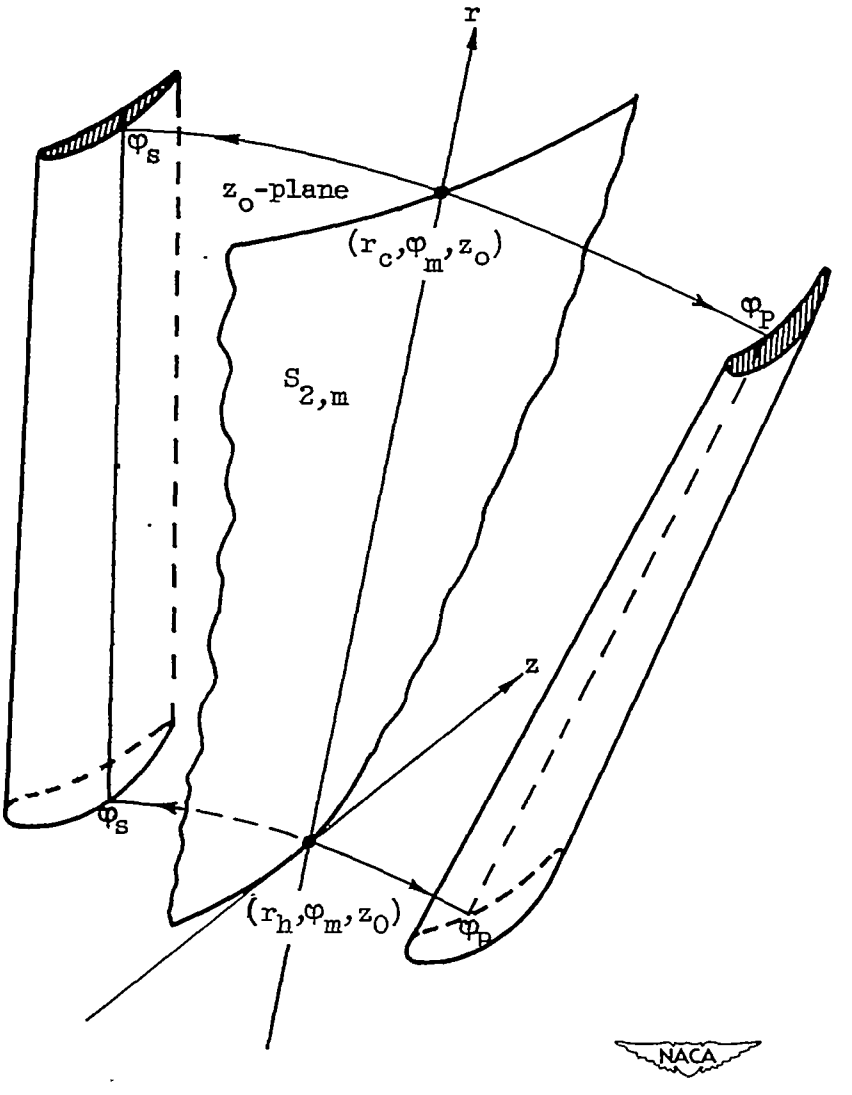

Figure 9. - Relation between mean stream surface and blade surfaces.

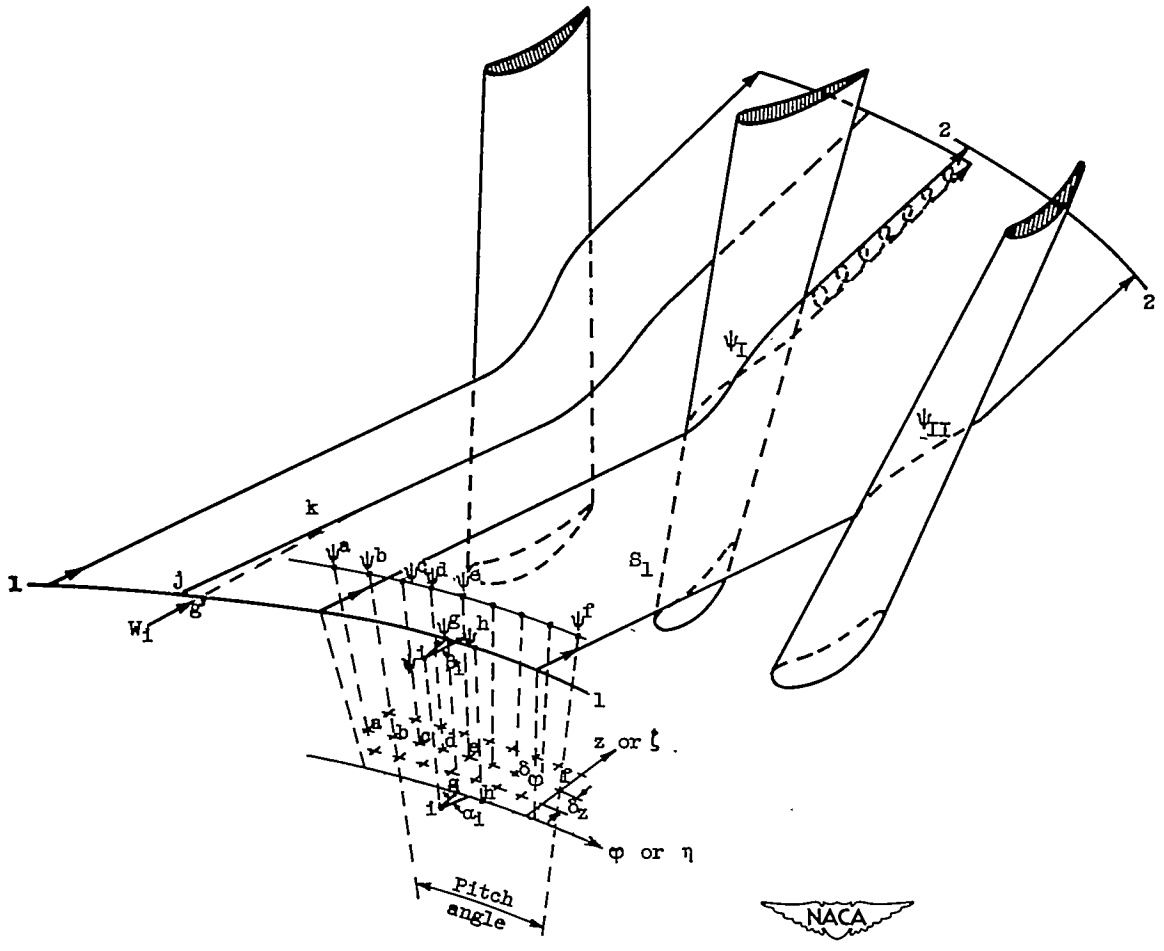

Figure 10. - Grid system and boundary conditions for general S_1 surface (elliptic case).

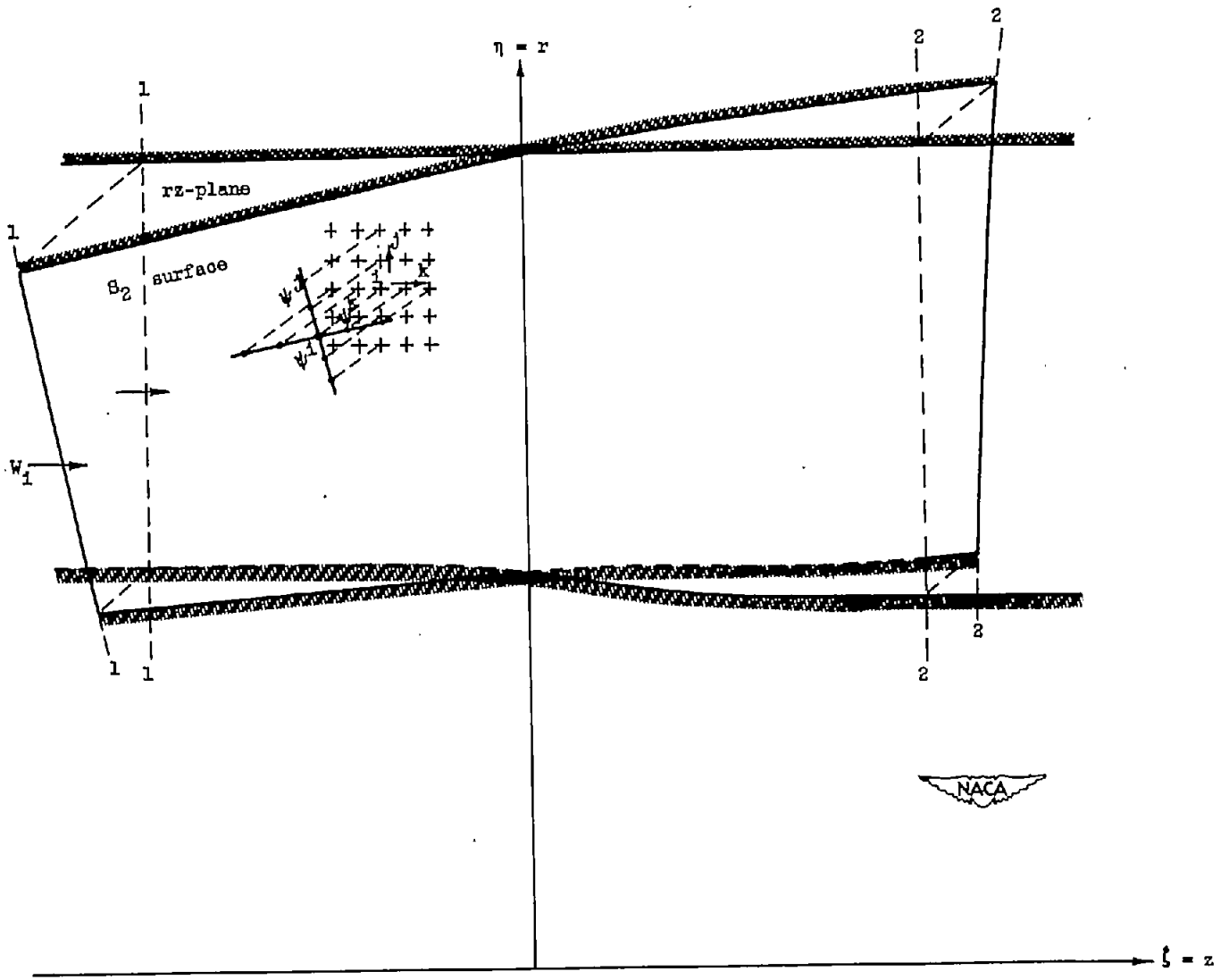

Figure 11. - Grid system and boundary conditions for general S_2 surface (elliptic case).

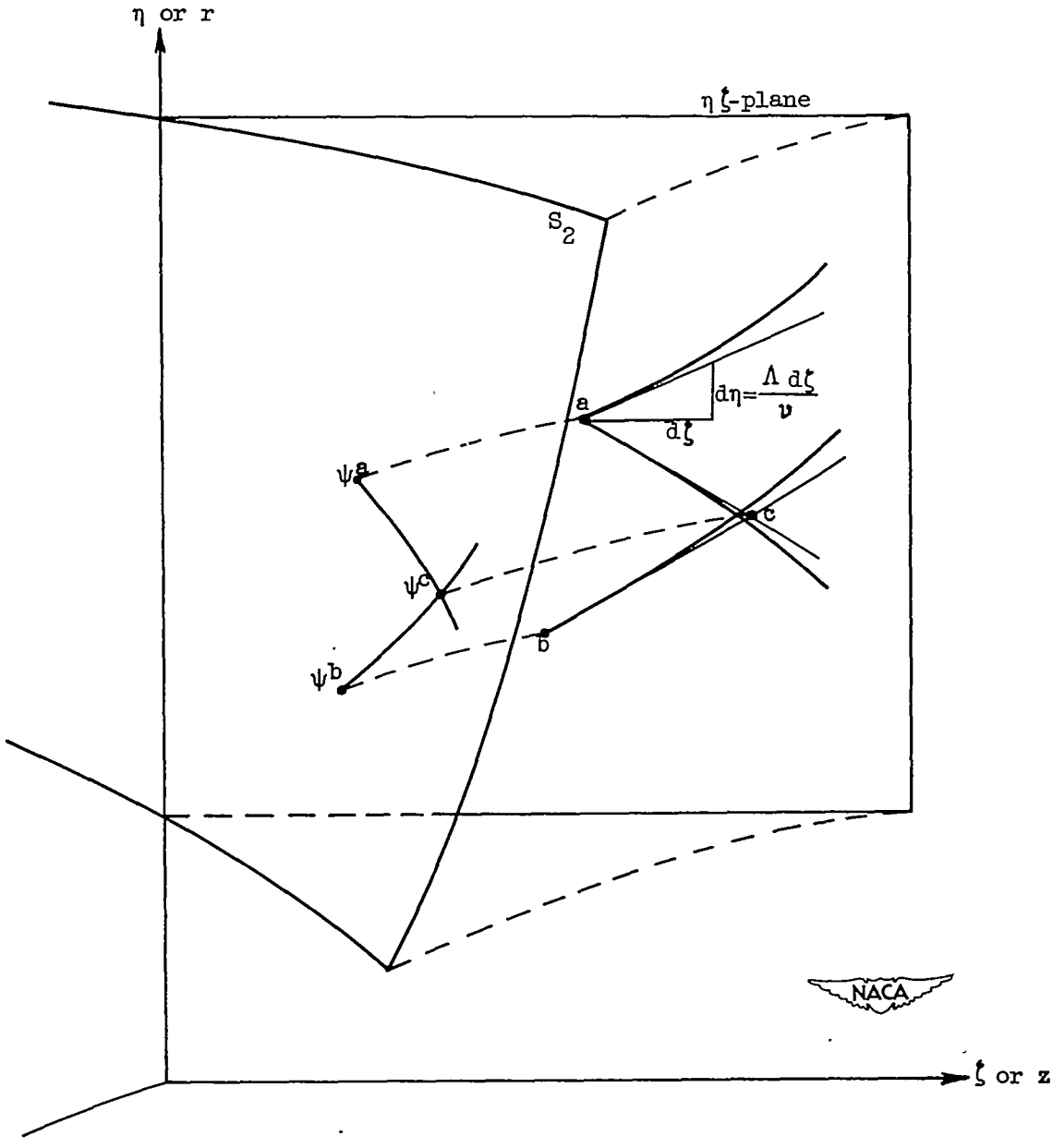

Figure 12. - Characteristic system for hyperbolic case.

NACA - Langley Field, Va.