0668
NACA TN 2614

TECH LIBRARY KAFB, NM
0065737

NATIONAL ADVISORY COMMITTEE FOR AERONAUTICS

TECHNICAL NOTE 2614

ANALYTICAL INVESTIGATION OF SOME THREE-DIMENSIONAL FLOW PROBLEMS IN TURBOMACHINES

By Frank E. Marble and Irving Michelson

California Institute of Technology

Washington
March 1952

AFMDC
TECHNICAL LIBRARY
AFL 2811

TECH LIBRARY KAFB, NM
0065737

NACA TN 2614

ANALYTICAL INVESTIGATION OF SOME
THREE-DIMENSIONAL FLOW PROBLEMS
IN TURBOMACHINES

By Frank E. Marble and Irving Michelson

March 1952

Page 12, equations (4), (5), and (6) should read:

$$v\zeta - w\eta = -F_r + \frac{\partial H}{\partial r} \tag{4}$$

$$w\xi - u\zeta = -F_\theta \tag{5}$$

$$u\eta - v\xi = -F_z + \frac{\partial H}{\partial z} \tag{6}$$

NATIONAL ADVISORY COMMITTEE FOR AERONAUTICS

TECHNICAL NOTE 2614

ANALYTICAL INVESTIGATION OF SOME THREE-DIMENSIONAL FLOW PROBLEMS IN TURBOMACHINES

By Frank E. Marble and Irving Michelson

SUMMARY

One problem encountered in the theory of turbomachines is that of calculating the fluid velocity components when the inner and outer boundaries of the machine as well as the shape of or forces imparted by the blade row are given. The present paper discusses this problem under the restrictions that the fluid is inviscid and incompressible and that the blade rows consist of an infinite number of infinitely thin blades so that axially symmetric flow is assumed.

It is shown, in general, that the velocity components in a plane through the turbomachine axis may be expressed in terms of the angular momentum and the leading-edge blade force normal to the stream surfaces. The relation is a nonlinear differential equation to which analytic solutions may be obtained conveniently only after the introduction of linearizing assumptions. A quite accurate linearization is effected through assuming an approximate shape of the stream surfaces in certain nonlinear terms.

The complete linearized solution for the axial turbomachine is given in such form that blade loading, blade shape, distribution of angular momentum, or distribution of total head may be prescribed. Calculations for single blade rows of aspect ratio 2 and 2/3 are given for a radius ratio of 0.6. They indicate that the process of formation of the axial velocity profile may extend both upstream and downstream of a high-aspect-ratio blade row, while for low aspect ratios the major portion of the three-dimensional flow occurs within the blade row itself. When the through-flow velocity varies greatly from its mean value, the simple linearized solution does not describe the flow process adequately and a more accurate solution applicable to such conditions is suggested.

The structure of the first-order linearized solution for the axial turbomachine suggested a further approximation employing a minimizing operation. The simplicity of this solution permits the discussion of three interesting problems: Mutual interference of neighboring blade rows in a multistage axial turbomachine, solution for a single blade row of given blade shape, and the solution for this blade row operating at a condition different from the design condition.

It is found that the interference of adjacent blade rows in the multistage turbomachine may be neglected when the ratio of blade length to the distance between centers of successive blade rows is 1.0 or less. For values of this ratio in excess of 3.0, the interference may be an important influence. The solution for the single blade row indicated that, for the blade shape considered, the distortion of the axial velocity profile caused by off-design operation is appreciably less for low- than for high-aspect-ratio blades.

To obtain some results for a mixed-flow turbomachine comparable with those for the axial turbomachine as well as to indicate the essential versatility of the method of linearizing the general equations, completely analogous theoretical treatment is given for a turbomachine whose inner and outer walls are concentric cones with common apex and whose flow is that of a three-dimensional source or sink. A particular example for a single rotating blade row is discussed where the angular momentum is prescribed similarly to that used in the examples for the axial turbomachine.

INTRODUCTION

Early investigations of the flow through turbomachines were concerned primarily with the flow through a typical annulus of small radial extent and hence treated the flow as essentially two-dimensional. The work of Betz (reference 1), Weinig (reference 2), and Keller (reference 3) employs this approach and is of particular importance inasmuch as it emphasizes the aerodynamic concepts of the blade-airfoil sections and airfoil cascades in contrast with the older but still useful point of view which regards the space between two blades as a sort of channel and treats the flow accordingly. Out of the aerodynamic approach grew the present extensive theoretical literature on arbitrary airfoil grids or cascades characterized by the work of Kawada (reference 4), Pistolesi (reference 5), Garrick (reference 6), and Lighthill (reference 7). These concepts have also exerted considerable influence on the experimental investigation of turbomachines, for much of the useful experimental information has appeared as results of tests on airfoil cascades such as those of Christiani (reference 8), Shimoyama (reference 9), and Bogdonoff (reference 10).

This "annulus" theory of turbomachines assumes negligible interference between the flow in adjacent and neighboring annular regions. Such conditions are fulfilled rigorously only in the so-called vortex turbomachine, in which the tangential velocity distribution is everywhere that of a potential vortex. The behavior of a blade operating in or imparting this type of flow has certain properties in common with the rectilinear flow past a uniform infinite wing in that no trailing

vortices are shed in either case, the flow downstream of the airfoils being irrotational. The flow in this variety of turbomachine is restricted to one of constant stagnation enthalpy in any plane normal to the axis of revolution and to the particular distribution of tangential velocity. This is a rather severe limitation and more general distributions of both enthalpy and tangential velocity seem very desirable.

Complications in the more general treatment arise, however, because a variation of stagnation enthalpy in the radial direction or a variation of the tangential velocity from that of a potential vortex usually implies a variation of the axial velocity. Consequently, although it seems reasonable that the results of the cascade theory and experiment are nearly valid for this case, there is a question as to the free-stream flow in which the cascade should be situated so as to correspond with the local conditions it experiences within the actual turbomachine. The estimate of the effective free-stream flow consists largely in estimating the local distribution of axial velocity. A need for this estimate was recognized by workers in the field and treated analytically by several, among whom were Traupel (reference 11), Rannie (in unpublished reports), Eckert and Korbacher (reference 12), and Sinnette (reference 13).

In these investigations the distribution of axial velocity is approximated by assuming axial symmetry (that is, an actuator disk theory where the flow is generated by an infinite number of blades of either negligible or finite chord) and neglecting the effects of radial acceleration of the fluid. Then the centrifugal force within the rotating fluid body is balanced by only the radial pressure gradient. The flow calculated in this manner is in reality that which exists far downstream of the blade row where radial velocities and accelerations have vanished. Unfortunately this analysis does not provide information on how rapidly the change in velocity pattern takes place as the fluid passes the blade row. It is clear that a portion of the change of axial velocity takes place before the blade row is encountered in a manner similar to the change in axial velocity which takes place ahead of the disk of a free propeller (reference 14). The velocities involved are those induced by either the bound or trailing vortex system. This vortex system was discussed by Ruden (reference 15), but he carried out no detailed calculations based on his vortex picture.

The first detailed analysis of the three-dimensional flow in turbomachines was given by Meyer (reference 16) in his consideration of the flow through a stationary blade row. Meyer gives the solution for the blade row which sheds no trailing vorticity although the flow may be rotational and of a complicated nature within the blade row. The modification caused by a finite number of blades is also treated. The method used by Meyer depends upon the fact that the problem may

be linearized within the blade row. A method for treating the problem where neither blade shape nor boundary contour is prescribed in advance has been discussed by Dr. H. Reissner (reference 17).

To allow at least an approximate treatment of the general blade row with prescribed wall geometry, a linearized analysis of the problem was proposed (reference 18) where the trailing vorticity is supposedly transported by the mean axial velocity, and the blade row is made up of an infinite number of blades of finite chord. In a sense, this investigation was complementary to that of Meyer. The analysis for the inverse problem, in which the blade forces are prescribed, was carried out in detail and was found to allow a reasonably simple general solution.

The results indicated that for blades of large aspect ratio the rate of formation of the velocity profile could be of importance in the three-dimensional flow process and in the blade design. Consequently, it seemed desirable to extend the analysis to further problems where physically important results could be obtained even under the severe limitations of infinite blade number, inviscid fluid, and so forth. Such problems include the direct problem, off-design operation, and interference in a multiple-blade-row machine. The work which has been done toward this end is described in the present paper.

The original analysis of the linearized theory was presented in a somewhat inconvenient manner for the purpose of allowing physical interpretation of some of the mathematical steps. For the sake of completeness in the present work, the analysis of the inverse problem is presented, but in a more concise form - one which also allows a direct extension to a linearized version of the direct problem. That such an extension should be possible is almost self-evident. For, if a solution exists for the case where the force components are prescribed, it is no great modification to give the solution when the components of the blade normal, proportional to the force components, are prescribed. The normal to the blade has a condition to be satisfied which is related to the fact that the elements of the blade must fit together so as to form a continuous surface. This restricts somewhat the independence of choosing the distribution of the blade normal and it has been pointed out by Bauersfeld (reference 19) that this same restriction also limits the choice of the force distribution.

The computation involved in finding the three-dimensional flow in any particular case is rather lengthy and not of a particularly simple nature because of the Bessel functions introduced by the cylindrical boundary. Using the Green's function formulation for the solution,

it becomes a rather simple matter to set up a numerical-integration method suitable for use on a punch-card machine. The numerical integrations were carried out by Mr. William Chaplin of the Southern California Cooperative Wind Tunnel and Mr. Thomas Vrebalovich of the Ten-Foot Wind Tunnel at the California Institute of Technology. Using this method, examples have been computed for blades of both high and low aspect ratio. Clearly the accuracy of such a linearized process is always open to question because there exists no general manner of making a positive estimate of the error involved in the approximations. Fortunately, however, Bragg and Hawthorne (reference 20) have recently discussed a problem which may be employed to give a check in one particular case. The problem solved by these authors is that of calculating the velocity induced by a distribution of vorticity which satisfies the equations of motion and is therefore an exact solution for some particular blade loading. It seems appropriate to find, a posteriori, the angular momentum distribution corresponding to this solution and then to solve the corresponding linear problem. The results would constitute a direct check on the accuracy of the linearized solution in one particular case. This analysis is not carried out here.

The flow calculated by the linearized approximation has, however, a curious characteristic which renders it inadequate for a particular but rather important problem. This difficulty appears when one solves the direct problem and notes that the interaction between the blade row and the fluid is not modified by changes in the axial velocity profile far upstream of the blade row. This is, of course, the direct result of the assumption that all variations in the axial velocity are small. However, problems arise in multistage turbomachines where the axial velocity variations may become appreciable and hence the linearized solution omits the factor of primary importance: The effect of continual variation of axial velocity upon the response of the flow to a given blade row. To cope with this difficulty, a solution is worked out which includes the first-order variation of the axial velocity and allows treatment of the above problem. In spite of the increased complexity of the calculation, it is still possible to employ the same general numerical method used in the simpler approximations.

Although the mathematical content of the linearized solution is simple, the amount of labor involved in achieving the solution to even a simple problem is somewhat forbidding. Furthermore, the results appear either as a rather complicated expression or in the form of tables and curves, neither of which allows much further analysis. Consequently, it was attempted to find a solution which, although still less exact, possessed a simple closed form in terms of elementary functions. The exponential approximation, introduced in reference 18, appeared to compare most favorably with the detailed results of the linearized solution. Its extreme simplicity makes it most useful and

in the present paper its application is extended to multistage axial turbomachines, to the direct problem, and to off-design operation. The results indicate it to be particularly well-suited to the study of mutual interference of neighboring blade rows.

It is recalled that the general philosophy on which the linearized solution was based was simply that the vorticity could be considered to be transported with the mean flow and not by the perturbation velocities; that is, disturbances in the radial and axial velocity are small in comparison with the mean axial velocity. There is clearly nothing singular about the application of this principle to axial flow and in particular it is possible to use it in the study of the so-called mixed-flow turbomachine. The solution has been obtained for a turbomachine whose walls consist of two coaxial cones and whose mean flow is that of a source or sink. The linearized solution is developed in analogy with that previously undertaken for the axial turbomachine. The mixed-flow problem introduces only the additional complication that the tangential vorticity component, which produces the variation in the through-flow velocity, varies as it is transported downstream because of its continual change of radius.

The approximations which are made in the following work render the methods inappropriate for the treatment of some very important turbomachine problems. It is clear that at some point the effects of viscosity must become of considerable influence in multistage machines. The importance of this phenomenon was recognized by Weske (reference 21) and has been observed by Rannie and his coworkers (reference 22). It appeared from Rannie's investigations on a three-stage axial compressor that the fine details of the axial velocity profile could be obscured by wall boundary layer and blade wakes. Hence it seems likely that more realistic considerations of some multistage turbomachine problems should account at once for viscosity effects. However, it is equally clear, therefore, that the large class of problems which may logically be treated under the assumptions of perfect fluid and infinite blade number need be carried only to an accuracy necessary to investigate the phenomenon and to explore its magnitude.

The work described in this report was carried out under the sponsorship and with the financial assistance of the National Advisory Committee for Aeronautics.

SYMBOLS

r,θ,z	cylindrical coordinates
u	velocity in direction r

v	velocity in direction θ
w	velocity in direction z
ξ	vorticity in direction r
η	vorticity in direction θ
ζ	vorticity in direction z
F_r	blade force impacted in direction r
F_θ	blade force impacted in direction θ
F_z	blade force impacted in direction z
n_r	component of blade surface normal in direction r
n_θ	component of blade surface normal in direction θ
n_z	component of blade surface normal in direction z
α	variable of integration corresponding to variable r
β	variable of integration corresponding to variable z
J_o	Bessel function of first kind and order zero
Y_o	Bessel function of second kind and order zero
J_1	Bessel function of first kind and order one
Y_1	Bessel function of second kind and order one
U_o	linear combination of Bessel function of order zero $\left(J_o(\epsilon_n r)Y_1(\epsilon_n r_1) - J_1(\epsilon_n r_1)Y_o(\epsilon_n r)\right)$
U_1	linear combination of Bessel function of order one $\left(J_1(\epsilon_n r)Y_1(\epsilon_n r_1) - J_1(\epsilon_n r_1)Y_1(\epsilon_n r)\right)$
ϵ_n	characteristic number for Bessel function U_1
ν_n	norm of Bessel function U_1

$\left.\begin{array}{l} G(r,z;\ \alpha,\beta) \\ K(r,z;\ \alpha,\beta) \end{array}\right\}$	kernels arising in integral expression for stream function in cylindrical coordinates
p	fluid static pressure
P	fluid total pressure $\left(p + \frac{1}{2}\rho\left(u^2 + v^2 + w^2\right)\right)$
ρ	fluid density
H	fluid total head (P/ρ)
ω	angular velocity of blade row
$\psi(r,z)$	stream function in cylindrical coordinate system
V_s	velocity in meridional plane, cylindrical coordinates
s	distance measured along stream surfaces in meridional plane
R,θ,Φ	spherical polar coordinates
U	velocity in radial direction R
v	longitudinal velocity (about polar axis) in direction θ
W	azimuthal velocity (away from polar axes) in direction ϕ
Ξ	vorticity component in direction of R
η	vorticity component in direction of θ
Z	vorticity component in direction of Φ
μ	$\cos \Phi$
F_μ	blade force in direction of Φ
$P_{n_i}^{(1)}(\mu)$	associated Legendre function of first kind, degree n_i

$Q_{n_i}^{(1)}(\mu)$	associated Legendre function of second kind, degree n_i
$H_{n_i}(\mu)$	linear combination of associated Legendre functions $\left(P_{n_i}^{(1)}(\mu)Q_{n_i}^{(1)}(\mu_1) - P_{n_i}^{(1)}(\mu_1)Q_{n_i}^{(1)}(\mu)\right)$
Ψ	dimensionless form of ψ
n_i	characteristic numbers for $H_{n_i}(\mu)$
νn_i	norm of Legendre function $H_{n_i}(\mu)$
$L(R,\mu;\ \alpha,\beta)$	kernel arising in integral expression for stream function in polar coordinates
$\psi(R,\Phi)$	stream function in polar coordinates
U_s	velocity in meridional plane, polar coordinates
R	ratio of blade length to projection of actual blade chord upon meridional plane
c	projection of actual blade chord upon meridional plane referred to as "blade chord"
d	distance from leading edge of one blade row to leading edge of following blade row
l	distance from center of blade loading to trailing edge
S	blade spacing ratio $\left(\frac{r_2 - r_1}{d}\right)$
N	number of blade rows in a multistage turbomachine
a, a_1, a_2, λ, r	constants
ϕ	angle between blade-row trailing edge and plane normal to turbomachine axis
$I(\beta,\delta)$	impulse function which has value unity in region $\beta - \delta/2$, $\beta + \delta/2$ and vanishes elsewhere

Subscripts:

k	blade row number in axial-flow turbomachine
s	along stream surface in meridional plane
ψ	normal to stream surfaces
o	zeroth approximation
1	turbomachine blade root
2	turbomachine blade tip
r	component in radial direction (cylindrical coordinates)
θ	component about axis of symmetry (cylindrical coordinates)
z	component along axis (cylindrical coordinates)
Φ	component in direction Φ
T	components of the trailing edge of blade row

Superscripts:

(1)	uniform flow in absence of blade rows
(2)	deviations from uniform based on simple radial equilibrium
(3)	deviation of flow caused by finite radial acceleration
*	conditions for which blade row in question was designed

Mathematical symbols:

$[\ ]$	jump across a discontinuity of value of quantity included in bracket
sgn( )	algebraic sign of quantity included in parentheses
$\mathcal{R}l$( )	real part of quantity included in parentheses

modulus or absolute value of quantity

mean value

DESCRIPTION OF FLOW THROUGH A TURBOMACHINE

The problem of three-dimensional flow through a turbomachine will be studied by idealizing the problem to one involving the flow of a perfect fluid between two infinite concentric surfaces of revolution. For simplicity these surfaces may be visualized as circular cylinders as indicated in figure 1, although the treatment is general. It is convenient to employ a system of cylindrical coordinates r, θ, and z, and to denote the velocity components in each of the coordinate directions as u, v, and w, respectively. In the following analysis it will be assumed that the flow is axially symmetric, and consequently all partial derivatives with respect to the angular variable θ will vanish. This is physically equivalent to assuming that the flow prescribed far upstream of any blade row is axially symmetric and that the blade rows are made up of an infinite number of similar infinitely thin blades. As a consequence of axial symmetry, the vorticity components may be written in the form

$$\left.\begin{aligned} \xi &= -\frac{\partial v}{\partial z} \\ \eta &= \frac{\partial u}{\partial z} - \frac{\partial w}{\partial r} \\ \zeta &= \frac{\partial}{r\,\partial r}(vr) \end{aligned}\right\} \tag{1}$$

Now it is well-known (reference 24) that a knowledge of the vorticity distribution and appropriate boundary conditions is equivalent to a knowledge of the velocity distribution. As in the case of the finite wing, it is advantageous to work with the vorticity components because of the simple conservation properties they possess and to calculate the complete velocity field from the velocity fields associated with the individual vorticity components. From the assumption of axial symmetry, it is clear (fig. 2) that only tangential velocity is induced by the radial and axial vorticity components while both radial and axial velocities are associated with the tangential component of vorticity. This relationship is clarified by the introduction of a stream function. Because of axial symmetry, the continuity equation is simply

$$\frac{\partial u}{\partial r} + \frac{u}{r} + \frac{\partial w}{\partial z} = 0 \tag{2}$$

and is identically satisfied by choosing the stream function $\psi(r,z)$ with the properties $u = \frac{1}{r}\frac{\partial\psi}{\partial z}$ and $w = -\frac{1}{r}\frac{\partial\psi}{\partial r}$. As a consequence, the flow may be described kinematically by the stream function ψ and the tangential velocity component v. The tangential vorticity is therefore expressed in terms of the stream function

$$\eta = \frac{1}{r}\left(\frac{\partial^2\psi}{\partial r^2} - \frac{1}{r}\frac{\partial\psi}{\partial r} + \frac{\partial^2\psi}{\partial z^2}\right) \tag{3}$$

When the distribution of tangential vorticity is known together with the appropriate boundary conditions, the stream function may be found through solution of the partial differential equation (3).

As yet only the kinematics of the flow have been considered, and it is obvious that the distribution of the tangential vorticity may not be prescribed arbitrarily but rather only under the dynamical restrictions imposed by the equations of motion. If the total head, the equivalent of total enthalpy for an incompressible fluid, is denoted in the conventional fashion $H \equiv \frac{P}{\rho} \equiv \frac{p}{\rho} + \frac{u^2 + v^2 + w^2}{2}$ where p is the local fluid pressure, the Eulerian equation may be written, taking account of the axial symmetry, in the form

$$\frac{\partial v}{\partial \zeta} - \frac{\partial w}{\partial \eta} = -F_r + \frac{\partial H}{\partial r} \tag{4}$$

$$\frac{\partial w}{\partial \xi} - \frac{\partial u}{\partial \zeta} = -F_\theta \tag{5}$$

$$\frac{\partial u}{\partial \eta} - \frac{\partial v}{\partial \xi} = -F_z + \frac{\partial H}{\partial z} \tag{6}$$

The force components exerted by the blade row are denoted F_r, F_θ, and F_z.

In the following analysis it will be convenient to express derivatives along and normal to the stream surfaces ψ = Constant in terms of the usual derivatives in the axial and radial directions. If s denotes the distance along a given stream surface (fig. 3) measured from an arbitrary point and V_s the meridional velocity along a given

stream surface, then these directional derivatives are most conveniently expressed

$$\frac{\partial}{\partial s} = \frac{u}{V_s}\frac{\partial}{\partial r} + \frac{w}{V_s}\frac{\partial}{\partial z} \tag{7}$$

and

$$rV_s\frac{\partial}{\partial \psi} = -\frac{w}{V_s}\frac{\partial}{\partial r} + \frac{u}{V_s}\frac{\partial}{\partial z} \tag{8}$$

Multiplying the first equation of motion (equation (4)) by u and the third equation of motion (equation (6)) by w, adding the results, and taking account of the transformation equation (7), it follows that

$$\frac{\partial H}{\partial s} = \frac{1}{V_s}\left[\left(uF_r + wF_z\right) + v(u\zeta - w\xi)\right]$$

Further simplifying the right side of this relation by use of the second equation of motion (equation (5)), the change of total head along the stream surfaces becomes

$$\frac{\partial H}{\partial s} = \frac{1}{V_s}\left(uF_r + vF_\theta + wF_z\right) \tag{9}$$

Therefore the total head remains constant along stream surfaces when the force system vanishes as it does, for example, outside of blade rows. The force system F_r, F_θ, or F_z, however, is not completely arbitrary but is restricted to be one that can be imparted by a set of solid surfaces in an ideal fluid. Because of the vanishing shearing stress, the force exerted on the fluid by a surface must be normal to the surface; that is, it must be caused by a pressure difference. However, the fluid velocity relative to the blade is parallel to the blade at the surface (fig. 4) and consequently is normal to the force exerted by the blade. The kinematic condition on the force vector F_r, F_θ, or F_z is then that it be normal to the relative velocity past the blade. For the turbomachine problem, the only possible motion of the blade row is a rotation about the axis of symmetry so that the velocity

components relative to a blade row rotating with an angular velocity ω are u, $v - \omega r$, and w. The condition that the force be normal to the relative velocity is simply

$$uF_r + (v - \omega r)F_\theta + wF_z = 0 \tag{10}$$

and consequently the three force components are not independent. Then it is clear from equations (9) and (10) that

$$\frac{\partial H}{\partial s} = \frac{\omega}{V_s} rF_\theta \tag{11}$$

Now, more precisely, it appears that the total head is invariant along stream surfaces when either the tangential force component or the angular velocity of the blade row vanishes.

The total head is not the only quantity with such invariant properties, for the second equation of motion may be written

$$\left(u \frac{\partial}{\partial r} + w \frac{\partial}{\partial z}\right)(vr) \equiv V_s \frac{\partial(vr)}{\partial s}$$

$$= rF_\theta \tag{12}$$

The term vr is equivalent to the local moment of momentum by virtue of the axial symmetry. It follows from equation (12) that the moment of momentum about the symmetry axis is also invariant along stream surfaces outside of any blade row and within the blade row changes at a rate proportional to the moment of the tangential blade force.

By comparison of equations (11) and (12), it is seen that $\frac{\partial H}{\partial s} = \frac{\partial}{\partial s}(\omega rv)$, and therefore the total head can differ from the term ωrv by, at most, a quantity depending upon the stream function alone. Hence it is possible to write $H = \omega rv + F(\psi)$ although it is more convenient to write this in the form

$$H - H_k(\psi) = \omega\left[rv - (rv)_k\right] \tag{13}$$

where $H_k(\psi)$ and $(rv)_k$ are the values of the total head and angular momentum in the region between the kth and (k - 1)th blade rows (fig. 5) and equation (13) is then valid between the (k - 1)th and (k + 1)th blade rows.

The problem still at hand, however, is to express the tangential vorticity η in terms of dynamical variables by means of the equations of motion (4) to (6). Some progress in this direction may be made by computing the variation of total head normal to the stream surfaces according to equation (8). Then, utilizing the equations of motion,

$$\frac{\partial H}{\partial \psi} = \frac{1}{rV_s^2}\left(-w\frac{\partial H}{\partial r} + u\frac{\partial H}{\partial z}\right)$$

$$= \frac{\eta}{r} + \frac{1}{r^2}(vr)\frac{\partial(vr)}{\partial \psi} + \frac{1}{rV_s}\left(\frac{-wF_r + uF_z}{V_s}\right) \tag{14}$$

However

$$\frac{uF_z - wF_r}{V_s} = F_\psi$$

where F_ψ is the force component normal to the stream surfaces and $V_s \equiv \sqrt{u^2 + w^2}$ is the total velocity component along the stream surface in the meridional plane. The tangential vorticity may then be expressed in the form

$$\frac{\eta}{r} = \frac{\partial H}{\partial \psi} - \frac{1}{r^2}(vr)\frac{\partial}{\partial \psi}(vr) - \frac{F_\psi}{rV_s} \tag{15}$$

of which Bragg and Hawthorne (reference 20) have given the special case which is valid outside the blade row. Equation (15) is equivalent to the expression obtained for the tangential vorticity in reference 18, for if the total head be written in terms of the angular momentum

$$\frac{\eta}{r} = -\frac{1}{r^2}\left(vr - \omega r^2\right)\frac{\partial}{\partial \psi}(vr) - \frac{F_\psi}{rV_m} + g_1(\psi) \tag{16}$$

which upon linearization reduces to the form previously given.

In addition to equation (10), there exists another condition among the blade forces which arises from the fact that these forces must be produced by a series of continuous blade surfaces. The forces must be normal to the blade surface as well as to the stream surfaces and an additional limitation is thereby imposed on the prescribed force system. If $\beta(r,\theta,z)$ is a function which is constant along the blade surface and such that $|\text{grad } \beta| = 1$, the unit normal to the surface is given by grad β. Therefore if $\lambda(r,z)$ is the blade loading or magnitude of the blade force, the blade force vector may be written

$$\overline{F} = \lambda(r,z)\text{grad } \beta$$

from which it follows that

$$\overline{F} \cdot \text{curl } \overline{F} = 0 \tag{17}$$

Expressed in terms of derivatives along and normal to the stream surfaces, this condition is

$$\frac{\partial}{\partial s}\left(\frac{F_\psi}{r^2 V_s F_\theta}\right) = \frac{\partial}{\partial \psi}\left(\frac{F_s}{rF_\theta}\right)$$

where, utilizing equation (10) to express the right side of this relation,

$$\frac{\partial}{\partial s}\left(\frac{F_\psi}{r^2 V_s F_\theta}\right) = -\frac{\partial}{\partial \psi}\left(\frac{vr - \omega r^2}{r^2 V_s}\right) \tag{18}$$

It now appears that the force component F_ψ is not independent of the angular momentum vr. In fact, upon integration along a streamline and substituting for F_θ from equation (12),

$$F_\psi = -rV_s^2\left[\Lambda(\psi) + \int_{s_o}^{s} \frac{\partial}{\partial \psi}\left(\frac{vr - \omega r^2}{r^2 V_s}\right)ds\right]\frac{\partial(rv)}{\partial s} \tag{19}$$

The integration with respect to s begins at the leading edge of the blade for each stream surface and this is indicated by the lower limit s_o. (Since the origin of s is undefined, it is conveniently taken at the blade leading edge in order that $s_o \equiv 0$.) The significance of the function $\Lambda(\psi)$ is now clarified. At the leading edge, the initial value of the loading is given by

$$-rV_s^2\Lambda(\psi)\frac{\partial(vr)}{\partial s}$$

If, in particular, the blade leading edge is a radial line, then $F_\psi = 0$ and $\Lambda(\psi)$ vanishes. The function $\Lambda(\psi)$ is indicative of the leading-edge shape.

In its general form, the differential-integral equation for the stream function may be written

$$\frac{\partial^2\psi}{\partial r^2} - \frac{1}{r}\frac{\partial\psi}{\partial r} + \frac{\partial^2\psi}{\partial z^2} = -(vr - \omega r^2)\frac{\partial}{\partial\psi}(vr) + r^2V_s\left[\Lambda(\psi) + \int_0^s \frac{\partial}{\partial\psi}\left(\frac{vr - \omega r^2}{r^2V_s}\right)ds\right]\frac{\partial}{\partial s}(vr) + r^2g_1(\psi) \quad (20)$$

where

$$g_1(\psi) = \frac{\partial}{\partial\psi}\left[H_k - \omega(rv)_k\right]$$

Because of the manner in which the stream function enters on the right side of equation (20), the problem is usually nonlinear. Singular cases where it becomes linear with no approximation have been discussed in reference 20. The boundary conditions for the equation are given values of the stream function ψ on the inner and outer surfaces and complete information on the stream function far ahead of the blade row. In general, very little information may be prescribed far downstream of the blade row except for special geometry of the inner and outer bounding surfaces. When the boundaries are cylindrical, for example, the radial velocity vanishes $\left(\frac{1}{r}\frac{\partial\psi}{\partial z} = 0\right)$ both far upstream and far downstream of the blade row. To specify the problem completely it is necessary also to prescribe sufficient information to determine the left side of equation (20) as a function of r, z, and ψ. From the knowledge of flow conditions upstream, $g(\psi)$ is fixed and the remaining information may be prescribed in several ways. The two general physical problems lead to:

(1) Prescribing some combination of blade forces, total head, and angular momentum distribution. These problems will be denoted the inverse problem; within the framework of linearized theory they are identical.

(2) Prescribing the shape of the blade. This is known as the direct problem.

Because of the nonlinearity of the differential equation (20), it is difficult to discuss whether or not a given boundary-value problem leads to a solution. Therefore the mathematical formulation of these problems will be deferred until the discussion of the linearized theory has been completed.

LINEARIZED PROBLEM FOR AXIAL TURBOMACHINE

The nonlinearity which occurs on the right side of the fundamental differential equation (20) is an expression of the physical fact that the angular momentum, the total head, and consequently the tangential vorticity component possess simple conservation properties (equations (11) and (12)) along stream surfaces - surfaces which are not known until the problem is solved. The method of linearization which naturally suggests itself is that of substituting for the stream function on the right side of equation (20) an approximate value given in terms of the independent variables r and z. Then equation (20) becomes a well-known inhomogeneous linear differential equation. The substitution of an approximate stream function implies the physical approximation that the simple conservation relations hold, not along the ultimate stream surfaces but rather along a set of predetermined surfaces which from "physical intuition" promise to be reasonably close to the true stream surfaces. Thus, as in most approximate processes, physical judgment plays an important role in determining the final accuracy. For, if the approximation chosen for the stream function happened to be the correct one, the resulting solution would be exact, and, as the approximate stream function differs more from the true one, it is expected that the result will differ more from the exact solution.

For the solutions of the axial turbomachine, it is reasonably accurate, particularly when the ratio of the inner to outer diameters is close to unity, to approximate the stream function as that of the undisturbed mean flow,

$$\psi \approx \psi_o$$

$$= -\frac{w_o r^2}{2} \tag{21}$$

where w_o is the average through-flow velocity. Then since $d\psi = -w_o r\, dr$ and the direction of the normal to the stream surfaces is radial, the right side of equation (20) simplifies to give

$$\frac{\partial^2\psi}{\partial r^2} - \frac{1}{r}\frac{\partial\psi}{\partial r} + \frac{\partial^2\psi}{\partial z^2} = \frac{vr - \omega r^2}{w_o}\frac{\partial(vr)}{r\,\partial r} - \frac{rF_r}{w_o} + r^2 g_1(r) \tag{22}$$

where

$$-F_r = \left[rw_o^2\Lambda'(r) - \int_{z_o}^{z} \frac{\partial}{\partial r}\left(\frac{vr - \omega r^2}{r^2}\right)dz\right]\frac{\partial(vr)}{\partial z} \tag{23}$$

and

$$\Lambda'(r) \equiv A(\psi_o)$$

In accordance with this approximation, the total head, moment of momentum, and tangential vorticity remain constant along circular cylinders outside the blade rows and vary in a known manner within the blade rows. In the language of wing theory the vorticity trailing from the blade row is transported by the mean velocity w_o and not by its own induced velocity.

The linearized equation (22) is simply a linear second-order equation of the elliptic type with an inhomogeneous term which depends upon the conditions prescribed on the blades and far upstream of the blades. The inner and outer boundaries are concentric cylinders of radii r_1 and r_2, respectively, on which the stream function is constant. Further, because of the wall geometry, it is clear that the radial velocity vanishes at $z = \pm\infty$. Then the boundary conditions on the walls may be given as

$$\left.\begin{aligned} \psi(r_1,z) &= 0 \\ \psi(r_2,z) &= -w_o\left(\frac{r_2^2 - r_1^2}{2}\right) \end{aligned}\right\} \tag{24}$$

where w_o is the mean axial velocity, while far upstream and downstream of any blades

$$\begin{aligned} \frac{1}{r}\left(\frac{\partial\psi}{\partial z}\right)_{-\infty} &= \frac{1}{r}\left(\frac{\partial\psi}{\partial z}\right)_{\infty} \\ &= 0 \end{aligned} \tag{25}$$

The prescribed velocity components far upstream $w(r,-\infty)$ and $v(r,-\infty)$ and a knowledge of angular momentum change across each of the blade rows preceding the one under consideration determine the function $g_1(r)$

$$r^2g_1(r) = -\frac{r}{w_o}\frac{\partial}{\partial r}\left[H_k(\psi_o) + \omega rv(\psi_o)\right] \tag{26}$$

The manner in which the remaining terms of the right-hand side are determined depends upon whether the blade forces, the distributions of angular momentum or total head, or the blade shapes are the given data of the problem. It is assumed that the angular velocity ω is always given. Possible methods of prescribing sufficient data are:

(1) Angular momentum and leading-edge load given as functions of r and z. With these data the right side of equation (22) is known and the mathematical problem is complete.

(2) Total-head distribution and leading-edge load given as functions of r and z. If $G(\psi) \equiv H_k(\psi) - \omega(rv)_k$, the relation between the total head and angular momentum, equation (13), may be introduced into equation (15) to give

$$\frac{\eta}{r} = \frac{\partial H}{\partial \psi} - \frac{1}{r^2}\left[\frac{H}{\omega} - \frac{G(\psi)}{\omega}\right]\frac{\partial}{\partial \psi}\left[\frac{H}{\omega} - \frac{G(\psi)}{\omega}\right] - \frac{F_\psi}{rV_s} \tag{27}$$

With the linearizing approximation, this gives

$$\eta r = \frac{\partial^2 \psi}{\partial r^2} - \frac{1}{r}\frac{\partial \psi}{\partial r} + \frac{\partial^2 \psi}{\partial z^2} = \frac{r}{w_o}\frac{\partial H}{\partial r} - \frac{1}{w_o r \omega^2}\left[H - G(\psi_o)\right]\frac{\partial}{\partial r}\left[H - G(\psi_o)\right] - \frac{F_r}{r w_o} \tag{28}$$

Likewise the value of F_r is fixed according to equation (23) by prescription of the leading-edge force, the angular momentum being known in terms of the prescribed distribution of total head. Therefore the right side is again known and the mathematical problem is complete.

(3) The distribution of blade loading given as a function of r and z. There is a relation between the forces and the velocity components (equation (10)) which expresses the fact that the force exerted by the blade is normal to the relative fluid velocity past the blade. In terms of the stream function this relation is

$$\frac{1}{r}\frac{\partial \psi}{\partial z} F_r + (v - \omega r)F_\theta - \frac{1}{r}\frac{\partial \psi}{\partial r} F_z = 0$$

which, to the present approximation of terms on the right side of equation (22), gives

$$F_z = -\frac{vr - \omega r^2}{w_o r} F_\theta \tag{29}$$

This indicates, as has already been observed (reference 18), that within the linearized theory the axial and tangential forces cannot be prescribed independently. Furthermore, from the equation of equilibrium in the tangential direction, equation (12), it follows that

$$\left(\frac{1}{r}\frac{\partial\psi}{\partial z}\frac{\partial}{\partial r} - \frac{1}{r}\frac{\partial\psi}{\partial r}\frac{\partial}{\partial z}\right)(vr) = rF_\theta$$

so that within the linearized approximations $\psi \approx \psi_o$ and

$$w_o \frac{\partial}{\partial z}(vr) = rF_\theta \tag{30}$$

Upon integration, the angular momentum may be expressed as a function of the tangential force component

$$vr = (vr)_k + \int_{z_k}^{z} \frac{rF_\theta}{w_o}\,dz$$

the point z_k being that at which the quantity $G(\psi_o)$ is determined. Now that the angular momentum is known, the problem of prescribed blade forces is reduced to that of prescribed angular momentum and leading-edge force.

Cases (1), (2), and (3), the three most usual formulations of the inverse problem of turbomachines, are therefore equivalent under the linearized theory.

(4) The direct problem: The blade normal n_r, n_θ, or n_z prescribed as a function of r and z. The three components of the normal to a blade represented by a continuous surface must satisfy the relation

$$\frac{\partial}{\partial z}\left(\frac{n_r}{rn_\theta}\right) - \frac{\partial}{\partial r}\left(\frac{n_z}{rn_\theta}\right) = 0$$

Furthermore, since the blade normal is also parallel with the force vector F_r, F_θ, or F_z, it follows that

$$\frac{F_r}{F_z} = \frac{n_r}{n_z}$$

and

$$\frac{F_\theta}{F_z} = \frac{n_\theta}{n_z}$$

Then, according to equation (29), n_θ/n_z may be written

$$\frac{n_\theta}{n_z} = \frac{w_o r}{vr - \omega r^2} \tag{31}$$

which establishes the angular momentum vr in terms of the independent variables r and z. The value of the tangential force F_θ follows directly from equation (30) so that $F_r = F_\theta\left(\frac{n_r}{n_\theta}\right)$ is known. Hence for a given distribution of blade normal the distribution of angular momentum and the radial force may be found and the problem is in this way reduced to that of case (1).

For the linearized direct problem, the right side of equation (22) becomes explicitly

$$rf(r,z) = w_o\left[2\,\frac{n_z}{n_\theta}\,\frac{\omega r}{w_o} + \left(\frac{n_z}{n_\theta}\,\frac{\partial}{\partial r} - \frac{n_r}{n_\theta}\,\frac{\partial}{\partial z}\right)\frac{rn_z}{n_\theta}\right] + r^2 g_1(r) \tag{32}$$

Consequently, both the inverse and direct linearized problems for axial turbomachines may be expressed mathematically as

$$\left.\begin{aligned}
&\frac{\partial^2\psi}{\partial r^2} - \frac{1}{r}\frac{\partial\psi}{\partial r} + \frac{\partial^2\psi}{\partial z^2} = rf(r,z) \\
&\psi = 0 \qquad\qquad \text{on} \quad r = r_1 \\
&\psi = -w_o\left(\frac{r_2{}^2 - r_1{}^2}{2}\right) \qquad \text{on} \quad r = r_2 \\
&\frac{1}{r}\left(\frac{\partial\psi}{\partial z}\right)_{-\infty} = \frac{1}{r}\left(\frac{\partial\psi}{\partial z}\right)_{\infty} \\
&\qquad = 0
\end{aligned}\right\} \tag{33}$$

where $f(r,z)$ is a known function in any particular problem.

SOLUTION OF LINEARIZED PROBLEM

Each of the formulations of the linearized direct and inverse problems for the axial turbomachine considered in the last section may be transformed to the mathematical problem given by equations (33). In the solution of this problem, it will be convenient to express the result as the sum of three stream functions

$$\psi = \psi^{(1)} + \psi^{(2)} + \psi^{(3)} \tag{34}$$

Here $\psi^{(1)}$ is the stream function associated with the through-flow velocity prescribed far upstream of the blade rows and is independent of the influence of the blades. The function $\psi^{(2)}(r,z)$ represents the disturbance caused by the blade rows calculated according to the simple radial equilibrium theory as discussed in references 11 to 13. The third stream function $\psi^{(3)}(r,z)$ represents the deviation from the simple equilibrium theory caused by the finite radial acceleration. The present analysis will be simplified by considering only a single stationary or rotating blade row of chord c with its midpoint located in the plane $z = 0$.

Far upstream of the blade row the tangential vorticity $\eta_o(r)$ is prescribed so that according to equation (3) the stream function $\psi^{(1)}(r)$ is defined by the relation

$$\frac{\partial}{\partial r}\left(\frac{1}{r}\frac{\partial\psi^{(1)}}{\partial r}\right)_{z=-\infty} = \eta_o(r)$$

$$= -\frac{\partial w(r,-\infty)}{\partial r} \tag{35}$$

Integration of this equation together with the boundary conditions

$$\left.\begin{aligned} \frac{\partial\psi^{(1)}}{\partial z} &= 0 \qquad \text{at} \quad r = r_2 \\ \psi^{(1)} &= 0 \qquad \text{at} \quad r = r_1 \end{aligned}\right\} \tag{36}$$

gives directly

$$\psi^{(1)}(r) = -\int_{r_1}^{r} \alpha w(\alpha,-\infty)\, d\alpha \tag{37}$$

Now if the function $\psi'(r,z)$ is defined by the relation

$$\psi = \psi^{(1)} + \psi' \tag{38}$$

The problem for determining ψ' may be written

$$\frac{\partial^2}{\partial r^2}\left(\frac{\psi'}{r}\right) + \frac{\partial}{\partial r}\left(\frac{\psi'/r}{r}\right) + \frac{\partial^2}{\partial z^2}\left(\frac{\psi'}{r}\right) = f(r,z) \tag{39}$$

$$\psi'(r_1,z) = \psi'(r_2,z)$$

$$= 0 \quad .$$

$$\psi'(r,-\infty) = \frac{1}{r}\left(\frac{\partial\psi'}{\partial z}\right)_{z=\infty}$$

$$= 0 \tag{40}$$

The homogeneous differential equation corresponding to equation (39) has solutions of the form $U_1(\epsilon_n r)e^{\pm\epsilon_n z}$ where $U_1(\epsilon_n r)$ is a linear combination of Bessel functions of the first order:

$$U_1(\epsilon_n r) = J_1(\epsilon_n r)Y_1(\epsilon_n r_1) - J_1(\epsilon_n r_1)Y_1(\epsilon_n r) \tag{41}$$

The boundary condition $\psi'(r_1,z) = 0$ is therefore satisfied identically and the characteristic numbers ϵ_n are determined so as to fulfill the condition $\psi'(r_2,z) = 0$ and consequently satisfy the transcendental equation

$$U_1(\epsilon_n r_2) = J_1(\epsilon_n r_2)Y_1(\epsilon_n r_2) - J_1(\epsilon_n r_1)Y_1(\epsilon_n r_2) = 0 \tag{42}$$

If $I(\beta,\delta)$ is an impulse function which has the value unity in the interval $\beta - \frac{\delta}{2} < z < \beta + \frac{\delta}{2}$ (where δ is very small) and vanishes elsewhere, the contribution of the inhomogeneous term $f(r,z)$ in an interval $\beta - \frac{\delta}{2} < z < \beta + \frac{\delta}{2}$ may be constructed from the simple solutions of the homogeneous differential equations

$$\left.\begin{aligned}
&\int_{r_1}^{r_2} I(\beta,\delta)f(\alpha,z)\sum_{1}^{\infty}\frac{\alpha U_1(\epsilon_n\alpha)rU_1(\epsilon_n r)}{2\epsilon_n\nu_n^2}\,e^{\epsilon_n(z-\beta)}\,d(\alpha\delta) \\
&\qquad\qquad\qquad\qquad\qquad\qquad\qquad\qquad z < \beta - \frac{\delta}{2} \\
&\int_{r_1}^{r_2} I(\beta,\delta)f(\alpha,z)\sum_{1}^{\infty}\frac{\alpha U_1(\epsilon_n\alpha)rU_1(\epsilon_n r)}{2\epsilon_n\nu_n^2}\,e^{-\epsilon_n(z-\beta)}\,d(\alpha\delta) \\
&\qquad\qquad\qquad\qquad\qquad\qquad\qquad\qquad z > \beta + \frac{\delta}{2}
\end{aligned}\right\} \tag{43}$$

The numbers ν_n are the norms of the Bessel functions $U_1(\epsilon_n r)$.

$$\begin{aligned}
\nu_n^2 &= \int_{r_1}^{r_2} \alpha U_1^2(\epsilon_n\alpha)\,d\alpha \\
&= \frac{r_2^2U_o^2(\epsilon_n r_2) - r_1^2U_o^2(\epsilon_n r_1)}{2}
\end{aligned} \tag{44}$$

where $U_o = J_o(\epsilon_n r)Y_1(\epsilon_n r_1) - J_1(\epsilon_n r_1)Y_o(\epsilon_n r)$. The complete solution of the problem is simply the sum of solutions of the type in equations (43), taken over all values of β, that is,

$$\psi'(r,z) = \int_{r_1}^{r_2}\int_{-\infty}^{\infty} f(\alpha,\beta)G(r,z;\ \alpha,\beta)\,d\alpha\,d\beta \tag{45}$$

where

$$G(r,z;\ \alpha,\beta) = \sum_{1}^{\infty}\frac{\alpha U_1(\epsilon_n\alpha)rU_1(\epsilon_n r)}{2\epsilon_n\nu_n^2}\,e^{-\epsilon_n|z-\beta|} \tag{46}$$

is the Green's function of the problem. To investigate the nature of this solution let $f(r,z)$ vanish from $z = -\infty$ to $z = \beta$ and let $\left[f(r,z)\right]_\beta$ denote the jump of the function $f(r,z)$ at its point of discontinuity $z = \beta$. Physically this corresponds to the infinitely thin blade row or actuator disk. The solution of this problem is formally given by equations (38) and (45). However, because of the particularly simple form of the function $f(r,z)$ it is convenient to simplify equation (45) by partial integration. Inasmuch as $f(r,z)$ is discontinuous, the result consists of two parts, one arising from the jump $\left[f(r,z)\right]_\beta$, the other from the continuous part $z > \beta$. Therefore if the function $K(r,z;\ \alpha,\beta)$ is employed to denote:

$$K(r,z;\ \alpha,\beta) = \operatorname{sgn}(\beta - z) \sum_{n=1}^{\infty} \frac{\alpha U_1(\epsilon_n\alpha)\, r U_1(\epsilon_n r)}{2\epsilon_n^{\,2}\nu_n^{\,2}}\, e^{-\epsilon_n|z-\beta|} \tag{47}$$

the partial integration gives

$$\psi'(r,z) = \int_{r_1}^{r_2} \left[f(\alpha,\beta)\right]_\beta K(r,z;\ \alpha,\beta)\, d\alpha \qquad z < \beta$$

$$= \int_{r_1}^{r_2} \left[f(\alpha,\beta)\right]_\beta K(r,z;\ \alpha,\beta)\, d\alpha + g(r,\beta) \qquad z > \beta$$

The function $g(r,\beta)$ is found to be, by carrying out the process indicated,

$$g(r,\beta) = 2\int_{r_1}^{r_2} \left[f(\alpha,\beta)\right]_\beta \sum_{n=1}^{\infty} \frac{\alpha U_1(\epsilon_n\alpha)\, r U_1(\epsilon_n r)}{2\epsilon_n^{\,2}\nu_n^{\,2}}\, d\alpha$$

Inasmuch as the function $K(r,z;\ \alpha,\beta)$ vanishes for large values of z, it is obvious that $g(r,\beta)$ is the value of $\psi'(r,z)$ induced at $z = \infty$ by the jump in $f(r,z)$ at the point $z = \beta$. The complete solution equivalent to equation (45) is simply the sum of solutions corresponding to such jumps and in the limit becomes, as the jumps become small and $f(\alpha,\beta)$ becomes continuous and differentiable,

$$\psi'(r,z) = \int_{r_1}^{r_2} \int_{-\infty}^{\infty} \frac{\partial f(\alpha,\beta)}{\partial \beta} K(r,z;\ \alpha,\beta)\ d\alpha\ d\beta + \int_{-\infty}^{z} g(r,\beta)\ d\beta \tag{48}$$

This result may be obtained directly by partial integration of equation (45).

The function $g(r,\beta)$ is the increment of the stream function induced at $z = \infty$ by the change in angular momentum at $z = \beta$. It is calculated most easily by noting that far downstream of the blade row the stream function approaches a value which is independent of the distance z from the center line of the blade row, and hence the term $\frac{\partial^2\psi'}{\partial z^2}$ vanishes. Furthermore, both because the angular momentum is conserved along circular cylinders and the radial force F_r vanishes outside of the blade row, it is clear from equation (39) that the increment of stream function satisfies the ordinary differential equation

$$r \frac{d}{dr}\left\{\frac{1}{r} \frac{d\left[g(r,\beta)\right]}{dr}\right\} = - \frac{d}{d\beta}\left[\frac{vr - \omega r^2}{w_o} \frac{d}{dr}(vr)\right] \tag{49}$$

where $vr(r,\beta)$ represents the angular momentum at the axial location $z = \beta$. Then the sum of such increments to any axial location z is

$$\int_{-\infty}^{z} g(r,\beta)\ d\beta$$

and is defined to be $\psi^{(2)}(r,z)$ where z enters merely as a parameter. This solution is a generalization of the simple equilibrium theory where the pressure gradient balances the centrifugal force in all planes of the blade row. Clearly upon integration of equation (49) the function $\psi^{(2)}(r,z)$ is a solution of the ordinary differential equation

$$r \frac{d}{dr}\left[\frac{1}{r} \frac{d\psi^{(2)}(r,z)}{dr}\right] = \frac{vr - \omega r^2}{w_o} \frac{d}{dr}(vr)\Bigg|_{-\infty}^{z} \tag{50}$$

together with the boundary conditions

$$\left.\begin{aligned} \psi^{(2)}(r_1,z) &= \psi^{(2)}(r_2,z) \\ &= 0 \\ \psi^{(2)}(r,-\infty) &= 0 \end{aligned}\right\} \tag{51}$$

The remaining portion of equation (48) describes the variation of the linearized solution from the simple equilibrium solution and is given by

$$\psi^{(3)}(r,z) = \int_{r_1}^{r_2}\int_{-\infty}^{\infty} \frac{\partial f(\alpha,\beta)}{\partial\beta} K(r,z;\ \alpha,\beta)\ d\alpha\ d\beta\ +$$

$$\int_{r_1}^{r_2} \left[f(\alpha,\beta)\right] K(r,z;\ \alpha,\beta)\ d\alpha \tag{52}$$

where the last integral accounts for the contribution of any discontinuities in $f(r,z)$. Such discontinuities occur, for example, in the direct problem where, because of the shape of the blades at the leading edge, the angular momentum changes abruptly. The mathematical problem satisfied by $\psi^{(3)}(r,z)$ is

$$\left.\begin{aligned}
&\frac{\partial^2\psi^{(3)}}{\partial z^2} - \frac{1}{r}\frac{\partial\psi^{(3)}}{\partial r} + \frac{\partial^2\psi^{(3)}}{\partial z^2} = rf(r,z) \\
&\psi^{(3)}(r_1,z) = \psi^{(3)}(r_2,z) \\
&\qquad\qquad = \psi^{(3)}(r,-\infty) \\
&\qquad\qquad = \psi^{(3)}(r,\infty) \\
&\qquad\qquad = 0
\end{aligned}\right\} \tag{53}$$

The first integral in equation (52) is usually not convenient to evaluate because the influence function is expressed as an infinite series which does not appear to be easily summable. However, a certain simplification, at least in numerical work, is afforded if it is noted that for the usual ratios of hub-to-tip diameter, the values of the characteristic numbers ϵ_n, where $\epsilon_n r_1 \approx \frac{n}{\frac{r_2}{r_1} - 1}$, are sufficiently large so that the asymptotic values of the Bessel functions, valid for large argument, may be used. The values are (reference 24)

$$\left.\begin{aligned}
J_1(\epsilon_n r) &\approx \frac{\sin \epsilon_n r - \cos \epsilon_n r}{\sqrt{\pi\epsilon_n r}} \\
Y_1(\epsilon_n r) &\approx -\frac{\sin \epsilon_n r + \cos \epsilon_n r}{\sqrt{\pi\epsilon_n r}}
\end{aligned}\right\} \tag{54}$$

and consequently the characteristic functions are

$$U_1(\epsilon_n r) \approx \frac{1}{\pi\epsilon_n\sqrt{rr_1}} \sin \epsilon_n(r - r_1) \tag{55}$$

From this result it is clear that the characteristic numbers, solutions of $U_1(\epsilon_n r_2) = 0$, are simply

$$\epsilon_n \approx \frac{n\pi}{r_2 - r_1} \tag{56}$$

and consequently the norm is

$$\nu_n^2 \approx \frac{(r_2 - r_1)^2}{\pi^2 n^2} \int_{r_1}^{r_2} \sin^2\left(n\pi \frac{\alpha - r_1}{r_2 - r_1}\right) d\alpha$$

$$= \frac{(r_2 - r_1)^3}{2\pi^2 n^2 r_1} \tag{57}$$

and the Green's function is the trigonometric series

$$G(r,z;\ \alpha,\beta) \approx \sqrt{\alpha r} \sum_1^\infty \frac{\sin n\pi\left(\frac{r - r_1}{r_2 - r_1}\right) \sin n\pi\left(\frac{\alpha - r_1}{r_2 - r_1}\right)}{n\pi} e^{-n\pi\left|\frac{z-\beta}{r_2-r_1}\right|} \tag{58}$$

Using the complex notation

$$\lambda = -\left|\frac{z - \beta}{r_2 - r_1}\right| + i\left(\frac{r - r_1}{r_2 - r_1} + \frac{\alpha - r_1}{r_2 - r_1}\right)$$

$$\sigma = -\left|\frac{z - \beta}{r_2 - r_1}\right| + i\left(\frac{r - r_1}{r_2 - r_1} - \frac{\alpha - r_1}{r_2 - r_1}\right)$$

the series (57) may be expressed more conveniently

$$G(r,z;\ \alpha,\beta) = \sqrt{\alpha r}\ R\ell \sum_{1}^{\infty} \frac{1}{2n\pi}\left(e^{n\pi\lambda} - e^{n\pi\sigma}\right) \tag{59}$$

So long as $\left|\frac{z - \beta}{r_2 - r_1}\right| > 0$ the series may be summed directly to give

$$G(r,z;\ \alpha,\beta) = \frac{\sqrt{\alpha r}}{2\pi} R\ell \left[\log_e\left(1 - e^{\pi\lambda}\right) - \log_e\left(1 - e^{\pi\sigma}\right)\right]$$

$$= \frac{\sqrt{\alpha r}}{2\pi} \log_e \left|\frac{1 - e^{\pi\lambda}}{1 - e^{\pi\sigma}}\right| \tag{60}$$

Since the modulus of the complex variable σ never vanishes, the Green's function has a logarithmic infinity at $|\lambda| = 0$; that is, $\alpha = r$ and $z = \beta$.

EVALUATION OF PARTICULAR EXAMPLES

When the information on head distribution, angular momentum, blade forces, or blade shape is given for an axial turbomachine in analytical form, there is no difficulty in finding explicit expressions for $\psi^{(1)}(r)$ and $\psi^{(2)}(r,z)$. However, the integral of equation (52) for $\psi^{(3)}(r,z)$, the deviation of the solutions from the simple equilibrium solution, is usually quite laborious to evaluate because even in elementary cases the result appears as an infinite series of Bessel's functions which must be summed to a reasonable accuracy. This method was employed in computing the results given in reference 18. But since such a considerable amount of computation is required for each example, it seems reasonable to take advantage of the universal nature of the influence function $K(r,z;\ \alpha,\beta)$ and perform the integration of equation (52) by a numerical procedure. There is no difficulty about any numerical integration inasmuch as the function $K(r,z;\ \alpha,\beta)$ has only a simple discontinuity along the line $z = \beta$. The antisymmetric nature of $K(r,z;\ \alpha,\beta)$ is shown by the contour sketch of the function in figure 6. However, any manner of numerical evaluation requires the tabulation of

the function $K(r,z;\ \alpha,\beta)$, which in turn necessitates calculation of the characteristic values ϵ_n and the characteristic functions $U_1(\epsilon_n r)$. Furthermore, the entire tabulation must be repeated for each value of the hub-to-tip diameter ratio desired; in the present case only the value of $r_1/r_2 = 0.6$ will be treated.

The first six values of $\epsilon_n r_1$ are tabulated in reference 24, but their tabulation proved to be of insufficient accuracy for the present work. Consequently, the first 10 roots of equation (41) were determined by standard iteration methods for $r_1/r_2 = 0.6$. The results, together with the asymptotic values (equation (56)), are given in the following table:

n	ϵ_n	Asymptotic value
1	4.758051	4.712389
2	9.448369	9.424778
3	14.182998	14.137167
4	18.861456	18.849556
5	23.571475	23.561945
6	28.282281	28.274334
7	32.993535	32.274334
8	37.705076	37.699113
9	42.416800	42.411502
10	47.128604	47.123891

It is observed that if the series to be calculated is rapidly convergent the asymptotic values of ϵ_n may be employed for $n > 10$ with sufficient accuracy. With the characteristic values known, the characteristic functions $U_1(\epsilon_n r)$ were computed using the tables of Watson (reference 25) and the British Association (reference 26) at 21 points in the range of $1 \leqq r/r_1 \leqq 1.666667$. The values of these functions appear in table I.

Finally, the sum of the first 10 terms of the series for $K(r,z;\ \alpha,\beta)$ was calculated (using punched-card methods) and the results are presented in table II. The influence function $K(r,z;\ \alpha,\beta)$ has symmetry properties which allow economy of both calculation and tabulation. First the function depends on the absolute value $|z - \beta|$ and consequently need be tabulated only for the positive difference and not for various values of z and β independently. Furthermore, the function is symmetric with respect to r and α; that is,

$$K(r,z;\ \alpha,\beta) \equiv K(\alpha,z;\ r,\beta) \tag{61}$$

Hence it is not necessary to tabulate for all combinations of r and α. In table II are given values of the function for $0.033333 \leqq \frac{z - \beta}{r_1} \leqq 1.30$ and $1.00 \leqq r/r_1 \leqq 1.666667$ on each page for a given value of $1.00 \leqq \alpha/r_1 < 1.666667$.

With this tabular material, the first integral in equation (52) may be evaluated by the elementary sum

$$\psi^{(3)}\left(r_i,z_j\right) \approx \Delta\alpha\ \Delta\beta \sum_{q=1,2,\ldots}^{21} \sum_{p=2,4,\ldots}^{20} \frac{\partial f}{\partial \beta}\left(\alpha_p,\beta_q\right)K\left(r_i,z_j;\ \alpha_p,\beta_q\right) \tag{62}$$

as was done in the present case, or by more nearly exact methods such as Simpson's parabolic rule or higher-order approximations. The calculations presented in the following discussion were carried out using punched-card methods for the double summation. The grid used in integration, divided into elements by r_i, z_j, α_p, and β_z, is shown in figure 7.

As an example of the method just described, two problems have been carried out using values of the blade aspect ratio of 2 and 2/3 so that the results are illustrated for both high and low aspect ratios. Although not in complete agreement with usual aeronautical usage, the aspect ratio will be used to denote the blade length divided by the axial projection of the blade upon the meridional plane. The following data are assumed:

(1) Uniform flow of magnitude w_o far upstream; zero tangential velocity

(2) The radial component of the leading-edge blade force vanishes

(3) The distribution of angular momentum is, if c is the blade chord,

$$\left.\begin{aligned}
\frac{vr}{w_o r_1} &= 0 && -\frac{1}{2} \geqq \frac{z}{c} \\
\frac{vr}{w_o r_1} &= a\left(\frac{z}{c} + \frac{1}{2}\right)\left(\frac{r}{r_1}\right)^2 && -\frac{1}{2} \leqq \frac{z}{c} \leqq 0 \\
\frac{vr}{w_o r_1} &= a\left[\frac{3}{4} - \left(\frac{1}{2} - \frac{z}{c}\right)^2\right]\left(\frac{r}{r_1}\right)^2 && 0 \leqq \frac{z}{c} \leqq \frac{1}{2} \\
\frac{vr}{w_o r_1} &= \frac{3}{4}\, a\left(\frac{r}{r_1}\right)^2 && \frac{z}{c} \geqq \frac{1}{2}
\end{aligned}\right\} \tag{63}$$

and is shown schematically in figure 8

The basic stream function $\psi^{(1)}(r)$ is easily calculated since the flow upstream is uniform and axial. Then

$$\Psi_1\left(\frac{r}{r_1}\right) \equiv \frac{\psi^{(1)}(r)}{\frac{1}{2}\, w_o r_1^{\,2}} = -\left(\frac{r}{r_1}\right)^2 \tag{64}$$

Furthermore, the function $f(r,z)$ follows directly from the distribution of angular momentum:

$$\left.\begin{aligned}
f(r,z) &= 0 && -\frac{1}{2} \geqq \frac{z}{c} \\
f(r,z) &= 2a^2\left(\frac{z}{c} + \frac{1}{2} - \frac{\omega r_1}{w_o a}\right)\left(\frac{z}{c} + \frac{1}{2}\right)\frac{r}{r_1} && -\frac{1}{2} \leqq \frac{z}{c} \leqq 0 \\
f(r,z) &= 2a^2\left[\frac{3}{4} - \left(\frac{1}{2} - \frac{z}{c}\right)^2 - \frac{\omega r_1}{w_o a}\right]\left[\frac{3}{4} - \left(\frac{1}{2} - \frac{z}{c}\right)^2\right]\frac{r}{r_1} && 0 \leqq \frac{z}{c} \leqq \frac{1}{2} \\
f(r,z) &= 2a^2\left(\frac{3}{4} - \frac{\omega r_1}{w_o a}\right)\frac{3}{4}\left(\frac{r}{r_1}\right) && \frac{z}{c} \geqq \frac{1}{2}
\end{aligned}\right\} \tag{65}$$

Then from integration of equation (50), the stream function $\psi^{(2)}(r,z)$ may be written:

$$\left.\begin{aligned}
\frac{\psi^{(2)}}{\frac{1}{2}w_o r_1^2} &= 0 && -\frac{1}{2} \geqq \frac{z}{c} \\
\frac{\psi^{(2)}}{\frac{1}{2}w_o r_1^2} &= \frac{a^2}{2}\left(\frac{z}{c} + \frac{1}{2} - \frac{\omega r_1}{w_o a}\right)\left(\frac{z}{c} + \frac{1}{2}\right)\left[\left(\frac{r}{r_1}\right)^2 - \left(\frac{r_2}{r_1}\right)^2\right]\left[\left(\frac{r}{r_1}\right)^2 - 1\right] \\
& && -\frac{1}{2} \leqq \frac{z}{c} \leqq 0 \\
\frac{\psi^{(2)}}{\frac{1}{2}w_o r_1^2} &= \frac{a^2}{2}\left[\frac{3}{4} - \left(\frac{1}{2} - \frac{z}{c}\right)^2 - \frac{\omega r_1}{w_o a}\right]\left[\frac{3}{4} - \left(\frac{1}{2} - \frac{z}{c}\right)^2\right]\left[\left(\frac{r}{r_1}\right)^2 - \right. \\
&\quad \left.\left(\frac{r_2}{r_1}\right)^2\right]\left[\left(\frac{r}{r_1}\right)^2 - 1\right] && 0 \leqq \frac{z}{c} \leqq \frac{1}{2} \\
\frac{\psi^{(2)}}{\frac{1}{2}w_o r_1^2} &= \frac{a^2}{2}\,\frac{3}{4}\left(\frac{3}{4} - \frac{\omega r_1}{w_o a}\right)\left[\left(\frac{r}{r_1}\right)^2 - \left(\frac{r_2}{r_1}\right)^2\right]\left[\left(\frac{r}{r_1}\right)^2 - 1\right] \\
& && \frac{z}{c} \geqq \frac{1}{2}
\end{aligned}\right\} \quad (66)$$

For the evaluation of the stream function $\psi^{(3)}$ by the numerical process of equation (62), it is necessary to compute the values of $\frac{\partial}{\partial z} f(r,z)$. These are

$$\left.\begin{aligned}
\frac{\partial}{\partial \frac{z}{c}} f(r,z) &= 0 && -\frac{1}{2} \geqq \frac{z}{c} \\
\frac{\partial}{\partial \frac{z}{c}} f(r,z) &= 2a^2\left(2\,\frac{z}{c} + 1 - \frac{\omega r_1}{w_o a}\right)\frac{r}{r_1} && -\frac{1}{2} \leqq \frac{z}{c} \leqq 0 \\
\frac{\partial}{\partial \frac{z}{c}} f(r,z) &= 4a^2\left(\frac{1}{2} - \frac{z}{c}\right)\left[\frac{3}{2} - 2\left(\frac{1}{2} - \frac{z}{c}\right)^2 - \frac{\omega r_1}{w_o a}\right]\frac{r}{r_1} && 0 \leqq \frac{z}{c} \leqq \frac{1}{2} \\
\frac{\partial}{\partial \frac{z}{c}} f(r,z) &= 0 && \frac{z}{c} \geqq \frac{1}{2}
\end{aligned}\right\} \quad (67)$$

By evaluating this expression at the appropriate grid points and substituting in the summation (62), the value of $\psi^{(3)}$ follows directly.

Inasmuch as the functions $\psi^{(1)}(r)$ and $\psi^{(2)}(r,z)$ may be given analytically and their sum $\psi^{(1)} + \psi^{(2)}$ corresponds to the standard simple equilibrium solution, the principal interest is the deviation of the linearized solution from this simple solution which is $\psi^{(3)}$ itself. Consequently the distribution of $\psi^{(3)}$ and particularly the values of the axial velocity variations which are equal to $-\frac{1}{r}\frac{\partial\psi^{(3)}}{\partial r}$ have been calculated for blade aspect ratios $\frac{r_2 - r_1}{c}$ of 2.0 and 2/3 and for $\frac{r_1}{w_o a} = 4$. The change of axial velocity according to the simple equilibrium theory is shown in figure 9 while the variation of the axial velocity from that distribution given by the equilibrium theory is shown graphically in figures 10 and 11 for the high and low aspect-ratio values, respectively. It is assumed that the total work done by both blade rows is the same and as a consequence the blade row of lower aspect ratio is less heavily loaded.

The variation of the linearized axial velocity distribution from that given by the radial equilibrium theory is appreciable for the blade of large aspect ratio as was discussed in connection with the original calculations of this case in reference 18. The deviation is most serious near the leading and trailing edges of the blade row where it reaches approximately one-quarter of the total variation of the axial velocity. However, for the blade of low aspect ratio, these variations are reduced to less than half those values for the blade of large aspect ratio, that is, to a negligible amount so far as the practical problems are concerned.

MORE ACCURATE LINEARIZATION OF THE PROBLEM

The solution of the simple linearized turbomachine problem is quite adequate for many problems, but that it is inadequate in providing some particular results may be illustrated by an example. Consider an axial turbomachine with a single blade row where the blade shape is given. By knowing the normals to the imaginary blade surface, it is possible to compute, in first approximation, the value of the right side of equation (22) according to equation (32). When boundary conditions

(equations (33)) are given, the problem may be solved completely. The first term of the right-hand side of equation (32) represents the vorticity generated by the interaction of the flow with the prescribed blade row while the second term $r^2 g_1(r)$ represents the tangential vorticity distribution transported from upstream of the blade row. If the distribution of the axial velocity far upstream were changed although its mean value w_o remained constant, one would expect the solution to be changed physically for two reasons. First, the flow will be changed directly by this variation of initial condition because the vorticity transported into the field is changed. Second, the flow will be changed because the interaction between the modified approaching flow and the fixed blade surface will differ from the interaction between the original flow and the blade row. However, it is noted that the expression representing the tangential vorticity generated by the blade action, the first terms on the right side of equation (32), is unchanged by modification of the initial axial velocity distribution. This effect is clearly a result of the form chosen for the approximating stream function when the linearization for the direct problem was carried out; the stream function $-\frac{1}{2} w_o r^2$ does not account for any dependence on upstream or local flow conditions. A similar inaccuracy is also present in the linearized solution for the various formulations of the inverse problem.

In order to treat these problems adequately, a sharper linearization of the fundamental differential equation (equation (20)) must be constructed. Particularly, it is necessary to approximate the terms $\left(vr - \omega r^2\right)\frac{\partial(vr)}{\partial\psi} + \frac{rF_\psi}{V_s}$ more accurately. Again, it will be assumed that the stream surfaces are practically circular cylinders so that $F_\psi \longrightarrow F_r$. However, instead of assuming the approximating stream function to be that of the mean flow, it will be chosen to be the stream function corresponding to the true axial velocity. Then the variation of the stream function is approximately

$$\partial\psi \approx -wr\ dr \tag{68}$$

and the velocity V_s is approximately w. The vorticity-generation term may be written as

$$\left(vr - \omega r^2\right)\frac{\partial(vr)}{\partial\psi} + \frac{rF_\psi}{V_s} \approx -\frac{v - \omega r}{w}\frac{\partial}{\partial r}(vr) + \frac{rF_r}{w} \tag{69}$$

where w is the local axial velocity and is unknown. But in the direct problem the components of the normal to the blade n_r, n_θ, and n_z are known, and, since this vector is also normal to the relative fluid velocity, it follows as before that

$$un_r + (v - \omega r)n_\theta + wn_z = 0 \tag{70}$$

In axial turbomachines it is usual that n_r is a small quantity in comparison with n_θ and n_z, and the radial velocity u is inevitably small in comparison with the axial velocity w. Then to a very good approximation

$$\frac{v - \omega r}{w} = -\frac{n_z}{n_\theta} \tag{71}$$

which is precisely the first factor in the expression of equation (69). Similarly it is convenient to write

$$\frac{vr}{w_o} = r\left(\frac{v - \omega r}{w}\right)\frac{w}{w_o} + \frac{\omega r^2}{w_o}$$

$$= -r\,\frac{n_z}{n_\theta}\,\frac{w}{w_o} + \frac{\omega r^2}{w_o} \tag{72}$$

From the condition that the vectors n_r, n_θ, and n_z and F_r, F_θ, and F_z are parallel, it follows that

$$F_r = \frac{n_r}{n_\theta} F_\theta \tag{73}$$

and because of the small magnitude of F_r it seems justifiable to write, as before

$$\frac{rF_r}{w} \approx -w_o\,\frac{n_r}{n_\theta}\,r\,\frac{\partial}{\partial z}\left(\frac{n_z}{n_\theta}\,\frac{w}{w_o}\right) \approx -w_o r\,\frac{n_r}{n_\theta}\,\frac{\partial}{\partial z}\left(\frac{n_z}{n_\theta}\right) \tag{74}$$

The more nearly exact approximation to the expression given by equation (69) is therefore

$$\left(vr - \omega r^2\right)\frac{\partial(vr)}{\partial\psi} + \frac{rF_\psi}{V_s} \approx w_o\left[2\,\frac{n_z}{n_\theta}\,\frac{\omega r}{w_o} + \left(\frac{n_z}{n_\theta}\,\frac{\partial}{\partial r} - \frac{n_r}{n_\theta}\,\frac{\partial}{\partial z}\right)\frac{rn_z}{n_\theta}\right] +$$

$$w_o\,\frac{n_z}{n_\theta}\,\frac{\partial}{\partial r}\left[r\,\frac{n_z}{n}\left(\frac{w}{w_o} - 1\right)\right] \tag{75}$$

The first term in brackets of this expression is identical to the one used in the former approximation while the second term $\frac{n_z}{n_\theta}\,\frac{\partial}{\partial r}\left[r\,\frac{n_z}{n_\theta}\left(\frac{w}{w_o} - 1\right)\right]$ is the correction for the variation of axial velocity from uniform while passing through the blade row.

By writing the stream function as $\psi(r,z) = \psi^{(1)}(r,z) + \psi'(r,z)$, where $\psi^{(1)}(r)$ is the stream function assigned far upstream of the blade row, it is noted that

$$w(r,z) - w(r,-\infty) = -\,\frac{1}{r}\,\frac{\partial\psi'(r,z)}{\partial r} \tag{76}$$

Then the more nearly exact version of equation (20) which holds within the blade row may be written in the form

$$r\left[1 + \left(\frac{n_z}{n_\theta}\right)^2\right]\frac{\partial}{\partial r}\left(\frac{1}{r}\,\frac{\partial\psi'}{\partial r}\right) + \frac{1}{2r}\,\frac{\partial}{\partial r}\left(\frac{rn_z}{n_\theta}\right)^2\left(\frac{1}{r}\,\frac{\partial\psi'}{\partial r}\right) + \frac{\partial^2\psi'}{\partial z^2} = rh(r,z) \tag{77}$$

where

$$rh(r,z) = w_o\left(2\,\frac{n_z}{n_\theta}\,\frac{\omega r}{w_o} + \left(\frac{n_z}{n_\theta}\,\frac{\partial}{\partial r} - \frac{n_r}{n_z}\,\frac{\partial}{\partial z}\right)r\,\frac{n_z}{n_\theta} + \frac{n_z}{n_\theta}\,\frac{\partial}{\partial r}\left\{r\,\frac{n_z}{n_\theta}\left[\frac{w(r,-\infty)}{w_o} - 1\right]\right\}\right) \tag{78}$$

Outside the blade row, ψ' satisfies the equation

$$\frac{\partial^2\psi'}{\partial r^2} - \frac{1}{r}\,\frac{\partial\psi'}{\partial r} + \frac{\partial^2\psi'}{\partial z^2} = r\eta'(r) \tag{79}$$

where ahead of the blade row, $r\eta'(r) = 0$, and downstream of the blade row, the tangential vorticity retains a constant value along circular cylinders equal to that at which it left the blade row. That is, for $z \geqq c/2$,

$$\eta'(r) = h(r,c/2) - \frac{w_o}{r}\left[\frac{n_z}{n_\theta}\,\frac{\partial}{\partial r}\left(\frac{n_z}{n}\,\frac{\partial\psi'}{\partial r}\right)\right]_{z=c/2} \tag{80}$$

where $z = c/2$ is the z-coordinate at which the blade row terminates. Both inside and outside the blade row the boundary conditions are

$$\begin{aligned}\psi'(r_1,z) &= \psi'(r_2,z)\\ &= \psi'(r,-\infty)\\ &= \frac{1}{r}\left(\frac{\partial\psi'}{\partial r}\right)_\infty\\ &= 0\end{aligned} \tag{81}$$

Because of the function $\frac{n_z}{n_\theta}(r,z)$ in the first term of the left side of equation (77), which depends upon the particular blade shape assigned for each problem, the equation is mathematically difficult to solve except under quite restrictive assumptions on the blade shape. Furthermore, even if quite general solutions to this equation could be obtained, there still remains the problem of matching that solution with those holding outside the blade row; each solution would have a different set of characteristic functions for the radial direction. Hence it is appropriate to seek an approximate solution.

It is possible to split the function $\psi'(r,z)$ into two parts as before, the first being the simple radial equilibrium solution and the second representing the deviation from this solution caused by the finite radial acceleration. The equation satisfied by the simple radial equilibrium solution is obtained from equation (77) by deleting the term $\frac{\partial^2\psi'}{\partial z^2}$ and treating z as a parameter. Then, if $\psi^{(2)}(r,z)$ is this solution, it follows by rearrangement of the terms that

$$\left[1 + \left(\frac{n_z}{n_\theta}\right)^2\right]\frac{d}{dr}\left(\frac{1}{r}\frac{d\psi^{(2)}}{dr}\right) + \frac{1}{2r^2}\frac{d}{dr}\left(\frac{rn_z}{n_\theta}\right)^2\frac{d\psi^{(2)}}{r\,dr} = h(r,z) \tag{82}$$

with the boundary conditions

$$\begin{aligned}\psi^{(2)}(r,z) &= \psi^{(2)}{}_{r_2,z}\\ &= \psi^{(2)}{}_{r,-\frac{c}{2}}\\ &= 0\end{aligned}$$

The above solution holds within the blade row; $\psi^{(2)}(r,z)$ vanishes upstream of the blade row and downstream of the blade row retains the value it had at the trailing edge of the blade row. The function $\psi^{(2)}(r,z)$ therefore yields a solution at $z = \infty$, but, in contrast with the situation in the previous treatment, this is not the correct value of the stream function there because the correct flow, and hence tangential vorticity, at the blade trailing edge is not known. Therefore

a function $\psi^{(3)}$ which would complete the solution of equation (77) will not, in general, vanish at $z = \infty$. Consequently the solution

$$\psi_1^{(3)}(r,z) = \int_{r_1}^{r_2} \int_{-\infty}^{\infty} K(r,z;\ \alpha,\beta)\ \frac{\partial}{\partial\beta}\left[h(\alpha,\beta) - \frac{1}{\alpha}\frac{n_z}{n_\theta}\frac{\partial}{\partial\alpha}\left(\frac{n_z}{n_\theta}\frac{\partial\psi_1^{(2)}}{\partial\alpha}\right)\right] d\alpha\ d\beta \tag{83}$$

is only an approximation, although a quite reasonable one if the aspect ratio is not too large. Approximations of better accuracy may be obtained by employing an iteration process consisting of the sequence of problems

$$\left.\begin{cases} \dfrac{d}{dr}\left(\dfrac{1}{r}\dfrac{d\psi_2^{(2)}}{dr}\right) = h(r,z) - \dfrac{1}{r}\dfrac{n_z}{n_\theta}\dfrac{\partial}{\partial r}\left[\dfrac{n_z}{n}\dfrac{\partial}{\partial r}\left(\psi_1^{(2)} + \psi_1^{(3)}\right)\right] \\ \psi_2^{(3)} = \displaystyle\int_{r_1}^{r_2}\int_{-\infty}^{\infty} K(r,z;\ \alpha,\beta)\ \frac{\partial}{\partial\beta}\left\{-\frac{1}{\alpha}\frac{n_z}{n_\theta}\frac{\partial}{\partial\alpha}\left[\frac{n_z}{n_\theta}\frac{\partial}{\partial\alpha}\left(\psi_2^{(2)} + \psi_1^{(3)}\right)\right]\right\} d\alpha\ d\beta \\ \quad\vdots \qquad\qquad\qquad\qquad \vdots \\ \dfrac{d}{dr}\left(\dfrac{1}{r}\dfrac{d\psi_n^{(2)}}{dr}\right) = h(r,z) - \dfrac{1}{r}\dfrac{n_z}{n_\theta}\dfrac{\partial}{\partial r}\left[\dfrac{n_z}{n_\theta}\dfrac{\partial}{\partial r}\left(\psi_{n-1}^{(2)} + \psi_{n-1}^{(3)}\right)\right] \\ \psi_n^{(3)} = \displaystyle\int_{r_1}^{r_2}\int_{-\infty}^{\infty} K(r,z;\ \alpha,\beta)\ \frac{\partial}{\partial\beta}\left\{-\frac{1}{\alpha}\frac{n_z}{n_\theta}\frac{\partial}{\partial\alpha}\left[\frac{n_z}{n_\theta}\frac{\partial}{\partial\alpha}\left(\psi_n^{(2)} + \psi_{n-1}^{(3)}\right)\right]\right\} d\alpha\ d\beta \end{cases}\right\} \tag{84}$$

The accuracy of the solution $\psi = \psi^{(1)} + \psi_n^{(2)} + \psi_n^{(3)}$ will probably be increased by continued iteration. The work involved in carrying out such an iteration is considerable when done analytically but should not be excessive when a punched-card machine is used. However, the problem meriting more computation than is involved in the solution $\psi \approx \psi^{(1)} + \psi_2^{(2)} + \psi_2^{(3)}$ is a most exceptional one. Usually the simpler analysis described in the next section will be adequate.

SIMPLIFIED APPROXIMATION TO LINEARIZED SOLUTION

The process described for the solution of the linearized problem in turbomachine theory consists of superposing the mean axial velocity, the additional velocities due to the presence of the blade rows which would exist if the radial acceleration were neglected, and finally the correction of this simple equilibrium solution for the effect of radial acceleration. The first two parts are extremely easy to solve, the second requiring only a simple quadrature. The difficulties, when they are appreciable, arise in connection with the third part and in particular with the evaluation of an integral

$$\psi^{(3)}(r,z) = \int_{r_1}^{r_2} \int_{-\infty}^{\infty} \frac{\partial f}{\partial \beta} K(r,z;\ \alpha,\beta)\ d\alpha\ d\beta +$$

$$\int_{r_1}^{r_2} \sum \Big[f(\alpha,z)\Big]_{z_i} K(r,z;\ \alpha,z_i)\ d\alpha \tag{85}$$

where the function $K(r,z;\ \alpha,\beta)$ is given by equation (47). As shown in figure 6, the function $K(r,z;\ \alpha,\beta)$ has a discontinuity along the line $z = \beta$ which is of considerable physical interest.

Suppose, for the moment, that the blade row in question is the only one in the field and is replaced by a discontinuity or "actuator disk" which provides the same change in angular momentum as did the entire blade row it replaced. Then equation (85) is reduced to the single integral

$$\psi^{(3)}(r,z) = \int_{r_1}^{r_2} f(\alpha,z_1)K(r,z;\ \alpha,z_1)\ d\alpha \tag{86}$$

The complete solution for the stream function is continuous at the actuator. The solution $\psi^{(2)}(r,z)$, however, is discontinuous across the actuator disk and consequently the discontinuity in $\psi^{(3)}(r,z)$ is of proper magnitude and sign to make the sum continuous. Therefore

$$\psi^{(3)}(r,z_{1+}) - \psi^{(3)}(r,z_{1-}) = -\left[\psi^{(2)}(r,\infty) - \psi^{(2)}(r,-\infty)\right] \tag{87}$$

Furthermore the function $K(r,z;\ \alpha,\beta)$ is antisymmetric in $z - \beta$ so that it also follows that

$$\psi^{(3)}(r,z_{1+}) = -\psi^{(3)}(r,z_{1-}) = \frac{\psi^{(2)}(r,\infty) - \psi^{(2)}(r,-\infty)}{2} \tag{88}$$

that is, the discontinuity in $\psi^{(3)}(r,z)$ is equal to the change in stream function between stations far downstream and upstream, respectively, and is antisymmetric. Now, by writing the function $K(r,z;\ \alpha,\beta)$ in detail,

$$\psi^{(3)}(r,z) = \operatorname{sgn}(\beta - z) \sum \int_{r_1}^{r_2} f(\alpha,z_1)\frac{\alpha U_1(\epsilon_n\alpha)rU_1(\epsilon_n r)}{2\epsilon_n^2\gamma_n^2}\ e^{-\epsilon_n|z-\beta|}\ d\alpha$$

it follows from the reasoning above that

$$\psi^{(3)}(r,z_1+) = -\psi^{(3)}(r,z_1-)$$

$$= \operatorname{sgn}(\beta - z) \sum \int_{r_1}^{r_2} f(\alpha,z) \frac{\alpha U_1(\epsilon_n\alpha) r U_1(\epsilon_n r)}{2\epsilon_n^2\gamma_n^2} d\alpha$$

$$= \frac{\psi^{(2)}(r,\infty) - \psi^{(2)}(r,-\infty)}{2} \tag{89}$$

inasmuch as all exponential functions become unity. The stream functions $\psi^{(2)}(r,\infty)$ and $\psi^{(2)}(r,-\infty)$ are known from the previous calculations and consequently equation (89) expresses the sum of the infinite series of integrals in a very simple form which it is convenient to use in the following approximation. In the actual solution, the various Bessel components of this series vary as different exponential functions of z and $e^{-\epsilon_n|z|}$, where ϵ_n increases approximately in proportion to n and the series is rapidly convergent for $z \neq 0$. For the approximation, it will be assumed that a sufficiently accurate result may be achieved by determining a parameter λ' such that all Bessel components vary with the factor $e^{-\lambda'|z|}$; that is,

$$\sum \int_{r_1}^{r_2} f(\alpha,\beta) \frac{\alpha U_1(\epsilon_n\alpha) r U_1(\epsilon_n r)}{2\epsilon_n^2\gamma_n^2} e^{-\epsilon_n|z-\beta|} d\alpha \approx$$

$$\left[\sum \int_{r_1}^{r_2} f(\alpha,\beta) \frac{\alpha U_1(\epsilon_n\alpha) r U_1(\epsilon_n r)}{2\epsilon_n^2\gamma_n^2} d\alpha\right] e^{-\lambda'|z-\beta|} \tag{90}$$

If an appropriate value of λ' may be found, then, from equations (89) and (90),

$$\psi^{(3)}(r,z) \approx \operatorname{sgn}(\beta - z)\left[\frac{\psi^{(2)}(r,\infty) - \psi^{(2)}(r,-\infty)}{2}\right]e^{-\lambda'|z-\beta|} \tag{91}$$

It remains only to provide a consistent manner of finding the appropriate value of the exponent λ'. It will be convenient to write the exponent $\lambda'|z - \beta|$ in the form

$$\lambda'|z - \beta| = \lambda \frac{c}{r_2 - r_1}\left|\frac{z - \beta}{c}\right| \equiv \frac{\lambda}{R}\left|\frac{z - \beta}{c}\right| \tag{92}$$

where c is the projected blade chord and the symbol R is used to denote the projected aspect ratio of the blade. Now if the tangential vorticity computed from this approximate stream function were constant along concentric cylinders, it would be a true solution to the linearized problem. This property suggests that a possible method for determining λ is to choose such a value of λ that the mean square variation of the tangential vorticity is a minimum along a streamline. If the vorticity computed from the stream function of equation (91) is denoted $\overline{\eta}(r,z)$, the integral of the square deviation of $\frac{1}{r}\frac{\partial}{\partial z}\overline{\eta}$ may be written

$$\int_{r_1}^{r_2}\int_{z=\beta}^{\infty}\left(\frac{1}{r}\frac{\partial\overline{\eta}}{\partial z}\right)^2 r\, dr(z - \beta)\, dz \tag{93}$$

where, because of the antisymmetry, the integral need be extended only over the volume downstream of the discontinuity. Because the exponential approximation is inherently poor in the neighborhood of the discontinuity and improves at great distances from the actuator disk, the errors have been weighted so as to take more account of those far away from the blade row and less account of those very near the actuator disk. Downstream of the discontinuity the variable part of the approximate stream function is

$$\overline{\psi}^{(3)} = rk(r)e^{-(\lambda/R)|z-\beta/c|}$$

where

$$k(r) = \frac{\psi^{(2)}(r,\infty) - \psi^{(2)}(r,-\infty)}{2r} \tag{94}$$

Now by calculating the tangential vorticity, evaluating the integral (93), and equating its λ variation to zero it follows that

$$\lambda^2 = \frac{\int_{r_1}^{r_2} (k')^2 r\, dr + \int_{r_1}^{r_2} k^2 \frac{dr}{r}}{\int_{r_1}^{r_2} \left(\frac{k}{r_2 - r_1}\right)^2 r\, dr} \tag{95}$$

When, for example, the angular momentum change across the actuator disk is prescribed to be of the form $rv \sim r^2$, the values of λ may easily be written down explicitly

$$\lambda^2 = \frac{\left(\frac{r_2}{r_1}\right)^2 \left[\left(\frac{r_2}{r_1}\right)^2 - 1\right]^3}{\frac{1}{2}\left[\left(\frac{r_2}{r_1}\right)^4 - 1\right]\left[\left(\frac{r_2}{r_1}\right)^4 - 8\left(\frac{r_2}{r_1}\right)^2 + 1\right] + \left(\frac{r_2}{r_1}\right)^2 \log_e \left(\frac{r_2}{r_1}\right)^2} \tag{96}$$

The resulting values of λ are shown in figure 12 for various ratios of hub diameter to tip diameter.[1] It is to be noted in particular that for this distribution of angular momentum, the values of λ are very nearly equal to π. Thus the first characteristic number ϵ_1 is of dominating importance in determining the rate of formation of the velocity profile. The terms having large values of ϵ_n decay very rapidly and soon disappear in the numerical result.

---

[1]The value of λ for $r_2/r_1 = 5/3$ was given incorrectly in reference 18. This error was pointed out by Dr. R. H. Sabersky.

When using the exponential approximation, it is often convenient to use the axial velocities directly inasmuch as they are the data of principal interest. Hence, according to equation (91),

$$w^{(3)}(r,z) = \operatorname{sgn}(\beta - z)\left(\frac{w^{(2)}(r,\infty) - w^{(2)}(r,-\infty)}{2}\right)e^{-(\lambda/R)|(z-\beta/c)|} \tag{97}$$

where $w^{(2)}(r,-\infty)$ and $w^{(2)}(r,\infty)$ are the axial velocity distributions given far upstream and downstream, respectively, by the simple radial equilibrium theory.

The example worked out in detail may be solved approximately by the method just described. From the results of equation (66) it follows by differentiation that

$$\left.\begin{aligned} w^{(2)}(r,-\infty) &= 0 \\ w^{(2)}(r,\infty) &= w_o a^2 \frac{39}{32}\left[1 + \left(\frac{r_2}{r_1}\right)^2 - 2\left(\frac{r}{r_1}\right)^2\right] \end{aligned}\right\} \tag{98}$$

Then if the blade is replaced by a discontinuity at $\beta = 0$ the resulting exponential approximation is

$$\frac{w^{(3)}(r,z)}{w_o a^2} = \operatorname{sgn}(\beta - z)\,\frac{39}{64}\left[2\left(\frac{r}{r_1}\right)^2 - 1 - \left(\frac{r_2}{r_1}\right)^2\right]e^{-(\lambda/R)(z/c)} \tag{99}$$

The velocity $w^{(3)}(r,z)$ represents, in this case, the deviation of the true axial velocity from the equilibrium solution corresponding to the tangential velocity discontinuity at $z = 0$.

The simplicity of the exponential approximation allows a solution for the axial velocity distribution in a multistage turbomachine. Consider the flow in a turbomachine containing N blade rows (fig. 13) the first of which has its center of loading at $z = \beta_1$, the second

at $z = \beta_2$, and the kth at $z = \beta_k$. Also let the angular momentum upstream of the first blade row be rv_1, that between the first and second be rv_2, and that between the kth and the (k + 1)th be rv_{k+1}. Assuming the axial velocity far upstream to be uniform and of magnitude w_o, the stream function $\psi^{(1)}(r)$ and the functions $\psi_k^{(2)}(r)$ may be obtained from equations (35) and (50), respectively. Or, considering the axial velocity distribution directly, the simple-equilibrium axial velocity distribution satisfies the first-order differential equation

$$r \frac{d}{dr}\left(\frac{w_{k+1} - w_k}{w_o}\right) = \left(\frac{v_k - \omega_k r}{w_o}\right)\frac{d}{r\,dr}\left(\frac{rv_k}{w_o}\right) - \left(\frac{v_{k+1} - \omega_k r}{w_o}\right)\frac{d}{dr}\left(\frac{rv_{k+1}}{w_o}\right) \tag{100}$$

where $w_o \equiv w_1$. Thus the simple radial equilibrium solution for the region between the (k - 1)th and the kth blade rows is

$$w_k(r) = w_1 + \sum_{1}^{k-1} \left(w_{n+1} - w_n\right) \tag{101}$$

that is, the sum of the increments of axial velocity caused by each of the blade rows occurring before the section under consideration. The axial velocity distribution of equation (101) is very nearly that which would hold if the blade rows were very widely spaced. When the blades are spaced more closely, as they are in any practical instance, none of these changes indicated in equation (101) is quite complete and similarly the changes which are about to occur farther downstream begin to make themselves felt. These influences are accounted for by the third component of the stream function $\psi^{(3)}(r,z)$ or its equivalent in terms of the axial velocity variation. The increment associated with the kth blade row follows from equation (97) and becomes

$$w_k^{(3)}(r,z) = \operatorname{sgn}\left(\beta_k - z\right)\left(\frac{w_{k+1}^{(2)} - w_k^{(2)}}{2}\right)e^{-\left(\lambda_k/R_k\right)\left|\left(z-\beta_k\right)/c_k\right|} \tag{102}$$

where λ_k, R_k, and c_k are the values of these parameters appropriate to the kth blade row. Therefore, the velocity at z differs from w_k by an amount equal to the sum of the variations caused by each of the blade rows.

$$\frac{w - w_k(r)}{w_o} = \frac{1}{2}\sum_{n=1}^{N} \operatorname{sgn}(\beta_n - z)\left(\frac{w_{n+1}^{(2)} - w_n^{(2)}}{w_o}\right)e^{-(\lambda_n/R_n)\left|(z-\beta_n)/c_n\right|} \tag{103}$$

This result simplifies when all blade rows have the same chord, length, and spacing, and when a mean value of λ is employed. If d is the blade spacing and the first blade row is assumed to be located at the origin, then $\beta_k = (k - 1)\,d$ and

$$\frac{w - w_k}{w_o} = \frac{1}{2}\sum_{n=1}^{N} \operatorname{sgn}(\beta_n - z)\left(\frac{w_{n+1}^{(2)} - w_n^{(2)}}{w_o}\right)e^{-\frac{\lambda}{R}\left|\frac{z-(n-1)d}{c}\right|} \tag{104}$$

For example, consider an axial turbomachine having uniform axial velocity w_o and zero tangential velocity far upstream and consisting of blade rows imparting the following changes of angular momentum:

(1) Stationary entrance guide vanes which impart a tangential velocity corresponding to "solid body" rotation: $\frac{v_2 - v_1}{w_o} = a_1 \frac{r}{r_2}$

(2) Rotating blade row with angular velocity ω which adds uniform energy over the cross section and hence imparts a tangential velocity change corresponding to a potential vortex: $\frac{v_3 - v_2}{w_o} = a_2 \frac{r_2}{r}$

(3) Alternate stationary blade rows and rotating blade rows of angular velocity ω which impart, respectively, changes of tangential velocity equal to $-2a_2 \frac{r_2}{r}$ and $2a_2 \frac{r_2}{r}$

The corresponding changes of axial velocity follow from equation (100)

$$\left.\begin{aligned}
w_1 &= w_o \\
\frac{w_2 - w_1}{w_o} &= \frac{a_1^2}{2}\left(\frac{r_1}{r_2}\right)^2\left[1 + \left(\frac{r_2}{r_1}\right)^2 - 2\left(\frac{r}{r_1}\right)^2\right] \\
\frac{w_3 - w_2}{w_o} &= a_1 a_2\left[\frac{1}{1 - \left(\frac{r_1}{r_2}\right)^2}\log_e\left(\frac{r_2}{r_1}\right)^2 - 1 - \log_e\left(\frac{r}{r_1}\right)^2\right] \\
\frac{w_{n+1} - w_n}{w_o} &= 2(-1)^n a_1 a_2\left[\frac{1}{1 - \left(\frac{r_1}{r_2}\right)^2}\log_e\left(\frac{r_2}{r_1}\right)^2 - 1 - \log_e\left(\frac{r}{r_1}\right)^2\right]
\end{aligned}\right\} \tag{105}$$

The axial velocity distribution is then easily computed from equation (104). It is particularly interesting to observe the nature of the flow through the first few stages of the turbomachine. This is done most easily by studying the shape of the stream surface which lies at the middle of the annulus far upstream of the first blade row. To determine this shape the radial velocity distribution is required, which, according to the continuity equation (2) and equations (104) and (105), is

$$\frac{u}{w_o} = \frac{\lambda}{2}\sum_1^N k_n(r)e^{-\frac{\lambda}{R}\left|\frac{z-(n-1)d}{c}\right|} \tag{106}$$

where the functions $k_n(r)$ are, in general,

$$k_n(r) = \frac{r_1}{r}\int_1^{r/r_1}\frac{w_{n+1}^{(2)} - w_n^{(2)}}{w_o}\left(\frac{r}{r_2 - r_1}\right)d\left(\frac{r}{r_1}\right) \tag{107}$$

and in the present example have the specific values

$$\left.\begin{aligned}
k_1(r) &= \frac{a_1^2}{4}\,\frac{r_1}{r_2 - r_1}\,\frac{r_1}{r}\left[1 - \left(\frac{r}{r_1}\right)^2\right]\left[\left(\frac{r}{r_2}\right)^2 - 1\right] \\
k_2(r) &= \frac{a_1 a_2}{2}\,\frac{r}{r_2 - r_1}\left[\frac{1 - \left(\frac{r_1}{r}\right)^2}{1 - \left(\frac{r_1}{r_2}\right)^2}\log_e\left(\frac{r_2}{r_1}\right)^2 - \log_e\left(\frac{r}{r_1}\right)^2\right] \\
k_n(r) &= (-1)^n a_1 a_2\,\frac{r}{r_2 - r_1}\left[\frac{1 - \left(\frac{r_1}{r}\right)^2}{1 - \left(\frac{r_1}{r_2}\right)^2}\log_e\left(\frac{r_2}{r_1}\right)^2 - \log_e\left(\frac{r}{r_1}\right)^2\right]
\end{aligned}\right\} \quad (108)$$

For the values $\frac{r_1}{r_2} = 0.6$, $R = 2.0$, $\frac{\lambda d}{c} = 4.0$, $a_1 = 0.8$, and $a_2 = 0.1$, this stream surface is shown in figure 14 for the portion of the flow near the first few blade rows. From this result it is seen that the periodic flow is established very quickly, essentially by the time the fourth blade row is reached. The transient state resulting from the inlet vanes and the first rotor is of very short duration, partly because the distortion caused by the rotor is of the same sense as that caused by the inlet vanes and assists in completing rapidly the distortion due to the guide vanes. This is an example of "negative interference" between adjacent blade rows. Farther downstream, however, where the periodic flow is being established the interference of adjacent blade rows is positive, with the result that the distortion which would be caused by one of the blade rows existing alone is never realized. Actually without this interference the distortion caused by each of the blade rows far downstream would be nearly as great as that due to the inlet vanes.

A quantitative estimate of this interference may be achieved by considering the flow through a stage far from the inlet so that it is effectively both preceded and followed by an infinite number of identical stages. A problem similar to, but more general than, this has been treated in great detail by Wu and Wolfenstein (reference 27). By translating the origin of coordinates to the plane of the kth blade row according to $z = (k - 1)\,d + z'$, equation (104) becomes

$$\frac{w - w_k}{w_o} = -\frac{1}{2} e^{-\frac{\lambda z'}{Rc}} \sum_{n=1}^{k-1} \frac{w_{n-1}^{(2)} - w_n^{(2)}}{w_o} e^{-\frac{\lambda}{R}(k-n)\frac{d}{c}} +$$

$$\frac{1}{2} e^{\frac{\lambda z'}{Rc}} \sum_{n=k}^{N} \frac{w_{n+1}^{(2)} - w_n^{(2)}}{w_o} e^{\frac{\lambda}{R}(k-n)\frac{d}{c}} \tag{109}$$

If the stage is so deeply imbedded that the effect of the first two blade rows is suppressed, then, according to equation (105),

$$\frac{w_{n+1} - w_n}{w_o} = (-1)^n \frac{\Delta w}{w_o}$$

Furthermore from equation (101) the velocity distribution w_k is periodic of period $2k$ and may be expressed in the form

$$\frac{w_k}{w_o} = \frac{\overline{w}}{w_o} + (-1)^{k-1} \frac{1}{2} \frac{\Delta w}{w_o}$$

where $\overline{w}/w_o$ is the mean velocity distribution about which the flow fluctuates. Then if in equation (109) the index of the first summation is transformed to $j = k - 1 - n$ and that of the second summation to $j = n - k$, equation (109) may be written

$$\frac{w - \overline{w}}{w_o} = (-1)^{k-1} \frac{1}{2} \frac{\Delta w}{w_o} \left[1 - e^{-\frac{\lambda}{R}\left(\frac{z'+d}{c}\right)} \sum_{k-2}^{0} (-1)^j e^{-\frac{\lambda}{R}\frac{jd}{c}} - e^{\frac{\lambda}{R}\frac{z'}{c}} \sum_{0}^{N-k} (-1)^j e^{\frac{\lambda}{R}\frac{jd}{c}} \right] \tag{110}$$

Now for the deeply imbedded stage $k - 2 \longrightarrow \infty$ and $N - k \longrightarrow \infty$; the occurrence of $(-1)^{k-1}$ preceding the whole expression implies merely a difference of sign for even or odd blade rows, that is, for rotors or stators. Then each of the summations is a geometric series which gives the result

$$\frac{w - \overline{w}}{w_o} = (-1)^{k-1} \frac{1}{2} \frac{\Delta w}{w_o} \left[1 - \frac{\cosh \frac{\lambda}{R}\left(\frac{z' + \frac{1}{2} d}{c}\right)}{\cosh \frac{\lambda}{R} \frac{d}{2c}} \right] \tag{111}$$

which is valid in the range $-d \leqq z' \leqq 0$, that is, between the $(k - 1)$th and kth blade rows. From this result it is clear that the distortion from the mean distribution $\overline{w}$ vanishes at the plane of each blade row and reaches a maximum midway between the two blade rows; that is, $z' = -\frac{1}{2} d$. If the blade rows were separated by a great distance, the variation of the axial velocity profile from the mean would be $\frac{1}{2} \frac{\Delta w}{w_o}$ at this point. However, because of the mutual interference this distortion is reduced by a factor

$$1 - \frac{1}{\cosh \frac{\lambda}{2}\left(\frac{d}{r_2 - r_1}\right)} \tag{112}$$

For the value of $\lambda = \pi$, the distortion factor is shown in figure 15 in terms of the blade-spacing ratio $S = \frac{r_2 - r_1}{d}$. When the turbomachine blades have a very low blade-spacing ratio, that is, of the order unity, practically the full change of velocity profile takes place and for $S = 2.0$ the variation is still significant. On the other hand for blade-spacing ratios of 3.0 or over, the distortion factor has decreased to such a low value that the periodic changes of the axial velocity profile are negligible.

One great advantage of the exponential approximation is the ease with which it may be employed in the treatment of the direct problem. In the direct problem, the flow is to be calculated where the blade shape is given, using as a boundary condition the fact that the flow relative to the blade must be tangential to the blade surface. This

condition is difficult to satisfy, even when the exponential approximation is employed, and requires the solution of an integral equation or a related iteration procedure. However, in view of the determining nature of the condition at the blade trailing edge, an adequate approximation will be obtained by relaxing the condition that the flow be tangential to the given surface at all points, but satisfying the condition of tangency only at the trailing edge of the blade row. Consequently it is necessary to prescribe only the flow conditions upstream of a blade row, its trailing-edge-angle distribution, and its angular velocity.

If ϕ is the angle made by the trailing edge with a plane normal to the axis, then, according to the approximation of equation (71),

$$\tan \phi = \frac{v_T - \omega r}{w_T} \tag{113}$$

where the subscript T denotes conditions at the trailing edge of the blade row. If the small difference between the tangential velocity at the trailing edge and that far downstream is neglected, then $v_T \approx v_2$. Furthermore, if the distance from the center of blade loading to the trailing edge is l, the relation between the axial velocity at the trailing edge and that far downstream may be calculated from the exponential approximation

$$\left(\frac{w_T}{w_o} - \frac{w_2}{w_o}\right) = -\frac{w_2 - w_1}{w_o}\,\frac{1}{2}\,e^{\frac{-\lambda l}{Rc}}$$

or

$$\frac{w_T}{w_o} = \frac{w_1}{w_o} + \frac{w_2 - w_1}{w_o}\left(1 - \frac{1}{2}\,e^{\frac{-\lambda l}{Rc}}\right) \tag{114}$$

According to the information obtained in studying the more accurate linearized solution, the equation governing the process shall be taken as

$$\frac{d}{dr}\left(\frac{w_2 - w_1}{w_o}\right) = \frac{v_1 - \omega r}{w_1} \frac{d}{r\,dr} \frac{rv_1}{w_o} - \frac{v_2 - \omega r}{w_2} \frac{d}{r\,dr} \frac{rv_2}{w_o} \tag{115}$$

where the influence of axial velocity variation is explicit in the denominator, instead of the corresponding equation (100) $(k = 1)$ which suffices for the inverse problem. The problem then, using the relations (113) and (114), is to reduce equation (115) to one which expresses the downstream axial velocity w_2 in terms of the blade speed, blade discharge angle, and the known inlet condition. The term $\frac{v_2 - \omega r}{w_2}$ can be written with good approximation

$$\frac{v_2 - \omega r}{w_2} \approx \frac{v_T - \omega r}{w_T} \frac{w_T}{w_2}$$

$$= \tan \phi \frac{w_T}{w_1 + (w_2 - w_1)}$$

$$\approx \tan \phi \frac{w_T}{w_1}\left(1 - \frac{w_2 - w_1}{w_1}\right)$$

$$\approx \tan \phi \frac{w_T}{w_1}\left(1 - \frac{w_2 - w_1}{w_o}\right)$$

Then, using equation (114),

$$\frac{v_2 - \omega r}{w_2} \approx \tan \phi\left(1 - \frac{1}{2} \frac{w_2 - w_1}{w_o} e^{\frac{-\lambda l}{Rc}}\right) \tag{116}$$

Similarly the term

$$\frac{rv_2}{w_o} \equiv r\left(\frac{v_2 - \omega r}{w_o} + \frac{\omega r}{w_2}\right)$$

may be approximated by writing

$$\frac{v_2 - \omega r}{w_o} \approx \frac{v_T - \omega r}{w_T} \frac{w_T}{w_o}$$

$$= \tan \phi\left[\frac{w_1}{w_o} + \frac{w_2 - w_1}{w_o}\left(1 - \frac{1}{2} e^{\frac{-\lambda l}{Rc}}\right)\right] \tag{117}$$

Consequently the term $\frac{v_2 - \omega r}{w_2} \frac{d}{r\,dr}\left(\frac{rv_2}{w_o}\right)$ of equation (115) becomes

$$\frac{v_2 - \omega r}{w_2} \frac{d}{r\,dr} \frac{rv_2}{w_o} \approx \tan \phi\left(1 - \frac{1}{2} \frac{w_2 - w_1}{w_o} e^{\frac{-\lambda l}{Rc}}\right)\frac{d}{r\,dr}\, r\left\{\tan \phi\left[\frac{w_1}{w_o} + \right.\right.$$

$$\left.\left.\frac{w_2 - w_1}{w_o}\left(1 - \frac{1}{2} e^{\frac{-\lambda l}{Rc}}\right)\right] + \frac{\omega r}{w_2}\right\}$$

which can be simplified by neglecting second-order terms in $\frac{w_2 - w_1}{w_o}$ and its derivatives

$$\frac{v_2 - \omega r}{w_2} \frac{d}{r\,dr} \frac{rv_2}{w_o} \approx \left(1 - \frac{1}{2} e^{\frac{-\lambda l}{Rc}}\right) \tan^2\phi \frac{d}{dr}\left(\frac{w_2 - w_1}{w_o}\right) +$$

$$\frac{w_2 - w_1}{w_o}\left[\left(1 - \frac{1}{2} e^{\frac{-\lambda l}{Rc}}\right) \tan\phi \frac{d}{r\,dr} r \tan\phi\right]$$

$$\approx \tan\phi \frac{d}{r\,dr} r\left(\tan\phi \frac{w_1}{w_o} + \frac{\omega r}{w_o}\right)\left(1 - \frac{1}{2} e^{\frac{-\lambda l}{Rc}} \frac{w_2 - w_1}{w_o}\right)$$

Inasmuch as both $\frac{1}{2} e^{\frac{-\lambda l}{Rc}}$ and $\frac{w_2 - w_1}{w_o}$ are usually small compared with unity, the second parenthesis of the last term is, with sufficient accuracy,

$$1 - \frac{1}{2} e^{\frac{-\lambda l}{Rc}} \frac{w_2 - w_1}{w_o} \approx 1$$

The principal relation, equation (115), may thus be written in good approximation

$$\left[1 + \left(1 - \frac{1}{2} e^{\frac{-\lambda l}{Rc}}\right) \tan^2\phi\right]\frac{d}{dr}\left(\frac{w_2 - w_1}{w_o}\right) + \frac{\left(1 - \frac{1}{2} e^{\frac{-\lambda l}{Rc}}\right)}{2r^2} \frac{d}{dr}\left(r^2\tan^2\phi\right) \frac{w_2 - w_1}{w_o} +$$

$$\frac{\tan\phi}{r} \frac{d}{dr} r\left(\frac{w_1}{w_o} \tan\phi + \frac{\omega r}{w_o}\right) - \frac{v_1 - \omega r}{w_1} \frac{d}{r\,dr}\left(\frac{rv_1}{w_o}\right) = 0 \tag{118}$$

This linear first-order differential equation can be solved quite generally when blade discharge angles, blade angular velocities, and upstream conditions are given. The single boundary condition required is the continuity relation which may be written as

$$\int_{r_1}^{r_2} \frac{w_2 - w_1}{w_o} r \, dr = 0 \tag{119}$$

For example, if the flow far upstream is uniform and has no tangential component, and the blade discharge angles are given by $\tan \phi = \gamma \frac{r}{r_2}$, where γ is a constant, the differential equation (equation (118)) may be rewritten in the dimensionless form

$$\frac{d}{d(r/r_2)}\left[1 + \gamma^2\left(1 - \frac{1}{2} e^{\frac{-\lambda l}{Rc}}\right)\left(\frac{r}{r_2}\right)^2\right]\left(\frac{w_2 - w_1}{w_o}\right) + \frac{d}{d(r/r_2)} \gamma\left(\gamma - \frac{\omega r_2}{w_o}\right)\left(\frac{r}{r_2}\right)^2 = 0$$

This equation integrates directly to give

$$\left[1 + \gamma^2\left(1 - \frac{1}{2} e^{\frac{-\lambda l}{Rc}}\right)\left(\frac{r}{r_2}\right)^2\right]\frac{w_2 - w_1}{w_o} = \gamma\left(\gamma - \frac{wr_2}{w_o}\right)\left[C - \left(\frac{r}{r_2}\right)^2\right] \tag{120}$$

where C is a constant of integration. By applying the continuity condition (equation (119)) it follows that

$$\int_{r_1/r_2}^{1} \frac{\left(\frac{r}{r_2}\right)^3 d\left(\frac{r}{r_2}\right)}{1 + \gamma^2\left(1 - \frac{1}{2} e^{\frac{-\lambda l}{Rc}}\right)\left(\frac{r}{r_2}\right)^2} d\left(\frac{r}{r_2}\right) = C \int_{r_1/r_2}^{1} \frac{\left(\frac{r}{r_2}\right) d\left(\frac{r}{r_2}\right)}{1 + \gamma^2\left(1 - \frac{1}{2} e^{\frac{-\lambda l}{Rc}}\right)\left(\frac{r}{r_2}\right)^2}$$

so that the constant of integration is

$$C = \frac{1 - \left(\frac{r_1}{r_2}\right)^2}{\log_e \dfrac{1 + \gamma^2\left(1 - \frac{1}{2}\, e^{\frac{-\lambda l}{Rc}}\right)}{1 + \gamma^2\left(1 - \frac{1}{2}\, e^{\frac{-\lambda l}{Rc}}\right)\left(\frac{r_1}{r_2}\right)^2}} - \frac{1}{1 + \gamma^2\left(1 - \frac{1}{2}\, e^{\frac{-\lambda l}{Rc}}\right)}$$

The logarithmic term in this expression may be written approximately

$$\frac{1 - \left(\frac{r_1}{r_2}\right)^2}{-\log\left\{1 - \dfrac{\gamma^2\left(1 - \frac{1}{2}\, e^{\frac{-\lambda l}{Rc}}\right)\left[1 - \left(\frac{r_1}{r_2}\right)^2\right]}{1 + \gamma^2\left(1 - \frac{1}{2}\, e^{\frac{-\lambda l}{Rc}}\right)}\right\}} \approx \left(\frac{\gamma^2\left(1 - \frac{1}{2}\, e^{\frac{-\lambda l}{Rc}}\right)}{1 + \gamma^2\left(1 - \frac{1}{2}\, e^{\frac{-\lambda l}{Rc}}\right)}\left\{1 + \frac{1}{2}\,\frac{\gamma^2\left(1 - \frac{1}{2}\, e^{\frac{-\lambda l}{Rc}}\right)}{1 + \gamma^2\left(1 - \frac{1}{2}\, e^{\frac{-\lambda l}{Rc}}\right)}\left[1 - \left(\frac{r_1}{r_2}\right)^2\right]\right\}\right)^{-1} \approx \frac{1 + \gamma^2\left(1 - \frac{1}{2}\, e^{\frac{-\lambda l}{Rc}}\right)}{\gamma^2\left(1 - \frac{1}{2}\, e^{\frac{-\lambda l}{Rc}}\right)}\left\{1 - \frac{1}{2}\,\frac{\gamma^2\left(1 - \frac{1}{2}\, e^{\frac{-\lambda l}{Rc}}\right)}{1 + \gamma^2\left(1 - \frac{1}{2}\, e^{\frac{-\lambda l}{Rc}}\right)}\left[1 - \left(\frac{r_1}{r_2}\right)^2\right]\right\}$$

when

$$\frac{\gamma^2\left(1 - \frac{1}{2}\, e^{\frac{-\lambda l}{Rc}}\right)\left[1 - \left(\frac{r_1}{r_2}\right)^2\right]}{1 + \gamma^2\left(1 - \frac{1}{2}\, e^{\frac{-\lambda l}{Rc}}\right)}$$

is small compared with unity. Then the constant of integration is given quite accurately by the very simple expression

$$C \approx 1 - \frac{1}{2}\left[1 - \left(\frac{r_1}{r_2}\right)^2\right] \tag{121}$$

which is remarkable for the fact that it depends only upon the ratio of inner to outer blade radii. The downstream velocity distribution is consequently

$$\frac{w_2 - w_1}{w_o} = \frac{\frac{\gamma}{2}\left(\gamma - \frac{\omega r_2}{w_o}\right)\left[1 + \left(\frac{r_1}{r_2}\right)^2 - 2\left(\frac{r}{r_2}\right)^2\right]}{1 + \gamma^2\left(1 - \frac{1}{2}\, e^{\frac{-\lambda l}{Rc}}\right)\left(\frac{r}{r_2}\right)^2} \tag{122}$$

and is shown in figure 16 for a range of values of $\frac{\lambda}{R}\frac{l}{c}$. It is to be noted that for low values of $\frac{l/c}{R}$ the distortion of axial velocity is notably reduced over that for large values of $\frac{l/c}{R}$. The value of $\frac{l/c}{R}$ may be changed through modification of either the blade aspect ratio R or the blade spacing $l/c > 1$. With this result, it is possible to compute the performance of the turbomachine, for, according to equation (114), the axial velocity at the trailing edge is

$$\frac{w_T}{w_o} = 1 + \frac{\frac{\gamma}{2}\left(\gamma - \frac{\omega r_2}{w_o}\right)\left[1 + \left(\frac{r_1}{r_2}\right)^2 - 2\left(\frac{r}{r_2}\right)^2\right]}{\left(1 - \frac{1}{2}\, e^{\frac{-\lambda l}{Rc}}\right)^{-1} + \left(\frac{r}{r_2}\right)^2}$$

Consequently, for the prescribed trailing-edge angles and equation (113),

$$\frac{v_T}{w_o} = \frac{\omega r}{w_o} + \gamma \left\{ 1 + \frac{\frac{\gamma}{2}\left(\gamma - \frac{\omega r_2}{w_o}\right)\left[1 + \left(\frac{r}{r_o}\right)^2 - 2\left(\frac{r}{r_2}\right)^2\right]}{\left(1 - \frac{\gamma}{2} e^{\frac{-\lambda l}{Rc}}\right)^{-1} + \left(\frac{r}{r_2}\right)^2} \right\} \frac{r}{r_2}$$

The distribution of total head coefficient may then be written

$$\frac{\omega r v_T}{\frac{1}{2}(\omega r_2)^2} = 2\left(\frac{r}{r_2}\right)^2 \left(1 + \gamma \frac{w_o}{\omega r_2} \left\{ 1 + \frac{\frac{\gamma}{2}\left(\gamma - \frac{\omega r_2}{w_o}\right)\left[1 + \left(\frac{r_1}{r_2}\right)^2 - 2\left(\frac{r}{r_2}\right)^2\right]}{\left(1 - \frac{1}{2} e^{\frac{-\lambda l}{Rc}}\right)^{-1} + \left(\frac{r}{r_2}\right)^2} \right\} \right) \tag{123}$$

where the quantity $w_o/\omega r_2$ is usually known as the flow coefficient. Clearly the value and sign of $w_o/\omega r_2$ governs whether the local operation (for a given value of r/r_2) corresponds to a turbine or a compressor; that is, whether the head coefficient is negative or positive. Of particular interest to the present investigation is the variation in the distribution of head coefficient caused by the three-dimensional flow process. This effect is found by comparing the head-coefficient distribution found in this way with that obtained under the equilibrium theory; that is, when $l \longrightarrow \infty$. This difference can be written as

$$\Delta \frac{\omega r v_T}{\frac{1}{2}(\omega r_2)^2} = \gamma^2 \left(\frac{r}{r_2}\right)^2 \frac{w_o}{\omega r_2}\left(\gamma - \frac{\omega r_2}{w_o}\right)\left[1 + \left(\frac{r_1}{r_2}\right)^2 - 2\left(\frac{r}{r_2}\right)^2\right] \left[\frac{1}{1 + \left(\frac{r}{r_2}\right)^2} - \frac{1}{\left(1 - \frac{1}{2} e^{\frac{-\lambda l}{Rc}}\right)^{-1} + \left(\frac{r}{r_2}\right)^2}\right]$$

$$= \frac{\left[1 + \left(\frac{r_1}{r_2}\right)^2 - 2\left(\frac{r}{r_2}\right)^2\right] \frac{\gamma^2}{2} e^{\frac{-\lambda l}{Rc}} \left(\gamma \frac{w_o}{\omega r_2} - 1\right)\left(\frac{r}{r_2}\right)^2}{\left[1 + \left(\frac{r}{r_2}\right)^2\right]\left[1 + \left(1 - \frac{1}{2} e^{\frac{-\lambda l}{Rc}}\right)\left(\frac{r}{r_2}\right)^2\right]} \tag{124}$$

The radial distribution of this variation is shown in figure 17 for an appropriate range of values of $\lambda l/Rc$. The difference decreases, of course, as $l/Rc \longrightarrow \infty$ because then the simple equilibrium solution is approached. Also of interest is the fact that as $l/Rc \longrightarrow \infty$ the radial variation of the enthalpy distribution decreases. These results are peculiar to the distribution of trailing-edge angle which was chosen for the problem.

The exponential approximation may also be employed to discuss the operation of turbomachines at flow coefficients other than those for which it was designed; this is usually referred to as "off-design" operation. For this problem it is assumed that the detailed flow is known for the design operation and the variation of the flow from this known distribution is calculated for small changes of the flow coefficient.

Let $\delta(r)$ indicate the difference between a solution of equation (118) for the off-design operation and one for the design condition; that is,

$$\delta(r) = \frac{w_2 - w_1}{w_o} - \frac{w_2^* - w_1^*}{w_o^*} \tag{125}$$

where the starred quantities are those corresponding to the design conditions. Then, according to equation (118),

$$\left[1 + \left(1 - \frac{1}{2} e^{\frac{-\lambda l}{Rc}}\right) \tan^2\phi\right]\frac{d}{dr}\left[\delta(r)\right] + \left[\frac{\left(1 - \frac{1}{2} e^{\frac{-\lambda l}{Rc}}\right)}{2r^2} \frac{d}{dr} r^2\tan^2\phi\right]\delta(r) =$$

$$- \frac{\tan \phi}{r} \frac{d}{dr} r\left[\left(\frac{w_1}{w_o} - \frac{w_1^*}{w_o^*}\right) \tan \phi + \frac{\omega r}{w_o} - \frac{\omega^* r}{w_o^*}\right] + p(r) \tag{126}$$

where

$$p(r) \equiv \left[\frac{v_1 - \omega r}{w_1} \frac{d}{dr}\left(\frac{rv}{w_2}\right) - \frac{v_1^* - \omega r^*}{w_1^*} \frac{d}{dr}\left(\frac{rv_1^*}{w_o^*}\right)\right]$$

This equation may be integrated in any particular case when the complete upstream conditions and flow coefficients are given for both the design and off-design conditions. The boundary condition is simply

$$\int_{r_1}^{r_2} \delta(r) r \, dr = 0 \tag{127}$$

When the term on the right side of equation (126) vanishes, the solution becomes $\delta(r) = 0$ which is logical inasmuch as the terms on the right side represent deviations from the design condition. Furthermore the term $p(r) - \frac{\tan \phi}{r} \frac{d}{dr} r\left[\left(\frac{w_1}{w_o} - \frac{w_1{}^*}{w_o{}^*}\right) \tan \phi \frac{\tan \phi}{r}\right]$ represents the influence of the variation and nonuniformity of the initial flow far upstream of the blade row. When the upstream velocity distribution is unchanged and the tangential velocity vanishes, this term itself vanishes. On the other hand the remaining term is

$$\frac{\tan \phi}{r} \frac{d}{dr}\left(\frac{\omega r}{w_o} - \frac{\omega^* r}{w_o{}^*}\right) = \frac{2 \tan \phi}{r}\left(\frac{\omega r}{w_o} - \frac{\omega^* r}{w_o{}^*}\right) \tag{128}$$

which represents the effect of the variation of local flow coefficient. This term exhibits clearly the possibility of similar operating conditions; any change in mean axial velocity (flow quantity) and blade angular velocity which leaves their ratio unchanged produces no variation in the distribution of axial velocity. As before, the trailing-edge angle is known; the tangential velocity (and therefore the total-head coefficient) leaving the blade row under the new operating conditions may be found directly once the new distribution of axial velocity is known.

To illustrate this analysis it is convenient to employ the same example used in the direct problem. Consider a single moving blade row with trailing-edge angles such that $\tan \phi = \gamma \frac{r}{r_2}$ with design axial and blade angular velocities $w_o{}^*$ and ω^*, respectively. Let the tangential velocity vanish far upstream of the blade row and the axial

velocity be uniform at the same point. Then $p(r) \equiv 0$ and equation (126) becomes

$$\frac{d}{d\,\frac{r}{r_2}}\left\{\left[1 + \left(1 - \frac{1}{2}\,e^{\frac{-\lambda l}{Rc}}\right)\gamma^2\left(\frac{r}{r_2}\right)^2\right]\delta(r)\right\} = -2\gamma\left(\frac{r}{r_2}\right)\left(\frac{\omega r_2}{w_o} - \frac{\omega^* r_2}{w_o^*}\right) \tag{129}$$

Integrating as before, the solution for $\delta(r)$ is simply

$$\delta(r) = \frac{\gamma}{2}\left(\frac{\omega r_2}{w_o} - \frac{\omega^* r_2}{w_o^*}\right)\left[\frac{1 + \left(\frac{r_1}{r_2}\right)^2 - 2\left(\frac{r}{r_2}\right)^2}{\gamma^2\left(1 - \frac{1}{2}\,e^{\frac{-\lambda l}{Rc}}\right)\left(\frac{r}{r_2}\right)^2 + 1}\right] \tag{130}$$

Clearly the distortion of the axial velocity profile caused by off-design operation decreases as $\lambda l/Rc$ increases, for example, as the aspect ratio increases and other geometry remains fixed. The change of axial velocity distribution for a unit change of $\omega r_2/w_o$ is shown for the above example in figure 18 using values of $\gamma^2\left(1 - \frac{1}{2}\,e^{\frac{-\lambda l}{Rc}}\right) = 0.5$, 1.0, and 2.0. It is seen that, for the blade shape used, the flow distortion may be considerably less when, for example, the blade aspect ratio is low than when it is high, the value of l/c remaining fixed.

LINEARIZED PROBLEM FOR CONICAL TURBOMACHINE

The flow through an axial turbomachine is not the only physical situation which may be treated through linearization of the right side of equation (20). This may be done, in principle, for any axially symmetric problem where the general behavior of the stream surface may be given in advance. When, for example, the walls of the turbomachine consist of two coaxial cones with a common vertex (fig. 19), equation (20) describes the situation adequately and the problem may be

linearized by assuming, on the right side of equation (20), that the stream surface consists of conical surfaces.

To discuss the flow in detail, it is convenient to transform equation (20) into spherical polar coordinates R, θ, and Φ (see fig. 19) with corresponding velocity components U, v, and W and vorticity components Ξ, η, and Z. The components θ, v, and η are given the same symbols as for the cylindrical problem since they are, in fact, the same quantities. The coordinate transformation is simply

$$\left.\begin{aligned} r &= R \sin \Phi = R\sqrt{1 - \mu^2} \\ Z &= R \cos \Phi = R\mu \end{aligned}\right\} \tag{131}$$

where $\mu \equiv \cos \phi$. Then equation (17) becomes

$$\frac{\partial^2\psi}{\partial R^2} + \frac{1 - \mu^2}{R^2}\frac{\partial^2\psi}{\partial\mu^2} = R\sqrt{1 - \mu^2}\left[\left(\omega R\sqrt{1 - \mu^2} - v\right)\frac{\partial}{\partial\psi}\left(vR\sqrt{1 - \mu^2}\right) + \frac{F_\psi}{U_s} - \frac{\partial H_o}{\partial\psi} - \frac{\partial}{\partial\psi}\left(\omega R v_o\sqrt{1 - \mu^2}\right)\right] \tag{132}$$

Here the stream function has the properties $U = \dfrac{1}{R \sin \phi}\dfrac{\partial\psi}{R\partial\phi}$ and $W = \dfrac{-1}{R \sin \Phi}\dfrac{\partial\psi}{\partial R}$. The right side of this equation is linearized by considering $U_o(R)$, the basic flow corresponding to a source or sink at the origin $R = 0$, to be only slightly perturbed by the action of the blade row. Then on the right side of equation (132), choose

$$d\psi \approx U_o(R)R \sin \Phi \, d\Phi = -U_o(R)R \, d\mu$$

and consequently the linearized expression becomes

$$\frac{\partial^2\psi}{\partial R^2} + \frac{1 - \mu^2}{R^2}\frac{\partial^2\psi}{\partial\mu^2} = \sqrt{1 - \mu^2}\left[\left(\frac{v - \omega R\sqrt{1 - \mu^2}}{U_o(R)}\right)\frac{\partial}{\partial\mu}\left(vR\sqrt{1 - \mu^2}\right) + \frac{RF_\mu}{U_o(R)} + \frac{\partial H_o}{\partial\mu} + \frac{\partial}{\partial\mu}\left(\omega R v_o\sqrt{1 - \mu^2}\right)\right] \tag{133}$$

If the radial velocity $U_o(R)$ has a value of $U_o(R)$ at a reference radius R_o, it follows that, at any other radius,

$$U_o(R) = U_o(R_o)\left(\frac{R_o}{R}\right)^2$$

or

$$\psi_o = U_o(R_o)R_o^2(\mu_1 - \mu) \tag{134}$$

The boundary conditions to be satisfied by the stream function ψ are those of vanishing tangential derivative at the inner and outer cone angles, say, μ_1 and μ_2, vanishing disturbances in the μ-direction both for upstream and downstream, and certain conditions at the blade depending upon whether the blade shape, blade loading, or angular momentum distribution is prescribed. These conditions may be given analytically as they were for the axial turbomachine: At the inner and outer boundaries,

$$\left.\begin{aligned} \psi(R,\mu_1) &= 0 \\ \psi(R,\mu_2) &= U_o(R_o)R_o^2(\mu_1 - \mu_2) \end{aligned}\right\} \tag{135}$$

As $R \longrightarrow 0$ and $R \longrightarrow \infty$ the flow becomes conical, therefore

$$\lim_{R \longrightarrow 0}\left(\frac{\partial\psi}{\partial R}\Big/\frac{\partial\psi}{R\partial\Phi}\right) = \lim_{R \longrightarrow \infty}\left(\frac{\partial\psi}{\partial R}\Big/\frac{\partial\psi}{R\partial\Phi}\right) = 0 \tag{136}$$

The values of H_o and v_o are assumed to be known at some station upstream of the blade row, and the angular velocity of the blade is given. Concerning the conditions prescribed at the blade row, only the case where the angular momentum is prescribed will be treated. The extension to the other cases may be effected in a manner analogous to that used for the axial turbomachine.

The mathematical problem to be considered is therefore the partial differential equation

$$\frac{\partial^2\psi}{\partial R^2} + \frac{1 - \mu^2}{R^2}\frac{\partial^2\psi}{\partial\mu^2} = f(R,\mu) + \left[\frac{\partial H_o}{\partial\mu} + \frac{\partial}{\partial\mu}\left(\omega R v_o\sqrt{1 - \mu^2}\right)\right]\sqrt{1 - \mu^2}$$

where

$$f(R,\mu) = \sqrt{1 - \mu^2}\left[\frac{v - \omega R\sqrt{1 - \mu^2}}{U_o(R)}\frac{\partial}{\partial\mu}\left(vR\sqrt{1 - \mu^2}\right) + \frac{RF_\mu}{U_o(R)}\right] \tag{137}$$

$$\psi\left(R,\mu_1\right) = 0$$

$$\psi\left(R,\mu_2\right) = U_o\left(R_o\right)R_o^{\,2}\left(\mu_1 - \mu_2\right)$$

$$\lim_{R \longrightarrow 0}\left(\frac{\partial\psi}{\partial R}\Big/\frac{\partial\psi}{R\partial\Phi}\right) = \lim_{R \longrightarrow \infty}\left(\frac{\partial\psi}{\partial R}\Big/\frac{\partial\psi}{R\partial\Phi}\right)$$

$$= 0$$

The functions $v(R,\mu)$, $H_o(\mu)$, and $v_o(\mu)$ are given. It is convenient to choose the stream function ψ to be the sum of two partial stream functions

$$\psi = \psi^{(1)} + \psi^{(2)} \tag{138}$$

where $\psi^{(1)}$ corresponds to the flow which would exist for the same initial and boundary conditions, but with the blade removed. The function $\psi^{(2)}$ is then the perturbation stream function corresponding to the effect of the blade row on the U and W velocity components.

Clearly $\frac{\partial\psi^{(1)}}{\partial R} = 0$ so that $\psi^{(1)}$ is found by a simple quadrature, for, according to relations (137),

$$\frac{\sqrt{1 - \mu^2}}{R^2}\frac{\partial^2\psi^{(1)}}{\partial\mu^2} = \frac{\partial H_o}{\partial\mu} + \frac{\partial}{\partial\mu}\left(\omega R v_o\sqrt{1 - \mu^2}\right) \tag{139}$$

which with the conditions

$$\psi^{(1)}(R,\mu_1) = 0$$

$$\psi^{(1)}(R,\mu_2) = U_o(R_o)R_o^2(\mu_1 - \mu_2)$$

determines $\psi^{(1)}(R,\mu)$ completely. Then the stream function $\psi^{(2)}$ satisfies the homogeneous problem

$$\frac{\partial^2\psi^{(2)}}{\partial R^2} + \frac{1 - \mu^2}{R^2}\frac{\partial^2\psi^{(2)}}{\partial\mu^2} = f(R,\mu) \tag{140}$$

$$\psi^{(2)}(R,\mu_1) = \psi^{(2)}(R,\mu_2)$$

$$= \psi^{(2)}(0,\mu)$$

$$= \psi^{(2)}(\infty,\mu)$$

$$= 0$$

Solutions of the corresponding homogeneous equation may be written in the forms $R^{n_i+1}H_{n_i}(\mu)$ and $R^{-n_i}H_{n_i}(\mu)$ where $H_{n_i}(\mu)$ are linear combinations of associated Legendre functions (reference 28) of order 1, degree n_i, and both first and second kinds.

$$H_{n_i}(\mu) = P_{n_i}^{(1)}(\mu)Q_{n_i}^{(1)}(\mu_1) - P_{n_i}^{(1)}(\mu_1)Q_{n_i}^{(1)}(\mu) \tag{141}$$

This clearly vanishes identically when $\mu = \mu_1$. The characteristic functions of the problem are thus determined by finding those values of the degree n_i such that

$$H_{n_i}(\mu_2) \equiv P_{n_i}^{(1)}(\mu_2)Q_{n_i}^{(1)}(\mu_1) - P_{n_i}^{(1)}(\mu_1)Q_{n_i}^{(1)}(\mu_2)$$

$$= 0 \tag{142}$$

The resulting infinite set of values n_i are the characteristic numbers which range between $-\infty$ and ∞. However, it is possible to restrict the necessary values of n_i through noting (reference 29) that

$$P_{-n_i-1}^{(1)}(\mu) = P_{n_i}^{(1)}(\mu)$$

$$Q_{-n_i-1}^{(1)} = \frac{\sin\left(n_i + 1\right)\pi}{\sin\left(n_i - 1\right)\pi} Q_{n_i}^{(1)}(\mu) + \frac{\pi \cos n_i\pi}{\sin\left(n_i - 1\right)\pi} P_{n_i}^{(1)}(\mu)$$

and therefore the value of $H_{-n_i-1}(\mu)$ is simply

$$H_{-n_i-1}(\mu) = \frac{\sin\left(n_i + 1\right)\pi}{\sin\left(n_i - 1\right)\pi} H_{n_i}(\mu)$$

Consequently it is not necessary to consider values of n_i for which $n_i < -1$. The corresponding set of characteristic functions $H_{n_i}(\mu)$ is complete and possesses orthogonality properties common to functions satisfying a Sturm-Liouville problem.

A solution to the inhomogeneous partial differential equation (equation 140) from solutions $R^{n_i+1}H_{n_i}(\mu)$ and $R^{-n_i}H_{n_i}(\mu)$ of the homogeneous equation follows: If $I(\alpha,\epsilon)$ is impulse function with properties

$$I(\alpha,\epsilon) = 1 \qquad \alpha - \frac{\epsilon}{2} < R < \alpha + \frac{\epsilon}{2}$$

$$I(\alpha,\epsilon) = 0 \qquad 0 \leq R \leq \alpha - \frac{\epsilon}{2};\ R > \alpha + \frac{\epsilon}{2}$$

the contribution to the solution of the function $f(R,\mu)$ in the range $\alpha - \frac{\epsilon}{2} < R < \alpha + \frac{\epsilon}{2}$ may be found to be

$$\left.\begin{aligned}
&\int_{\mu_1}^{\mu_2} I(\alpha,\epsilon)f(\alpha,\mu) \sum_{1}^{\infty} \frac{H_{n_i}(\beta)H_{n_i}(\mu)}{\nu_{n_i}^{2}\left(2n_i + 1\right)} \sqrt{\frac{1 - \mu^2}{1 - \beta^2}}\, \frac{R^{n_i+1}}{\alpha^{n_i}}\, d\beta\epsilon \qquad R < \alpha \\
&\int_{\mu_1}^{\mu_2} I(\alpha,\epsilon)f(\alpha,\mu) \sum_{1}^{\infty} \frac{H_{n_i}(\beta)H_{n_i}(\mu)}{\nu_{n_i}^{2}\left(2n_i + 1\right)} \sqrt{\frac{1 - \mu^2}{1 - \beta^2}}\, \frac{R^{-n_i}}{\alpha^{-n_i-1}}\, d\beta\epsilon \qquad R > \alpha
\end{aligned}\right\} \quad (143)$$

where the choice of the solutions is determined by the boundary conditions at $R = 0$ and $R = \infty$. The numbers $\nu_{n_i}^2$ are norms of the $H_{n_i}(\mu)$ functions

$$\nu_{n_i}^2 = \int_{\mu_2}^{\mu_1} H_{n_i}^2(\beta)\, d\beta \tag{144}$$

The complete solution to the problem is simply the sum of the solutions of the type (143) for each element of the range where $f(R,\mu) \neq 0$. Consequently if the function $L(R,\mu;\ \alpha,\beta)$ is defined

$$\left.\begin{aligned} L(R,\mu;\ \alpha,\beta) &= \sum_{1}^{\infty} \frac{H_{n_i}(\beta)H_{n_i}(\mu)}{\nu_{n_i}^2(2n_i + 1)} \sqrt{\frac{1 - \mu^2}{1 - \beta^2}}\, \frac{R^{n_i+1}}{\alpha^{n_i}} \qquad R < \alpha \\ L(R,\mu;\ \alpha,\beta) &= \sum_{1}^{\infty} \frac{H_{n_i}(\beta)H_{n_i}(\mu)}{\nu_{n_i}^2(2n_i + 1)} \sqrt{\frac{1 - \mu^2}{1 - \beta^2}}\, \frac{R^{-n_i}}{\alpha^{-n_i-1}} \qquad R > \alpha \end{aligned}\right\} \tag{145}$$

The complete solution is

$$\psi^{(2)}(R,\mu) = \int_0^{\infty} \int_{\mu_1}^{\mu_2} f(\alpha,\beta)L(R,\mu;\ \alpha,\beta)\, d\alpha\, d\beta \tag{146}$$

so long as the function $f(\alpha,\beta)$ is integrable.

Although this procedure is formally quite simple for any distribution of angular momentum (or for any other manner of prescribing information at the blade row) the details of the calculations involving the Legendre functions are somewhat cumbersome. The difficulties lie principally in the lack of extensive tabulations. Therefore it is appropriate, and usually sufficiently accurate, to use an asymptotic expression for the functions $H_{n_i}(\mu)$. This representation is

$$H_{n_i}(\mu) \approx \frac{n_i \sin\left(n_i + \frac{1}{2}\right)\left(\Phi - \Phi_1\right)}{\sqrt{\sin \Phi \sin \Phi_1}} \tag{147}$$

where Φ_1 is the semivertex angle of the root cone. Consequently the values of n_i are determined so that $H_{n_i}(\mu_2)$ vanishes, or if Φ_2 is the semivertex angle of the tip cone

$$\sin\left(n_i + \frac{1}{2}\right)\left(\Phi_2 - \Phi_1\right) = 0$$

or clearly

$$n_i = \frac{i\pi}{\Phi_2 - \Phi_1} - \frac{1}{2} \tag{148}$$

Therefore, except for impractical included angles $\Phi_2 - \Phi_1$, only positive values of n_i will enter into the problem. The norms of the functions are easily calculated

$$\nu_{n_i}{}^2 = \int_{\Phi_1}^{\Phi_2} \frac{n_i{}^2 \sin^2\left(n_i + \frac{1}{2}\right)\left(\Phi - \Phi_1\right)}{\left(\sin \Phi \sin \Phi_1\right)^2} d(\cos \Phi)$$

$$= \frac{-n_1{}^2}{\left(2n_i + 1\right) \sin \Phi_1} \tag{149}$$

Then, in the asymptotic representation, the Green's function becomes

$$\left.\begin{aligned}
L(R,\mu;\ \alpha,\beta) &= -\sum_1^\infty \frac{\sin\left(n_i + \frac{1}{2}\right)\left(\Phi - \Phi_1\right) \sin\left(n_i + \frac{1}{2}\right)\left(\bar{\Phi} - \bar{\Phi}_1\right)}{\sqrt{\sin \Phi \sin \bar{\Phi}}} \frac{R^{n_i+1}}{\alpha^{n_i}} \frac{\sin \Phi}{\sin \bar{\Phi}} \qquad R < \alpha \\
L(R,\mu;\ \alpha,\beta) &= -\sum_1^\infty \frac{\sin\left(n_i + \frac{1}{2}\right)\left(\Phi - \Phi_1\right) \sin\left(n_i + \frac{1}{2}\right)\left(\bar{\Phi} - \bar{\Phi}_1\right)}{\sqrt{\sin \Phi \sin \bar{\Phi}}} \frac{R^{-n_i}}{\alpha^{-n_i-1}} \frac{\sin \Phi}{\sin \bar{\Phi}} \qquad R > \alpha
\end{aligned}\right\} \tag{150}$$

where $\bar{\Phi}$ is the variable of integration corresponding to Φ; that is, $\cos \bar{\Phi} \equiv \beta$. By means of these results, the perturbation stream function $\psi^{(2)}(R,\mu)$ may be evaluated directly from equation (146). The integrations offer no essential difficulty.

EXAMPLE FOR CONICAL TURBOMACHINE

As an example of the analysis of the conical turbomachine problem, consider the flow through such a configuration having a root semivertex angle of $\Phi_1 = \pi/6$ and a tip semivertex angle of $\Phi_2 = \pi/4$. Assume a single blade row containing an infinite number of blades of chord c and angular velocity ω, and located with its center at $R = R_o$. The blade aspect ratio $R_o\left(\Phi_2 - \Phi_1\right)/c$ is equal to 2.0. Let $U_o\left(R_o\right)$ be the mean through-flow velocity on the spherical surface $R = R_o$ and assume that the flow is uniform and undisturbed at $R \longrightarrow \infty$.

The stream function $\psi^{(1)}$ corresponding to the mean flow is simply

$$\psi^{(1)}(\Phi) = U_o\left(R_o\right)R_o\left(\cos \Phi_1 - \cos \Phi\right) \tag{151}$$

The stream function $\psi^{(2)}(R,\mu)$ satisfies equation (140) and to solve this it is necessary to prescribe conditions at the blade row so that the function $f(R,\mu)$ may be evaluated. For the present example the distribution of the angular momentum will be prescribed and for convenience will be given as a distribution similar to that used for the examples of the axial turbomachine calculation. The angular momentum is

$$\left.\begin{aligned}
vR \sin \Phi &= 0 && R \geqq R_o + \frac{c}{2} \\
vR \sin \Phi &= kU_o c \sin^2\Phi\left(\frac{R_o}{c} + \frac{1}{2} - \frac{R}{c}\right) && R_o + \frac{c}{2} \geqq R \geqq R_o \\
vR \sin \Phi &= k \frac{U_o c}{2} \sin^2\Phi\left[1 + 2 \frac{\left(R_o - R\right)}{c} - 2\left(\frac{R_o - R}{c}\right)^2\right] && R_o - \frac{c}{2} \leqq R \leqq R_o \\
vR \sin \Phi &= \frac{3}{4} kU_o c \sin^2\Phi && R_o - \frac{c}{2} \geqq R > 0
\end{aligned}\right\} \tag{152}$$

It will be assumed further that the blade leading edge is proportioned so that $F_\Phi = 0$. The angular momentum is prescribed so that it is continuous and its derivative $\frac{\partial}{\partial R}(vR \sin \Phi)$, proportional to the tangential force exerted by the blade row, is continuous and vanishes at the trailing edge $R = R_o - \frac{c}{2}$. With these values of the angular momentum and the definition of $f(R,\mu)$, it is easily shown that

$$f(R,\mu) = -U_o g(R)\mu\left(1 - \mu^2\right)$$

where the function $g(R)$ is

$$\left.\begin{aligned}
&g(R) = 0 && R \geqq R_o + \frac{c}{2} \\
&g(R) = \left(\frac{R_o}{c} + \frac{1}{2} - \frac{R}{c}\right)k\left[\frac{k\,\frac{c}{R}\left(\frac{R_o}{c} + \frac{1}{2} - \frac{R}{c}\right) - \frac{\omega R}{U_o}}{\frac{U_o(R)}{R}}\right] && R_o + \frac{c}{2} \geqq R \geqq R_o \\
&g(R) = \left[1 + 2\left(\frac{R_o - R}{c}\right) - 2\left(\frac{R_o - R}{c}\right)^2\right]k\left\{\frac{\frac{k}{2}\,\frac{c}{R}\left[1 + 2\left(\frac{R_o - R}{c}\right) - 2\left(\frac{R_o - R}{c}\right)^2\right] - \frac{\omega R}{U_o}}{\frac{U_o(R)}{R}}\right\} && R_o - \frac{c}{2} \leqq R \leqq R_o \\
&g(R) = \frac{3}{4}k\left[\frac{\frac{3}{4}k\,\frac{c}{R} - \frac{\omega R}{U_o}}{\frac{U_o(R)}{R}}\right] && R_o - \frac{c}{2} \geqq R > 0
\end{aligned}\right\} \quad (154)$$

Therefore, inserting the result of equations (153) and (150) into the general solution, equation (146), it follows that

$$\psi^{(2)}(R,\mu) = -U_o(R_o)\sum_{1}^{\infty}\frac{H_{n_j}(\mu)}{\nu_{n_j}^{\,2}(2n_j + 1)}\sqrt{1 - \mu^2}\begin{bmatrix}\left(\frac{R}{R_o}\right)^{n_j+1}\\ \left(\frac{R}{R_o}\right)^{-n_j}\end{bmatrix}\int_0^\infty g(\alpha)\begin{bmatrix}\left(\frac{\alpha}{R_o}\right)^{-n_j}\\ \left(\frac{\alpha}{R_o}\right)^{n_j+1}\end{bmatrix}d\alpha \times$$

$$\int_{\mu_1}^{\mu_2} H_{n_j}(\beta)\beta\sqrt{1 - \beta^2}\,d\beta \qquad (155)$$

where the appropriate pairs of exponents for $\frac{R}{R_o}$ and $\frac{\alpha}{R_o}$ are employed. For practical calculation, it is important to note that the integral

$$\int_0^\infty g(\alpha)\begin{bmatrix}\left(\frac{\alpha}{R_o}\right)^{-n_j}\\ \left(\frac{\alpha}{R_o}\right)^{n_j+1}\end{bmatrix} d\alpha$$

must be evaluated as

$$\int_0^\infty g(\alpha)\begin{bmatrix}\left(\frac{\alpha}{R_o}\right)^{-n_j}\\ \left(\frac{\alpha}{R_o}\right)^{n_j+1}\end{bmatrix} d\alpha \equiv \int_0^R g(\alpha)\left(\frac{\alpha}{R_o}\right)^{n_j+1} d\alpha + \int_R^\infty g(\alpha)\left(\frac{\alpha}{R_o}\right)^{-n_j} d\alpha \quad (156)$$

and the appropriate factors $\left(\frac{R}{R_o}\right)^{-n_j}$ and $\left(\frac{R}{R_o}\right)^{n_j+1}$, respectively, associated with each portion of the integral. This integral is therefore a function of R, and some care must be exercised in differentiating the stream function with respect to R before the integration is carried out.

For evaluation of the present example, the asymptotic values of the functions $H_j(\mu)$ and the corresponding characteristic values will be used as an adequate approximation. Then according to equations (147) and (148), the perturbation stream function $\psi^{(2)}(R,\mu)$ may be written approximately as

$$\psi^{(2)}(R,\mu) \approx -\sum_{1}^{\infty} \sqrt{\sin \phi}\, \sin j\pi\left(\frac{\Phi - \Phi_1}{\Phi_2 - \Phi_1}\right) \begin{bmatrix} \left(\frac{R}{R_o}\right)^{n_j+1} \\ \left(\frac{R}{R_o}\right)^{-n_j} \end{bmatrix} \int_0^{\infty} g(\alpha) \begin{bmatrix} \left(\frac{\alpha}{R_o}\right)^{-n_j} \\ \left(\frac{\alpha}{R_o}\right)^{n_j+1} \end{bmatrix} d\alpha \times$$

$$\int_{\phi_2}^{\phi_1} \sin j\pi\left(\frac{\beta - \Phi_1}{\Phi_2 - \Phi_1}\right) \sin^{3/2}\beta \cos \beta\, d\beta \tag{157}$$

For actual calculation the perturbation through-flow velocity, $U^{(2)} = \frac{1}{R \sin \Phi} \frac{\partial \psi^{(2)}}{R\, \partial \Phi}$ is of interest and may be evaluated directly as

$$U^{(2)}(R,\Phi) = \sum_{1}^{\infty} \sqrt{\frac{\frac{\cos^2\Phi}{4} + \left(\frac{n_j\pi}{\Phi_2 - \Phi_1}\right)^2 \sin^2\Phi}{\sin^{3/2}\Phi}}\, \sin\left(j\pi \frac{\Phi - \Phi_1}{\Phi_2 - \Phi_1} + \gamma_j\right) \begin{bmatrix} \left(\frac{R}{R_o}\right)^{n_j-1} \\ \left(\frac{R}{R_o}\right)^{-n_j-2} \end{bmatrix} S(R,j) \tag{158}$$

where

$$S(R,j) \equiv \int_0^{\infty} \frac{g(\alpha)}{R_o} \begin{bmatrix} \left(\frac{\alpha}{R_o}\right)^{-n_j} \\ \left(\frac{\alpha}{R_o}\right)^{n_j+1} \end{bmatrix} \frac{d\alpha}{R_o} \int_{\Phi_1}^{\Phi_2} \sin j\pi\left(\frac{\beta - \Phi_1}{\Phi_2 - \Phi_1}\right) \sin^{3/2}\beta \cos \beta\, d\beta \tag{159}$$

and

$$\tan \gamma_j = \frac{2j\pi}{\Phi_2 - \Phi_1} \tan \Phi_1 \tag{160}$$

The distribution of the perturbation through-flow velocity can now be calculated for the $g(R)$ given by equations (154) by a straightforward combination of analytical and numerical methods.

Some features may be noted, however, without carrying out the actual calculations. The variations of the through-flow velocity is governed, except very close to the blade row, by the lowest power of R/R_o occurring in the expansion given by equation (158), that is, $(R/R_o)^{n_1-1}$. The rapid decay of the through-flow velocity perturbation follows directly from the fact that the included cone angle $\Phi_2 - \Phi_1$ is only $\pi/12$ and consequently the asymptotic values of the n_j are $12j - \frac{1}{2}$. Therefore, downstream of the blade row the perturbations decay at least as fast as $(R/R_o)^{10.5}$. This large value of the first characteristic number n_1 also determines the disappearance of the velocity perturbation downstream of the blade row. For since the mean through-flow velocity increases as $(R/R_o)^{-2}$, the ratio of the perturbation through-flow velocity then behaves as $\frac{U^{(2)}(R)}{U^{(1)}(R)} \sim (R/R_o)^{12.5}$ downstream of the blade row.

SUMMARY OF RESULTS

The flow of an incompressible inviscid fluid through a turbomachine with blade rows consisting of an infinite number of similar infinitely thin blades has been investigated theoretically in order to examine and describe the three-dimensional flow phenomena and to illustrate the methods of calculation developed. The following results have been obtained from the general analysis and from examples when the inner and outer boundaries of the turbomachine and the flow conditions far upstream of the blade row are prescribed.

(1) The velocity components in a plane through the axis of symmetry are determined, through a nonlinear differential equation, by the

angular momentum of the fluid about the axis and the blade force at the leading edge normal to the stream surfaces.

(2) The differential equation for the velocity components may be linearized with good accuracy by assuming an approximate shape for the stream surfaces in the nonlinear terms.

(3) The problem for the axial turbomachine may be linearized, when the distortion of the through-flow velocity is small, by assuming the stream surfaces to be concentric cylinders. The first-order linearized flow through the axial turbomachine may be solved when any one of the following combinations of conditions at the blades is prescribed.

(a) The blade loading, that is, the tangential force component and the radial force at the leading edge

(b) The distribution of angular momentum and radial blade force at the leading edge

(c) The distribution of total head and radial blade force at the leading edge

(d) The distribution of blade shape

(4) For any specific problem of axial turbomachines, the linearized three-dimensional flow can be calculated either analytically or by a simple punched-card method.

(5) Calculations of single rotating blade rows with aspect ratios of 2 and 2/3 and with a specific distribution of angular momentum indicated that for blades of aspect ratio in excess of 2.0, a three-dimensional flow takes place both upstream of the leading edge and downstream of the trailing edge sufficiently to have noticeable influence on the blade angles. For blades of aspect ratio less than 1.0, essentially all of the three-dimensional flow takes place within the blade row.

(6) When the radial variation of the through-flow velocity is large, the simple linearization is inadequate. A more accurate linearization allows either analytic solution or a numerical solution employing the same punched-card calculation described in the first-order solution.

(7) An exponential approximation for the axial and radial velocity components was developed whose simplicity allows investigation of complex axial turbomachine configurations. Its use is illustrated by solutions for the multistage turbomachine and the solution for the single blade row with prescribed shape.

(8) The interference between neighboring blade rows of a multistage turbomachine may be neglected when the ratio of blade length to distance between blade-row centers is less than 1.0. However, when this ratio exceeds 3.0, the interference may become an important influence on the flow pattern and a significant influence upon blade shape.

(9) The change of axial velocity distribution caused by off-design operation was calculated for a blade row which imparted essentially "solid body" rotation at design conditions. The results indicated that the distortion of the axial velocity profile was significantly less for low than for high blade aspect ratios.

(10) The linearized flow through a conical turbomachine may be solved completely if the original expression is linearized by assuming in the nonlinear terms that the approximate stream surfaces are coaxial cones with common vertex.

California Institute of Technology
Pasadena, Calif., May 15, 1950

REFERENCES

1. Betz, A.: Diagramme zur Berechnung von Flügelreihen. Ing.-Archiv., Bd. II, Heft 3, Sept. 1931, pp. 359-371. (Also available as NACA TM 1022, 1942.)

2. Weinig, F.: Die Strömung um die Schaufeln von Turbomaschinen. J. A. Barth (Leipzig), 1935.

3. Keller, Curt: Axialgebläse vom Standpunkt der Tragflügeltheorie. Leemann and Co. (Zurich), 1936.

4. Kawada, Sandi: A Contribution of the Theory of Latticed Wing. Vol. I. Proc. Third Int. Cong. Appl. Mech. (Aug. 1930, Stockholm), AB. Sveriges Litografiska Tryckerier (Stockholm), 1930, pp. 393-402.

5. Pistolesi, E.: On the Calculation of Flow past an Infinite Screen of Thin Airfoils. Publicazioni della R. Scuola d'Ingegineria di Peisa, Sept. 1937.

6. Garrick, I. E.: On the Plane Potential Flow past a Lattice of Arbitrary Airfoils. NACA Rep. 788, 1944.

7. Lighthill, M. J.: A Mathematical Method of Cascade Design. R. and M. No. 2104, British A.R.C., 1945.

8. Christiani, K.: Experimentelle Untersuchung eines Tragflügelprofils bei Gitteranordung. Luftfahrtforschung, Bd. 2, Heft 4, Aug. 27, 1928, pp. 91-110.

9. Shimoyama, Yoshinori: Experiments on Rows of Airfoils for Retarded Flow. Trans. Soc. Mech. Eng. (Japan), vol. 3, no. 13, Nov. 1937, pp. 334-344. (Also available as NACA TM 1190, 1947.)

10. Bogdonoff, Seymour M., and Bogdonoff, Harriet E.: Blade Design Data for Axial-Flow Fans and Compressors. NACA ACR L5F07a, 1945.

11. Traupel, Walter: Neue Allgemeine Theorie der Mehrstufigen Axialen Turbomaschine. Leemann and Co. (Zurich), 1942.

12. Eckert and Korbacher: The Flow through Axial Turbine Stages of Large Radial Blade Length. NACA TM 1118, 1947.

13. Sinnette, John T., Jr.: Increasing the Range of Axial Flow Compressors by Use of Adjustable Stator Blades. Jour. Aero. Sci., vol. 14, no. 5, May 1947, pp. 269-282.

14. Betz, A.: Schraubenpropeller mit geringstem Energieverlust. Nach. d. Gesell. d. Wiss. zu Göttingen, Math.-Phys. Klasse, 1919, pp. 193-217.

15. Ruden, P.: Investigation of Single Stage Axial Fans. NACA TM 1062, 1944.

16. Meyer, Richard: Beitrag zur Theorie feststehender Schaufelgitter. Mitt. Inst. Aerodynamik (E. T. H., Zurich), Nr. 11, 1946.

17. Reissner, H.: Blade Systems of Circular Arrangement in Steady Compressible Flow. Studies and Essays Presented to R. Courant on His Sixtieth Birthday, Interscience Pub., Inc. (N. Y.), 1948.

18. Marble, Frank E.: The Flow of a Perfect Fluid through an Axial Turbomachine with Prescribed Blade Loading. Jour. Aero. Sci., vol. 15, no. 8, Aug. 1948, pp. 473-485.

19. Bauersfeld, W.: Zuschrift an die Redaktion. Z.V.D.I., Bd. 49, Nr. 49, 1905, pp. 2007-2008.

20. Bragg, Stephen L., and Hawthorn, William R.: Some Exact Solutions of the Flow through Annular Cascade Actuator Discs. Jour. Aero. Sci., vol. 17, no. 4, April 1950, pp. 243-249.

21. Weske, John R.: Fluid Dynamic Aspects of Axial-Flow Compressors and Turbines. Jour. Aero. Sci., vol. 14, no. 11, Nov. 1947, pp. 651-656.

22. Bowen, John T., Sabersky, Rolf H., and Rannie, W. Duncan: Theoretical and Experimental Investigations of Axial Flow Compressors. Summary Rep., Contract N6-ori-102, Task Order IV, Office of Naval Res., and Mech. Eng. Lab., C.I.T., Jan. 1949.

23. Lamb, Horace: Hydrodynamics. Sixth ed., The Univ. Press (Cambridge), 1932, ch. VII, art. 198, pp. 301-302.

24. Jahnke, Eugen, and Emde, Fritz: Funcktionentafeln. B. G. Teubner (Leipzig), 1933, pp. 200-206.

25. Watson, G. N.: A Treatise on the Theory of Bessel Functions. Second ed., The Univ. Press (Cambridge), 1944.

26. British Assoc. for Advancement of Science: Bessel Functions, Part I. Functions of Order Zero and Unity. Math Tables, vol. VI, The Univ. Press (Cambridge), 1937.

27. Wu, Chung-Hua, and Wolfenstein, Lincoln: Application of Radial-Equilibrium Conditions to Axial-Flow Compressor and Turbine Design. NACA Rep. 955, 1950. (Formerly issued as NACA TN 1795.)

28. MacRobert, T. M.: Spherical Harmonics; an Elementary Treatise on Harmonic Functions. Dover Publishing Co. (N. Y.), 1947.

29. Magnus, W., and Oberhettinger, F.: Formeln und Sätze fur die Speziellen Funktionen der Mathematischen Physik. Julius Springer (Berlin), 1943.

TABLE I

VALUES OF CHARACTERISTIC FUNCTIONS $U_1\left(\epsilon_n r_1 \frac{r}{r_1}\right)$

FOR HUB RATIO $\frac{r_1}{r_2} = 0.6$

r/r_1 \ n	1	2	3	4	5
1.000000	0	0	0	0	0
1.033333	-.0207890	-.0215108	-.0201126	-.0195299	-.0187956
1.066667	-.0404291	-.0384502	-.0352816	-.0311073	-.0261670
1.100000	-.0585022	-.0521257	-.0424266	-.0306421	-.0182290
1.133333	-.0746416	-.0603877	-.0402641	-.0186722	-.0000153
1.166667	-.0885296	-.0626058	-.0295280	-.0000218	.0176792
1.200000	-.0999063	-.0588946	-.0127596	.0181255	.0246689
1.233333	-.1085733	-.0493220	.0062941	.0289209	.0172194
1.266667	-.1143978	-.0354039	.0234845	.0285556	.0000192
1.300000	-.1173144	-.0184335	.0351638	.0174400	-.0167452
1.333333	-.1173253	-.0001142	.0390116	.0000275	-.0234020
1.366667	-.1144993	.0177638	.0343545	-.0169618	-.0163575
1.400000	-.1089687	.0334945	.0224138	-.0271434	-.0000166
1.433333	-.1009259	.0456171	.0059270	-.0268408	.0159489
1.466667	-.0906173	.0530488	-.0114577	-.0164113	.0223122
1.500000	-.0783375	.0551800	-.0259897	-.0000182	.0156209
1.533333	-.0644207	.0519220	-.0345854	.0160214	.0000096
1.566667	-.0492333	.0437050	-.0355445	.0256576	-.0152597
1.600000	-.0331653	.0314260	-.0288149	.0253987	-.0213618
1.633333	-.0166187	.0163537	-.0160054	.0155376	-.0149499
1.666667	0	0	0	0	0

r/r_1 \ n	6	7	8	9	10
1.000000	0	0	0	0	0
1.033333	-.0179205	-.0169171	-.0158001	-.0145855	-.0132906
1.066667	-.0207392	-.0151223	-.0096145	-.0044943	-.0000023
1.100000	-.0066433	.0028725	.0094607	.0127511	.0128815
1.133333	.0124248	.0172405	.0150047	.0082920	.0000039
1.166667	.0208482	.0126417	.0000067	-.0098294	-.0125079
1.200000	.0120932	-.0054357	-.0146598	-.0110896	-.0000046
1.233333	-.0062633	-.0171639	-.0089443	.0061313	.0121651
1.266667	-.0190028	-.0100880	.0088138	.0125990	.0000048
1.300000	-.0159855	.0076763	.0140887	-.0019021	-.0118490
1.333333	-.0000129	.0167147	.0000073	-.0130000	-.0000046
1.366667	.0155757	.0075033	-.0137365	-.0020010	.0115563
1.400000	.0181051	-.0095809	-.0083945	.0120581	.0000042
1.433333	.0058220	-.0159236	.0082862	.0056626	-.0112843
1.466667	-.0109211	-.0049308	.0132635	-.0100252	-.0000033
1.500000	-.0183851	.0111387	.0000046	-.0086691	.0110307
1.533333	-.0104938	.0148249	-.0129691	.0071592	.0000024
1.566667	.0055562	.0024157	-.0079327	.0106866	-.0107934
1.600000	.0169288	-.0123424	.0078457	-.0036656	-.0000013
1.633333	.0142547	-.0134561	.0125672	-.0116009	.0105710
1.666667	0	0	0	0	0

NACA

TABLE II

VALUES OF INFLUENCE FUNCTION $K(r,z;\ \alpha,\beta)$ FOR HUB RATIO $\frac{r_1}{r_2} = 0.6$

(a) $\frac{\alpha}{r_1} = 1.033333$

$z - (\beta/r_1)$ \ r/r_1	1.066667	1.133333	1.200000	1.266667	1.333333	1.400000	1.466667	1.533333	1.600000
0.033333	0.010513	0.011491	0.011283	0.009912	0.008649	0.006898	0.005293	0.003481	0.001788
.100000	.004793	.007204	.007853	.007545	.006748	.005639	.004362	.002972	.001516
.166667	.002645	.004510	.005398	.005528	.005155	.004443	.003511	.002430	.001249
.233333	.001616	.002924	.003716	.003935	.003860	.003417	.002754	.001937	.001007
.300000	.001052	.001958	.002579	.002870	.002857	.002590	.002122	.001508	.000789
.366667	.000707	.001342	.001811	.002063	.002098	.001937	.001611	.001156	.000607
.433333	.000488	.000936	.001282	.001485	.001535	.001437	.001209	.000875	.000463
.500000	.000342	.000661	.000913	.001072	.001121	.001060	.000900	.000655	.000348
.566667	.000243	.000470	.000654	.000774	.000818	.000779	.000665	.000487	.000260
.633333	.000172	.000336	.000472	.000561	.000595	.000571	.000490	.000361	.000192
.700000	.000124	.000243	.000341	.000407	.000434	.000418	.000361	.000265	.000142
.766667	.000089	.000175	.000246	.000296	.000316	.000305	.000264	.000195	.000104
.833333	.000064	.000126	.000178	.000214	.000230	.000223	.000194	.000143	.000076
.900000	.000047	.000092	.000129	.000156	.000168	.000162	.000141	.000105	.000056
.966667	.000034	.000067	.000095	.000113	.000122	.000119	.000103	.000076	.000041
1.033333	.000025	.000048	.000068	.000082	.000089	.000087	.000075	.000056	.000030
1.100000	.000018	.000035	.000050	.000060	.000065	.000063	.000055	.000041	.000022
1.166667	.000013	.000025	.000036	.000044	.000047	.000046	.000040	.000030	.000016
1.233333	.000009	.000019	.000026	.000032	.000034	.000033	.000029	.000022	.000012
1.300000	.000007	.000013	.000019	.000023	.000025	.000024	.000021	.000016	.000008

(b) $\frac{\alpha}{r_1} = 1.100000$

$z - (\beta/r_1)$ \ r/r_1	1.066667	1.133333	1.200000	1.266667	1.333333	1.400000	1.466667	1.533333	1.600000
0.033333	0.022048	0.033845	0.033305	0.030556	0.026370	0.021952	0.016847	0.011578	0.005896
.100000	.011999	.020138	.023070	.022723	.020637	.017545	.013769	.009516	.004895
.166667	.007159	.012737	.015772	.016521	.015652	.013678	.010935	.007645	.003960
.233333	.004549	.008384	.010878	.011898	.011659	.010442	.008497	.006014	.003137
.300000	.003020	.005685	.007584	.008544	.008597	.007864	.006496	.004642	.002434
.366667	.002060	.003933	.005345	.006145	.006301	.005859	.004901	.003533	.001861
.433333	.001434	.002759	.003797	.004428	.004606	.004333	.003662	.002659	.001408
.500000	.001011	.001956	.002715	.003199	.003359	.003191	.002717	.001985	.001055
.566667	.000719	.001397	.001950	.002314	.002449	.002342	.002006	.001472	.000785
.633333	.000515	.001003	.001406	.001677	.001785	.001715	.001476	.001086	.000580
.700000	.000371	.000722	.001016	.001217	.001299	.001255	.001083	.000799	.000427
.766667	.000267	.000522	.000737	.000884	.000947	.000916	.000792	.000586	.000313
.833333	.000193	.000378	.000534	.000642	.000689	.000668	.000580	.000429	.000230
.900000	.000140	.000274	.000388	.000467	.000502	.000488	.000424	.000314	.000168
.966667	.000102	.000199	.000282	.000340	.000365	.000355	.000309	.000229	.000123
1.033333	.000073	.000145	.000205	.000248	.000266	.000259	.000225	.000167	.000089
1.100000	.000053	.000105	.000148	.000180	.000194	.000189	.000165	.000122	.000066
1.166667	.000039	.000076	.000131	.000141	.000141	.000138	.000120	.000089	.000048
1.233333	.000028	.000056	.000079	.000095	.000103	.000100	.000087	.000065	.000035
1.300000	.000021	.000040	.000057	.000069	.000075	.000073	.000064	.000047	.000025

NACA

TABLE II.- Continued

VALUES OF INFLUENCE FUNCTION $K(r,z;\ \alpha,\beta)$ FOR HUB RATIO $\frac{r_1}{r_2} = 0.6$ - Continued

(c) $\frac{\alpha}{r_1} = 1.166667$

$z - (\beta/r_1)$ \ r/r_1	1.066667	1.133333	1.200000	1.266667	1.333333	1.400000	1.466667	1.533333	1.600000
0.033333	0.022760	0.044703	0.054771	0.051300	0.045182	0.037337	0.028975	0.019771	0.010149
.100000	.015088	.028264	.035918	.037176	.034490	.029585	.023338	.016168	.008330
.166667	.009946	.018643	.024398	.026564	.025738	.022773	.018336	.012869	.006679
.233333	.006678	.012636	.016907	.018990	.018974	.017212	.014113	.010026	.005239
.300000	.004571	.008731	.011870	.013618	.013901	.012853	.010698	.007680	.004039
.366667	.003181	.006119	.008416	.009797	.010156	.009523	.008017	.005805	.003068
.433333	.002240	.004332	.006008	.007068	.007409	.007018	.005962	.004345	.002306
.500000	.001592	.003090	.004312	.005110	.005398	.005155	.004407	.003228	.001718
.566667	.001139	.002217	.003107	.003701	.003933	.003777	.003246	.002386	.001273
.633333	.000819	.001597	.002244	.002683	.002865	.002762	.002382	.001756	.000939
.700000	.000590	.001153	.001625	.001949	.002807	.002018	.001745	.001288	.000690
.766667	.000427	.000835	.001179	.001416	.001520	.001473	.001276	.000944	.000505
.833333	.000309	.000605	.000855	.001030	.001106	.001074	.000932	.000691	.000370
.900000	.000224	.000440	.000622	.000748	.000806	.000783	.000681	.000505	.000270
.966667	.000163	.000319	.000452	.000544	.000587	.000571	.000497	.000368	.000198
1.033333	.000119	.000232	.000328	.000397	.000427	.000416	.000362	.000269	.000144
1.100000	.000086	.000169	.000239	.000288	.000311	.000304	.000263	.000196	.000105
1.166667	.000062	.000122	.000174	.000210	.000226	.000221	.000192	.000143	.000077
1.233333	.000045	.000089	.000126	.000153	.000165	.000161	.000140	.000104	.000056
1.300000	.000033	.000065	.000092	.000111	.000120	.000117	.000102	.000076	.000041

(d) $\frac{\alpha}{r_1} = 1.233333$

$z - (\beta/r_1)$ \ r/r_1	1.066667	1.133333	1.200000	1.266667	1.333333	1.400000	1.466667	1.533333	1.600000
0.033333	0.021234	0.042967	0.063434	0.070758	0.063681	0.053492	0.041352	0.028428	0.014523
.100000	.015481	.030532	.042716	.048435	.047069	.041226	.032832	.022859	.011804
.166667	.011012	.021420	.029628	.034072	.034315	.031070	.025345	.017917	.009331
.233333	.007786	.015083	.020866	.024274	.024968	.023121	.019212	.013751	.007213
.300000	.005508	.010682	.014841	.017427	.018167	.017075	.014380	.010402	.005494
.366667	.003919	.007615	.010623	.012564	.013223	.012558	.010675	.007782	.004128
.433333	.002802	.005454	.007637	.009083	.009626	.009209	.007883	.005777	.003075
.500000	.002011	.003924	.005510	.006580	.007007	.006741	.005798	.004265	.002276
.566667	.001449	.002831	.003985	.004773	.005102	.004925	.004253	.003137	.001678
.633333	.001047	.002047	.002887	.003466	.003715	.003597	.003113	.002301	.001232
.700000	.000758	.001484	.002094	.002519	.002706	.002624	.002275	.001684	.000903
.766667	.000549	.001076	.001521	.001832	.001970	.001913	.001661	.001231	.000660
.833333	.000399	.000781	.001105	.001333	.001434	.001395	.001212	.000899	.000482
.900000	.000290	.000568	.000804	.000969	.001045	.001017	.000884	.000655	.000352
.966667	.000211	.000413	.000585	.000705	.000761	.000741	.000644	.000478	.000257
1.033333	.000153	.000301	.000425	.000514	.000554	.000539	.000469	.000349	.000187
1.100000	.000111	.000218	.000309	.000374	.000403	.000394	.000343	.000255	.000137
1.166667	.000081	.000159	.000225	.000272	.000293	.000286	.000249	.000186	.000100
1.233333	.000059	.000116	.000164	.000198	.000214	.000208	.000182	.000135	.000073
1.300000	.000043	.000084	.000119	.000144	.000156	.000152	.000132	.000098	.000053

NACA

TABLE II.- Continued

VALUES OF INFLUENCE FUNCTION $K(r,z;\ \alpha,\beta)$ FOR HUB RATIO $\frac{r_1}{r_2} = 0.6$ - Continued

(e) $\frac{\alpha}{r_1} = 1.300000$

$z - (\beta/r_1)$ \ r/r_1	1.066667	1.133333	1.200000	1.266667	1.333333	1.400000	1.466667	1.533333	1.600000
0.033333	0.018757	0.038527	0.058330	0.076460	0.080450	0.069084	0.054200	0.037163	0.019119
.100000	.014473	.029139	.042765	.052902	.055932	.051241	.041661	.029281	.015192
.166667	.010829	.021516	.030934	.037542	.039860	.037497	.031298	.022413	.011750
.233333	.007969	.015709	.022351	.026947	.028715	.027378	.023221	.016843	.008898
.300000	.005810	.011414	.016170	.019459	.020796	.019977	.017107	.012517	.006654
.366667	.004223	.008282	.011717	.014095	.015098	.014574	.012553	.009236	.004926
.433333	.003066	.006009	.008497	.010229	.010978	.010628	.009189	.006785	.003627
.500000	.002227	.004362	.006169	.007431	.007987	.007750	.006716	.004969	.002661
.566667	.001617	.003168	.004482	.005403	.005814	.005649	.004904	.003633	.001947
.633333	.001174	.002302	.003259	.003930	.004233	.004117	.003578	.002653	.001424
.700000	.000855	.001674	.002369	.002859	.003082	.002999	.002609	.001935	.001039
.766667	.000621	.001217	.001724	.002081	.002244	.002185	.001901	.001412	.000758
.833333	.000451	.000885	.001254	.001514	.001634	.001592	.001385	.001029	.000552
.900000	.000329	.000644	.000913	.001103	.001190	.001159	.001010	.000750	.000403
.966667	.000239	.000470	.000665	.000802	.000866	.000845	.000735	.000546	.000294
1.033333	.000174	.000341	.000483	.000584	.000631	.000615	.000536	.000398	.000214
1.100000	.000127	.000248	.000352	.000426	.000459	.000448	.000390	.000290	.000156
1.166667	.000092	.000181	.000257	.000310	.000334	.000326	.000284	.000211	.000113
1.233333	.000067	.000132	.000187	.000226	.000243	.000237	.000207	.000154	.000083
1.300000	.000049	.000096	.000136	.000164	.000177	.000173	.000151	.000112	.000060

(f) $\frac{\alpha}{r_1} = 1.366667$

$z - (\beta/r_1)$ \ r/r_1	1.066667	1.133333	1.200000	1.266667	1.333333	1.400000	1.466667	1.533333	1.600000
0.033333	0.015951	0.032681	0.050176	0.067342	0.082529	0.082532	0.066265	0.046115	0.023654
.100000	.012673	.025742	.038567	.049947	.057380	.057115	.048595	.034878	.018252
.166667	.009800	.019703	.028974	.036547	.040895	.040539	.035160	.025759	.013660
.233333	.007423	.014804	.021495	.026685	.029462	.029100	.025410	.018809	.010055
.300000	.005550	.011001	.015834	.019471	.021335	.021014	.018387	.013668	.007332
.366667	.004109	.008117	.011620	.014204	.015491	.015222	.013322	.009919	.005330
.433333	.003025	.005962	.008505	.010358	.011264	.011048	.009664	.007197	.003871
.500000	.002219	.004367	.006217	.007552	.008196	.008027	.007016	.005225	.002810
.566667	.001625	.003192	.004539	.005506	.005965	.005836	.005098	.003795	.002041
.633333	.001187	.002332	.003311	.004013	.004343	.004246	.003706	.002758	.001483
.700000	.000867	.001702	.002415	.002923	.003163	.003089	.002695	.002005	.001078
.766667	.000631	.001241	.001759	.002129	.002302	.002248	.001961	.001459	.000784
.833333	.000461	.000904	.001283	.001551	.001676	.001637	.001427	.001062	.000570
.900000	.000336	.000659	.000935	.001130	.001221	.001191	.001038	.000772	.000415
.966667	.000245	.000480	.000680	.000823	.000889	.000867	.000756	.000562	.000302
1.033333	.000179	.000350	.000496	.000599	.000647	.000631	.000550	.000408	.000220
1.100000	.000130	.000255	.000361	.000437	.000471	.000460	.000401	.000298	.000160
1.166667	.000094	.000185	.000263	.000318	.000343	.000334	.000292	.000217	.000116
1.233333	.000069	.000135	.000192	.000232	.000250	.000244	.000212	.000158	.000085
1.300000	.000050	.000098	.000140	.000168	.000182	.000177	.000155	.000115	.000062

NACA

TABLE II.- Continued

VALUES OF INFLUENCE FUNCTION $K(r,z;\ \alpha,\beta)$ FOR HUB RATIO $\frac{r_1}{r_2} = 0.6$ - Continued

(g) $\frac{\alpha}{r_1} = 1.433333$

$z - (\beta/r_1)$ \ r/r_1	1.066667	1.133333	1.200000	1.266667	1.333333	1.400000	1.466667	1.533333	1.600000
0.033333	0.012753	0.026308	0.040266	0.054882	0.068754	0.080373	0.075789	0.054094	0.028167
.100000	.010366	.021154	.031978	.042297	.050825	.055035	.051066	.038449	.020542
.166667	.008194	.016578	.024691	.031877	.037057	.038725	.035435	.026985	.014616
.233333	.006333	.012724	.018716	.023725	.026965	.027595	.024964	.019008	.010337
.300000	.004822	.009625	.014010	.017521	.019622	.019812	.017759	.013465	.007316
.366667	.003625	.007200	.010402	.012885	.014283	.014284	.012714	.009601	.005205
.433333	.002699	.005345	.007681	.009450	.010398	.010329	.009143	.006878	.003722
.500000	.001998	.003946	.005650	.006916	.007570	.007483	.006597	.004949	.002674
.566667	.001472	.002903	.004144	.005054	.005513	.005428	.004771	.003569	.001927
.633333	.001081	.002130	.003033	.003691	.004014	.003942	.003457	.002582	.001393
.700000	.000793	.001558	.002217	.002693	.002923	.002865	.002508	.001871	.001007
.766667	.000580	.001139	.001619	.001963	.002128	.002084	.001821	.001358	.000731
.833333	.000423	.000832	.001182	.001431	.001550	.001516	.001324	.000986	.000530
.900000	.000309	.000607	.000862	.001043	.001129	.001102	.000963	.000716	.000385
.966667	.000226	.000442	.000628	.000760	.000822	.000802	.000700	.000521	.000280
1.033333	.000165	.000323	.000458	.000553	.000599	.000584	.000509	.000379	.000204
1.100000	.000120	.000236	.000334	.000404	.000436	.000425	.000370	.000275	.000148
1.166667	.000087	.000171	.000243	.000294	.000317	.000309	.000270	.000201	.000108
1.233333	.000064	.000125	.000177	.000214	.000231	.000225	.000196	.000146	.000078
1.300000	.000046	.000091	.000129	.000156	.000168	.000164	.000143	.000106	.000057

(h) $\frac{\alpha}{r_1} = 1.500000$

$z - (\beta/r_1)$ \ r/r_1	1.066667	1.133333	1.200000	1.266667	1.333333	1.400000	1.466667	1.533333	1.600000
0.033333	0.009384	0.019254	0.029694	0.040335	0.051362	0.061350	0.068857	0.059183	0.031752
.100000	.007703	.015752	.023929	.031961	.039212	.044475	.045187	.037453	.021063
.166667	.006174	.012539	.018805	.024604	.029269	.031787	.030716	.024721	.013894
.233333	.004843	.009769	.014476	.018596	.021577	.022731	.021293	.016764	.009333
.300000	.003734	.007483	.010975	.013889	.015812	.016301	.014956	.011586	.006391
.366667	.002836	.005656	.008225	.010289	.011551	.011729	.010607	.008123	.004448
.433333	.002131	.004233	.006118	.007585	.008427	.008462	.007573	.005753	.003133
.500000	.001589	.003146	.004523	.005570	.006142	.006119	.005435	.004103	.002228
.566667	.001177	.002324	.003330	.004081	.004475	.004433	.003917	.002943	.001593
.633333	.000869	.001712	.002444	.002985	.003259	.003214	.002830	.002120	.001146
.700000	.000638	.001256	.001790	.002181	.002374	.002334	.002049	.001532	.000825
.766667	.000467	.000920	.001309	.001591	.001729	.001696	.001486	.001109	.000597
.833333	.000342	.000673	.000957	.001161	.001259	.001233	.001079	.000804	.000433
.900000	.000251	.000492	.000699	.000846	.000917	.000897	.000784	.000584	.000314
.966667	.000183	.000359	.000510	.000616	.000667	.000653	.000569	.000424	.000229
1.033333	.000133	.000262	.000371	.000449	.000486	.000475	.000415	.000309	.000166
1.100000	.000098	.000190	.000270	.000328	.000354	.000345	.000302	.000225	.000121
1.166667	.000071	.000139	.000198	.000239	.000258	.000251	.000219	.000163	.000087
1.233333	.000052	.000101	.000144	.000174	.000188	.000183	.000160	.000118	.000064
1.300000	.000038	.000074	.000105	.000126	.000137	.000133	.000116	.000086	.000046

NACA

TABLE II.- Concluded

VALUES OF INFLUENCE FUNCTION $K(r,z;\ \alpha,\beta)$ FOR HUB RATIO $\frac{r_1}{r_2} = 0.6$ - Concluded

(i) $\frac{\alpha}{r_1} = 1.566667$

$z - (\beta/r_1)$ \ r/r_1	1.066667	1.133333	1.200000	1.266667	1.333333	1.400000	1.466667	1.533333	1.600000
0.033333	0.005742	0.011889	0.018181	0.024978	0.031581	0.038500	0.044098	0.047175	0.032352
.100000	.004770	.009768	.014867	.019966	.024719	.028634	.030569	.028098	.017631
.166667	.003857	.007846	.011813	.015567	.018748	.020825	.020911	.017783	.010529
.233333	.003057	.006173	.009181	.011885	.013968	.015001	.014429	.011716	.006694
.300000	.002371	.004764	.007020	.008950	.010299	.010774	.010066	.007945	.004449
.366667	.001813	.003626	.005296	.006668	.007550	.007749	.007093	.005498	.003038
.433333	.001372	.002729	.003958	.004934	.005518	.005586	.005042	.003859	.002114
.500000	.001028	.002037	.002938	.003633	.004027	.004035	.003606	.002735	.001489
.566667	.000763	.001510	.002169	.002667	.002936	.002920	.002591	.001954	.001060
.633333	.000565	.001115	.001595	.001953	.002139	.002116	.001867	.001403	.000759
.700000	.000416	.000820	.001170	.001428	.001557	.001536	.001350	.001012	.000546
.766667	.000306	.000602	.000857	.001043	.001135	.001116	.000978	.000731	.000394
.833333	.000224	.000440	.000626	.000761	.000826	.000811	.000710	.000530	.000285
.900000	.000164	.000321	.000457	.000555	.000602	.000590	.000515	.000384	.000207
.966667	.000120	.000235	.000334	.000405	.000438	.000428	.000374	.000279	.000150
1.033333	.000087	.000172	.000244	.000294	.000319	.000312	.000272	.000202	.000109
1.100000	.000064	.000125	.000177	.000215	.000232	.000227	.000198	.000148	.000080
1.166667	.000047	.000091	.000130	.000157	.000169	.000165	.000144	.000107	.000057
1.233333	.000034	.000067	.000094	.000114	.000123	.000120	.000105	.000078	.000042
1.300000	.000025	.000048	.000069	.000083	.000090	.000087	.000076	.000057	.000030

(j) $\frac{\alpha}{r_1} = 1.633333$

$z - (\beta/r_1)$ \ r/r_1	1.066667	1.133333	1.200000	1.266667	1.333333	1.400000	1.466667	1.533333	1.600000
0.033333	0.001975	0.004010	0.006262	0.008430	0.010919	0.013001	0.015482	0.016615	0.016071
.100000	.001631	.003341	.005094	.006848	.008519	.009935	.010825	.010450	.007326
.166667	.001324	.002694	.004065	.005375	.006509	.007300	.007468	.006558	.004050
.233333	.001056	.002132	.003173	.004122	.004875	.005286	.005156	.004263	.002482
.300000	.000821	.001650	.002438	.003120	.003607	.003802	.003585	.002863	.001619
.366667	.000629	.001261	.001846	.002330	.002651	.002735	.002521	.001967	.001093
.433333	.000478	.000952	.001383	.001729	.001939	.001971	.001786	.001374	.000755
.500000	.000359	.000712	.001028	.001275	.001416	.001423	.001276	.000970	.000530
.566667	.000267	.000528	.000760	.000936	.001032	.001030	.000916	.000692	.000375
.633333	.000198	.000391	.000560	.000687	.000752	.000746	.000659	.000497	.000268
.700000	.000146	.000288	.000411	.000502	.000548	.000541	.000476	.000357	.000193
.766667	.000107	.000211	.000301	.000367	.000399	.000392	.000344	.000258	.000139
.833333	.000078	.000154	.000220	.000267	.000291	.000286	.000250	.000187	.000101
.900000	.000057	.000113	.000161	.000195	.000212	.000207	.000182	.000136	.000073
.966667	.000043	.000082	.000117	.000143	.000154	.000150	.000132	.000098	.000052
1.033333	.000031	.000061	.000086	.000104	.000112	.000109	.000095	.000071	.000038
1.100000	.000023	.000044	.000063	.000076	.000082	.000080	.000069	.000052	.000028
1.166667	.000016	.000032	.000046	.000055	.000059	.000058	.000051	.000038	.000020
1.233333	.000012	.000023	.000033	.000040	.000043	.000042	.000037	.000027	.000015
1.300000	.000009	.000017	.000024	.000029	.000032	.000031	.000027	.000020	.000011

NACA

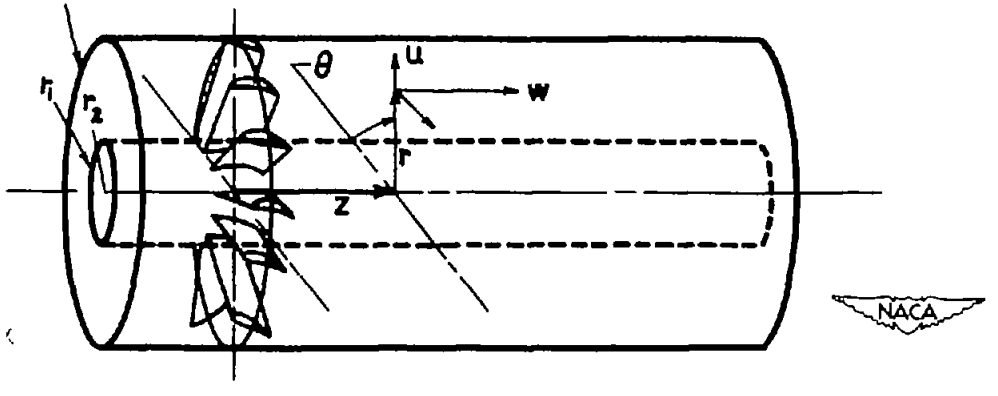

Figure 1.- Coordinate system and velocity components in axial turbomachine.

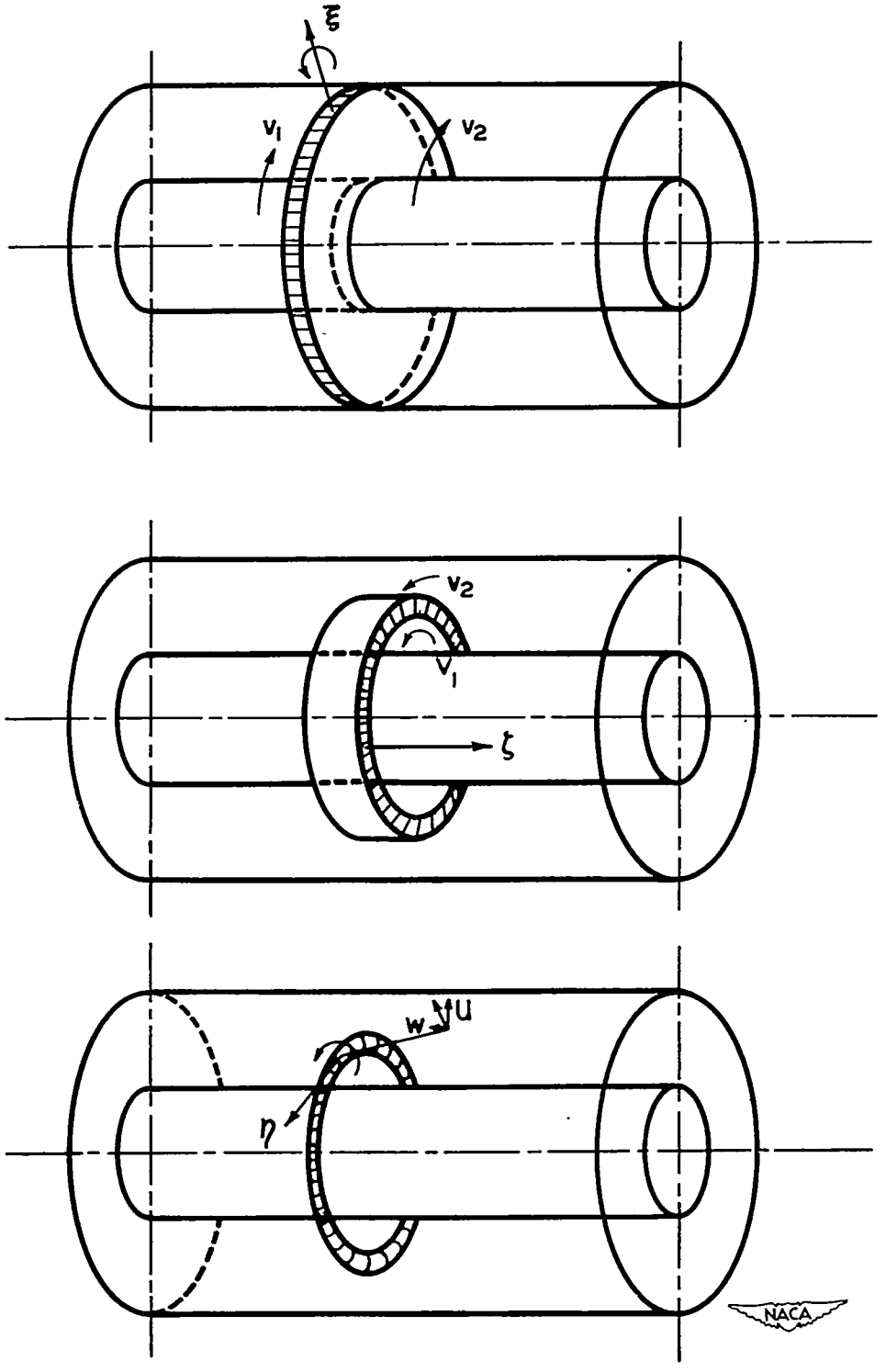

Figure 2.- Velocities induced by various vorticity components in axially symmetric flow.

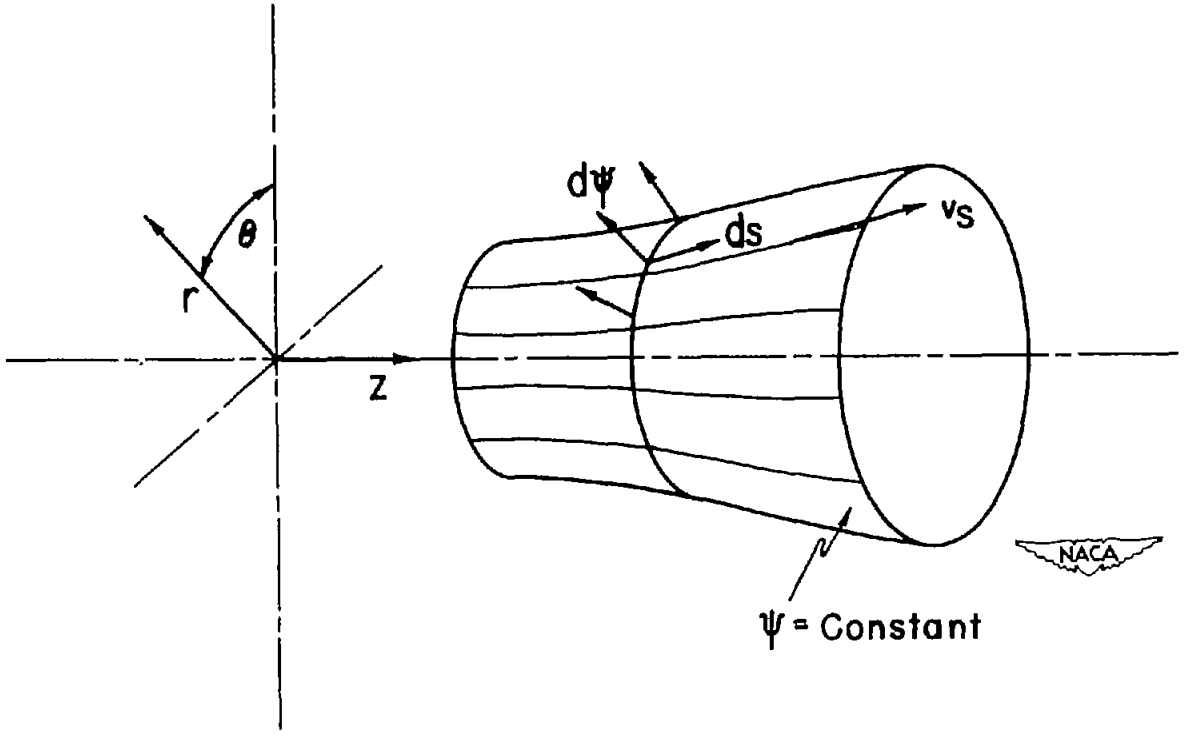

Figure 3.- Stream-surface directions of tangential and normal differentiation.

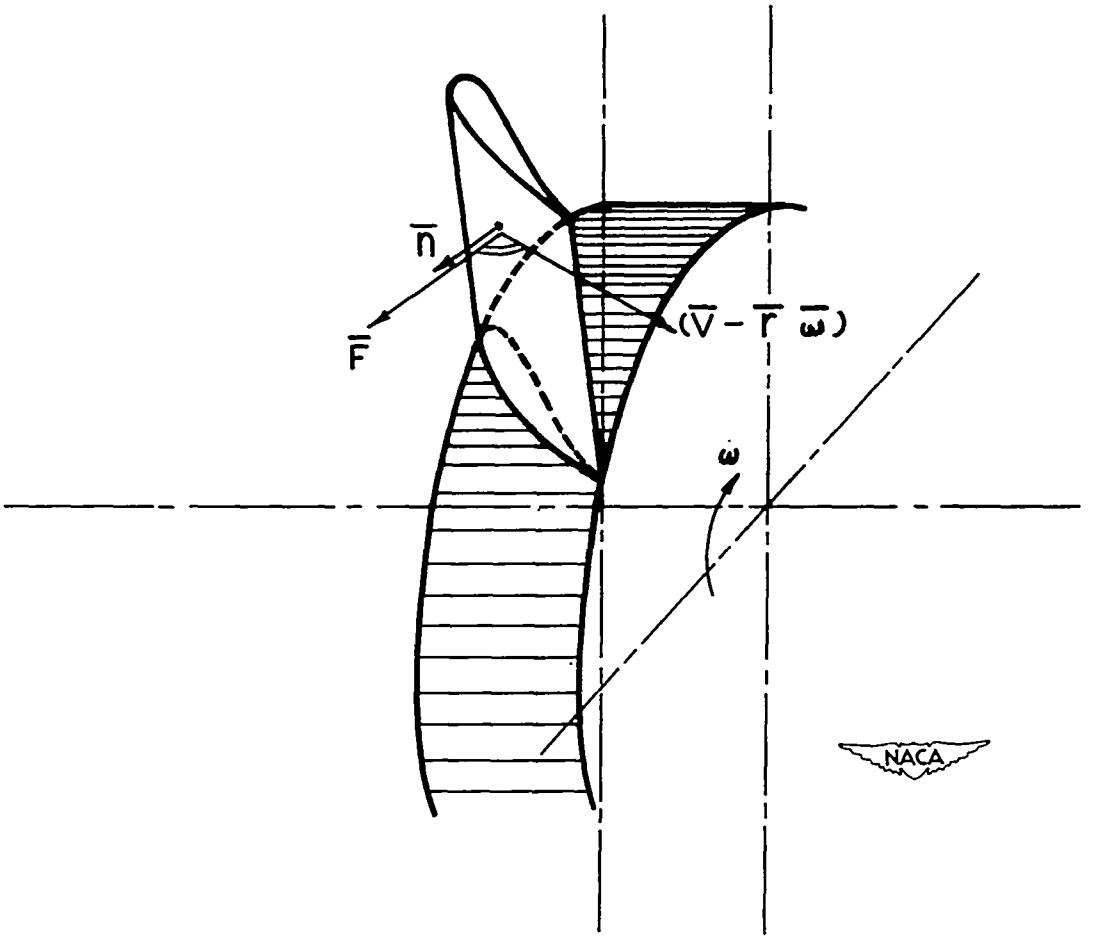

Figure 4.- Relationship between blade normal, blade force, and relative velocity.

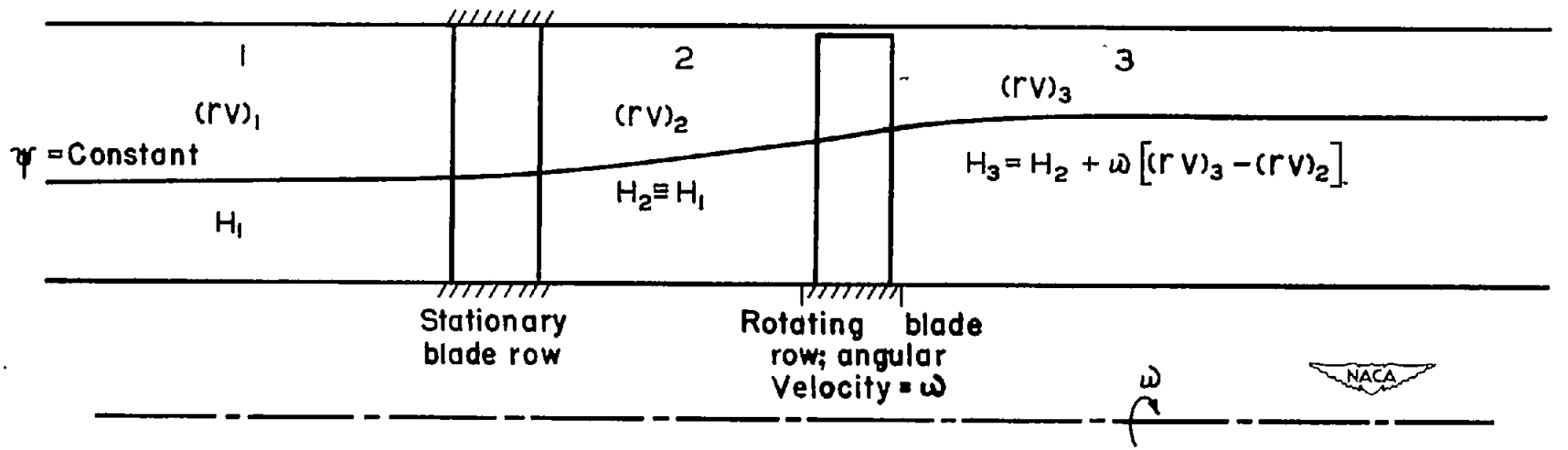

Figure 5.- Relationship between angular momentum and total head along stream surface passing through stationary and rotating blade row.

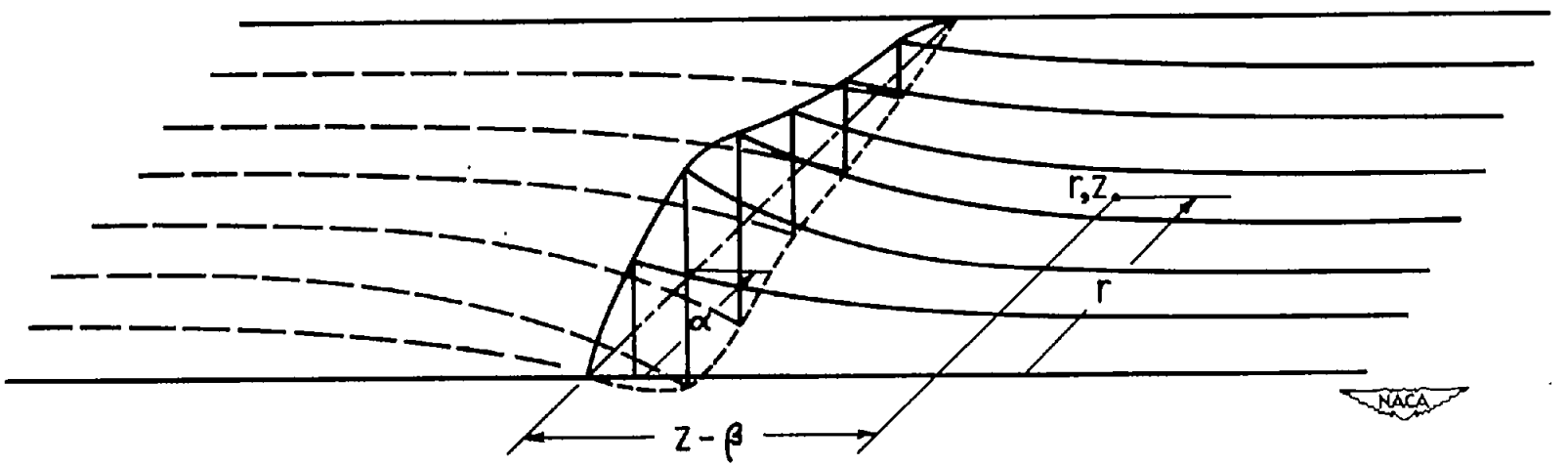

Figure 6.- Schematic diagram showing behavior of function $K(r,t;\ \alpha,\beta)$ in the meridional plane.

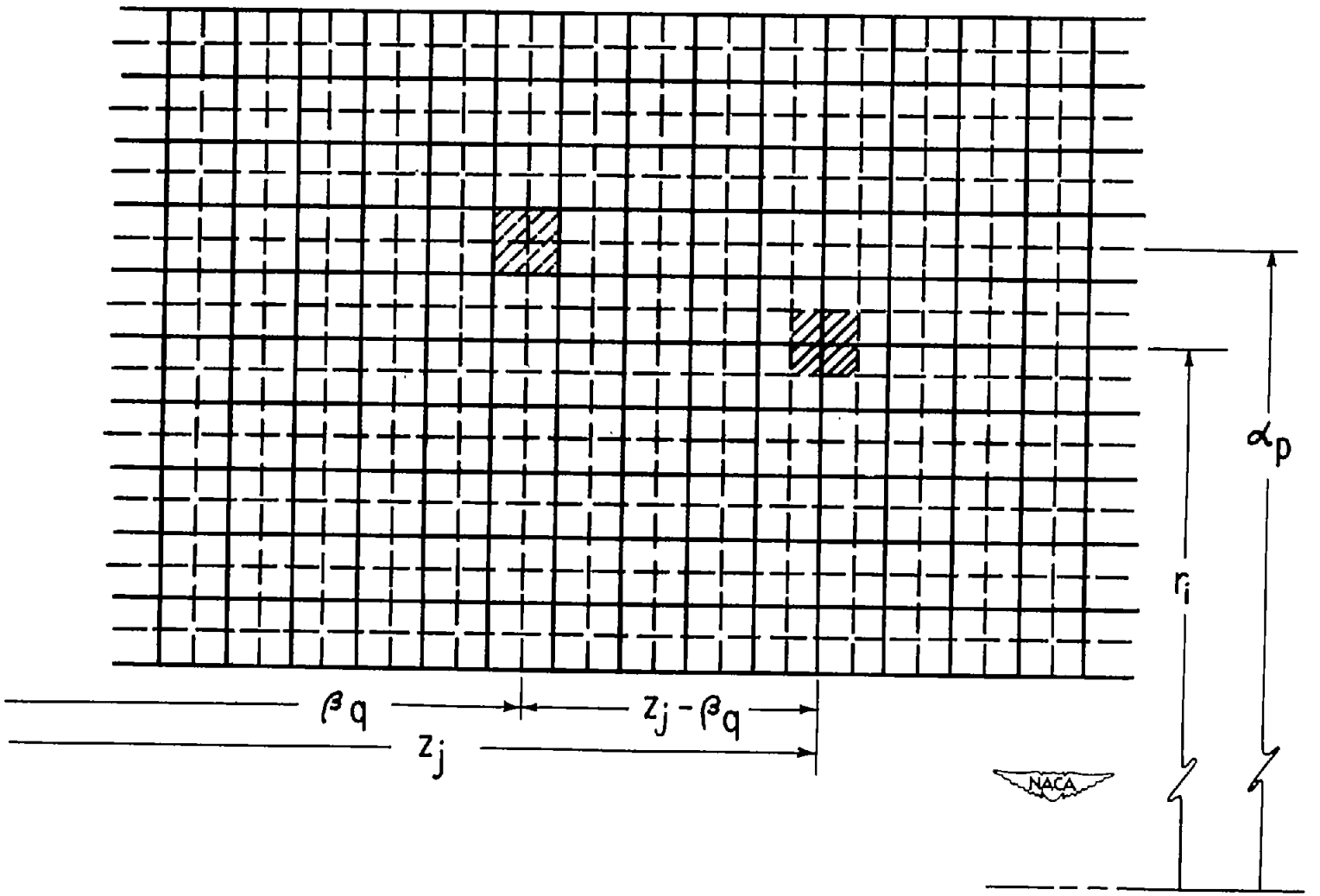

Figure 7.- Grid for numerical integration of stream function $\psi^{(3)}(r_i, z_j)$.

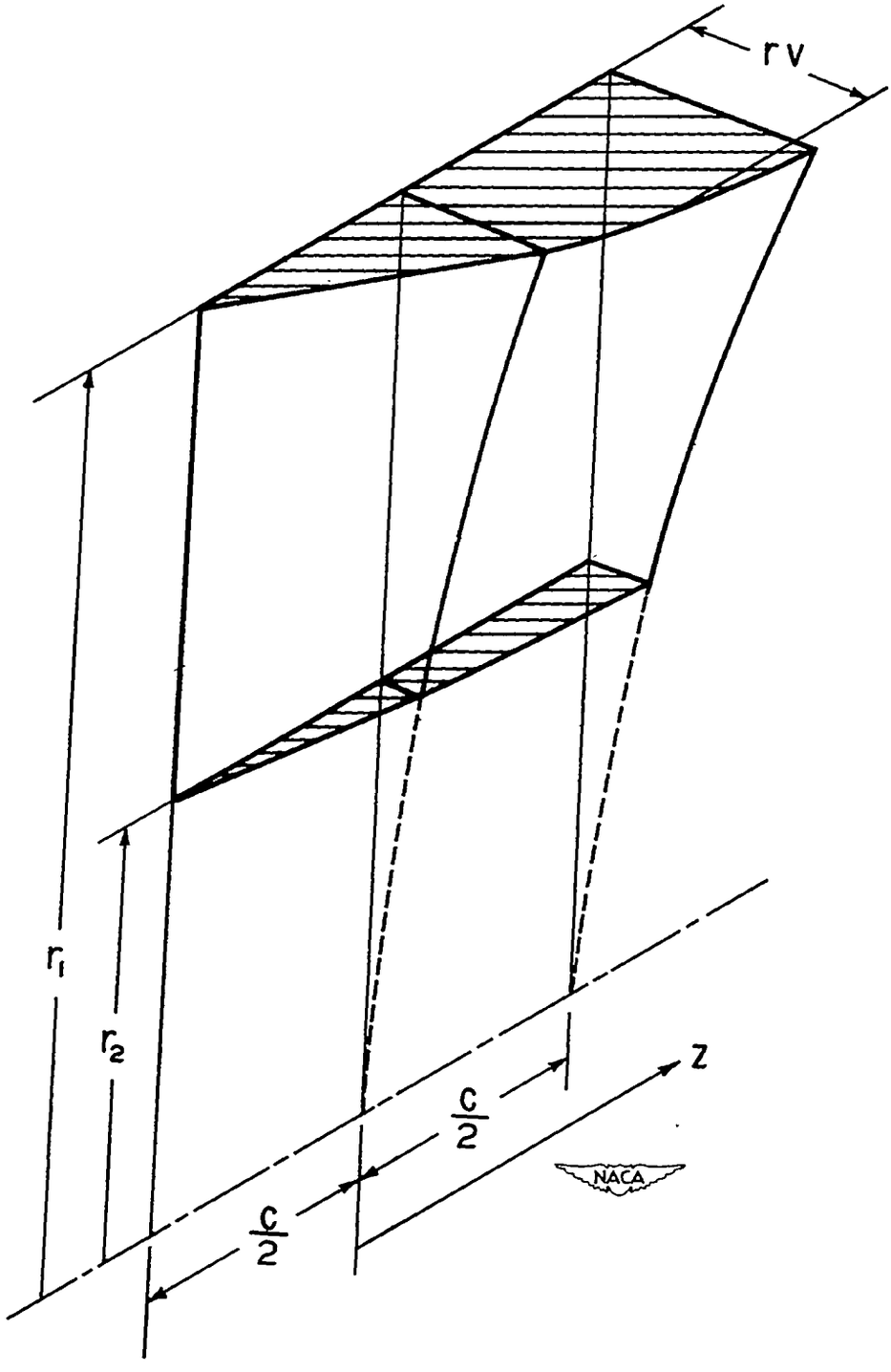

Figure 8.- Distribution of angular momentum through blade row of axial turbomachine used in example calculation.

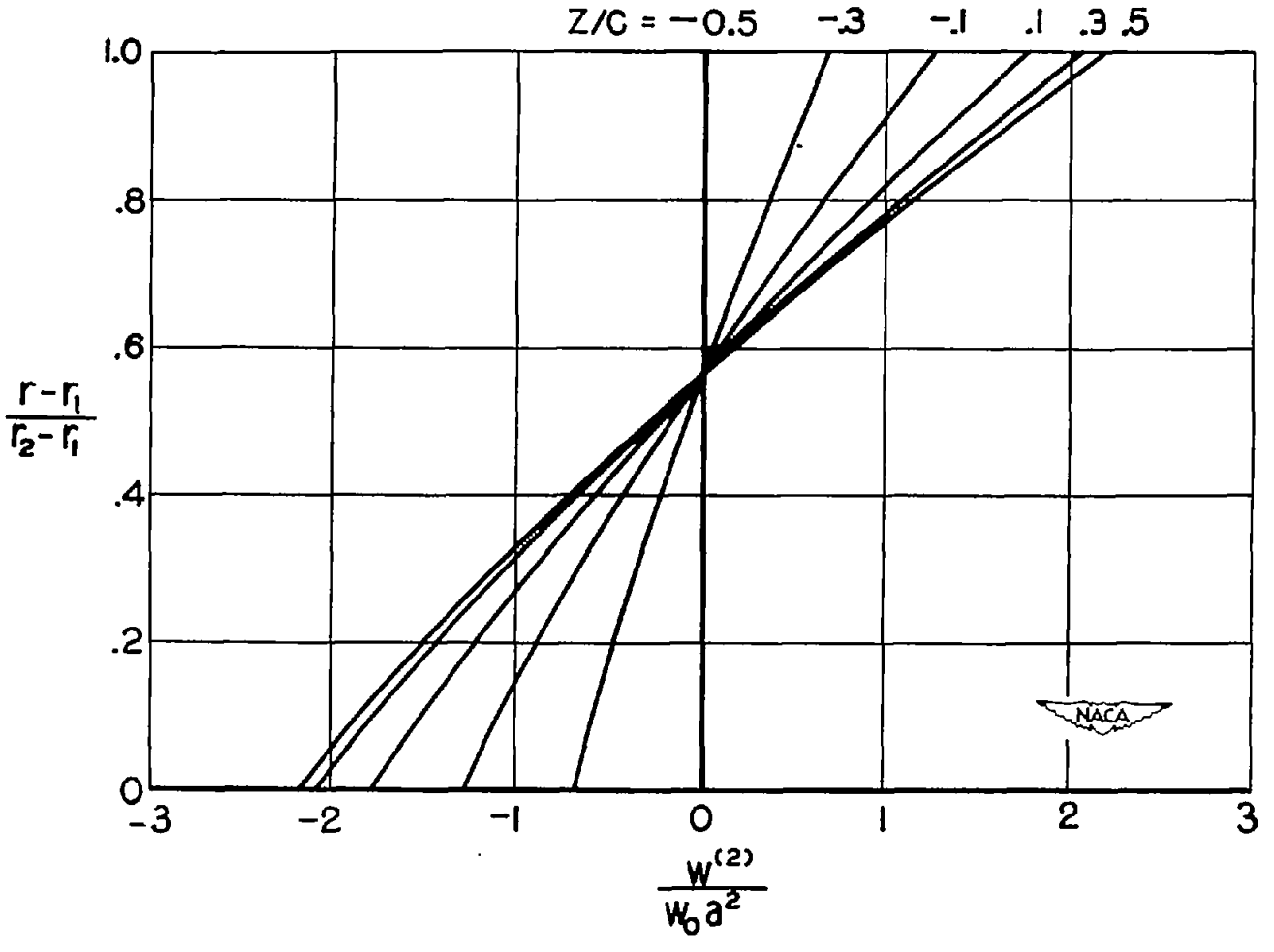

Figure 9.- Variation of axial velocity from uniform according to simple equilibrium theory. Curves independent of aspect ratio.

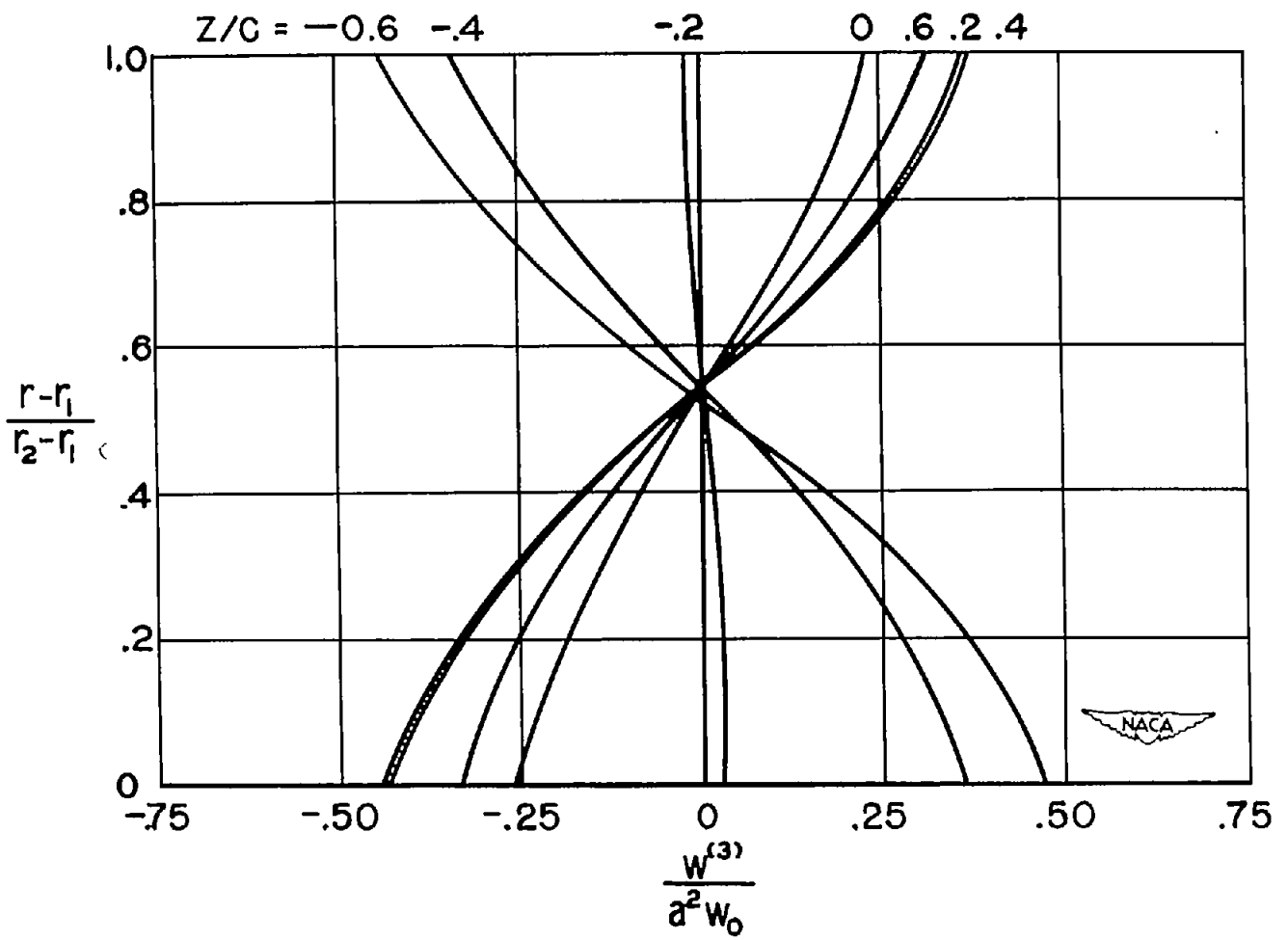

Figure 10.- Variation of axial velocity distribution from that given by simple equilibrium considerations. Aspect ratio = 2.0.

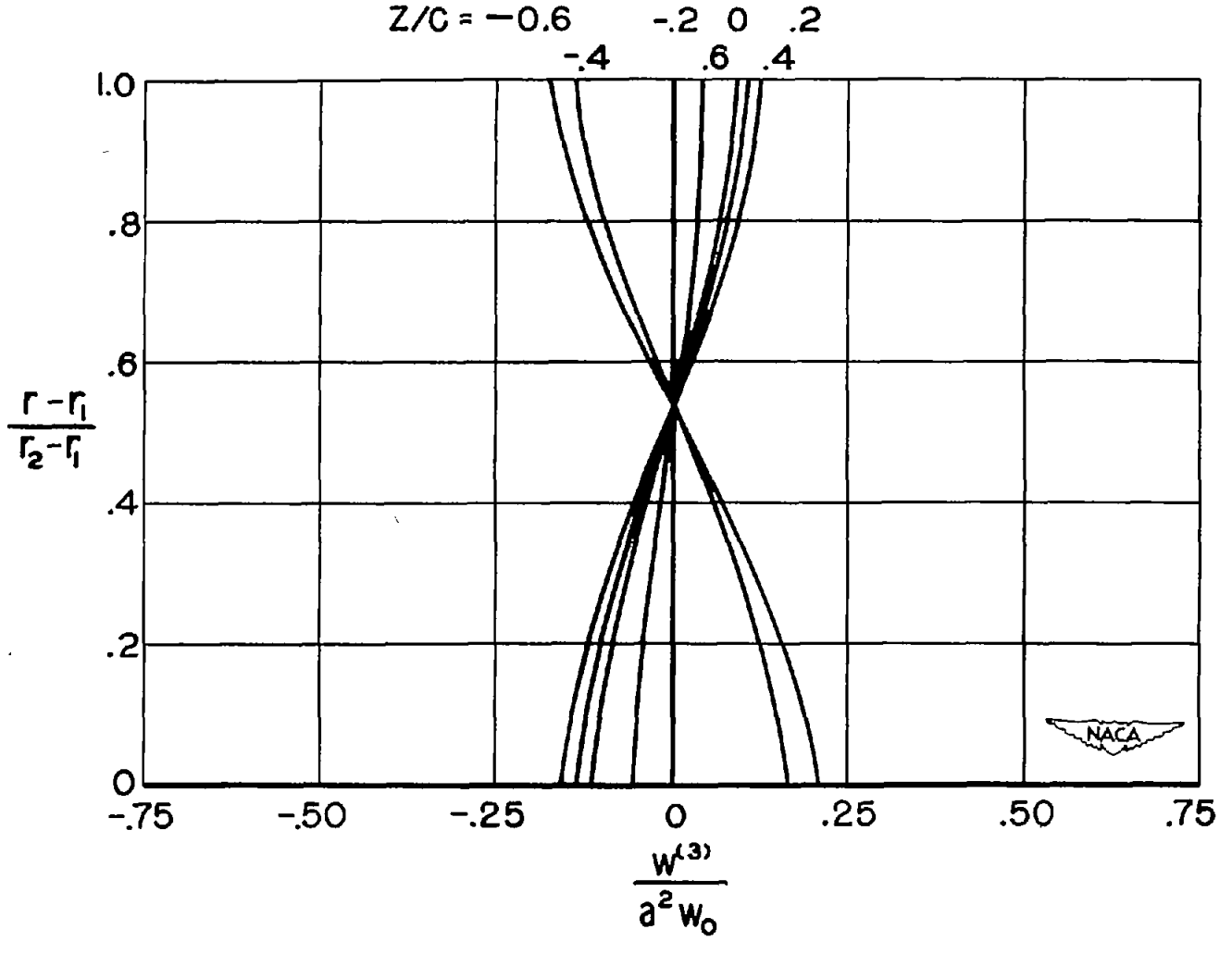

Figure 11.- Variation of axial velocity distribution from that given by simple equilibrium considerations. Aspect ratio = 2/3.

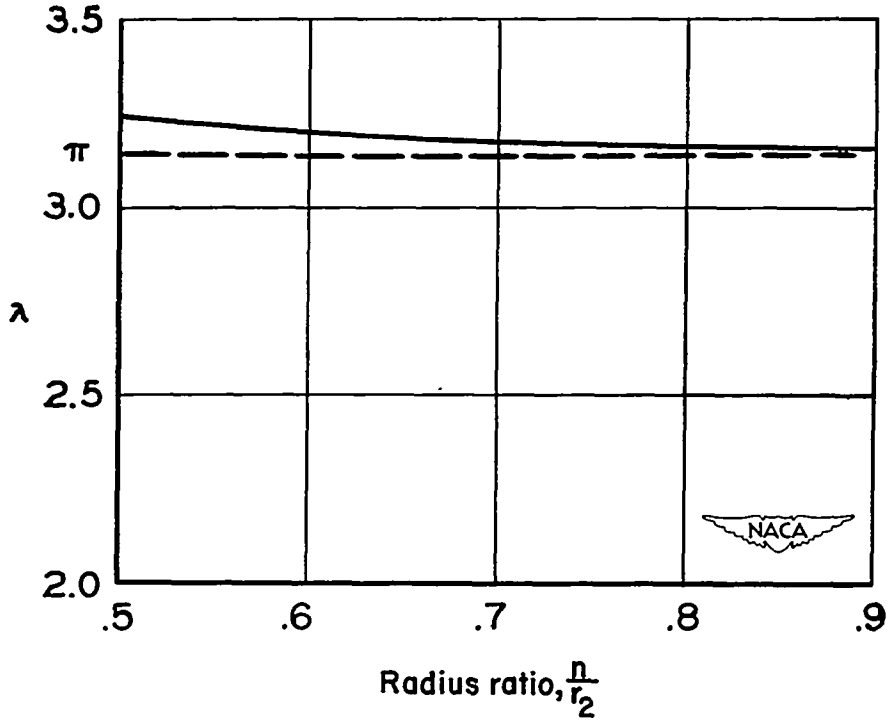

Figure 12.- Relation between exponent λ and radius ratio r_1/r_2 for blade row imparting constant angular velocity to fluid.

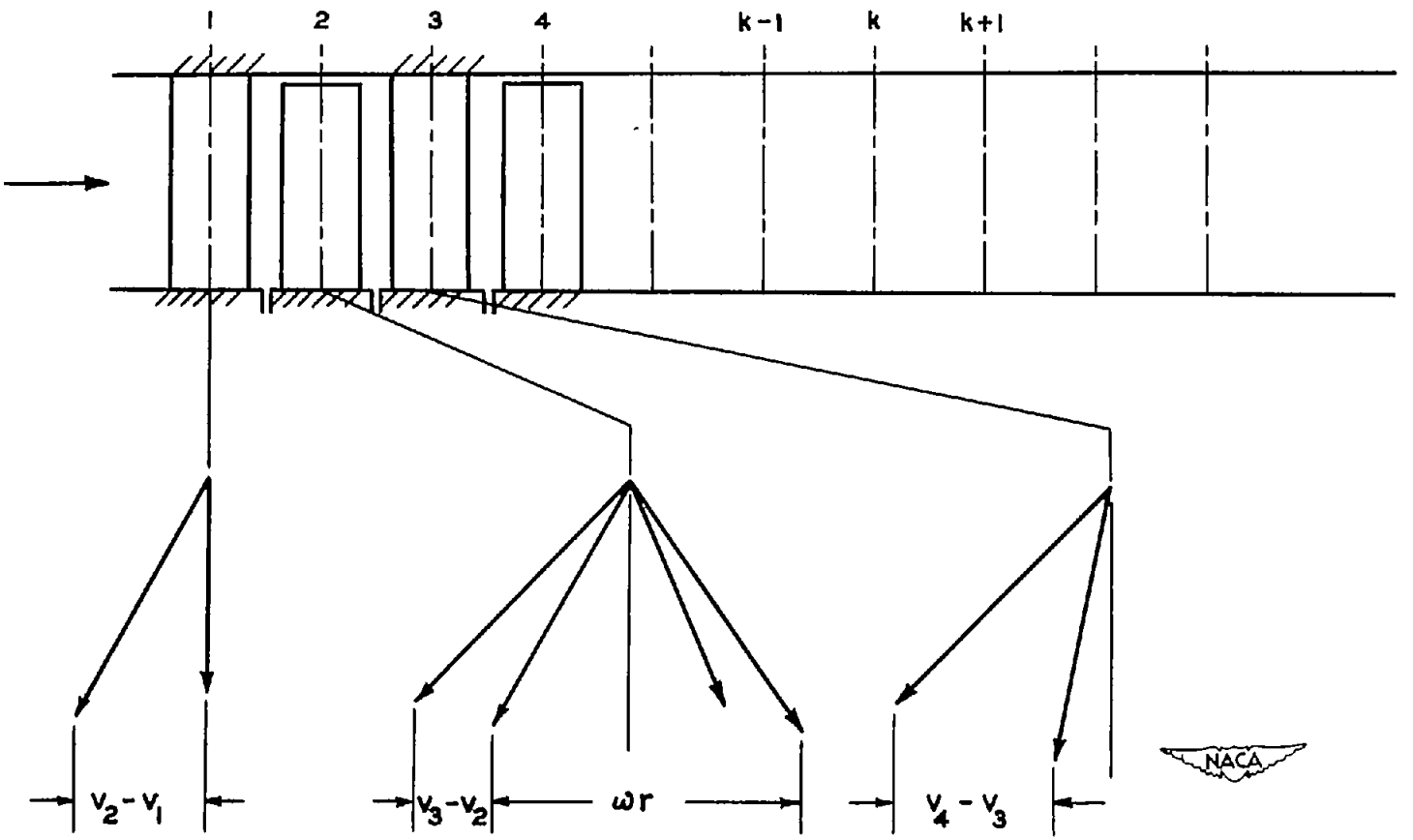

Figure 13.- Schematic representation of multistage axial turbomachine.

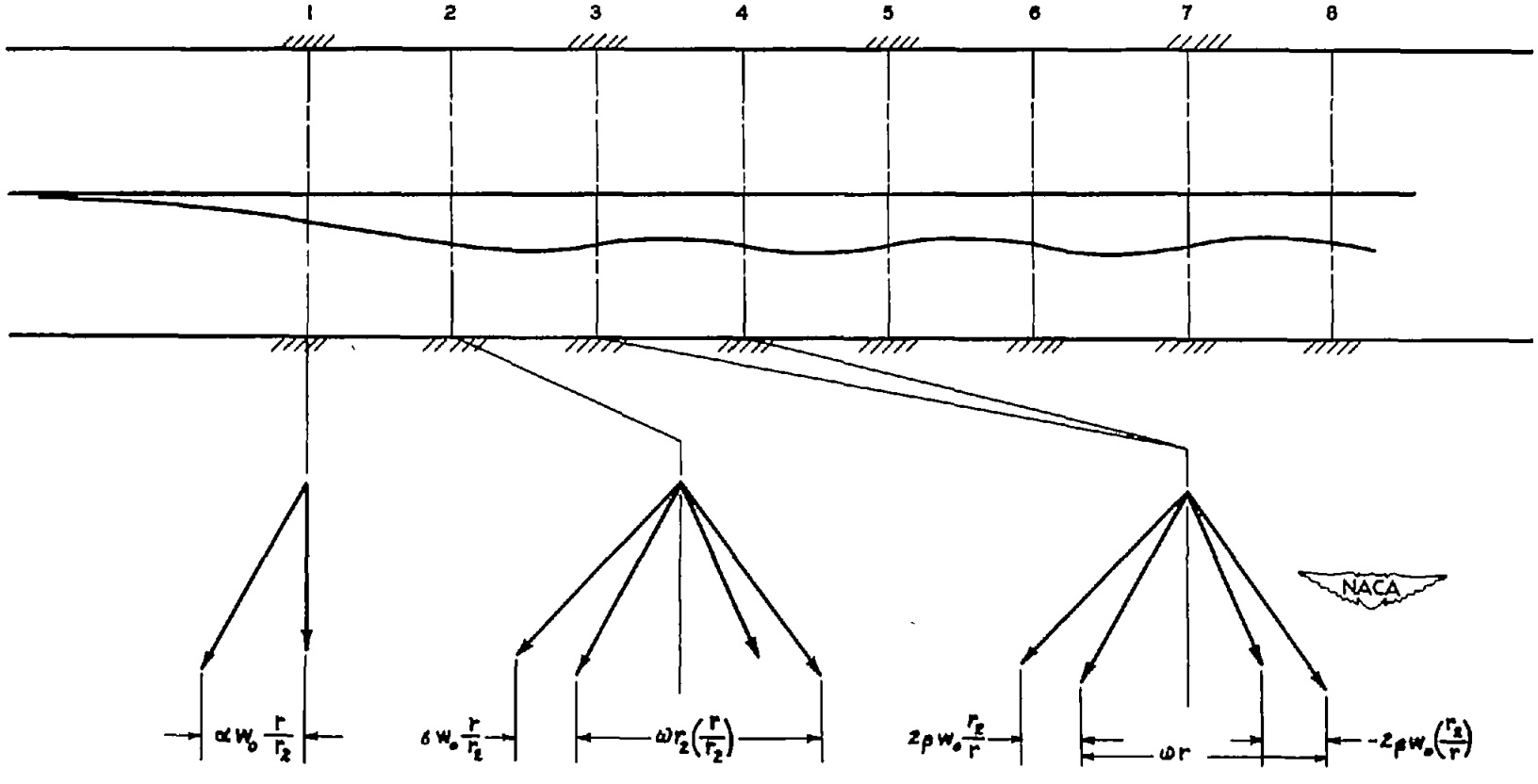

Figure 14.- Deflection of middle stream surface near entrance of multistage axial turbomachine. Vertical scale magnified.

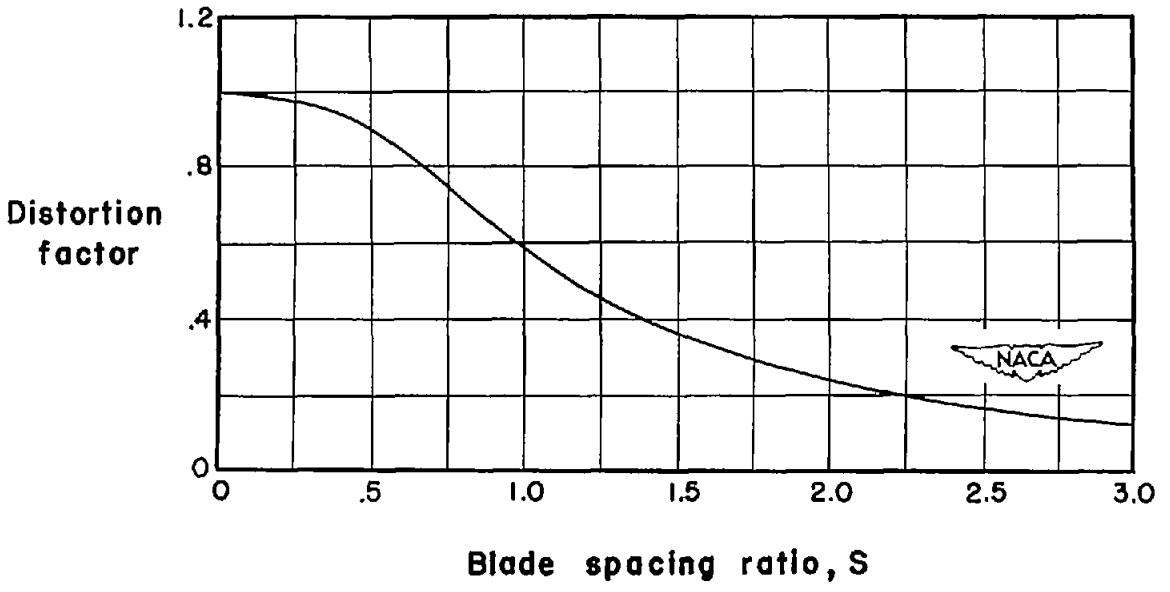

Figure 15.- Variation of blade-row interference factor with blade aspect ratio for particular multistage turbomachine utilizing similar stages. $\lambda = \pi$.

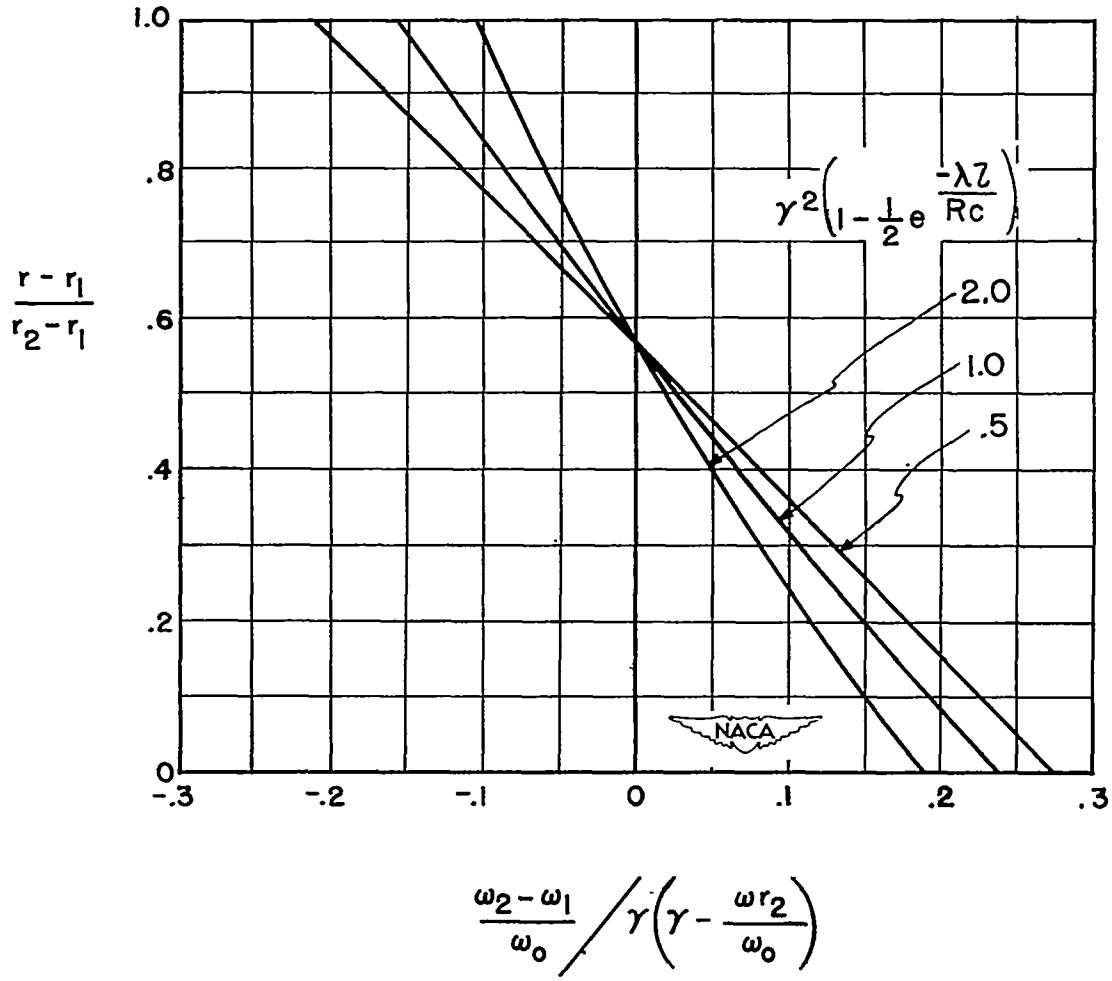

Figure 16.- Effect of blade aspect ratio on axial velocity distortion downstream of blade row with prescribed blade discharge angle. Uniform axial velocity and zero tangential velocity upstream.

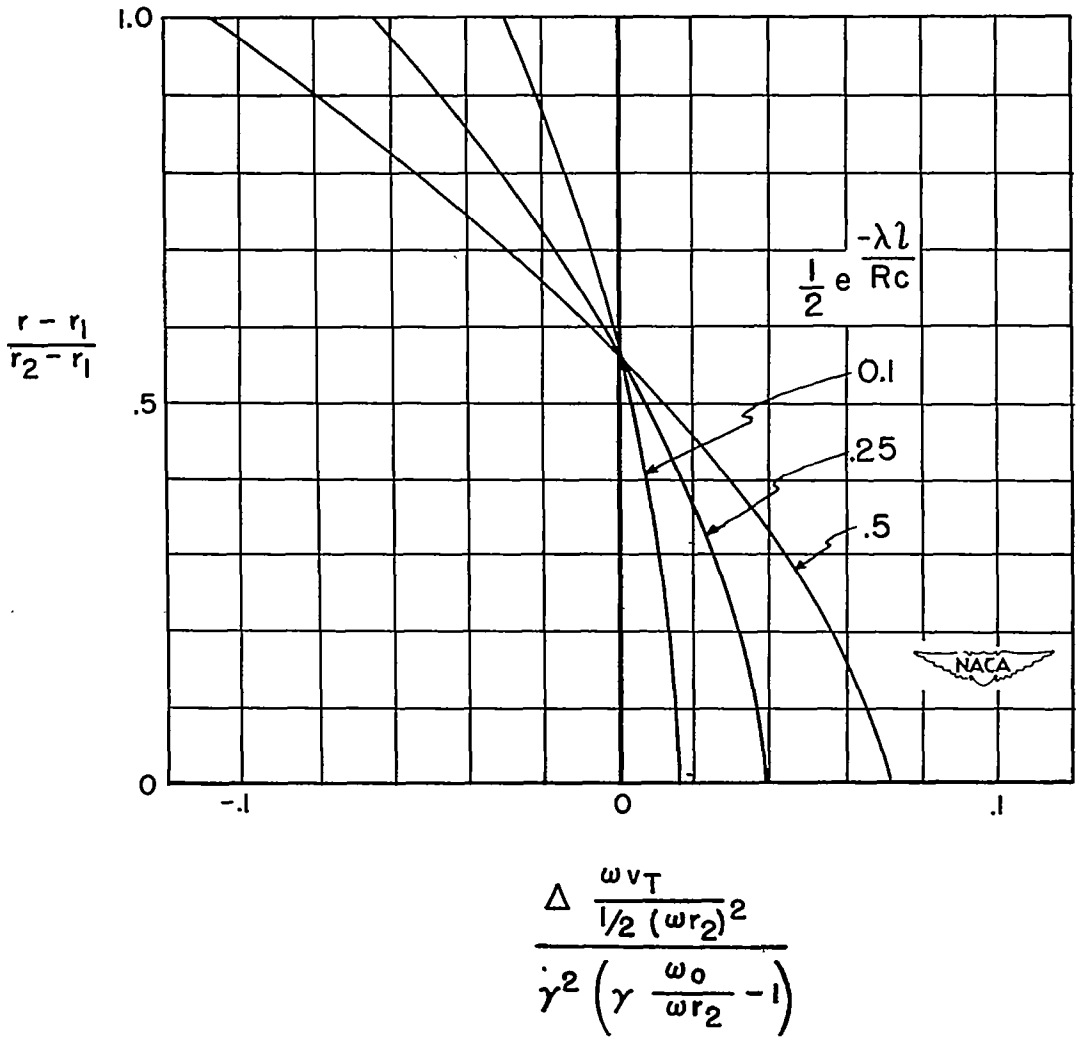

Figure 17.- Effect of blade aspect ratio on head coefficient of blade row with prescribed blade discharge angle. Uniform axial velocity and zero tangential velocity upstream.

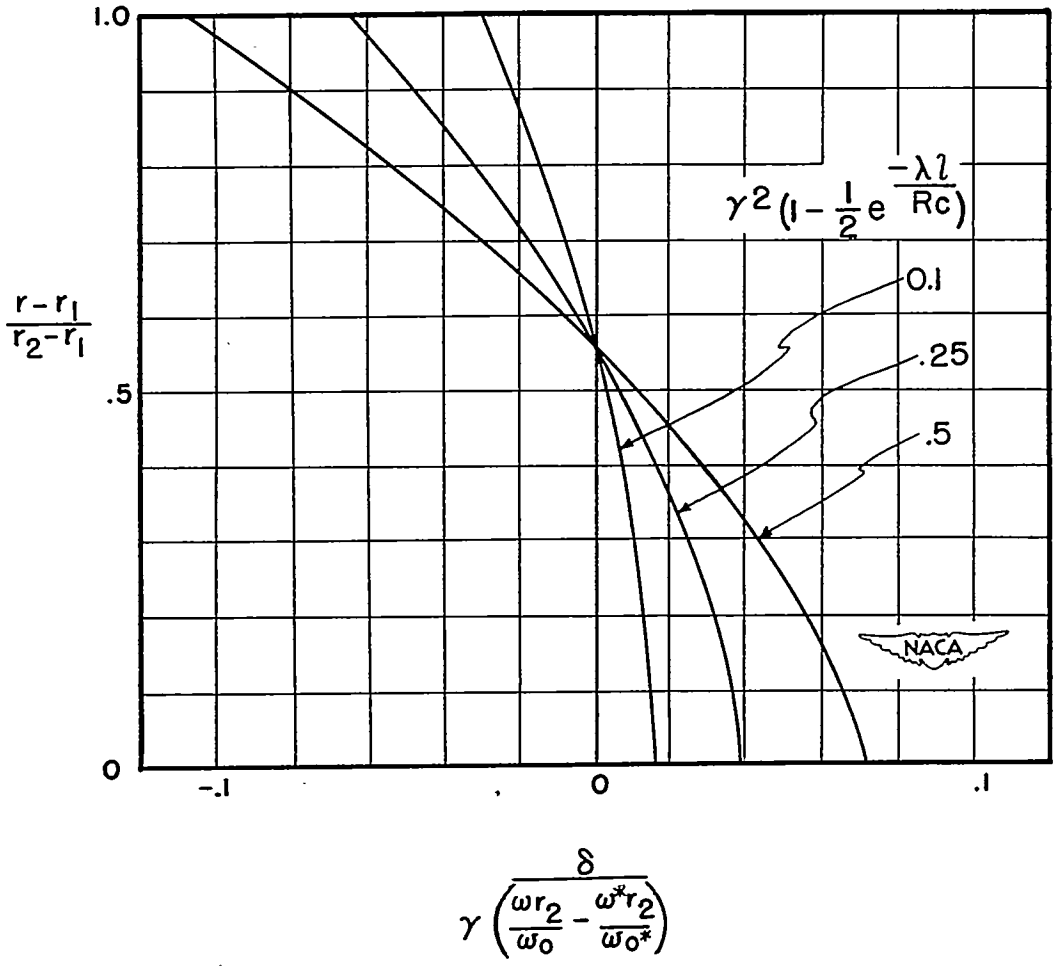

Figure 18.- Distortion of axial velocity profile resulting from operating single blade row off-design condition. Uniform axial velocity and tangential velocity upstream.

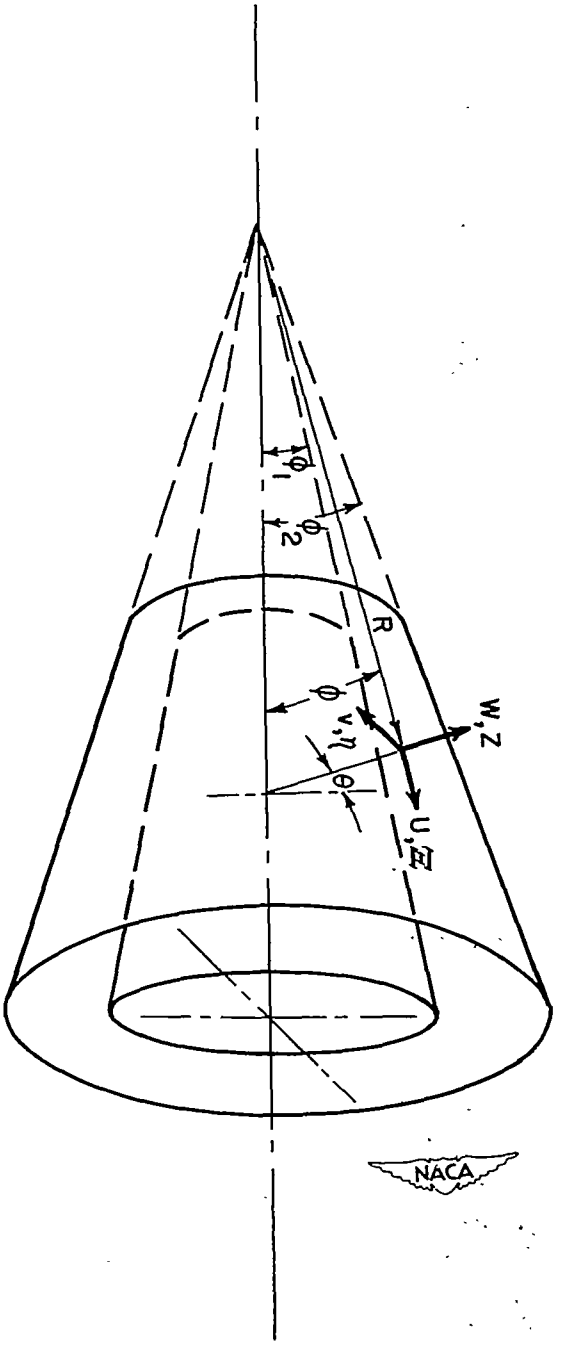

Figure 19.- Coordinate system, velocity, and vorticity component designations for conical turbomachine.

NACA-Langley - 8-17-53 - 125