9010

NACA TN 2637

TECH LIBRARY KAFB, NM
0065714

NATIONAL ADVISORY COMMITTEE FOR AERONAUTICS

TECHNICAL NOTE 2637

COMPRESSIVE BUCKLING OF FLAT RECTANGULAR METALITE TYPE SANDWICH PLATES WITH SIMPLY SUPPORTED LOADED EDGES AND CLAMPED UNLOADED EDGES

(Revised)

By Paul Seide

Langley Aeronautical Laboratory
Langley Field, Va.

Washington
February 1952

AFM C
TECHNICAL
AFL 2811

TECH LIBRARY KAFB, NM
0065714

1Q

NATIONAL ADVISORY COMMITTEE FOR AERONAUTICS

TECHNICAL NOTE 2637

COMPRESSIVE BUCKLING OF FLAT RECTANGULAR METALITE TYPE SANDWICH PLATES WITH SIMPLY SUPPORTED LOADED EDGES AND CLAMPED UNLOADED EDGES[1]

(Revised)

By Paul Seide

SUMMARY

A theoretical solution is obtained for the problem of the compressive buckling of flat rectangular Metalite type sandwich plates with simply supported loaded edges and clamped unloaded edges. The solution is based upon the general small-deflection theory for flat sandwich plates developed in NACA Rep. 899. A comparison is made of the present results and other solutions of the problem.

A comparison is also made between the present theory and experimental results for two types of sandwich plates: plates having alclad 24S-T aluminum-alloy faces and end-grain balsa-wood or cellular-cellulose-acetate cores. Better agreement is found between computed and experimental buckling stresses of sandwich plates with cellular-cellulose-acetate cores than for sandwich plates having end-grain balsa-wood cores.

INTRODUCTION

The increasing use of sandwich materials in aircraft design makes the problem of analyzing the buckling of sandwich plates one of importance. Since sandwich plates cannot be analyzed by ordinary plate theory because of the appreciable effect of low core shear stiffness on deflections, a general small-deflection theory for elastic bending and buckling of flat sandwich plates was developed in reference 1. This theory was extended to include plastic buckling in reference 2 and was applied to the problem of the elastic and plastic compressive buckling of simply supported flat rectangular Metalite type sandwich plates.

In the present paper, the elastic compressive buckling of flat rectangular Metalite type sandwich plates with simply supported loaded edges

---

[1]Supersedes NACA TN 1886, "Compressive Buckling of Flat Rectangular Metalite Type Sandwich Plates with Simply Supported Loaded Edges and Clamped Unloaded Edges," by Paul Seide, May 1949.

and clamped unloaded edges (fig. 1) is investigated. The differential equations of reference 1 are solved to yield a stability criterion giving elastic-buckling-stress coefficients implicitly in terms of the plate aspect ratio and the ratio of the plate flexural stiffness to the core shear stiffness. Charts are presented to facilitate the determination of elastic-compressive-buckling loads and an approximate correction for plasticity is outlined.

The results of the present paper are compared with those of other theoretical solutions and discrepancies are discussed in the light of the assumptions of the various theories.

Experimental buckling stresses of sandwich plates with alclad 24S-T aluminum-alloy faces and end-grain balsa-wood or cellular-cellulose-acetate cores are compared with theoretical buckling stresses computed from the present results.

SYMBOLS

E_f Young's modulus for face material

μ_f Poisson's ratio for face material

t_f face thickness

G_c shear modulus for core material

h_c core thickness

D_o flexural stiffness per unit width of Metalite type sandwich plate with faces considered as membranes

$$\left(\frac{E_f t_f \left(h_c + t_f\right)^2}{2\left(1 - \mu_f^2\right)}\right)$$

D_f flexural stiffness per unit width of both faces

$$\left(\frac{E_f t_f^3}{6\left(1 - \mu_f^2\right)}\right)$$

D_Q	shear stiffness per unit width of Metalite type sandwich plate with faces considered as membranes $\left(G_c h_c \left(1 + \frac{t_f}{h_c}\right)^2\right)$
a	plate length
b	plate width
β	plate aspect ratio (a/b)
r	core shear-flexibility coefficient $\left(\frac{\pi^2 D_o}{b^2 D_Q}\right)$
σ_{cr}	critical compressive stress in x-direction
k	elastic-buckling-stress coefficient $\left(\frac{2b^2 \sigma_{cr} t_f}{\pi^2 D_o}\right)$
N_x	critical compressive load per unit width $\left(2\sigma_{cr} t_f\right)$
x,y,z	coordinate axes (see fig. 1)
w	deflection of middle surface of plate in z-direction
m	number of half-waves in buckled-plate deflection surface in direction of loading
$\frac{Q_x}{D_Q}, \frac{Q_y}{D_Q}$	angles in xz- and yz-planes, repectively, between lines originally perpendicular to undeformed middle surface and lines perpendicular to deformed middle surface

Subscripts:

comp	computed
exp	experimental

RESULTS AND DISCUSSION

The solution of the problem of the compressive buckling of elastic flat rectangular Metalite type sandwich plates with simply supported loaded edges and clamped unloaded edges (fig. 1) is obtained herein by means of the differential equations of deformation and equilibrium derived in reference 1. Details of the solution are given in the appendix.

Stability criterion and buckling curves.- The solution to the problem considered in the present paper is embodied in the stability criterion, equation (A11) in the appendix. This equation gives the elastic-buckling-stress coefficient k implicitly in terms of the plate aspect ratio β and the core shear-flexibility coefficient r. Solutions of the stability criterion for Poisson's ratio equal to 1/3 are presented in table 1 and graphically in figure 2. The elastic-buckling-stress coefficient k is plotted in figure 2 against the plate aspect ratio β for different values of the core shear-flexibility coefficient r. As the core becomes more flexible (r increases), the effect of the clamped unloaded edges on the plate buckling strength is lessened and the buckling curves approach the curves obtained in reference 2 for plates simply supported on all edges. When the core shear-flexibility coefficient is equal to or greater than unity, the wave length of buckle is zero. In this case, as for simply supported Metalite type sandwich plates (reference 2), the elastic-buckling-stress coefficient is determined simply by the shear-flexibility parameter and is given by

$$k = \frac{1}{r} \qquad \left(r \geqq 1\right) \tag{1}$$

This result is a consequence of the assumption, implied by the theory of reference 1, that the plate faces are so thin that they can be treated as membranes having a negligible stiffness in bending about their own middle surface.

In figure 3 the elastic-buckling-stress coefficients of infinitely long Metalite type sandwich plates with clamped unloaded edges are compared with the buckling coefficients of infinitely long Metalite type sandwich plates with simply supported edges. As was noted in the discussion of figure 2, the elastic-buckling-stress coefficients of clamped plates rapidly approached those of simply supported plates as the core shear-flexibility coefficient increases, the two being equal and given by equation (1) for values of r greater than unity.

Unlike results obtained for isotropic plates with deflections due to shear neglected, the elastic-buckling-stress coefficients of Metalite type sandwich plates with simply supported loaded edges and clamped unloaded edges depend on Poisson's ratio for the face material. The variation of the elastic-buckling-stress coefficient with Poisson's ratio, however, is small.

Correction for plasticity.- Because of the complexity of the stability criterion (equation (A11)), no attempt was made to extend the solution to include buckling in the plastic range. An approximate correction for plasticity is suggested, however, by the results of references 3 and 4 from which, for long plates with edges elastically restrained against rotation, the ratio of the plastic buckling stress to the elastic buckling stress can be seen to be approximately independent of the magnitude of the elastic restraint. This fact suggests the use of the results of reference 2 for simply supported plates to obtain curves of plastic buckling stress plotted against elastic buckling stress for various values of plate aspect ratio and core shear-stiffness parameter. The appropriate curve for given values of β and r is then entered with the elastic buckling stress obtained by means of figure 2 to get the approximate buckling stress of a plate with simply supported loaded edges and clamped unloaded edges.

COMPARISON WITH OTHER THEORETICAL SOLUTIONS

Solutions of the problem of the compressive buckling of flat rectangular Metalite type sandwich plates with simply supported loaded edges and clamped unloaded edges, based on other sandwich-plate theories, are in existence (references 5 to 7). A comparison of the results of these theories for infinitely long clamped Metalite type sandwich plates with those of the present paper (fig. 2) is shown in figure 4. Appreciable spread occurs in the elastic-buckling-stress coefficients computed from the various theories. The maximum deviation of the elastic-buckling-stress coefficients of 15 percent to -15 percent of the results of the present paper occurs at a value of r of about 0.2. The discrepancies become less as the shear-flexibility parameter approaches zero or unity. The various theoretical results are discussed in more detail in the following paragraphs.

In reference 5, a potential-energy expression for bending and buckling of sandwich plates that includes the effect of bending of the faces about their own middle surface is derived. The assumption is made that any line in the sandwich core that is initially straight and normal to the middle surface of the plate will remain straight after deformation of the plate but will deviate from the direction of the normal to the

deformed middle surface by an amount that is proportional to the slope of the plate surface, this proportionality factor being constant throughout the plate. While this assumption leads to a rigorous solution for the compressive buckling of simply supported plates, it is not rigorously correct for other loadings and boundary conditions.

For the present problem, a stability criterion is obtained in reference 5 by means of an approximate deflection function. This stability criterion (equation (42) of reference 5) is, in the notation of the present paper,

$$k = \frac{\frac{16}{3}\left(\frac{\beta^2}{m^2} + \frac{3}{16}\frac{m^2}{\beta^2} + \frac{1}{2}\right)}{1 + \frac{\frac{16}{3}\left(\frac{\beta^2}{m^2} + \frac{3}{16}\frac{m^2}{\beta^2} + \frac{1}{2}\right)}{1 + \frac{4}{3}\frac{\beta^2}{m^2}} r} + \frac{16}{3}\left(\frac{\beta^2}{m^2} + \frac{3}{16}\frac{m^2}{\beta^2} + \frac{1}{2}\right)\frac{D_f}{D_o} \tag{2}$$

The first term in the right-hand side of equation (2) is the approximate elastic-buckling-stress coefficient that would be obtained if the faces were assumed to be membranes and is analogous to the present solution. The second term is the elastic-buckling-stress coefficient of the two faces alone.

For sandwich plates having relatively large ratios of core thickness to face thickness $\left(\frac{h_c}{t_f} > 10\right)$, the effect of the second term in the expression is very small, except for plates having low aspect ratios. For infinitely long sandwich plates the second term may be neglected because if the core-thickness - face-thickness ratio is greater than 10, elastic-buckling-stress coefficients for a given value of r and different values of D_f/D_o practically coincide. In figure 4, therefore, the results of reference 5 were obtained by minimizing equation (2) with respect to β/m while the term involving D_f/D_o was neglected.

The results of reference 5 with the bending stiffness of the faces about their own middle surface neglected differ by at most 15 percent from the results of the present paper. The elastic-buckling-stress coefficient for r equal to zero, which corresponds to the clamped isotropic plate, is about 4 percent higher than the exact value of 6.98 and the

value of r at which the wave length of the buckled plate vanishes is 3/4 rather than 1 as given by the present theory. Whether these discrepancies are due to the assumption of the theory of reference 5 or to the approximate deflection function used is impossible to ascertain without an exact solution of the equations of reference 5, but the fairly close agreement of the results of reference 5 and those of the present paper appears to indicate that the elastic-buckling-stress coefficients are relatively insensitive to the assumption of proportionality of shear-deformation angle and plate slope.

A method for simplified solution of Metalite type sandwich-plate buckling problems is developed in reference 6. The theory of the paper is largely based upon intuitive reasoning and involves the assumptions that the internal moments and shears in a sandwich plate are the same as those that would occur if the core had infinite shear stiffness and that the deflection of the plate is made up of two parts: a part due to stretching of the faces by the internal moments and the remainder due to shearing of the core by the internal shears. These two parts of the deflection surface are assumed also to have the same shape.

An approximate equation for the elastic-buckling-stress coefficient for the present problem can be obtained from the results of reference 6, in the notation of the present paper, as

$$k = \frac{5\left(\frac{\beta^2}{m^2} + \frac{1}{5}\frac{m^2}{\beta^2} + \frac{1}{2}\right)}{1 + \frac{5\left(\frac{\beta^2}{m^2} + \frac{1}{5}\frac{m^2}{\beta^2} + \frac{1}{2}\right)}{1 + \frac{\beta^2}{m^2}} r} + 5\left(\frac{\beta^2}{m^2} + \frac{1}{5}\frac{m^2}{\beta^2} + \frac{1}{2}\right)\frac{D_f}{D_o} \tag{3}$$

Equation (3) is identical in form with equation (2). The first term in the right-hand side is an approximate elastic-buckling-stress coefficient of sandwich plates with membrane faces and the second term shows the effect of stiffness of the faces in bending about their own middle surface. The effect of the second term in equation (3) is again very small, except for plates having low aspect ratios, and may be neglected for infinitely long plates when the ratio of core thickness to face thickness is greater than about 10. The results of reference 6 shown in figure 4 were obtained by minimizing equation (3) with respect to β/m while the term involving D_f/D_o was neglected.

The elastic-buckling-stress coefficients given by the theory of reference 6 are at most about 7 percent higher than those of the present paper. The two solutions coincide for r equal to zero and for r equal to or greater than unity. Thus, despite the nonrigorousness of the method of split rigidities, relatively accurate elastic-buckling-stress coefficients are obtained through its use.

A potential-energy expression more rigorous than that of reference 5 is developed in reference 8; however, in the derivation the sandwich core is implicitly assumed to be attached to the middle surface of the faces, an assumption which underestimates the core shear stiffness and results in values of elastic-buckling-stress coefficients that are lower than exact values. The calculus of variations is applied to the potential-energy expression to obtain differential equations and appropriate boundary conditions for the bending and buckling of sandwich plates. These differential equations are solved approximately in reference 7 to obtain upper and lower limits for the elastic-buckling-stress coefficients for the present problem and a chart is presented giving the arithmetic mean of these limits for infinitely long plates.

The parameters used in reference 7 are a buckling-stress coefficient C_{min}, a core shear-stiffness parameter R, and, in the notation of the present paper, the ratio of the core thickness to the face thickness h_c/t_f. The relationship between the first two parameters and those of the present paper are given by the following expressions:

$$C_{min} = \frac{k}{4\left(1 + \frac{D_f}{D_o}\right)} \tag{4a}$$

$$R = \frac{1}{2\,\frac{h_c}{t_f}\left(1 + \frac{t_f}{h_c}\right)^2\left(1 + \frac{D_f}{D_o}\right)r} \tag{4b}$$

The theory of reference 7 gives a different curve of elastic-buckling-stress coefficient k against core shear-flexibility parameter r for each value of the ratio of core thickness to face thickness h_c/t_f.

Curves for h_c/t_f equal to 10, 20, and 50 are shown. The curve for h_c/t_f equal to 10 deviates from the present results by a maximum of 15 percent and by about 7 percent for h_c/t_f equal to 20; whereas the points plotted for h_c/t_f equal to 50 coincide with the present results except in the region near r equal to zero.

A theory, which takes into account the bending stiffness of the faces about their own middle surface, would be expected to yield elastic-buckling-stress coefficients higher than those of the present paper, derived from the membrane theory of reference 1. The results of references 5 and 6 also indicate that curves of k against r for infinitely long clamped plates for core-thickness - face-thickness ratios greater than about 10 should practically coincide. The differences between the various curves obtained from reference 7 and between those curves and that of the present paper may therefore be attributed to the effect of underestimating the shear stiffness of the core by assuming it to be attached to the middle surface of the faces. If the core shear-stiffness parameter R of reference 7 is redefined by the expression

$$R = \frac{1}{2\,\frac{h_c}{t_f}\left(1 + \frac{D_f}{D_o}\right)r} \tag{5}$$

the replotted curves of reference 7 for h_c/t_f greater than about 10 would practically coincide with the present results. The redefinition of R by equation (5) is equivalent to taking into account the attachment of the core to the inner surface of the faces rather than to the middle surface of the faces as was assumed in references 7 and 8.

COMPARISON OF THEORY AND EXPERIMENT

In figures 5 and 6 experimental compressive buckling stresses for sandwich plates with simply supported loaded edges and clamped unloaded edges are compared with the buckling stresses computed from the results of the present paper. The experimental stresses are the results of Forest Products Laboratory tests (reference 9) made on Metalite type sandwich plates with alclad 24S-T aluminum-alloy faces and end-grain

balsa-wood or cellular-cellulose-acetate cores. Theoretical stresses in the plastic range are approximate and were obtained by the method described previously. The experimental and computed data are summarized in tables 2 and 3.

Poor agreement exists between theory and experiment for panels with end-grain balsa-wood cores, whereas the agreement between theory and experiment for panels with cellular-cellulose-acetate cores is good, as indicated by figures 5 and 6. For panels with end-grain balsa-wood cores the theoretical buckling stresses are an average of 26 percent higher than the experimental stresses, as is shown by the dashed line of figure 5. Individual discrepancies range from 12 percent to 45 percent. For panels with cellular-cellulose-acetate cores the theoretical buckling stresses are an average of 1 percent below the experimental buckling stresses with individual discrepancies ranging, however, from -17 percent to 27 percent.

CONCLUDING REMARKS

Charts have been presented to facilitate the determination of theoretical elastic-compressive-buckling loads of flat rectangular Metalite type sandwich plates with simply supported loaded edges and clamped unloaded edges. A correction for plasticity has been suggested.

A comparison has been made between the present theory and experimental results for two types of sandwich plates: plates with alclad 24S-T aluminum-alloy faces and end-grain balsa-wood or cellular-cellulose-acetate cores. Better agreement is found between theoretical and experimental buckling stresses of sandwich plates having cellular-cellulose-acetate cores than of sandwich plates having end-grain balsa-wood cores.

Langley Aeronautical Laboratory
National Advisory Committee for Aeronautics
Langley Field, Va., September 6, 1951

APPENDIX

DERIVATION OF COMPRESSIVE BUCKLING CRITERION FOR FLAT RECTANGULAR METALITE TYPE SANDWICH PLATES WITH SIMPLY SUPPORTED LOADED EDGES AND CLAMPED UNLOADED EDGES

Differential equations.- Differential equations for sandwich plates that may be used to derive the buckling criterion are given in reference 1. Seven physical constants (two Poisson's ratios, two flexural stiffnesses, a twisting stiffness, and two shear stiffnesses), which must be specified, are given by

$$\left.\begin{aligned} \mu_x &= \mu_y = \mu_f \\ D_x &= D_y = \left(1 + \mu_f\right)D_{xy} = \frac{1}{2} E_f t_f\left(h_c + t_f\right)^2 \\ D_{Q_x} &= D_{Q_y} = G_c h_c\left(1 + \frac{t_f}{h_c}\right)^2 \end{aligned}\right\} \tag{A1}$$

These physical constants are identical with those given in reference 2, with the exception of the expression for D_{Q_x} and D_{Q_y} which has been changed as suggested by Bijlaard in reference 10. The assumption upon which the expression in reference 2 for D_{Q_x} and D_{Q_y} was based, that the sandwich core carries all the vertical shear forces, causes the core shearing stiffness to be underestimated.

For a Metalite type sandwich plate compressed in the x-direction, the equations of reference 1 are then

$$\left.\begin{aligned}
&\frac{N_x}{D_o}\frac{D_o}{D_Q}\frac{\partial^2 w}{\partial x^2} - \frac{\partial}{\partial x}\frac{Q_x}{D_Q} - \frac{\partial}{\partial y}\frac{Q_y}{D_Q} = 0 \\
&\frac{\partial}{\partial y}\left(\frac{\partial^2}{\partial x^2} + \frac{\partial^2}{\partial y^2}\right)w - \frac{1 + \mu_f}{2}\frac{\partial^2}{\partial x\,\partial y}\frac{Q_x}{D_Q} - \left(\frac{1 - \mu_f}{2}\frac{\partial^2}{\partial x^2} + \frac{\partial^2}{\partial y^2} - \frac{D_Q}{D_o}\right)\frac{Q_y}{D_Q} = 0 \\
&\frac{\partial}{\partial x}\left(\frac{\partial}{\partial x^2} + \frac{\partial^2}{\partial y^2}\right)w - \left(\frac{1 - \mu_f}{2}\frac{\partial^2}{\partial y^2} + \frac{\partial^2}{\partial x^2} - \frac{D_Q}{D_o}\right)\frac{Q_x}{D_Q} - \frac{1 + \mu_f}{2}\frac{\partial^2}{\partial x\,\partial y}\frac{Q_y}{D_Q} = 0
\end{aligned}\right\} \quad \text{(A2)}$$

Boundary conditions.- The boundary conditions that are to be satisfied by the functions chosen for the middle-surface deflection w and the shear angles Q_x/D_Q and Q_y/D_Q are that no middle-surface deflection occurs at the plate edges, that no point in the boundary is permitted to move parallel to the edges, that no bending moment exists along the simply supported edges, and that along the clamped edges the sections making up the boundary do not rotate. (See reference 1, pp. 8-9.) These conditions are given by the following equations:

At $x = 0, a$

$$w = M_x = \frac{Q_y}{D_Q} = 0 \qquad \text{(A3a)}$$

and at $y = \pm \frac{b}{2}$

$$w = \frac{Q_x}{D_Q} = \frac{\partial w}{\partial y} - \frac{Q_y}{D_Q} = 0 \qquad \text{(A3b)}$$

The bending moment M_x is given by equation (12a) of reference 1 as

$$M_x = -D_o\left[\frac{\partial}{\partial x}\left(\frac{\partial w}{\partial x} - \frac{Q_x}{D_Q}\right) + \mu_f \frac{\partial}{\partial y}\left(\frac{\partial w}{\partial y} - \frac{Q_y}{D_Q}\right)\right] \tag{A4}$$

Solution of differential equation.- Solutions for the middle-surface deflection w and the shear angles Q_x/D_Q and Q_y/D_Q exist in the form

$$\left.\begin{aligned} w &= \sin\frac{m\pi x}{a}\sum_i A_i \cosh\frac{\pi N_i y}{b} \\ \frac{Q_x}{D_Q} &= \cos\frac{m\pi x}{a}\sum_i B_i \cosh\frac{\pi N_i y}{b} \\ \frac{Q_y}{D_Q} &= \sin\frac{m\pi x}{a}\sum_i C_i \sinh\frac{\pi N_i y}{b} \end{aligned}\right\} \tag{A5}$$

where m is an integer indicating the number of sinusoidal half-waves in the x-direction and values of N_i and the coefficients A_i, B_i, and C_i are to be determined. Equations (A5) satisfy the boundary conditions (A3a).

Substitution of equations (A5) into equations (A2) yields, after simplification, the following set of simultaneous equations which applies for each set of values of A_i, B_i, C_i, and N_i:

$$krA_i - \frac{a}{m\pi}B_i + N_i\frac{\beta}{m}\frac{a}{m\pi}C_i = 0 \tag{A6a}$$

$$N_i \frac{\beta}{m}\left[\left(N_i \frac{\beta}{m}\right)^2 - 1\right]A_i + \frac{1 + \mu_f}{2} N_i \frac{\beta}{m} \frac{a}{m\pi} B_i + \left[\left(\frac{\beta}{m}\right)^2 \frac{1}{r} + \right.$$

$$\left. \frac{1 - \mu_f}{2} - \left(N_i \frac{\beta}{m}\right)^2\right]\frac{a}{m\pi} C_i = 0 \tag{A6b}$$

$$\left[\left(N_i \frac{\beta}{m}\right)^2 - 1\right]A_i + \left[\left(\frac{\beta}{m}\right)^2 \frac{1}{r} + 1 - \frac{1 - \mu_f}{2}\left(N_i \frac{\beta}{m}\right)^2\right]\frac{a}{m\pi} B_i -$$

$$\frac{1 + \mu_f}{2} N_i \frac{\beta}{m} \frac{a}{m\pi} C_i = 0 \tag{A6c}$$

Three values of N_i, for which equations (A5) satisfy the differential equations (A1), are obtained by setting the determinant of the coefficients of equations (A6) equal to zero:

$$\left.\begin{aligned}
N_1 &= \sqrt{\frac{2}{(1 - \mu_f)r} + \left(\frac{m}{\beta}\right)^2} \\
N_2 &= \frac{m}{\beta}\sqrt{1 - \frac{kr}{2} + \sqrt{k\left(\frac{\beta}{m}\right)^2 + \left(\frac{kr}{2}\right)^2}} \\
N_3 &= \frac{m}{\beta}\sqrt{1 - \frac{kr}{2} - \sqrt{k\left(\frac{\beta}{m}\right)^2 + \left(\frac{kr}{2}\right)^2}}
\end{aligned}\right\} \tag{A7}$$

Expressions for the coefficients A_i and C_i in terms of B_i are found by solving equations (A6a) and (A6b). This procedure gives

$$\left.\begin{aligned}
A_1 &= 0 \\
A_2 &= \phi \frac{a}{m\pi} B_2 \\
A_3 &= (1 - \phi)\frac{a}{m\pi} B_3 \\
C_1 &= \frac{1}{N_1 \frac{\beta}{m}} B_1 \\
C_2 &= N_2 \frac{\beta}{m} B_2 \\
C_3 &= N_3 \frac{\beta}{m} B_3
\end{aligned}\right\} \tag{A8}$$

where

$$\phi = \frac{\frac{1 - \mu_f}{2}\left[\sqrt{1 + \frac{4}{kr^2}\left(\frac{\beta}{m}\right)^2} - 1\right] - \frac{2}{kr^2}\left(\frac{\beta}{m}\right)^2}{\mu_f + \sqrt{1 + \frac{4}{kr^2}\left(\frac{\beta}{m}\right)^2}}$$

Equations (A5) may then be written as

$$\left.\begin{aligned}
w &= \left[\phi B_2 \cosh \frac{\pi N_2 y}{b} + (1 - \phi) B_3 \cosh \frac{\pi N_3 y}{b}\right] \frac{a}{m\pi} \sin \frac{m\pi x}{a} \\
\frac{Q_x}{D_Q} &= \left(B_1 \cosh \frac{\pi N_1 y}{b} + B_2 \cosh \frac{\pi N_2 y}{b} + B_3 \cosh \frac{\pi N_3 y}{b}\right) \cos \frac{m\pi x}{a} \\
\frac{Q_y}{D_Q} &= \left(\frac{1}{N_1 \frac{\beta}{m}} B_1 \sinh \frac{\pi N_1 y}{b} + N_2 \frac{\beta}{m} B_2 \sinh \frac{\pi N_2 y}{b} + \right. \\
&\qquad \left. N_3 \frac{\beta}{m} B_3 \sinh \frac{\pi N_3 y}{b}\right) \sin \frac{m\pi x}{a}
\end{aligned}\right\} \quad \text{(A9)}$$

The coefficients B_1, B_2, and B_3 must be adjusted so as to make equations (A9) satisfy boundary conditions (A3b). Substitution of equations (A9) into equations (A3b) gives the following set of simultaneous equations:

$$\left.\begin{aligned}
B_2 \phi \cosh \frac{\pi N_2}{2} + B_3 (1 - \phi) \cosh \frac{\pi N_3}{2} &= 0 \\
B_1 \cosh \frac{\pi N_1}{2} + B_2 \cosh \frac{\pi N_2}{2} + B_3 \cosh \frac{\pi N_3}{2} &= 0 \\
B_1 \frac{\sinh \frac{\pi N_1}{2}}{N_1 \frac{\beta}{m}} + B_2 (1 - \phi) N_2 \frac{\beta}{m} \sinh \frac{\pi N_2}{2} + B_3 \phi N_3 \frac{\beta}{m} \sinh \frac{\pi N_3}{2} &= 0
\end{aligned}\right\} \quad \text{(A10)}$$

The condition that B_1, B_2, and B_3 have values other than zero determines the criterion for stability under compression of flat rectangular Metalite type sandwich plates with simply supported loaded edges and clamped unloaded edges. The stability criterion, obtained by setting the determinant of the coefficients of equations (A10) equal to zero, is

$$\frac{\left(\frac{\pi m}{\beta}\right)^2}{\sqrt{1 + \frac{4}{kr^2}\left(\frac{\beta}{m}\right)^2}} \frac{\tanh \frac{\pi N_1}{2}}{\frac{\pi N_1}{2}} - \left[1 + \frac{1}{\sqrt{1 + \frac{4}{kr^2}\left(\frac{\beta}{m}\right)^2}}\right]^2 \frac{\pi N_2}{2} \tanh \frac{\pi N_2}{2} +$$

$$\left[1 - \frac{1}{\sqrt{1 + \frac{4}{kr^2}\left(\frac{\beta}{m}\right)^2}}\right]^2 \frac{\pi N_3}{2} \tanh \frac{\pi N_3}{2} = 0 \tag{A11}$$

When the plate shear stiffness is infinite ($r = 0$), equation (A11) reduces to the stability criterion for isotropic plates with deflections due to shear neglected:

$$\frac{\pi}{2}\frac{m}{\beta}\sqrt{\sqrt{k\left(\frac{\beta}{m}\right)^2} + 1} \tanh \frac{\pi}{2}\frac{m}{\beta}\sqrt{\sqrt{k\left(\frac{\beta}{m}\right)^2} + 1} +$$

$$\frac{\pi}{2}\frac{m}{\beta}\sqrt{\sqrt{k\left(\frac{\beta}{m}\right)^2} - 1} \tan \frac{\pi}{2}\frac{m}{\beta}\sqrt{\sqrt{k\left(\frac{\beta}{m}\right)^2} - 1} = 0 \tag{A12}$$

REFERENCES

1. Libove, Charles, and Batdorf, S. B.: A General Small-Deflection Theory for Flat Sandwich Plates. NACA Rep. 899, 1948. (Formerly NACA TN 1526.)

2. Seide, Paul, and Stowell, Elbridge Z.: Elastic and Plastic Buckling of Simply Supported Solid-Core Sandwich Plates in Compression. NACA Rep. 967, 1950. (Formerly NACA TN 1822.)

3. Stowell, Elbridge Z.: A Unified Theory of Plastic Buckling of Columns and Plates. NACA Rep. 898, 1948. (Formerly NACA TN 1556.)

4. Stowell, Elbridge Z.: Critical Shear Stress of an Infinitely Long Plate in the Plastic Region. NACA TN 1681, 1948.

5. March, H. W.: Effects of Shear Deformation in the Core of a Flat Rectangular Sandwich Panel. Rep. No. 1583, Forest Products Lab., U.S. Dept. Agric., May 1948.

6. Bijlaard, P. P.: Analysis of the Elastic and Plastic Stability of Sandwich Plates by the Method of Split Rigidities - I. Jour. Aero. Sci., vol. 18, no. 5, May 1951, pp. 339-349.

7. Yen, Kuo Tai, Salerno, V. L., and Hoff, N. J.: Buckling of Rectangular Sandwich Plates Subjected to Edgewise Compression with Loaded Edges Simply Supported and Unloaded Edges Clamped. NACA TN 2556, 1952.

8. Hoff, N. J.: Bending and Buckling of Rectangular Sandwich Plates. NACA TN 2225, 1950.

9. Boller, K. H.: Buckling Loads of Flat Sandwich Panels in Compression. Buckling of Flat Sandwich Panels with Loaded Edges Simply Supported and the Remaining Edges Clamped. Rep. No. 1525-B, Forest Products Lab., U.S. Dept. Agric., Sept. 1947.

10. Bijlaard, P. P.: Stability of Sandwich Plates. Jour. Aero. Sci. (Readers' Forum), vol. 16, no. 9, Sept. 1949, pp. 573-574.

11. Timoshenko, S.: Theory of Elastic Stability. McGraw-Hill Book Co., Inc., 1936, p. 345.

TABLE 1

COMPRESSIVE BUCKLING-STRESS COEFFICIENTS k FOR METALITE TYPE SANDWICH PLATES WITH SIMPLY SUPPORTED LOADED EDGES AND CLAMPED UNLOADED EDGES

$$\left[\mu_f = \frac{1}{3}\right]$$

$\frac{\beta}{m}$ \ r	0 (a)	0.025	0.06	0.10	0.15	0.25	0.40	0.60	1.00
0	∞	40.00	16.67	10.00	6.67	4.00	2.50	1.67	1.00
.1	----	-----	-----	9.19	6.32	3.89	2.46	1.66	1.00
.2	----	-----	10.59	7.53	5.53	3.61	2.37	1.63	1.00
.3	----	10.44	7.78	6.05	4.73	3.29	2.27	1.60	1.01
.4	9.44	7.72	6.19	5.07	4.15	3.05	2.18	1.58	1.02
.5	7.69	6.51	5.41	4.56	3.82	2.91	2.15	1.59	1.06
.6	7.05	6.06	5.12	4.38	3.71	2.88	2.17	1.64	1.13
.7	7.00	6.06	5.15	4.43	3.79	2.96	2.25	1.71	1.17
.8	7.29	6.36	5.42	4.61	3.99	3.14	2.39	1.84	1.25
.9	7.83	6.85	5.86	5.05	4.34	3.40	2.59	1.98	1.37
1.0	----	7.52	6.43	5.55	4.75	3.72	2.86	2.16	1.49

(a) Values of k taken from reference 11.

TABLE 2

EXPERIMENTAL AND COMPUTED DATA FOR SANDWICH PLATES WITH ALCLAD 24S-T

ALUMINUM-ALLOY FACES AND END-GRAIN BALSA-WOOD CORES

$\left[E_f = 9.9 \times 10^6 \text{ psi}; G_c = 19{,}000 \text{ psi}\right]$

t_f (in.)	h_c (in.)	a (in.)	b (in.)	a/b	r	k	$N_{x_{comp}}$ (lb/in.)	$\sigma_{cr_{comp}}$ (ksi)	$N_{x_{comp}}$ (lb/in.) (a)	$\sigma_{cr_{comp}}$ (ksi) (a)	$N_{x_{exp}}$ (lb/in.)	$\sigma_{cr_{exp}}$ (ksi)	Error (percent)
0.012	0.255	33.02	39.95	0.827	0.006	7.20	212	8.8	---	----	165	6.9	28.6
.013	.257	33.03	39.88	.828	.006	7.17	235	9.0	---	----	176	6.8	33.5
.013	.251	33.02	39.98	.826	.006	7.18	224	8.6	---	----	164	6.3	36.5
.012	.252	33.02	39.90	.828	.006	7.20	210	8.8	---	----	165	6.9	27.3
.012	.255	23.02	35.95	.640	.007	6.66	242	10.1	---	----	217	9.0	11.7
.012	.259	23.03	35.82	.643	.007	6.66	251	10.5	---	----	181	7.5	38.7
.012	.251	23.02	35.90	.641	.007	6.66	236	9.8	---	----	205	8.5	15.0
.013	.251	23.03	35.94	.641	.007	6.65	256	9.8	---	----	205	7.9	24.7
.011	.259	19.03	28.83	.660	.010	6.52	346	15.7	---	----	275	12.5	25.7
.012	.249	19.02	28.81	.660	.010	6.52	353	14.7	---	----	304	12.7	16.1
.012	.244	19.01	28.80	.660	.010	6.52	340	14.2	---	----	290	12.1	17.2
.011	.252	19.01	28.82	.660	.010	6.52	328	14.9	---	----	275	12.5	19.4
.014	.246	16.01	23.83	.672	.018	6.26	574	20.5	---	----	457	16.3	25.5
.012	.251	16.02	23.84	.672	.015	6.32	507	21.1	---	----	423	17.6	20.0
.013	.246	16.02	23.84	.672	.016	6.28	530	20.4	---	----	423	16.3	25.2
.011	.251	16.02	23.84	.672	.014	6.36	465	21.1	---	----	406	18.5	14.4
.013	.255	14.03	20.82	.674	.022	6.10	722	27.8	712	27.4	584	22.5	22.0
.013	.249	14.04	20.89	.672	.022	6.12	688	26.5	684	26.3	528	20.3	29.5
.011	.257	14.00	20.80	.673	.019	6.20	623	28.3	612	27.8	544	24.7	12.4
.013	.251	14.03	20.94	.670	.022	6.12	695	26.7	692	26.6	528	20.3	31.0
.013	.253	12.02	18.98	.633	.026	5.97	838	32.2	793	30.5	632	24.3	25.5
.013	.252	12.02	18.87	.637	.027	5.97	841	32.4	793	30.5	571	22.0	38.9
.013	.247	12.02	18.95	.634	.026	5.97	805	30.9	770	29.6	571	22.0	34.8
.014	.248	12.02	18.90	.634	.028	5.92	862	30.8	826	29.5	571	20.4	44.7
.013	.248	11.02	16.87	.653	.033	5.78	989	38.0	871	33.5	667	25.7	30.6
.013	.253	11.01	16.88	.652	.033	5.75	1021	39.3	884	34.0	711	27.4	24.3
.014	.250	11.01	16.94	.650	.035	5.70	1066	38.1	938	33.5	667	23.8	40.6
.013	.253	11.00	16.98	.648	.033	5.77	1012	38.9	881	33.9	711	27.4	23.9

(a) Corrected for plasticity.

TABLE 3

EXPERIMENTAL AND COMPUTED DATA FOR SANDWICH PLATES WITH ALCLAD 24S-T ALUMINUM-ALLOY FACES AND CELLULAR-CELLULOSE-ACETATE CORES

$\left[E_f = 9.9 \times 10^6 \text{ psi}; G_c = 3{,}500 \text{ psi}\right]$

t_f (in.)	h_c (in.)	a (in.)	b (in.)	a/b	r	k	$N_{x_{comp}}$ (lb/in.)	$\sigma_{cr_{comp}}$ (ksi)	$N_{x_{exp}}$ (lb/in.)	$\sigma_{cr_{exp}}$ (ksi)	Error (percent)
0.012	0.247	33.00	39.82	0.829	0.029	6.36	178	7.4	167	7.0	6.3
.013	.247	33.04	39.82	.830	.032	6.32	193	7.4	167	6.4	15.3
.012	.248	33.03	39.88	.828	.029	6.36	178	7.4	140	5.8	27.4
.013	.246	32.44	39.86	.813	.032	6.22	188	7.2	176	6.8	6.6
.012	.249	23.02	35.88	.641	.036	5.68	198	8.3	212	8.8	-6.5
.012	.249	23.01	35.84	.642	.037	5.68	199	8.3	222	9.3	-10.5
.012	.246	23.02	35.88	.641	.036	5.68	194	8.1	212	8.8	-8.4
.013	.243	23.02	35.98	.639	.038	5.62	203	7.8	193	7.4	5.3
.013	.244	19.00	28.82	.659	.060	5.08	289	11.1	348	13.4	-17.0
.013	.245	19.02	28.85	.659	.060	5.08	290	11.2	301	11.6	-3.6
.013	.248	19.01	28.85	.658	.061	5.06	296	11.4	301	11.6	-1.7
.013	.247	19.01	28.85	.658	.061	5.06	294	11.3	301	11.6	-2.4
.013	.243	16.02	23.84	.671	.087	4.57	377	14.5	379	14.6	-.6
.013	.241	16.00	23.84	.671	.087	4.57	372	14.3	379	14.6	-2.0
.013	.238	16.00	23.84	.671	.086	4.60	364	14.0	406	15.6	-10.2
.013	.245	16.00	23.85	.670	.088	4.56	381	14.7	447	17.2	-14.7
.014	.250	14.01	21.13	.663	.123	4.05	487	17.4	503	18.0	-3.3
.014	.257	14.00	20.80	.673	.131	3.95	516	18.4	558	19.9	-7.5
.013	.256	14.00	20.88	.670	.120	4.10	486	18.7	483	18.6	.7
.013	.254	12.01	18.88	.636	.146	3.77	539	20.7	554	21.3	-2.7
.012	.253	12.01	18.83	.638	.135	3.91	511	21.3	571	23.8	-10.5
.013	.251	12.02	18.87	.637	.144	3.79	530	20.4	473	18.2	12.1
.013	.251	12.01	18.93	.635	.143	3.80	528	20.3	522	20.1	1.2
.014	.249	10.99	16.57	.663	.199	3.17	615	22.0	618	22.1	-.5

NACA

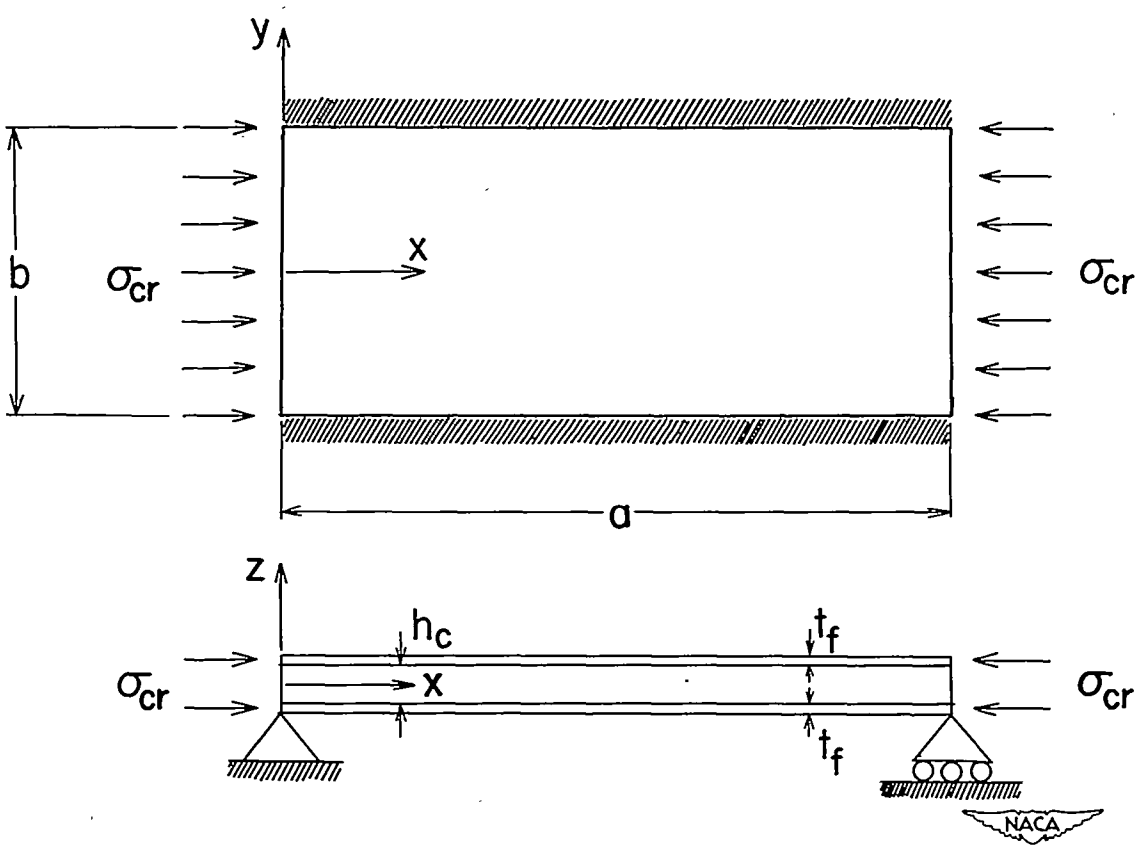

Figure 1.- Metalite type sandwich plate with simply supported loaded edges and clamped unloaded edges.

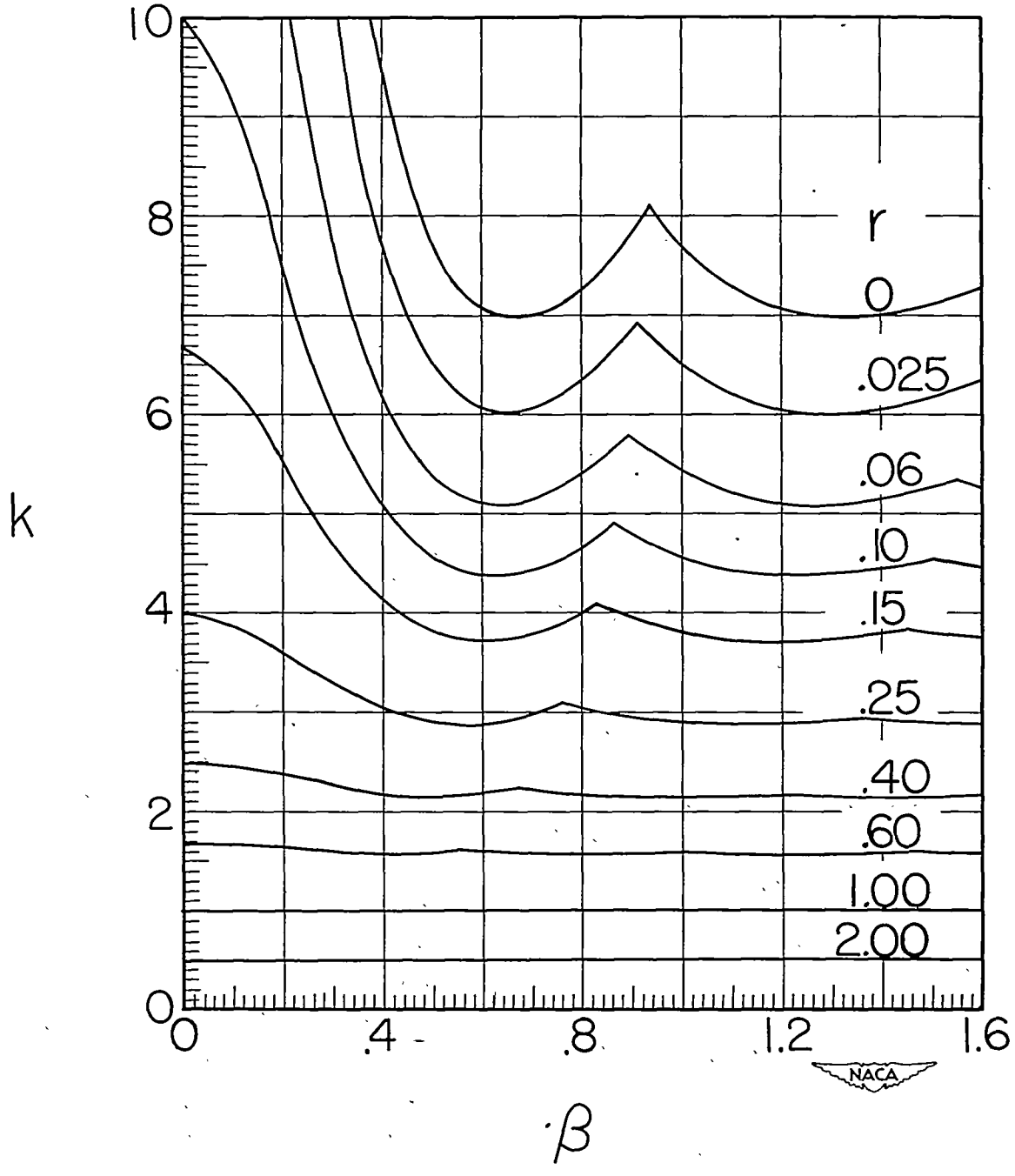

Figure 2.- Elastic buckling-stress coefficients for Metalite type sandwich plates with simply supported loaded edges and clamped unloaded edges.

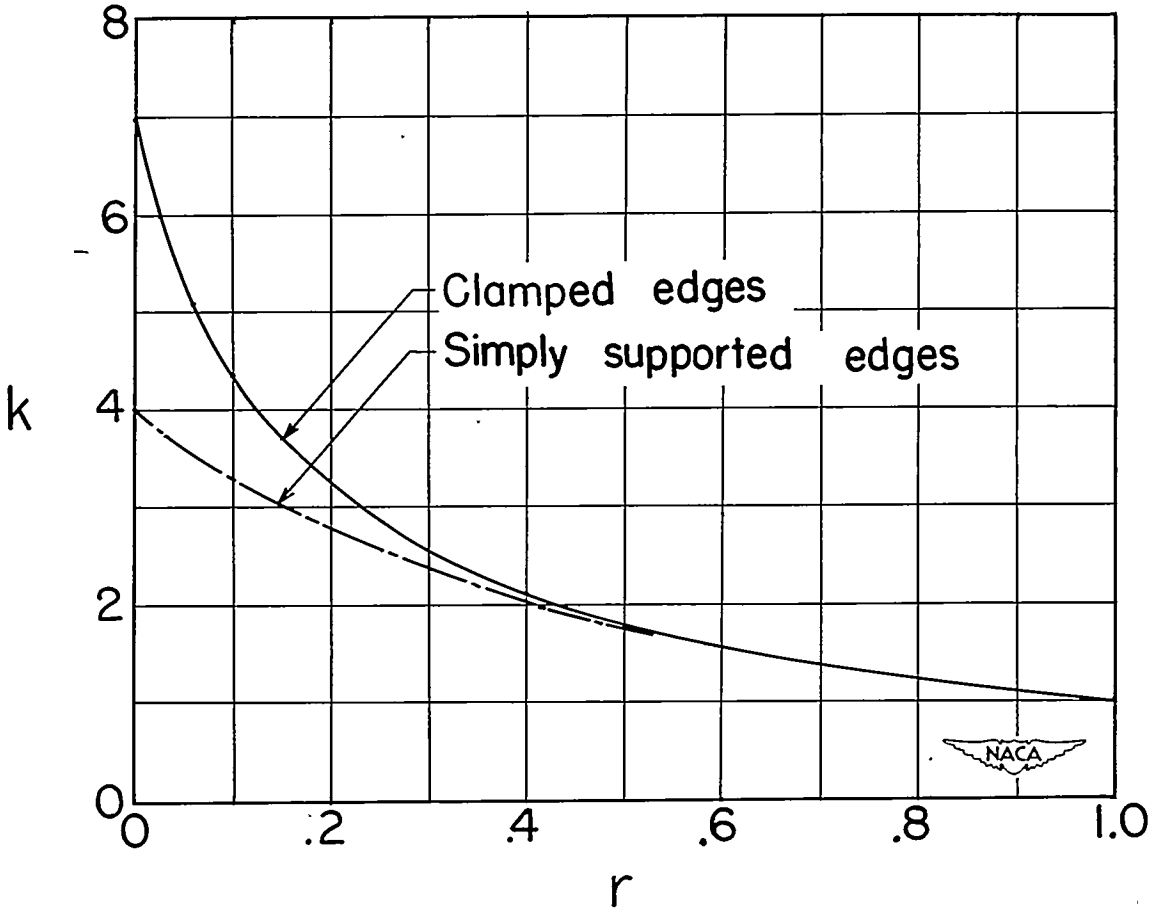

Figure 3.- Comparison of elastic-buckling-stress coefficients for infinitely long Metalite type sandwich plates with clamped edges and with simply supported edges.

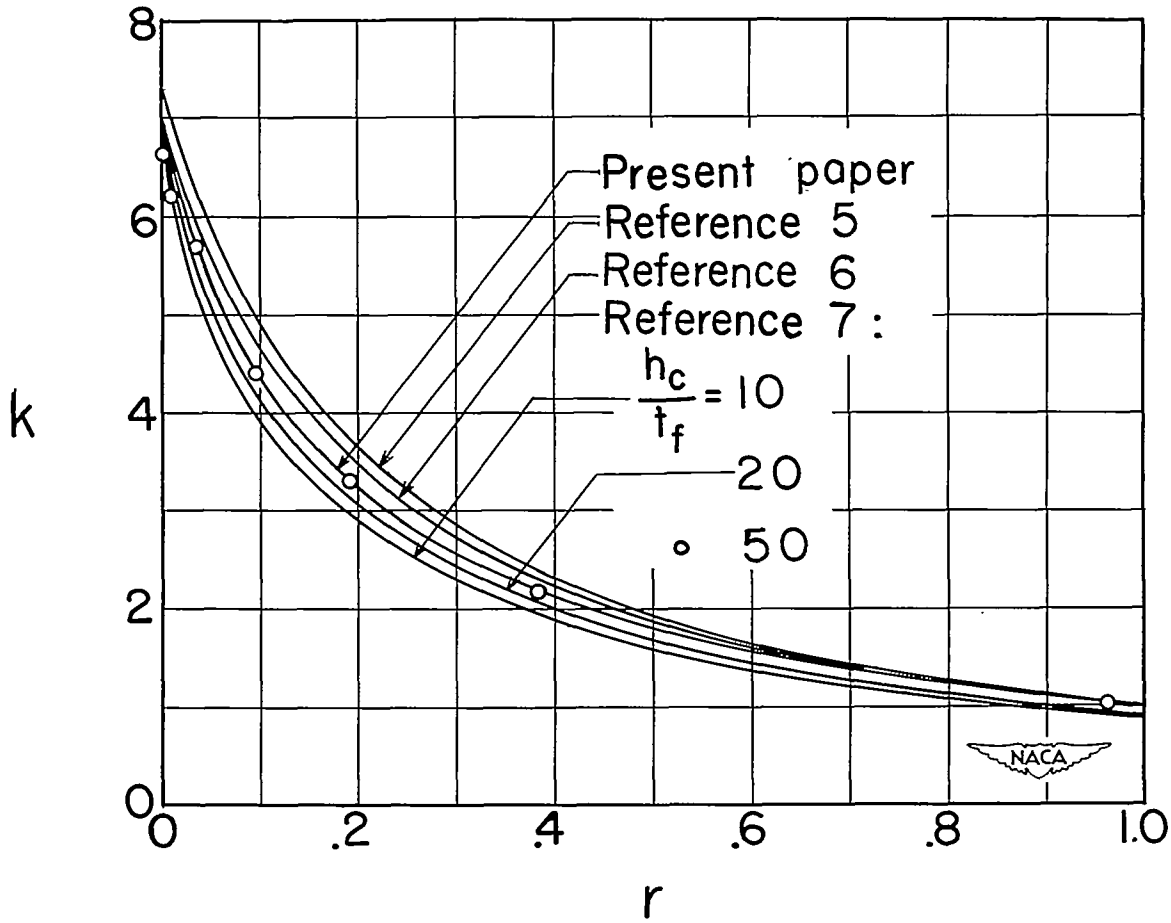

Figure 4.- Comparisons of various theoretical solutions of the compressive buckling of infinitely long Metalite type sandwich plates with clamped edges.

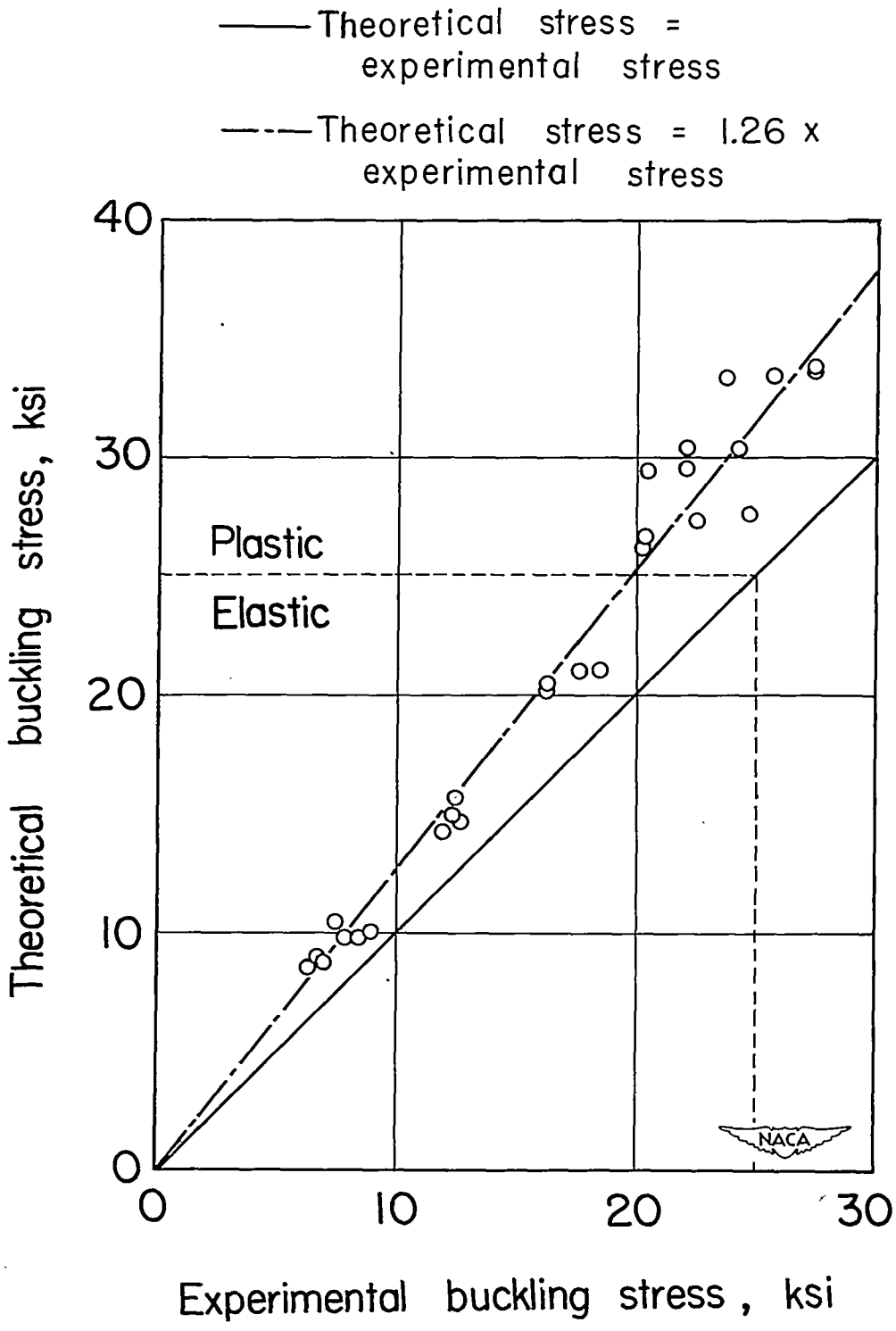

Figure 5.- Comparison of theoretical and experimental buckling stresses for sandwich plates with alclad 24S-T aluminum-alloy faces and end-grain balsa-wood cores.

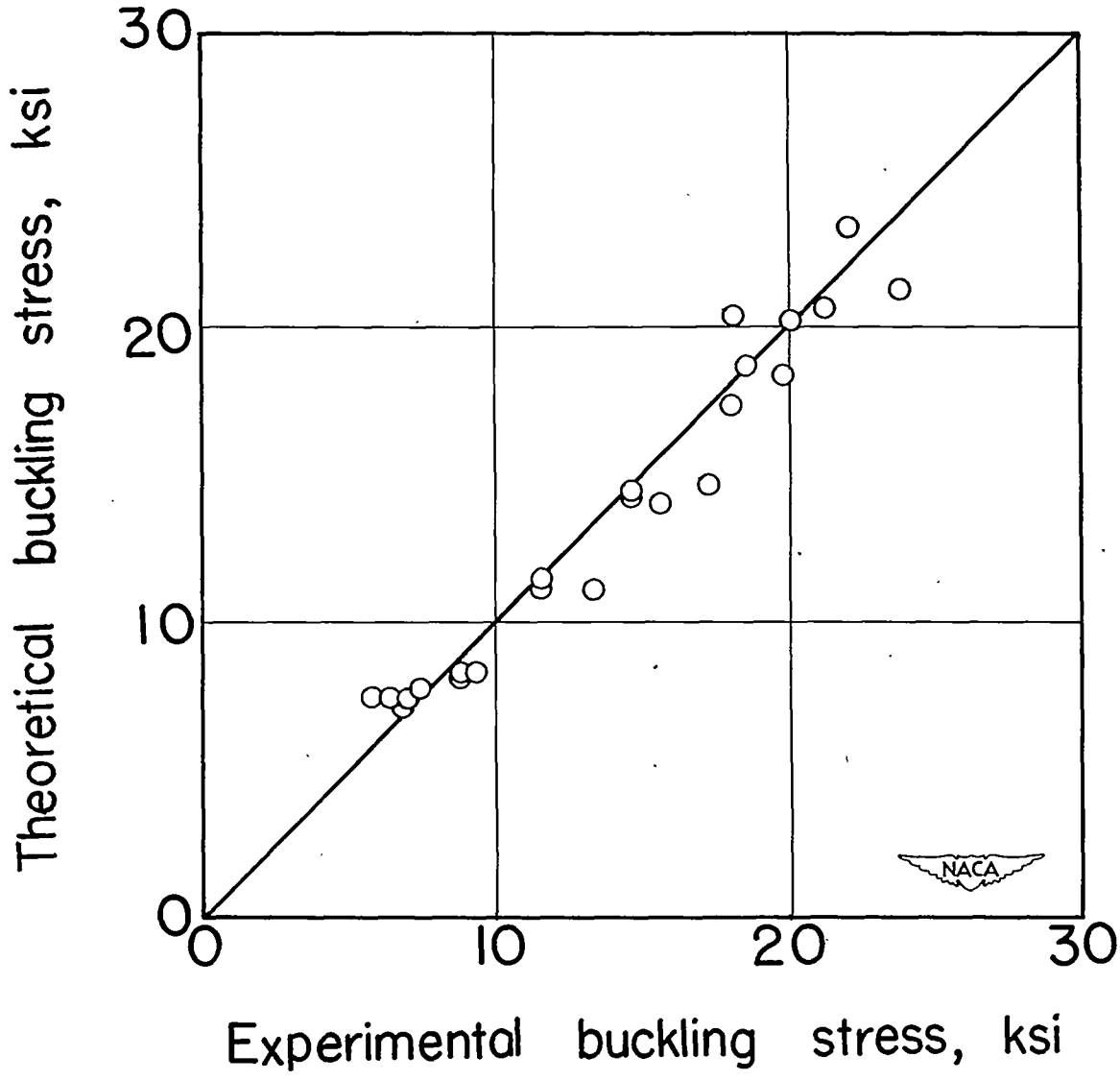

Figure 6.- Comparison of theoretical and experimental buckling stresses for sandwich plates with alclad 24S-T aluminum-alloy faces and cellular-cellulose-acetate cores.

NACA-Langley - 2-27-52 -1000