3014
NACA TN 2641

TECH LIBRARY KAFB, NM
0065645

NATIONAL ADVISORY COMMITTEE FOR AERONAUTICS

TECHNICAL NOTE 2641

A VECTOR STUDY OF LINEARIZED SUPERSONIC FLOW APPLICATIONS TO NONPLANAR PROBLEMS

By John C. Martin

Langley Aeronautical Laboratory
Langley Field, Va.

Washington
June 1952

AFMDC
TECHNICAL LIBRARY
AFL 2811

TECH LIBRARY KAFB, NM

0065645

1Y

NATIONAL ADVISORY COMMITTEE FOR AERONAUTICS

TECHNICAL NOTE 2641

A VECTOR STUDY OF LINEARIZED SUPERSONIC FLOW

APPLICATIONS TO NONPLANAR PROBLEMS

By John C. Martin

SUMMARY

A vector study of the partial-differential equation of steady linearized supersonic flow is presented. General expressions, which relate the velocity potential in the stream to the conditions on the disturbing surfaces, are derived. In connection with these general expressions the concept of the finite part of an integral is discussed.

A discussion of problems dealing with planar bodies is given and the conditions for the solution to be unique are investigated.

Problems concerning nonplanar systems are investigated, and methods are derived for the solution of some simple nonplanar bodies. The surface pressure distribution and the damping in roll are found for rolling tails consisting of four, six, and eight rectangular fins for the Mach number range where the region of interference between adjacent fins does not affect the fin tips.

INTRODUCTION

In the presentation of the theory of the flow of an idealized incompressible fluid, vector methods can be used to reduce greatly the mathematical manipulations involved. The study of steady linearized supersonic flow may also be aided by the use of vector methods. Two types of approaches, however, can be used. Perhaps the more obvious is to make use of common vector methods as was done in reference 1. The other vector method, which was introduced by Robinson in reference 2 and is used in this paper, appears to be more suited to the study of the linearized partial-differential equation of steady supersonic flow. This method allows a derivation of a hyperbolic scalar potential and a hyperbolic vector potential along lines analogous to the derivation sometimes used (reference 3, ch. VIII) in dealing with common scalar and vector potentials.

The present paper presents a vector derivation of many general results which have been found by various methods and are given in the published literature on the linearized partial-differential equation of supersonic flow and also presents some results which are not found in the literature. The general results of Hadamard (reference 4, p. 207), Puckett (reference 5), and Heaslet and Lomax (reference 6) are found as special cases of a general expression for a scalar potential, and the results found by Robinson (reference 2) are obtained by the use of a vector potential. The derivation of the scalar potential doubtlessly helps to clarify the concept of the finite part of an integral.

A discussion of problems dealing with planar bodies immersed in a supersonic flow is given, and the conditions necessary for the solution to be unique are investigated.

Problems dealing with nonplanar systems are also discussed, and methods are derived for the solution of some simple problems dealing with nonplanar bodies. The surface pressure distribution, the spanwise loading, and the damping in roll are found for rolling tails consisting of four, six, and eight rectangular fins for the Mach number range where the region of interference between adjacent fins does not effect the fin tips.

SYMBOLS

$\overline{A}$	hyperbolic vector potential
A	aspect ratio of tail fin
a	positive constant
C_1,C_2,C_3	arbitrary constants
c	chord
$\overline{E},\overline{F}$	arbitrary vector functions
f	scalar function defined by equation (19)
$\overline{G}$	vector function associated with vector function $\overline{F}$
$\overline{H}$	vorticity vector
$b/2$	span of tail fin

i,j,k	unit vectors in x-, y-, and z-directions, respectively
M	Mach number
$\bar{n}$	unit vector normal to element of area da
$\bar{n}_h = -i\beta^2\nu_1 + j\nu_2 + k\nu_3$	
$\bar{n}_h' = -i\beta^2\nu_1' + j\nu_2' + k\nu_3'$	
$\bar{n}_h^* = -i\beta^2\nu_1^* + j\nu_2^* + k\nu_3^*$	
ΔC_p	pressure-difference coefficient
p	rate of roll
Q	function used in equation of surface of discontinuity
$\bar{q}$	part of velocity vector which is made up of hyperbolic curl of vector potential
$\bar{q}'$	total perturbation velocity
$R = \sqrt{(x - \xi)^2 - \beta^2(y - \eta)^2 - \beta^2(z - \zeta)^2}$	
R'	small constant
$r = \sqrt{(x - \xi)^2 + \beta^4(y - \eta)^2 + \beta^4(z - \zeta)^2}$	
S	area of tail fin
S_0	surface of discontinuity
$S_1,S_2,S_3,S_4,$ S_5,S_6,T,T'	surfaces of integration
V	free-stream velocity
v_0,v_1,v_2	volumes of integration
$\bar{W} = \frac{1}{R}\nabla\phi - \phi\nabla\frac{1}{R}$	
x,y,z	Cartesian coordinates (x-axis parallel to free-stream direction)

$\beta = \sqrt{M^2 - 1}$

Γ spanwise circulation $\left(2\int_{L.E.}^{T.E.} \phi_x \, dx = \frac{V}{2}\int_{L.E.}^{T.E.} \Delta C_p \, dx\right)$

ϵ small positive quantity

ξ, η, ζ Cartesian coordinates (ξ-axis parallel to free-stream direction)

θ, ρ polar coordinates

Λ, ψ scalar functions

λ given volume

ν_1, ν_2, ν_3 direction cosines of outward normal to element of area da

ν_1', ν_2', ν_3' direction cosines of normal (directed away from point (x,y,z)) to surface S_0

$\nu_1^*, \nu_2^*, \nu_3^*$ direction cosines of normal to element of area da used in equation (45)

σ slope of deflected area

τ area of integration

$\phi, \phi_0, \phi_1, \phi_2, \psi_0$ scalar potentials

C_l rolling-moment coefficient per fin $\left(\frac{\text{Rolling moment per fin}}{\frac{1}{2}\rho V^2 S \frac{b}{2}}\right)$

$$C_{l_p} = \left[\frac{\partial C_l}{\partial \frac{p(b/2)}{V}}\right]_{p \to 0}$$

$\oint$ indicates integration over closed line or surface

$\int^f$ denotes finite part of integral

THEORY

This paper deals with the linearized partial-differential equation of steady supersonic flow. This equation is given by

$$-\beta^2\phi_{xx} + \phi_{yy} + \phi_{zz} = 0 \tag{1}$$

The potential is assumed to be continuous in the stream direction, and the potential is assumed to be always finite. Assuming the potential to be finite and continuous in the stream direction has the effect of requiring the aerodynamic lift and moment (calculated by use of the linearized pressure) of finite bodies to be finite since the linearized pressure is related to the derivative of the potential in the stream direction. The expression "linearized pressure" refers to the pressure obtained by neglecting all powers of the perturbation-velocity components above the first.

Vector Operators and Identities

Certain operators, which are closely associated with the linearized hyperbolic partial-differential equation of supersonic flow (the two-dimensional wave equation), are added to the vector operators commonly used. The basic operators have been used previously in references 2 and 7.

The gradient operator is defined by

$$\nabla = i\frac{\partial}{\partial x} + j\frac{\partial}{\partial y} + k\frac{\partial}{\partial z}$$

The analogous hyperbolic gradient operator defined by Robinson in reference 2 may be expressed as

$$\nabla h = -i\beta^2\frac{\partial}{\partial x} + j\frac{\partial}{\partial y} + k\frac{\partial}{\partial z}$$

The hyperbolic divergence of an arbitrary vector $\overline{E}$ is given by

$$\nabla h \cdot \overline{E}$$

Similarly, the hyperbolic curl of the vector $\overline{E}$ is given by

$$\nabla h \times \overline{E}$$

The divergence of the gradient operator is sometimes denoted by

$$\nabla^2 \equiv \nabla \cdot \nabla = \frac{\partial^2}{\partial x^2} + \frac{\partial^2}{\partial y^2} + \frac{\partial^2}{\partial z^2}$$

The analogous divergence of the hyperbolic gradient operator is denoted by

$$\nabla^2 h \equiv \nabla \cdot \nabla h = -\beta^2 \frac{\partial^2}{\partial x^2} + \frac{\partial^2}{\partial y^2} + \frac{\partial^2}{\partial z^2}$$

The following identities are needed. Let $\overline{E}$ be a vector and ψ and Λ be scalar functions of x, y, and z. Then,

$$\nabla\psi \cdot \nabla\Lambda = \nabla\Lambda \cdot \nabla\psi \tag{2a}$$

$$\nabla \cdot \psi\overline{E} = \psi\nabla \cdot \overline{E} + \overline{E} \cdot \nabla\psi \tag{2b}$$

$$\nabla \times (\nabla \times \overline{E}) = \nabla(\nabla \cdot \overline{E}) - \nabla^2\overline{E} \tag{2c}$$

$$\nabla \cdot (\nabla \times \overline{E}) = 0 \tag{2d}$$

$$\nabla h\psi \cdot \nabla\Lambda = \nabla h\Lambda \cdot \nabla\psi \tag{2e}$$

$$\nabla h \cdot \psi\overline{E} = \psi\nabla h \cdot \overline{E} + \overline{E} \cdot \nabla h\psi \tag{2f}$$

$$\nabla \times (\nabla h \times \overline{E}) = \nabla h(\nabla \cdot \overline{E}) - \nabla^2 h\overline{E} \tag{2g}$$

$$\nabla h \times (\nabla \times \overline{E}) = \nabla(\nabla h \cdot \overline{E}) - \nabla^2 h\overline{E} \tag{2h}$$

$$\nabla h \cdot (\nabla h \times \overline{E}) = 0 \tag{2i}$$

These identities can be proved by direct expansion.

The divergence theorem may be expressed as

$$\oint \overline{E} \cdot \overline{n}\, da = \int \nabla \cdot \overline{E}\, dv \tag{3}$$

where $\overline{n}$ is the normal unit vector to the element of area da. The vector $\overline{n}$ is expressed mathematically as

$$\overline{n} = i\nu_1 + j\nu_2 + k\nu_3$$

where ν_1, ν_2, and ν_3 are the direction cosines of the outward drawn normal to the element of area da.

A theorem more general than the divergence theorem is given by (this theorem follows from the results of reference 8, p. 87)

$$\oint \left(C_1\nu_1 E_x + C_2\nu_2 E_y + C_3\nu_3 E_z\right) da = \int \left(C_1 \frac{\partial E_x}{\partial x} + C_2 \frac{\partial E_y}{\partial y} + C_3 \frac{\partial E_z}{\partial z}\right) dv$$

where the subscripts x, y, and z refer to components of the vector $\overline{E}$, and C_1, C_2, and C_3 are arbitrary constants. Note that if $C_1 = C_2 = C_3 = 1$ the preceding equation reduces to equation (3). If

$$C_1 = -\beta^2$$

$$C_2 = C_3 = 1$$

the preceding equation reduces to

$$\oint \left(-\beta^2\nu_1 E_x + \nu_2 E_y + \nu_3 E_z\right) da = \int \left(-\beta^2 \frac{\partial E_x}{\partial x} + \frac{\partial E_y}{\partial y} + \frac{\partial E_z}{\partial z}\right) dv$$

or

$$\oint \overline{E} \cdot \overline{n}_h \, da = \int \nabla h \cdot \overline{E} \, dv \tag{4}$$

where

$$\overline{n}_h = -i\beta^2\nu_1 + j\nu_2 + k\nu_3$$

If the divergence theorem as expressed by equation (3) is applied to a volume throughout which

$$\nabla \cdot \overline{E} = 0$$

then the surface integral over the bounding surface is

$$\oint \overline{E} \cdot \overline{n} \, da = 0$$

provided that no surfaces exist inside the volume of integration across which the normal component of $\overline{E}$ is discontinuous. Similarly, if equation (4) is applied to a volume throughout which

$$\nabla h \cdot \overline{E} = 0$$

then the surface integral over the bounding surface is

$$\oint \overline{E} \cdot \overline{n}_h \, da = 0$$

provided that there are no surfaces inside the volume of integration across which $\overline{E} \cdot \overline{n}_h$ is discontinuous.. It is interesting to note, however, that surfaces exist inside the volume of integration across which $\overline{E} \cdot \overline{n}$ can be discontinuous while at the same time $\overline{E} \cdot \overline{n}_h$ remains continuous. It follows that for such a surface $\overline{n}$ and $\overline{n}_h$ must satisfy the relation

$$\overline{n} \cdot \overline{n}_h = 0 \tag{5}$$

Let $Q(x,y,z) = 0$ be the equation of such a surface.

Then,

$$\overline{n} = \frac{1}{\sqrt{Q_x^{\,2} + Q_y^{\,2} + Q_z^{\,2}}} \nabla Q$$

and

$$\overline{n}_h = \frac{1}{\sqrt{Q_x^{\,2} + Q_y^{\,2} + Q_z^{\,2}}} \nabla hQ$$

where the subscripts indicate differentation. Substituting the preceding expressions for $\overline{n}$ and $\overline{n}_h$ into equation (5) yields

$$-\beta^2\left(\frac{\partial Q}{\partial x}\right)^2 + \left(\frac{\partial Q}{\partial y}\right)^2 + \left(\frac{\partial Q}{\partial z}\right)^2 = 0 \tag{6}$$

Any solution of equation (6) set equal to zero is the equation of a surface across which $\nabla \cdot \overline{E}$ may be discontinuous while $\nabla h \cdot \overline{E}$ remains continuous. The fact that the Mach cone from any arbitrary point satisfies equation (6) can be easily verified. The equation of the envelope

of the Mach cones from an arbitrary line also satisfies equation (6) (reference 9, p. 106).

Finite Part of Integrals Which Arise in Steady Supersonic Flow

In the following sections use is made of the concept of the finite part of an infinite integral. This concept was introduced by Hadamard (reference 4) and has been used by a number of other investigators. The finite part is, however, sometimes confusing. This section was therefore included in an attempt to give a realistic picture of the finite-part concept and also to present the first steps of the derivation of the scalar and vector potentials.

The concept of the finite part of double integrals as defined by Hadamard and used in this paper is different from the concept of the finite part of double integrals as defined in reference 10. The essential difference between these two definitions lies in the manner in which the singular points along the Mach cone are treated.

In reference 3, page 183, a vector function is used in the derivation of the common scalar and vector potentials. The analogous vector function based on equation (1) is

$$\overline{W} = \frac{1}{R}\nabla\phi - \phi\nabla\frac{1}{R}$$

where

$$R = \sqrt{(x - \xi)^2 - \beta^2(y - \eta)^2 - \beta^2(z - \zeta)^2}$$

The hyperbolic divergence of vector $\overline{W}$ with respect to variables ξ, η, and ζ is given by

$$\nabla h \cdot \overline{W} = \frac{1}{R}\nabla^2 h\phi = \frac{1}{R}\left(-\beta^2\frac{\partial^2\phi}{\partial\xi^2} + \frac{\partial^2\phi}{\partial\eta^2} + \frac{\partial^2\phi}{\partial\zeta^2}\right)$$

The preceding equation indicates that the hyperbolic divergence of the vector $\overline{W}$ set equal to zero yields the partial-differential equation of linearized supersonic flow. A mathematical derivation of $\overline{W}$ can be obtained; however, for the purposes of this paper such a derivation is not needed.

The result of applying equation (4) to the vector $\overline{W}$ is

$$\oint\left(\frac{1}{R}\nabla\phi - \phi\nabla\frac{1}{R}\right) \cdot \overline{n}_h \, da = \int \frac{1}{R}\nabla^2 h\phi \, dv \tag{7}$$

When ϕ satisfies equation (1) throughout the volume of integration, the right side of equation (7) is zero; thus,

$$\oint\left(\frac{1}{R}\nabla\phi - \phi\nabla\frac{1}{R}\right) \cdot \overline{n}_h \, da = 0 \tag{8}$$

when

$$\nabla^2 h\phi = 0$$

Equation (7) is applied to a volume (denoted by v_0) enclosed in the forward Mach cone from the point (x,y,z). This volume is bounded by the surface given by $R = R'$, where R' is a small constant, and an arbitrary surface S_1 enclosed in the forward Mach cone from the point (x,y,z). A cross section of the region of integration is shown in figure 1. Note that this region is analogous to the region that is sometimes used in calculating the potential function satisfying Laplace's equation (reference 3, pp. 151-153). For regions such as the one shown in figure 1, equation (7) may be written as

$$\int_T \left(\frac{1}{R}\nabla\phi - \phi\nabla\frac{1}{R}\right) \cdot \overline{n}_h \, da + \int_{S_1} \left(\frac{1}{R}\nabla\phi - \phi\nabla\frac{1}{R}\right) \cdot \overline{n}_h \, da = \int_{v_0} \frac{1}{R}\nabla^2 h\phi \, dv \tag{9}$$

where T represents the area of integration when $R = R'$.

The integral over the area T may be reduced to

$$\int_T \frac{1}{R'}\left(\nabla\phi \cdot \overline{n}_h + \frac{\beta^2\phi}{r}\right) da \tag{10}$$

where r is given by

$$r = \sqrt{(x - \xi)^2 + \beta^4(y - \eta)^2 + \beta^4(z - \zeta)^2} \tag{11}$$

Since R' is a constant, equation (10) can be written as

$$\frac{1}{R'}\int_T \left(\nabla\phi \cdot \bar{n}_h + \frac{\beta^2\phi}{r}\right)da \tag{11}$$

Equation (9) can now be written as

$$-\frac{1}{R'}\int_T \left(\nabla\phi \cdot \bar{n}_h + \frac{\beta^2\phi}{r}\right)da + \int_{S_1} \left(\frac{1}{R}\nabla\phi - \phi\nabla\frac{1}{R}\right) \cdot \bar{n}_h \, da = \int_{V_0} \frac{1}{R}\nabla^2 h\phi \, dv \tag{12}$$

If ϕ is required to satisfy the linearized partial-differential equation of steady supersonic flow, then

$$\nabla^2 h\phi = 0$$

and equation (12) reduces to

$$\frac{1}{R'}\int_T \left(\nabla\phi \cdot \bar{n}_h + \frac{\beta^2\phi}{r}\right)da + \int_{S_1} \left(\frac{1}{R}\nabla\phi - \phi\nabla\frac{1}{R}\right) \cdot \bar{n}_h \, da = 0 \tag{13}$$

If R' is made smaller and smaller the integrand of the integral over the area T in equation (13) remains finite except on the small area close to the point (x,y,z). In anticipation of taking the limit of equation (13) as R' approaches zero, the small area close to the point (x,y,z) is removed from the area T. The area T is divided into two parts. One part is the area of T which is downstream of the surface given by

$$\xi = x - \epsilon$$

where ϵ is small but larger than R'. This area is denoted by τ. The remaining part of T (denoted by T') is the area of T which is upstream of the surface

$$\xi = x - \epsilon$$

A cross section of the region of integration with T divided into τ and T' is shown in figure 2. Equation (13) can now be expressed as

$$\frac{1}{R'}\int_{\tau}\left(\nabla\phi \cdot \bar{n}_h + \frac{\beta^2\phi}{r}\right)da + \frac{1}{R'}\int_{T'}\left(\frac{1}{R}\nabla\phi - \phi\nabla\frac{1}{R}\right) \cdot \bar{n}_h\, da +$$

$$\int_{S_1}\left(\frac{1}{R}\nabla\phi - \phi\nabla\frac{1}{R}\right) \cdot \bar{n}_h\, da = 0 \tag{14}$$

where R' is smaller than ϵ.

Since ϕ is continuous and therefore its values over τ are approximately constant for small values of ϵ, the integral over the area τ can be written as

$$\frac{1}{R'}\int_{\tau}\nabla\phi \cdot \bar{n}_h\, da + \frac{\beta^2\phi(x,y,z)}{R'}\int_{\tau}\frac{da}{r} \tag{15}$$

When the second integral of expression (15) is integrated, equation (14) becomes

$$\frac{1}{R'}\int_{\tau}\nabla\phi \cdot \bar{n}_h\, da + \frac{2\pi\epsilon\phi(x,y,z)}{R'} - 2\pi\phi(x,y,z) + \frac{1}{R'}\int_{T'}\left(\nabla\phi \cdot \bar{n}_h + \frac{\beta^2\phi}{r}\right)da +$$

$$\int_{S_1}\left(\frac{1}{R}\nabla\phi - \phi\nabla\frac{1}{R}\right) \cdot \bar{n}_h\, da = 0 \tag{16}$$

If R' is made to approach zero, equation (16) applies even to the limit where R' is zero.

The limit of equation (16) as R' approaches zero may be written as

$$\lim_{R' \to 0}\left[\frac{1}{R'}\int_{T}\nabla\phi \cdot \bar{n}_h\, da + \frac{2\pi\epsilon\phi(x,y,z)}{R'} - 2\pi\phi(x,y,z) + \frac{\beta^2}{R'}\int_{T'}\frac{\phi}{r}\, da +\right.$$

$$\left.\int_{S_1}\left(\frac{1}{R}\nabla\phi - \phi\nabla\frac{1}{R}\right) \cdot \bar{n}_h\, da\right] = 0 \tag{17}$$

The integrands of the integrals over the areas τ and T' are always finite and it can be shown that their first derivatives with respect to R' approach zero as R' approaches zero; therefore, the product

of $1/R'$ and these integrals either approaches zero in at least the order of R' or approaches infinity as R' approaches zero. Thus it follows that the integrals over the areas τ and T' have no finite terms remaining after the limit $(R' \longrightarrow 0)$ has been taken. The sum of the terms of equation (17) must be zero; thus the singularities resulting from the integrals over the areas τ and T' must cancel the singularities which arise from the integral over the area S_1.

From the preceding considerations it follows that one method of evaluating the finite part of infinite integrals of the type appearing in equation (17) is to evaluate the integral when R' is small but not zero and neglect the terms multiplied by powers of $1/R'$. Other infinite integrals sometimes arise, however, for which the finite part cannot be obtained by neglecting powers of $1/R'$. For example, if equation (17) is differentiated with respect to one of the variables (x, y, or z) an equation containing the velocity component is obtained. In some cases, when the point (x,y,z) lies on the surface S_1 the infinite terms are of the order $(\ln R')/R'$ and of the orders $(1/R')^n$. In these cases, the finite part of the infinite integrals can be obtained by evaluating the integrals when R' is small and neglecting the terms multiplied by powers of $1/R'$ and $(\ln R')/R'$.

The process of removing the infinite parts of an integral, however, has been derived by Hadamard (reference 4, book III, ch. I). Hadamard used his methods of evaluating the finite part of integrals in finding solutions to certain hyperbolic equations including the linearized equation of steady supersonic flow. Perhaps a fact worth noting is that the integrals of equation (17) are double integrals and when the methods given by Hadamard are used the methods given for multiple integrals should be used. In the past, the singular points (points on the Mach cone where the derivative of $(x - \xi)^2 - \beta^2(y - \eta)^2 - \beta^2(z - \zeta)^2$ with respect to the variable of integration is zero) have caused some confusion; as Hadamard points out (reference 4, p. 147), these singular points must be removed from the area of integration before the finite part is taken. Particular attention should be given to paragraph 92 of reference 4 since the special type of integrals discussed therein sometimes arises in dealing with planar problems.

Robinson (reference 2) has shown that when using Hadamard's methods the order of integration may be changed without affecting the finite part and that it is permissible to differentiate under the integral sign of a multiple integral without considering the variable limits which lie along the boundary where the integrand is singular, provided that only the finite part is taken. Both Hadamard and Robinson have shown that in differentiating an improper integral which has an integrand that has a one-half power singularity along variable limits the variable limits may be neglected provided the finite part of the resulting integral is taken.

The term "finite part" is somewhat misleading since the finite part of an integral can be infinite. In certain cases the integral is infinite even after the terms which approach infinity as R' approaches zero have been neglected.

Scalar Potential

The preceding arguments show that the finite parts of equation (17) can be equated to zero; thus,

$$-2\pi\phi(x,y,z) + {}^{f}\int_{S_1} \left(\frac{1}{R}\nabla\phi - \phi\nabla\frac{1}{R}\right) \cdot \bar{n}_h \, da = 0$$

where the symbol f before the integral denotes that only the finite part is to be taken. The preceding equation may be solved for the value of the potential at the point (x,y,z); the result of this operation is given by

$$\phi(x,y,z) = \frac{1}{2\pi} {}^{f}\int_{S_1} \left(\frac{1}{R}\nabla\phi - \phi\nabla\frac{1}{R}\right) \cdot \bar{n}_h \, da \tag{18}$$

It should be remembered that surfaces can exist inside the forward Mach cone from the point (x,y,z) across which $\frac{1}{R}\nabla\phi - \phi\nabla\frac{1}{R}$ can be discontinuous and across which $\left(\frac{1}{R}\nabla\phi - \phi\nabla\frac{1}{R}\right) \cdot \bar{n}_h$ remains continuous.

Equation (18) is an expression for the scalar potential at the point (x,y,z) in terms of the potential and its derivatives with respect to $\bar{n}_h$ on the surface S_1. A more general expression for the scalar potential than that given by equation (18) can be obtained. If within the volume enclosed by the forward Mach cone from the point (x,y,z) and the surface S_1 equation (1) is not satisfied and $\nabla^2 h$ operating upon ϕ yields

$$\nabla^2 h\phi(\xi,\eta,\zeta) = f(\xi,\eta,\zeta) \tag{19}$$

then equation (10) becomes

$$\frac{1}{R'}\int_T \left(\nabla\phi \cdot \bar{n}_h + \frac{\beta^2\phi}{r}\right)da + \int_{S_1} \left(\frac{1}{R}\nabla\phi - \phi\nabla\frac{1}{R}\right) \cdot \bar{n}_h \, da = \int_{V_0} \frac{f(\xi,\eta,\zeta)}{R} \, dv \tag{20}$$

Provided that $f(\xi,\eta,\zeta)$ is always finite, the right side of equation (20) is finite; furthermore, the right side of equation (20) remains finite as R' approaches zero. If in equation (20) R' is made to approach zero and only the finite parts of the integrals are retained, then the resulting expression is

$$\phi(x,y,z) = \frac{1}{2\pi} {}^{f}\!\int_{S_1} \left(\frac{1}{R}\nabla\phi - \phi\nabla\frac{1}{R}\right) \cdot \bar{n}_h \, da - \frac{1}{2\pi}\int_{v_1} \frac{f(\xi,\eta,\zeta)}{R} \, dv \tag{21}$$

where v_1 represents the volume v_0 when R' is equal to zero. Equation (21) is equation (58) of reference 4 where β^2 has been set equal to one. Note that the volume integral in equation (21) has the appearance of the integral for the potential resulting from a volume distribution of sources in an incompressible flow.

The assumption has been made that ϕ is continuous throughout the volume v_1. It is also assumed that no surfaces exist inside v_1 across which $\partial\phi/\partial n_h$ is discontinuous. If equation (21) is applied to a volume v_1, which has surfaces across which ϕ and/or the derivative of ϕ in the direction of $\bar{n}_h$ is discontinuous, these surfaces of discontinuity can be removed from the volume of integration by allowing the arbitrary surface S_1 to envelop them (see fig. 3). For volumes of integration where the surfaces of discontinuity have been removed in this manner, the scalar potential can be written as

$$\phi(x,y,z) = -\frac{1}{2\pi}\int_{v_1} \frac{f(\xi,\eta,\zeta)}{R} \, dv + \frac{1}{2\pi} {}^{f}\!\int_{S_0} \left(\frac{1}{R}\Delta\frac{\partial\phi}{\partial n_h'} - \Delta\phi\frac{\partial}{\partial n_h'}\frac{1}{R}\right) da +$$

$$\frac{1}{2\pi} {}^{f}\!\int_{S_1-S_0} \left(\frac{1}{R}\nabla\phi - \phi\nabla\frac{1}{R}\right) \cdot \bar{n}_h \, da \tag{22}$$

where S_0 denotes the surface of discontinuity, and $\Delta\phi$ is the potential difference across the surface S_0. The notation $\partial/\partial n_h'$ is used to denote the operator

$$-\beta^2\nu_1'\frac{\partial}{\partial\xi} + \nu_2'\frac{\partial}{\partial\eta} + \nu_3'\frac{\partial}{\partial\zeta}$$

For the cases where no surface of discontinuity exists inside the volume v_1 and ϕ and $\nabla\phi$ are zero on the surface $S_1 - S_0$, equation (22) reduces to

$$\phi(x,y,z) = -\frac{1}{2\pi}\int_{v_1} \frac{f(\xi,\eta,\zeta)}{R}\, dv \tag{23}$$

From equation (19)

$$\nabla^2 h\phi(x,y,z) = f(x,y,z) \tag{24}$$

Note that equation (23) is a solution of the partial-differential equation (24).

For most problems in linearized supersonic flow, $f(\xi,\eta,\zeta)$ is zero and ϕ is zero upstream of the disturbing body. For such problems, the surface $S_1 - S_0$ can be taken to be located upstream of the disturbing body where ϕ and $\nabla\phi$ are zero. In this case, equation (22) reduces to

$$\phi(x,y,z) = \frac{1}{2\pi}\, {}^{f}\!\!\int_{S_0} \left(\frac{1}{R}\,\Delta\,\frac{\partial}{\partial n_h{}'}\,\phi - \Delta\phi\,\frac{\partial}{\partial n_h{}'}\,\frac{1}{R}\right) da \tag{25}$$

If the surface S_0 is confined to the $\zeta = 0$ plane, equation (25) reduces to equation (10) of reference 6. In this reference the boundary conditions for airfoils are discussed.

Components of Vector Field

Let $\overline{F}$ be a vector which is finite and integrable in a given volume (denoted by λ) and is zero outside the volume λ. To each point in the volume associate the vector

$$\overline{G}(x,y,z) \equiv \int_{v_2} \frac{\overline{F}(\xi,\eta,\zeta)}{R}\, dv \tag{26}$$

where v_2 denotes the part of the volume λ enclosed in the forward Mach cone from the point (x,y,z).

From equations (24) and (26), it follows that each component of $\overline{G}$ satisfies the relation

$$\nabla^2 hG_i(x,y,z) = -2\pi F_i(x,y,z) \tag{27}$$

where the subscript i refers to any component of the vector field.

Let $\psi_0(x,y,z)$ be a scalar and $\overline{A}(x,y,z)$ be a vector defined by the equations

$$2\pi\psi_0 \equiv \nabla h \cdot \overline{G} = \int_{v_2}^{f} \overline{F}(\xi,\eta,\zeta) \cdot \nabla h \frac{1}{R} \, dv \tag{28}$$

and

$$2\pi\overline{A} \equiv \nabla \times \overline{G} = \int_{v_2}^{f} \overline{F}(\xi,\eta,\zeta) \times \nabla \frac{1}{R} \, dv \tag{29}$$

Equation (2h) indicates that

$$\nabla h \times (\nabla \times \overline{G}) = \nabla(\nabla h \cdot \overline{G}) - \nabla^2 h\overline{G} \tag{30}$$

Substituting the expressions for $\nabla \times \overline{G}$, $\nabla h \cdot \overline{G}$, and $\nabla^2 h\overline{G}$ as given by equations (27), (28), and (29), respectively, into equation (30) and solving for $\overline{F}$ yields

$$\overline{F}(x,y,z) = -\nabla\psi_0(x,y,z) + \nabla h \times \overline{A}(x,y,z) \tag{31}$$

Since $\overline{F}$ is an arbitrary vector, equation (31) indicates that any finite integrable vector field can be expressed in terms of the gradient of a scalar and the hyperbolic curl of a vector. Equation (31) has the appearance of the Helmholtz theorem (reference 3, p. 187); however, since ψ_0 and $\overline{A}$ are found by integration only in the forward Mach cone from the point (x,y,z), equation (31) hardly seems to be a statement of the Helmholtz theorem as is commonly given. The result given by equation (31) was obtained by Robinson in reference 2.

Hyperbolic Vector Potential

Equation (31) indicates that the perturbation velocity vector can be divided into two parts. One part is the gradient of a scalar function, and the other is the hyperbolic curl of a vector function. The vector function is analogous to the common vector potential (reference 3, pp. 104 and 188); therefore, the vector function is referred to as the hyperbolic vector potential. Thus, if $\overline{q}'$ is the total perturbation velocity vector, then

$$\overline{q}' = \nabla\phi + \nabla h \times \overline{A} \tag{32}$$

where ϕ is the scalar potential and $\bar{A}$ is the hyperbolic vector potential. The part of the velocity vector which is made up of the hyperbolic curl of the vector potential is denoted by $\bar{q}$.

By direct expansion it can be shown that

$$\nabla h \cdot \bar{q}' = \nabla h \cdot \nabla\phi + \nabla h \cdot (\nabla h \times \bar{A}) = \nabla^2 h\phi + \nabla h \cdot (\nabla h \times \bar{A}) = 0 \tag{33}$$

Equation (33) indicates that the hyperbolic divergence of the perturbation velocity vector is zero.

The vorticity vector is given by

$$\bar{H} = \nabla \times \bar{q}' \tag{34}$$

Therefore, from equation (32),

$$\bar{H} = \nabla \times (\nabla h \times \bar{A})$$

or

$$\bar{H} = \nabla h(\nabla \cdot \bar{A}) - \nabla^2 h\bar{A}$$

From equations (2d) and (29), the divergence of the hyperbolic vector potential is zero; thus,

$$\bar{H} = -\nabla^2 h\bar{A} \tag{35}$$

Each component of equation (35) is a partial-differential equation of the form of equation (24); thus, from equation (23) each component of equation (35) has a solution given by

$$A_i(x,y,z) = \frac{1}{2\pi}\int_{v_1} \frac{H_i(\xi,\eta,\zeta)}{R}\, dv \tag{36}$$

where the subscript i refers to any component of the vector $\bar{H}$. Since each component of $\bar{A}$ is given by equation (36), then

$$\bar{A}(x,y,z) = \frac{1}{2\pi}\int_{v_1} \frac{\bar{H}(\xi,\eta,\zeta)}{R}\, dv \tag{37}$$

The velocity vector resulting from the hyperbolic vector potential is therefore given by

$$\bar{q} = \nabla h \times \bar{A} = \frac{1}{2\pi} \overset{f}{\int_{v_1}} \nabla h \times \frac{\bar{H}}{R} \, dv \tag{38}$$

or

$$u = \frac{\beta^2}{2\pi} \overset{f}{\int_{v_1}} \frac{(y - \eta)H_z - (z - \zeta)H_y}{R^3} \, dv \tag{39a}$$

$$v = \frac{\beta^2}{2\pi} \overset{f}{\int_{v_1}} \frac{(z - \zeta)H_x - (x - \xi)H_z}{R^3} \, dv \tag{39b}$$

$$w = \frac{\beta^2}{2\pi} \overset{f}{\int_{v_1}} \frac{(x - \xi)H_y - (y - \eta)H_x}{R^3} \, dv \tag{39c}$$

where the subscripts refer to the components of the vector $\bar{H}$. The results given by equations (39) were obtained by Robinson in reference 2.

Vortex Sheets

If the vorticity is confined to a surface S_2, equation (37) becomes

$$\bar{A}(x,y,z) = \frac{1}{2\pi} \int_{S_2} \frac{\bar{H}(\xi,\eta,\zeta)}{R} \, da \tag{40}$$

Equation (40) is an expression for the hyperbolic vector potential resulting from a surface of vorticity. Note that if the vorticity is zero except on the surface S_2, then equation (35) reduces to

$$\nabla^2 h\bar{A} = 0$$

By removing the surface S_2 from the volume of integration each component of $\bar{A}$ can be expressed as (from equation (25))

$$A_i(x,y,z) = \frac{1}{2\pi} \overset{f}{\int_{S_2}} \left(\frac{1}{R} \Delta \frac{\partial A_i}{\partial n_h'} - \Delta A_i \frac{\partial}{\partial n_h'} \frac{1}{R}\right) da \tag{41}$$

where the subscript i refers to any component of the vector $\bar{A}$. Since each component of $\bar{A}$ is given by equation (41), then

$$\bar{A}(x,y,z) = \frac{1}{2\pi} \overset{f}{\int}_{S_2} \left(\frac{1}{R} \Delta \frac{\partial \bar{A}}{\partial n_h'} - \Delta \bar{A} \frac{\partial}{\partial n_h'} \frac{1}{R}\right) da \tag{42}$$

Note that if $\Delta\bar{A}$ is zero, equation (42) reduces to

$$\bar{A}(x,y,z) = \frac{1}{2\pi} \int_{S_2} \frac{1}{R} \Delta \frac{\partial \bar{A}}{\partial n_h'} da \tag{43}$$

By comparing equations (40) and (43) it follows that, on the surface S_2,

$$\bar{H} = \Delta \frac{\partial \bar{A}}{\partial n_h'} \tag{44}$$

Equation (44) indicates that across a surface of vorticity the derivative of the hyperbolic vector potential in the direction of $\bar{n}_h'$ is discontinuous. Thus, a lifting surface can be represented by a continuous hyperbolic vector potential, while it can be shown that a thickness effect can be represented by a discontinuous hyperbolic vector potential. Note the contrast with the scalar potential, which uses a continuous potential to represent a thickness effect and a discontinuous potential to represent a lifting surface.

Further Development of Scalar Potential

The scalar potential can be expressed in forms other than those already presented. Equation (8) is applied to the region bounded by the arbitrary surface S_1, the forward Mach cone from the point (x,y,z), and a second arbitrary surface S_3 enclosed in the forward Mach cone from the point (x,y,z) and upstream of the surface S_1. A cross section of such a region is shown in figure 4. The result of applying equation (8) to this region is

$$\overset{f}{\int}_{S_1} \left(\frac{1}{R} \frac{\partial \phi'}{\partial n_h^*} - \phi' \frac{\partial}{\partial n_h^*} \frac{1}{R}\right) da + \overset{f}{\int}_{S_3} \left(\frac{1}{R} \frac{\partial \phi'}{\partial n_h^*} - \phi' \frac{\partial}{\partial n_h^*} \frac{1}{R}\right) da = 0 \tag{45}$$

provided that ϕ' is a solution of equation (1). Note that the scalar potential as given by equation (18) is independent of ϕ' so that ϕ' is arbitrary so long as it satisfies equation (1) throughout the proper volume.

If for a finite distance upstream ϕ' is zero and remains zero for greater distances upstream, the surface S_3 may be chosen in this region so that the integral over S_3 in equation (45) is zero; thus,

$$-\frac{1}{2\pi}\,{}^{f}\!\int_{S_1}\left(\frac{1}{R}\frac{\partial\phi'}{\partial n_h{}^*} - \phi'\frac{\partial}{\partial n_h{}^*}\frac{1}{R}\right)da = 0 \tag{46}$$

Equations (18) and (46) can be combined to yield

$$\phi(x,y,z) = \frac{1}{2\pi}\,{}^{f}\!\int_{S_1}\left[\frac{1}{R}\left(\frac{\partial\phi}{\partial n_h} - \frac{\partial\phi'}{\partial n_h{}^*}\right) - (\phi - \phi')\frac{\partial}{\partial n_h{}^*}\frac{1}{R}\right]da \tag{47}$$

The only restrictions placed on ϕ' at this point are that it satisfy equation (1) and be zero at a finite distance upstream. In many cases ϕ' may be chosen so that $\frac{\partial\phi}{\partial n_h} - \frac{\partial\phi'}{\partial n_h{}^*}$ or $\phi - \phi'$ is zero; therefore, in these cases, ϕ can be expressed as

$$\phi(x,y,z) = \frac{1}{2\pi}\int_{S_1}\frac{1}{R}\left(\frac{\partial\phi}{\partial n_h} - \frac{\partial\phi'}{\partial n_h{}^*}\right)da \tag{48a}$$

or

$$\phi(x,y,z) = -\frac{1}{2\pi}\,{}^{f}\!\int_{S_1}(\phi - \phi')\frac{\partial}{\partial n_h}\frac{1}{R}\,da \tag{48b}$$

Equations (48) are quite useful; however, remember that they apply only when ϕ' can be chosen so that ϕ' does not violate any of its restrictions.

Note that equations (48) can be applied to problems where either ϕ or $\partial\phi/\partial n_h$ is given on the surface S_1. The application of these equations to most nonplanar problems of either type, however, lead to quite unwieldy integral equations.

APPLICATIONS

Planar Problems

Many problems in linearized supersonic flow deal with the surface of discontinuity confined to a plane surface parallel to the x-axis. In this section a general discussion of this type of problem is given. The coordinates are located so that the surface of discontinuity is in the $\zeta = 0$ plane.

The scalar potential at an arbitrary point (x,y,z) above the $\zeta = 0$ plane is (from equation (47))

$$\phi(x,y,z) = -\frac{1}{2\pi} \overset{f}{\int_{S_1}} \left[\left(\phi_z - \phi_z'\right)\frac{1}{R} + (\phi - \phi')\frac{\beta^2 z}{R^3}\right] d\xi\, d\eta \tag{49}$$

In this case, the surface S_1 is the $\zeta = 0$ plane.

If $\phi'(x,y,0)$ is chosen equal to $\phi(x,y,0)$ the potential becomes symmetric with respect to the $\zeta = 0$ plane. Thus, for $z = a$

$$\phi(x,y,a) = \phi'(x,y,-a)$$

and

$$\phi_z(x,y,a) = -\phi_z'(x,y,-a)$$

For this case, equation (49) reduces to

$$\phi(x,y,z) = -\frac{1}{\pi} \int_{S_1} \frac{\phi_z(\xi,\eta,0)}{R}\, d\xi\, d\eta \tag{50}$$

Equation (50) was given by Puckett in reference 5.

If $\phi'(x,y,0)$ is chosen equal to $-\phi(x,y,0)$ the potential becomes antisymmetric with respect to the $\zeta = 0$ plane. In this case,

$$\phi(x,y,a) = -\phi'(x,y,-a)$$

and

$$\phi_z(x,y,a) = \phi_z'(x,y,-a)$$

Thus, equation (49) is reduced to

$$\phi(x,y,z) = -\frac{\beta^2 z}{\pi} \int_{S_1}^{f} \frac{\phi(\xi,\eta,0)}{R^3} \, d\xi \, d\eta \tag{51}$$

Note that for surface S_1 not confined to a plane parallel to the x-axis, a choice of $\phi'(x,y,z)$ at the surface S_1 to equal $\phi(x,y,z)$ at S_1 does not cause $\frac{\partial\phi}{\partial n_h}(x,y,z)$ at the surface S_1 to equal $-\frac{\partial\phi'}{\partial n_h^*}(x,y,z)$ at S_1. Similarly, choosing $\phi'(x,y,z)$ at the surface S_1 equal to $-\phi(x,y,z)$ at S_1 does not cause $\frac{\partial\phi'}{\partial n_h^*}(x,y,z)$ at S_1 to equal $\frac{\partial\phi(x,y,z)}{\partial n}$ at S_1.

Provided the discontinuities are restricted to the $\zeta = 0$ plane, the scalar potential can also be expressed as follows (from equation (18)):

$$\phi(x,y,z) = -\frac{1}{2\pi} \int_{S_1}^{f} \left[\frac{\phi_z(\xi,\eta,0)}{R} + \phi(\xi,\eta,0)\frac{\beta^2 z}{R^3}\right] d\xi \, d\eta \tag{52}$$

for positive z. A comparison of equations (50) and (51) with equation (52) shows that the two terms of the integrand of equation (52) contribute equal amounts to the potential at any point (x,y,z).

Since the terms of the integrand of equation (52) contribute equal amounts to the potential at the point (x,y,z) as z approaches zero, equation (52) must reduce to

$$\phi(x,y,0) = -\frac{1}{2\pi} \int_{S_1} \frac{\phi_z(\xi,\eta,0)}{R} \, d\xi \, d\eta + \frac{\phi(x,y,0)}{2}$$

The preceding equation can also be obtained by examining the limit of equation (52) as z approaches zero. If this procedure is done the entire contribution of the second term of the integrand of equation (52) is found to come from the point at the apex of the hyperbola formed by the intersection of the Mach cone from the point (x,y,z) and the $\zeta = 0$ plane. Note that if the integration is performed first with respect to η then, when the methods of Hadamard are used, the point at the apex of the hyperbola is a singular point and must be removed from the area of integration by a process such as is given in reference 4, page 147.

If ϕ_z is prescribed over the $\zeta = 0$ plane, then the potential is given uniquely by equation (50). Similarly, if the potential is prescribed over the $\zeta = 0$ plane, then the derivative of ϕ with respect to z is determined over the $z = 0$ plane. This result follows from equation (51) since prescribing ϕ over the $z = 0$ plane determines the potentials in the space above the $z = 0$ plane; therefore, it also determines ϕ_z in the space above the $z = 0$ plane and the limit of ϕ_z as z approaches zero from the positive direction.

The question that arises is whether $\phi(x,y,z)$ is uniquely determined in the space above the $z = 0$ plane if ϕ is prescribed over certain areas of the $z = 0$ plane and ϕ_z is prescribed over the remaining areas. If the assumption is made that ϕ is not determined uniquely, then at least two potential functions satisfy the condition that either ϕ or ϕ_z is prescribed in all regions on the $z = 0$ plane and that ϕ is identically zero upstream of a given point. Let ϕ_1 and ϕ_2 denote two potential functions which satisfy the same boundary conditions, and let ϕ_0 denote the potential function formed by taking the difference between ϕ_1 and ϕ_2. Mathematically, the potential function ϕ_0 is given by

$$\phi_0(x,y,z) = \phi_1(x,y,z) - \phi_2(x,y,z) \tag{53}$$

Since ϕ_1 and ϕ_2 have the same values in certain regions in the $z = 0$ plane then ϕ_0 is zero in these regions. Similarly, since $\partial\phi_1/\partial z$ and $\partial\phi_2/\partial z$ have the same values in the remaining regions of the $z = 0$ plane, then $\partial\phi_0/\partial z$ is zero in these remaining regions. The potential function ϕ_0 has the boundary conditions that either ϕ_0 or $\partial\phi_0/\partial z$ is zero in all regions of the $z = 0$ plane and that ϕ_0 is identically zero upstream of a given point.

Consider the case where all the boundaries between the regions are supersonic. (The slope of the boundaries are such that the component of the free stream perpendicular to the boundary is always supersonic.) The potential function ϕ_0 can be evaluated by use of equations (50) and (51) for points in areas which are far enough upstream to be affected only by a region where ϕ or ϕ_z is prescribed. For all points in these areas ϕ_0 is zero as indicated by equations (50) or (51). It follows from equations (50) and (51) that ϕ_0 is also zero inside the volume above the $z = 0$ plane, which is affected by these areas alone. Thus, the volume where ϕ_0 is identically zero has been moved downstream. The same argument can be repeated until the complete $z = 0$ plane has been covered. The preceding arguments cannot be applied to cases where the regions have subsonic boundaries; however, if it is permissible to distort the boundaries within a strip of infinitesimal width these subsonic edges can be converted into supersonic edges by replacing every element of the subsonic boundaries by a broken line made up of supersonic segments. Such a procedure is illustrated in figure 5. If the

assumption is made that the subsonic boundaries may be distorted an infinitesimal amount, then ϕ_0 is zero over the $z = 0$ plane and also in the space above the $z = 0$ plane. Equation (53) now reduces to

$$\phi_1(x,y,z) = \phi_2(x,y,z)$$

Since ϕ_1 and ϕ_2 are any two potential functions with the same values in certain regions of the $z = 0$ plane and with the same partial derivatives with respect to z in the remaining regions, proof has been given that only one potential function exists for which the potential is prescribed over certain areas in the $z = 0$ plane and the partial derivative with respect to z is prescribed over the remaining areas.

The boundary conditions for a zero-thickness lifting airfoil with a given local angle-of-attack distribution are not of the type discussed in the preceding paragraph. The conditions prescribed in the $z = 0$ plane for this type of problem are: The potential function ϕ is identically zero upstream of the airfoil; $\phi(x,y,0)$ is zero except on the plan form or in the wake; the partial derivative of the potential with respect to z, ϕ_z, is given on the plan form; and $\phi_x(x,y,0)$ is zero in the wake. The preceding boundary conditions do not specify that ϕ or ϕ_z be prescribed in all regions on the $z = 0$ plane since not ϕ but ϕ_x is given in the wake. For airfoils which have trailing edges which are always supersonic, the requirement that ϕ be continuous in the stream direction necessitates the potential in the wake to have the value of the potential at the trailing edge of the airfoil. In this case, the potential function is uniquely determined. For airfoils which have subsonic trailing edges the Kutta-Joukowski condition is generally applied to the trailing edges to determine ϕ uniquely. If the assumption is made that the trailing edge can be distorted within a strip of infinitesimal width, then the requirement that ϕ be continuous in the stream direction can be used to determine ϕ uniquely. If the assumption is made that the subsonic trailing edge is distorted within the infinitesimal strip so that each segment of each line element of the trailing edge is always supersonic (see fig. (6)), then ϕ is determined uniquely. It is well-known that for airfoils with subsonic trailing edges there are an infinite number of solutions which satisfy the boundary conditions as stated at the beginning of this paragraph. The preceding arguments however prove that there is but one solution for an airfoil which has had its subsonic edges replaced by broken lines which are always supersonic. Note that it has not been proved that the solution obtained by distorting the subsonic trailing edges corresponds to the solution satisfying the Kutta-Joukowski condition, nor has it been proved that the solution of the distorted trailing edge is independent of the manner of distortion.

Nonplanar Problems

The scalar potential resulting from the disturbances caused by a nonplanar body can be found from equation (18) provided that both ϕ and $\partial\phi/\partial n_h$ are known on some surface S_1. Unfortunately, ϕ and $\partial\phi/\partial n_h$ are not generally known on a surface which fills the requirement of the surface S_1; therefore, equation (18) appears to have little value in the calculation of the potential functions for nonplanar systems in general. Certain properties of equation (18) are, however, worth investigating.

The problem of evaluating the potential on the upper surfaces of a long rectangular body is discussed. The assumption is made that the body extends upstream to infinity and that the sides are parallel to the free-stream direction except for small local variations which cause small disturbances in the stream. Figure 7(a) shows the forward Mach cone from a point on the upper surface of such a rectangular body. This figure also shows that there is a certain part of the surface of the rectangular body in the forward Mach cone from the point (x,y,z) that cannot possibly affect the potential at the point (x,y,z). If the surface S_1 in equation (18) is taken to be the surface of the rectangular body, then equation (18) indicates that the values of ϕ and $\partial\phi/\partial n_h$ in the region which cannot possibly affect the potential at the point (x,y,z) should be used in evaluating the potential at the point (x,y,z). The only possible explanation of this consideration is that the integral of ϕ and $\partial\phi/\partial n_h$ caused by the disturbances in the "blind spot" add to zero. This consideration can be shown mathematically as follows. Let ψ_0 denote the potential function resulting from the disturbances inside the blind spot. From equation (46), it follows that

$$\int_{S_1}^{f} \left(\frac{1}{R}\frac{\partial\psi_0}{\partial n_h{}^*} - \psi_0 \frac{\partial}{\partial n_h{}^*}\frac{1}{R}\right) da = 0 \tag{54}$$

Equation (54) indicates that the potential at the point (x,y,z) can be evaluated by applying equation (18) to the surface of the rectangular body regardless of the blind spots. The same argument holds for other bodies with blind spots.

The preceding arguments can be clarified by a simple illustration of the affect of a blind spot. Consider an infinite rectangular body such as shown in figure 7 where the only disturbances are caused by a small deflected area with a constant slope σ with respect to the free-stream direction located on the lower surface of the body. The leading edge of the deflected area is chosen perpendicular to the free-stream direction so that the potential in the region not affected by the vertical sides is of a two-dimensional nature. Figure 7(b) illustrates such a disturbing surface.

The disturbance potential in the two-dimensional region is given by

$$\phi(x,z) = \frac{\sigma V\left[x - x_2 + \beta(z - z_2)\right]}{\beta}$$

where the lower surface of the body lies in the $z = z_2$ plane and the leading edge of the deflected area is in the $x = x_2$ plane.

A point on the upper surface which has only the two-dimensional flow in its forward Mach cone is illustrated in figure 7(c). The disturbance potential for this point is (from equation (18)) given by

$$\phi(x,y,z) = \frac{1}{2\pi} \int^{f} \left[\frac{\sigma V}{R} + \frac{\beta^2 \sigma V(\xi - x_2)(z - z_2)}{R^3}\right] d\xi \, d\eta$$

Upon performing the indicated integrations the preceding expression becomes

$$\phi(x,y,z) = -\frac{\sigma V\left[x - x_2 - \beta(z - z_2)\right]}{2\beta} + \frac{\sigma V\left[x - x_2 - \beta(z - z_2)\right]}{2\beta}$$

which reduces to

$$\phi(x,y,z) = 0$$

This result is a demonstration that the disturbances in blind spots do not contribute to the potential.

The scalar potential resulting from the disturbance produced by a nonplanar body can also be obtained by use of equations (47) and (48) provided that the necessary values of ϕ, $\partial\phi/\partial n_h$, ϕ', and $\partial\phi'/\partial n_h$ are known. In dealing with planar bodies ϕ' could be chosen so that

$$\phi - \phi' = 0$$

and thus equation (47) is reduced to equation (50). Similarly, ϕ' could also be chosen so that

$$\frac{\partial\phi}{\partial n_h} = \frac{\partial\phi'}{\partial n_h{}^*}$$

and thus equation (47) is reduced to equation (51). Unfortunately, for nonplanar bodies, choosing ϕ' equal to ϕ does not make $\partial\phi'/\partial n_h{}^*$

known as was the case for planar problems and, similarly, choosing $\partial\phi'/\partial n_h{}^*$ equal to $-\partial\phi/\partial n_h$ does not make ϕ' known. Certain problems exist in which ϕ' can be chosen so that ϕ can be written as a simple integral.

Intersecting Planes

Many problems concerning nonplanar bodies deal with disturbances produced by two intersecting planes parallel to the free-stream direction. In this section, methods of solutions for two planes intersecting at various angles are given. The component of velocity normal to the surface is assumed to be known.

Perhaps the simplest case of two intersecting planes occurs when the planes intersect at right angles. It is desired to find the potential in space resulting from the disturbances produced by the two intersecting planes. This type of problem could represent an isolated cruciform tail with supersonic leading edges undergoing various motions. Problems of this type have been solved in references 11 and 12. The axes are chosen so that $y = 0$ and $z = 0$ are the disturbing planes (see fig. 8). When y and z are positive, equation (18) becomes

$$\phi(x,y,z) = -\frac{1}{2\pi}\int_{S_3} \frac{1}{R}\frac{\partial\phi(\xi,0^+,\zeta)}{\partial\eta}da - \frac{\beta^2 y}{2\pi}\,{}^f\!\!\int_{S_3} \frac{\phi(\xi,0^+,\zeta)}{R^3}\,da -$$

$$\frac{1}{2\pi}\int_{S_4} \frac{1}{R}\frac{\partial\phi(\xi,\eta,0^+)}{\partial\zeta}da - \frac{\beta^2 z}{2\pi}\,{}^f\!\!\int_{S_4} \frac{\phi(\xi,\eta,0^+)}{R^3}\,da \tag{55}$$

The surface S_1 has been taken to be the disturbing surface; thus, S_3 is the part of the $y = 0$ plane (z positive) bounded by the $z = 0$ line in the $y = 0$ plane and the forward Mach cone from the point (x,y,z). Similarly, S_4 is the part of the $z = 0$ plane (y positive) bounded by the $y = 0$ line in the $z = 0$ plane and the trace of the forward Mach cone from the point (x,y,z) (see fig. 9).

The assumption is made that $\frac{\partial\phi(\xi,0^+,\zeta)}{\partial\eta}$ and $\frac{\partial\phi(\xi,\eta,0^+)}{\partial\zeta}$ are known and that $\phi(\xi,0^+,\zeta)$ and $\phi(\xi,\eta,0^+)$ are unknown. The integrals containing $\phi(\xi,0^+,\zeta)$ and $\phi(\xi,\eta,0^+)$ can be eliminated by several applications of equation (46). Equation (46) is applied to the volume on the left-hand side of the $y = 0$ plane enclosed by the forward Mach cone from the point (x,y,z), the $y = 0$ plane, the $z = 0$ plane, and

an arbitrary surface upstream of the disturbance (see fig. 10). The result of applying equation (46) to this volume is

$$-\frac{1}{2\pi}\int_{S_5}\frac{1}{R}\frac{\partial\phi'(\xi,\eta,0^+)}{\partial\zeta}da - \frac{\beta^2 z}{2\pi}\,{}^f\!\int_{S_5}\frac{\phi'(\xi,0^+,\zeta)}{R^3}\,da +$$

$$\frac{1}{2\pi}\int_{S_3}\frac{1}{R}\frac{\partial\phi'(\xi,0^-,\zeta)}{\partial\eta}da + \frac{\beta^2 y}{2\pi}\,{}^f\!\int_{S_3}\frac{\phi'(\xi,0^-,\zeta)}{R^3}\,da = 0 \tag{56}$$

The surface S_1 has been taken to be the $y = 0$ plane (z positive) and the $z = 0$ plane (y negative); thus, S_5 is the part of the $z = 0$ plane in the forward Mach cone from the point (x,y,z) (see fig. 10). Adding equations (55) and (56) yields

$$\phi(x,y,z) = -\frac{1}{2\pi}\int_{S_3}\frac{1}{R}\left[\frac{\partial\phi(\xi,0^+,\zeta)}{\partial\eta} - \frac{\partial\phi'(\xi,0^-,\zeta)}{\partial\eta}\right]da -$$

$$\frac{\beta^2 y}{2\pi}\,{}^f\!\int_{S_3}\frac{1}{R^3}\left[\phi(\xi,0^+,\zeta) - \phi'(\xi,0^-,\zeta)\right]da - \frac{1}{2\pi}\int_{S_4}\frac{\frac{\partial\phi(\xi,\eta,0^+)}{\partial\zeta}}{R}\,da -$$

$$\frac{\beta^2 z}{2\pi}\,{}^f\!\int_{S_4}\frac{\phi(\xi,\eta,0^+)}{R^3}\,da - \frac{1}{2\pi}\int_{S_5}\frac{\frac{\partial\phi'(\xi,\eta,0^+)}{\partial\zeta}}{R}\,da -$$

$$\frac{\beta^2 z}{2\pi}\,{}^f\!\int_{S_5}\frac{\phi'(\xi,0^+,\zeta)}{R^3}\,da \tag{57}$$

The potential function $\phi'(\xi,\eta,\zeta)$ is chosen so that

$$\phi'(\xi,-a,\zeta) = \phi(\xi,a,\zeta)$$

where a is positive. In this case,

$$\frac{\partial\phi'(\xi,0^-,\zeta)}{\partial\eta} = -\frac{\partial\phi(\xi,0^+,\zeta)}{\partial\eta}$$

and equation (57) reduces to

$$\phi(x,y,z) = -\frac{1}{\pi}\int_{S_3}\frac{1}{R}\frac{\partial\phi(\xi,0^+,\zeta)}{\partial\eta}da - \frac{1}{2\pi}\int_{S_4}\frac{1}{R}\frac{\partial\phi(\xi,\eta,0^+)}{\partial\zeta}da -$$

$$\frac{\beta^2 z}{2\pi}\,{}^{f}\!\!\int_{S_4}\frac{\phi(\xi,\eta,0^+)}{R^3}\,da - \frac{1}{2\pi}\int_{S_5}\frac{1}{R}\frac{\partial\phi'(\xi,\eta,0^+)}{\partial\zeta}da -$$

$$\frac{\beta^2 z}{2\pi}\int_{S_5}\frac{\phi'(\xi,\eta,0^+)}{R^3}\,da \tag{58}$$

Since $\phi'(\xi,\eta,\zeta)$ is related to $\phi(\xi,\eta,\zeta)$ the only unknown in the preceding equation is $\phi(\xi,\eta,0^+)$. The region of integration S_5 becomes the part of the $z = 0$ plane (z negative) in the forward Mach cone from the point (x,y,z) obtained by reflecting the disturbing surface in the $z = 0$ plane (z positive) through the $z = 0$ plane (see fig. 10).

The problem being considered is one in which the normal derivatives of the potential function are known on two planes parallel to the x-axis and are intersecting at right angles. The point (x,y,z) has been restricted to positive values of y and z. For the present, consider the problem of finding the potential above the $z = 0$ plane when the derivative of the potential function with respect to z is known on the $z = 0$ plane, the derivative of the potential function with respect to y is discontinuous across the $y = 0$ plane, and the potential is zero a finite distance upstream of a given point. From equation (22), the potential for this problem is given by

$$\phi(x,y,z) = -\frac{1}{2\pi}\int_{S_0}\frac{1}{R}\,\Delta\frac{\partial\phi(\xi,0,\zeta)}{\partial\eta}da - \frac{1}{2\pi}\int_{S_1}\frac{1}{R}\frac{\partial\phi(\xi,\eta,0^+)}{\partial\zeta}da -$$

$$\frac{\beta^2 z}{2\pi}\,{}^{f}\!\!\int_{S_1}\frac{\phi(\xi,\eta,0^+)}{R^3}\,da \tag{59}$$

where S_0 is the part of the $y = 0$ plane above the $z = 0$ line inside the forward Mach cone from the point (x,y,z), and S_1 is the part of the $z = 0$ plane inside the forward Mach cone from the point (x,y,z). For positive values of y and z equation (59) reduces

to equation (58) if $\phi'(\xi,\eta,0^+)$ is assumed to be the true value of $\phi(\xi,\eta,0^+)$ when η is negative. Since in the original problem $\phi(\xi,\eta,\zeta)$ was not defined when η was negative, nothing is violated if it is now defined as being $\phi'(\xi,\eta,\zeta)$ in the region where η is negative and ζ is positive. The problem in which the normal derivative of the potential function is known on two planes parallel to the x-axis and intersecting at right angles has, therefore, been changed to the problem in which the derivative of the potential has a known discontinuity across the $y = 0$ plane (z positive) and the normal derivative of the potential is known on the $z = 0$ plane. Note that the potential function still remains undefined below the $z = 0$ plane.

Since the potential function is undefined below the $z = 0$ plane, it can now be defined so that the resulting potential function is symmetric with respect to the $z = 0$ plane. Defining the potential below the $z = 0$ plane so that

$$\phi(\xi,\eta,a) = \phi(\xi,\eta,-a)$$

yields the desired symmetry. The result of applying equation (46) to the region below the $z = 0$ plane inside the forward Mach cone from the point (x,y,z) is

$$\frac{1}{2\pi}\int_{S_4}\frac{1}{R}\frac{\partial\phi(\xi,\eta,0^+)}{\partial\zeta}da - \frac{\beta^2 z}{2\pi}\,{}^f\!\!\int_{S_4}\frac{\phi(\xi,\eta,0^+)}{R^3}\,da + \frac{1}{2\pi}\int_{S_5}\frac{1}{R}\frac{\partial\phi(\xi,\eta,0^+)}{\partial\zeta}da -$$

$$\frac{\beta^2 z}{2\pi}\,{}^f\!\!\int_{S_5}\frac{\phi(\xi,\eta,0^+)}{R^3}\,da + \frac{1}{\pi}\int_{S_6}\frac{1}{R}\frac{\partial\phi(\xi,0^+,\zeta)}{\partial\eta}da = 0 \tag{60}$$

where S_6 is the part of the $y = 0$ plane (z negative) inside the forward Mach cone from the point (x,y,z). In applying equation (46) to the region below the $z = 0$ plane, the surface S_1 had to be folded over the part of the $y = 0$ plane (z negative) across which $\partial\phi/\partial\eta$ was discontinuous in order to be able to apply equation (46) to this region. Equations (58) and (60) can be combined to yield

$$\phi(x,y,z) = -\frac{1}{\pi}\int_{S_3}\frac{1}{R}\frac{\partial\phi(\xi,0^+,\zeta)}{\partial\eta}da - \frac{1}{\pi}\int_{S_4}\frac{1}{R}\frac{\partial\phi(\xi,\eta,0^+)}{\partial\zeta}da -$$

$$\frac{1}{\pi}\int_{S_5}\frac{1}{R}\frac{\partial\phi(\xi,\eta,0^+)}{\partial\zeta}da - \frac{1}{\pi}\int_{S_6}\frac{1}{R}\frac{\partial\phi(\xi,0^+,\zeta)}{\partial\eta}da \tag{61}$$

Equation (61) contains only integrals of known expressions, and it is, therefore, the solution to the problem of two planes intersecting at right angles parallel to the x-axis where the normal derivative of the potential function is known on both planes. Figure 11 shows the cross section of the distribution of velocity normal to the surfaces for a problem as represented by equation (55) and its solution as given by equation (61). Note that $\frac{\partial\phi(\xi,\eta,0^+)}{\partial\zeta}$ (η negative) in S_5 is the reflection of $\frac{\partial\phi(\xi,\eta,0^+)}{\partial\zeta}$ in S_4 (η positive) across the $\eta = 0$ plane and that $\frac{\partial\phi(\xi,0^+,\zeta)}{\partial\eta}$ in S_6 (ζ negative) is the reflection of $\frac{\partial\phi(\xi,0^+,\zeta)}{\partial\eta}$ in S_3 (ζ positive) across the $\zeta = 0$ plane. This condition suggests that the result given by equation (61) could also be obtained by utilizing the concept of reflecting surfaces.

The mathematical derivation required for finding solutions to problems consisting of two planes parallel to the x-axis intersecting at various angles can be reduced by making use of the concept of the reflecting surfaces. For this reason, the result given by equation (61) is obtained by use of reflecting surfaces. The potential function can be separated into two parts, ϕ_1 and ϕ_2, satisfying the following boundary conditions on the disturbing surfaces:

$$\frac{\partial\phi_1(\xi,\eta,0^+)}{\partial\zeta} = \frac{\partial\phi(\xi,\eta,0^+)}{\partial\zeta}$$

$$\frac{\partial\phi_1(\xi,0^+,\zeta)}{\partial\eta} = 0$$

$$\frac{\partial\phi_2(\xi,\eta,0^+)}{\partial\zeta} = 0$$

$$\frac{\partial\phi_2(\xi,0^+,\zeta)}{\partial\eta} = \frac{\partial\phi(\xi,0^+,\zeta)}{\partial\eta}$$

A cross section of these boundary conditions is shown in figure 12. Only the potential function ϕ_1 is treated in detail since the boundary conditions for ϕ_1 and ϕ_2 are of the same type. The normal derivative of ϕ_1 is zero on the $\eta = 0$ plane; thus, the $\eta = 0$ plane can be considered as a reflecting plane. The potential function ϕ_1 is, therefore, the potential resulting from a distribution of $\frac{\partial\phi(\xi,\eta,0^+)}{\partial\zeta}$ which is symmetric with respect to the $\eta = 0$ line and has the value

of $\frac{\partial\phi_1(\xi,\eta,0^+)}{\partial\zeta}$ when η is positive. Figure 13 illustrates such a distribution. The problem of finding ϕ_1 has been reduced to a planar problem which can be solved by use of equation (50).

Equation (50) was obtained by defining the potential below the $z = 0$ plane so that the total potential function was symmetric with respect to the $z = 0$ plane. This result caused the derivative of the potential function with respect to z to be antisymmetric with respect to the $z = 0$ plane. Figure 14 illustrates the distribution of the normal derivative of the function across the $z = 0$ plane. The problem of evaluating the potential function ϕ_1 has been reduced to a planar problem. Similarly, the problem of evaluating the potential function ϕ_2 can be reduced to a planar problem. Figure 15 illustrates such a procedure. The original potential function is the sum of ϕ_1 and ϕ_2. Equation (61) follows from the preceding results for ϕ_1 and ϕ_2. The addition of ϕ_1 and ϕ_2 is illustrated by figure 16.

The concept of reflecting surfaces is now utilized to find the potential resulting from two disturbing surfaces parallel to the x-axis and intersecting at an angle of 45°. The axis is chosen so that the x-axis lies along the intersection of the disturbing surfaces and one of the disturbing surfaces lies in the $z = 0$ plane (see fig. 17). The potential function ϕ is divided into two parts, ϕ_1 and ϕ_2. The boundary conditions on ϕ_1 and ϕ_2 are similar to the corresponding potential functions used for the disturbing surfaces intersecting at 90°. Figure 18 illustrates the boundary conditions for ϕ_1 and ϕ_2. The surfaces on which the normal derivative of ϕ_1 is zero can be considered as a reflecting surface. This consideration leads to the same distribution of the normal derivative of ϕ_1 on the $\eta = 0$ plane as is given on the $\zeta = 0$ plane. Figure 19 illustrates such a distribution. The problem of finding ϕ_1 for two disturbing surfaces intersecting at 45° has been reduced to a problem of two surfaces intersecting at 90°. The solution of ϕ_1 can be obtained from equation (61). Figure 20 shows the surfaces across which the normal derivative of ϕ_1 is discontinuous. Since ϕ_1 and ϕ_2 have the same type of boundary conditions, then ϕ_2 has a solution as illustrated in figure 21. The original potential function ϕ is the sum of ϕ_1 and ϕ_2; therefore, ϕ can be found by considering surfaces of discontinuity as illustrated in figure 22. The potential function ϕ can be evaluated by use of equation (22), because no surfaces across which ϕ is discontinuous exist and the values of $\Delta\,\partial\phi/\partial n_h$ are known across all surfaces of discontinuity.

Another simple case of two disturbing surfaces parallel to the x-axis occurs when the surfaces intersect at an angle of 60°. The potential function ϕ is divided into two parts, ϕ_1 and ϕ_2. The boundary conditions on ϕ_1 and ϕ_2 are similar to the corresponding

functions used previously. Figure 23 shows a cross section of these boundary conditions. By use of a reflecting surface, the function ϕ_1 can be represented by the boundary conditions as shown in figure 24. The function ϕ_1 is undefined for 240° of the total angle around the x-axis. The function ϕ_1 is defined as shown in figure 25. Since no surfaces exist across which ϕ_1 is discontinuous, the function ϕ_1 can be evaluated by using equation (22). Similarly, ϕ_2 can be defined as shown in figure 26. The sum of ϕ_1 and ϕ_2 is illustrated by figure 27. The potential function ϕ can be found by using equation (22).

In the preceding paragraphs, methods have been found for determining the potential resulting from two plane disturbing surfaces parallel to the stream direction intersecting at certain angles. The same method can be used to find methods for determining the potential resulting from two plane disturbing surfaces intersecting at various other angles.

ROLLING TAILS WITH MULTIPLE RECTANGULAR FINS

The methods derived in the preceding section are used to find the surface velocity potential, the pressure distribution, and the damping in roll of rolling tails consisting of four, six, and eight rectangular fins. For comparison, these same quantities are also presented for the planar tail configurations consisting of one and two rectangular fins. An illustration of the tails treated is shown in figure 28. The analysis is limited to tail configurations having surfaces of vanishingly small thickness and of zero camber. The investigation is also limited to the range of Mach numbers for which the region of interference between the adjacent fins does not affect the fin tips.

Tail Consisting of One Fin

The pressure distribution and the velocity potential on the surface of rolling tails made up of one and two rectangular fins can be obtained from the results of reference 13. The pressure and potential for the tail consisting of only one fin can be found by transforming the axis of roll of the tail consisting of two rectangular fins.

The tail consisting of one fin is divided into regions as shown in figure 29(a). The velocity potential on the surface facing the negative y-direction is given by:

For region I,

$$\phi(x,z) = \frac{2p}{\pi}\left[\frac{xz}{\beta}\sin^{-1}\sqrt{\frac{\beta\left(\frac{b}{2} - z\right)}{x}} - \frac{1}{3}\left(\frac{2x}{3} - z - b\right)\sqrt{\left(\frac{b}{2} - z\right)\left(z + \frac{x}{\beta} - \frac{b}{2}\right)}\right] \tag{62a}$$

For region II,

$$\phi(x,z) = \frac{pxz}{\beta} \tag{62b}$$

For region III,

$$\phi(x,z) = \frac{2p}{\pi}\left[\frac{xz}{\beta}\sin^{-1}\sqrt{\frac{\beta z}{x}} + \frac{1}{3}\left(\frac{2x}{\beta} + z\right)\sqrt{z\left(\frac{x}{\beta} - z\right)}\right] \tag{62c}$$

For region IV (note that the potential in region IV is the potential in region I plus the potential in region III minus the potential in region II),

$$\phi(x,z) = \frac{2p}{\pi}\left[\frac{xz}{\beta}\sin^{-1}\sqrt{\frac{\beta z}{x}} + \frac{xz}{\beta}\sin^{-1}\sqrt{\frac{\beta\left(\frac{b}{2} - z\right)}{x}} + \frac{1}{3}\left(\frac{2x}{\beta} + z\right)\sqrt{z\left(\frac{x}{\beta} - z\right)} - \frac{1}{3}\left(\frac{2x}{\beta} - z - b\right)\sqrt{\left(\frac{b}{2} - z\right)\left(z - \frac{b}{2} + \frac{x}{\beta}\right)} - \frac{\pi xz}{2\beta}\right] \tag{62d}$$

The pressure-difference coefficient is given by:

For region I,

$$\Delta C_p = \frac{8p}{\pi\beta V}\left[z\sin^{-1}\sqrt{\frac{\beta\left(\frac{b}{2} - z\right)}{x}} - \sqrt{\left(\frac{b}{2} - z\right)\left(z - \frac{b}{2} + \frac{x}{\beta}\right)}\right] \tag{63a}$$

For region II,

$$\Delta C_p = \frac{4pz}{\beta V} \tag{63b}$$

For region III,

$$\Delta C_p = \frac{8p}{\pi\beta V}\left[z \sin^{-1}\sqrt{\frac{\beta z}{x}} + \sqrt{z\left(\frac{x}{\beta} - z\right)}\right] \tag{63c}$$

For region IV,

$$\Delta C_p = \frac{8p}{\pi\beta V}\left[z \sin^{-1}\sqrt{\frac{\beta\left(\frac{b}{2} - z\right)}{x}} + z \sin^{-1}\sqrt{\frac{\beta z}{x}} + \sqrt{z\left(\frac{x}{\beta} - z\right)} - \sqrt{\left(\frac{b}{2} - z\right)\left(z - \frac{b}{2} + \frac{x}{\beta}\right)} - \frac{\pi z}{2}\right] \tag{63d}$$

Tail Consisting of Two Fins

The tail consisting of two fins (fig. 29(b)) has the same potential and pressure distribution as a rectangular rolling wing and can, therefore, be obtained from the results of reference 13. For each tail consisting of two fins divided into regions as shown in figure 29(b) the pressure and potential in regions I and II are the same as the pressure and potentials in the corresponding regions for tails consisting of one fin.

Tail Consisting of Four Fins

Each fin of the tail consisting of four fins is divided into regions as shown in figure 29(c). The pressure and potentials in regions I and II are the same as the pressure and potentials in the corresponding regions for tails consisting of either one or two fins. The regions III and IV are affected by the interaction between adjacent fins. The potential in region IV is made up of a combination of the potentials of regions I, II, and III. Thus, the only real problem is the determination of the potential in region III.

The potential in region III is not affected by the tip and is, therefore, the same potential as would be obtained if the fins were infinitely long. With the coordinate axes chosen as shown in figure 28(c) the point (x,y,z) is restricted to values of y which are negative while the values of z are restricted to positive values. Note that for a tail with finitely long fins, the potential at a point (x,y,z) in the region of interaction is independent of the disturbances produced at points located so that their projection on the yz-plane does not lie in the second quadrant. The general method previously derived for finding the potential resulting from two plane surfaces intersecting at

right angles can thus be used to find the potential in the part of the region of interaction which is not affected by the tip.

The velocity component normal to the fin in the $z = 0$ plane is given by

$$\phi_z(x,y,0^+) = -py$$

and the velocity component normal to the fin in the $y = 0$ plane is given by

$$\phi_y(x,0^-,z) = pz$$

Figure 30 illustrates this type of normal-velocity distribution, and figure 31 illustrates a cross section of the surfaces of normal-velocity discontinuity, which previous results show can be used to obtain the potential in the part of the region of interaction which is not affected by the tips.

Note that in figure 32 the discontinuity in the normal velocity across the $z = 0$ plane is the same type as the discontinuity in the $y = 0$ plane. Thus, if the potential resulting from this type of discontinuity (see fig. 32) is known, then the potential resulting from any combination of discontinuities of this type can be found. The potential for this type of distribution is denoted by ϕ_0. By the use of cylindrical coordinates, as shown in figure 32, the potential at the point (x,ρ,θ) can be expressed in terms of ϕ_0 by

$$\phi(x,\rho,\theta) = \phi_0(x,\rho,\theta) - \phi_0\left(x,\rho,\theta - \frac{\pi}{2}\right) \tag{64}$$

Equation (64) follows from figures 31 and 32.

The potential function ϕ_0 was evaluated by use of equation (50) and is given by:

For $0 \leqq \theta \leqq \frac{\pi}{2}$,

$$\phi_0(x,\rho,\theta) = -\frac{p}{\pi\beta^2}\left[x\sqrt{x^2 - \beta^2\rho^2} + \beta^2\rho^2(1 - 2\cos^2\theta)\ln\frac{\beta\rho}{x + \sqrt{x^2 - \beta^2\rho^2}} + 2x\beta\rho\cos\theta\sin^{-1}\left(\frac{\beta\rho\cos\theta}{\sqrt{x^2 - \beta^2\rho^2\sin^2\theta}}\right) - 2\beta^2\rho^2\cos\theta\sin\theta\tan^{-1}\left(\frac{x\cot\theta}{\sqrt{x^2 - \beta^2\rho^2}}\right)\right] \tag{65a}$$

For $\frac{\pi}{2} \leqq \theta \leqq \pi$,

$$\phi_0(x,\rho,\theta) = -\frac{p}{\pi\beta^2}\left[x\sqrt{x^2 - \beta^2\rho^2} + \beta^2\rho^2(1 - 2\cos^2\theta)\ln\frac{\beta\rho}{x + \sqrt{x^2 - \beta^2\rho^2}} + 2x\beta\rho\cos\theta\sin^{-1}\left(\frac{\beta\rho\cos\theta}{\sqrt{x^2 - \beta^2\rho^2\sin^2\theta}}\right) + 2\beta^2\rho^2\sin\theta\cos\theta\tan^{-1}\left(\frac{x\cot\theta}{\sqrt{x^2 - \beta^2\rho^2}}\right)\right] \tag{65b}$$

From equations (64) and (65), the potential function in the region of interaction, which is not affected by the tips, is given by the following equation for $\frac{\pi}{2} \leqq \theta \leqq \pi$:

$$\phi(x,\rho,\theta) = -\frac{p}{\pi\beta^2}\left\{2\beta^2\rho^2(1 - 2\cos^2\theta)\ln\frac{\beta\rho}{x + \sqrt{x^2 - \beta^2\rho^2}} + 2x\beta\rho\left[\cos\theta\sin^{-1}\left(\frac{\beta\rho\cos\theta}{\sqrt{x^2 - \beta^2\rho^2\sin^2\theta}}\right) - \sin\theta\sin^{-1}\left(\frac{\beta\rho\sin\theta}{\sqrt{x^2 - \beta^2\rho^2\cos^2\theta}}\right)\right] + 2\beta^2\rho^2\cos\theta\sin\theta\left(\tan^{-1}\frac{x|\cot\theta|}{\sqrt{x^2 - \beta^2\rho^2}} - \tan^{-1}\frac{x|\tan\theta|}{\sqrt{x^2 - \beta^2\rho^2}}\right)\right\} \tag{66}$$

The potential in region III of the fin surface is a special case $\left(\theta = \frac{\pi}{2}\right)$ of the preceding equation. Thus, the potential in region III is given (in Cartesian coordinates) by

$$\phi(x,0^-,z) = \frac{2pz}{\pi\beta}\left(x\sin^{-1}\frac{\beta z}{x} - \beta z\ln\frac{\beta z}{x + \sqrt{x^2 - \beta^2 z^2}}\right) \tag{67}$$

From equation (67) the pressure-difference coefficient is found to be

$$\Delta C_p = \frac{8pz}{\pi V\beta} \sin^{-1} \frac{\beta z}{x} \tag{68}$$

As previously stated, the potential in region IV (see fig. 29) is a combination of the potentials in regions I, II, and III. Assume that the fins are infinitely long. In this case only two regions (II and III) exist since regions I and IV are affected by the tip. The effect of the tip can be taken into account by adding a potential which has zero normal velocity on the fin and the negative of the pressure of the infinite fin in the plane of the fin outboard of the tip. The value of such a potential on the fin is given by the difference between the potential of region I and the potential of region II. (This potential is only the effect of the tip on a semi-infinite rolling wing). Thus, the potential in region IV is the potential in region III plus the difference between the potential of region I and the potential of region II. Mathematically, the potential in region IV is given by

$$\phi(x,0^-,z) = \frac{2p}{\pi}\left[-\frac{xz}{\beta}\cos^{-1}\frac{\beta z}{x} + \frac{xz}{\beta}\sin^{-1}\sqrt{\frac{\beta\left(\frac{b}{2} - z\right)}{x}} - \frac{1}{3}\left(\frac{2x}{\beta} - z - b\right)\sqrt{\left(\frac{b}{2} - z\right)\left(z + \frac{x}{\beta} - \frac{b}{2}\right)} - z^2 \ln \frac{\beta z}{x + \sqrt{x^2 - \beta^2 z^2}}\right] \tag{69}$$

From equation (69) the pressure-difference coefficient is given by

$$\Delta C_p = \frac{8p}{\pi V\beta}\left[-z\cos^{-1}\frac{\beta z}{x} + z\sin^{-1}\sqrt{\frac{\beta\left(\frac{b}{2} - z\right)}{x}} - \sqrt{\left(\frac{b}{2} - z\right)\left(z - \frac{b}{2} + \frac{x}{\beta}\right)}\right] \tag{70}$$

Tail Consisting of Six Fins

The pressure and potentials on the surface of the tail consisting of six fins can be obtained in a manner similar to that used for the tail consisting of four fins. The pressure and potentials in regions I and II are the same as the pressure and potentials in the corresponding regions for tails consisting of one, two, or four fins. Regions III and IV are affected by the interaction between adjacent fins. The potential in region IV is made up of a combination of the potential in regions I, II, and III; therefore, the main problem, as for the case of four fins, is the determination of the potential in region III.

The potential in region III is the same as the potential for a tail consisting of six infinitely long fins. The induced velocities normal to two of the planes of the fins are illustrated in figure 33. For two plane surfaces parallel to the stream direction and intersecting at an angle of 60°, the potential in region III can be obtained by a distribution of discontinuities in velocity as illustrated in figure 34. Note that the potential in region III can be made up of a combination of the potentials from a velocity discontinuity as shown in figure 35. The potential from this type of discontinuity is denoted by ϕ_0. By use of cylindrical coordinates as shown in figure 35, the potential at the point (x,ρ,θ) can be expressed in terms of ϕ_0 by

$$\phi(x,\rho,\theta) = \phi_0\left(x,\rho,\theta - \frac{\pi}{6}\right) - \phi_0\left(x,\rho,\theta - \frac{\pi}{2}\right) - \phi_0\left(x,\rho,\theta + \frac{\pi}{6}\right) \tag{71}$$

Equation (71) follows from figures 34 and 35.

The potential function ϕ_0 was evaluated by use of equation (50) and is given by the following equation for $0 \leqq \theta \leqq \pi$:

$$\phi_0(x,\rho,\theta) = -\frac{p\rho \cos\theta}{\beta}(x - \beta\rho \sin\theta) \tag{72}$$

From equations (71) and (72) the potential function in the region of interaction, which is not affected by the tips, is given by the following equation for $\frac{\pi}{2} \leqq \theta \leqq \frac{5\pi}{6}$:

$$\phi(x,\rho,\theta) = \frac{p\rho^2}{2}\left[\sqrt{3}(1 - 2\cos^2\theta) + 2\cos\theta \sin\theta\right] \tag{73}$$

The potential in region III of the fin surface is a special case $\left(\theta = \frac{\pi}{2}\right)$ of equation (73). The potential in this region is given (in Cartesian coordinates) by

$$\phi(x,0^-,z) = \frac{pz^2\sqrt{3}}{2} \tag{74}$$

From equation (74) the pressure-difference coefficient in region III is found to be zero.

The potential in region IV is a combination of the potentials in regions I, II, and III; this can be shown in the same way as the potential in region IV of the tail consisting of four fins was shown to be a combination of potentials from other regions. Specifically, the

potential in region IV for the tail consisting of six fins is the potential in region III plus the difference between the potentials of region I and of region II. Mathematically, the potential in region IV is given by

$$\phi(x,0^-,z) = \frac{2p}{\pi}\left[\frac{\pi z^2\sqrt{3}}{4} - \frac{xz}{\beta}\cos^{-1}\sqrt{\frac{\beta\left(\frac{b}{2} - z\right)}{x}} - \frac{1}{3}\left(\frac{2x}{\beta} - z - b\right)\sqrt{\left(\frac{b}{2} - z\right)\left(z + \frac{x}{\beta} - \frac{b}{2}\right)}\right] \tag{75}$$

From equation (75) the pressure-difference coefficient is given by

$$\Delta C_p = -\frac{8p}{\pi\beta V}\left[z\cos^{-1}\sqrt{\frac{\beta\left(\frac{b}{2} - z\right)}{x}} + \sqrt{\left(\frac{b}{2} - z\right)\left(z - \frac{b}{2} + \frac{x}{\beta}\right)}\right] \tag{76}$$

Tail Consisting of Eight Fins

The pressure and potential on the surface of the tail consisting of eight fins can be found by utilizing the potential functions ϕ_0 used in finding the pressure and potentials on the surface of the tail consisting of four and six fins. The pressure and potentials in regions I and II are the same as the pressure and potentials for the corresponding regions of the other tails. The potentials in regions III, IV, V, and VI (see fig. 29(e)) are affected by the interaction between adjacent fins. Since the potentials in regions V and VI are combinations of the potentials in the remaining regions, the main problem is to find the potentials in regions III and IV.

The potentials in regions III and IV are the same as the potential for a tail of eight infinitely long fins. The induced velocity normal to two of the planes of the fins is illustrated in figure 36. From the results for two plane surfaces intersecting at an angle of 45°, the potentials in regions III and IV can be obtained by a distribution of discontinuities in velocity as illustrated in figure 37. The potential resulting from the distribution of discontinuities in velocity as illustrated in figure 37 can be obtained from a distribution of discontinuities as possessed by the potential function ϕ_0 used in connection with the four-finned tail. The potential function ϕ_0 used in connection with the four-finned tail was evaluated only in the region affected by the root sections of the fins. For the case of the eight-finned tail, interaction occurs between adjacent fins in regions which are not affected by the root sections of the fins. The potential function ϕ_0 of the four-finned tail in the region not affected by the root

section must be known. In this region, the potential functions ϕ_0 for the four- and six-finned tails are the same.

From figures 32 and 37 the potential function in the region of fin interaction which is affected by the root sections of the fins is, for $\frac{\pi}{2} \leqq \theta \leqq \frac{3\pi}{4}$,

$$\phi(x,\rho,\theta) = -\phi_0(x,\rho,\theta) + \phi_0\left(x,\rho,\theta - \frac{\pi}{4}\right) - \phi_0\left(x,\rho,\theta - \frac{\pi}{2}\right) + \phi_0\left(x,\rho,\theta + \frac{\pi}{4}\right) \tag{77}$$

where ϕ_0 is given by equations (65).

The potential in the part of the region of interaction which is affected by the root section is (from equations (65) and (77)), for $\frac{\pi}{2} \leqq \theta \leqq \frac{3\pi}{4}$,

$$\begin{aligned}
\phi(x,\rho,\theta) = -\frac{2p\rho}{\pi\beta}\Bigg\{ & -x \cos\theta \sin^{-1} \frac{\beta\rho \cos\theta}{\sqrt{x^2 - \beta^2\rho^2 \sin^2\theta}} + \\
& x \cos\left(\theta - \frac{\pi}{4}\right)\sin^{-1} \frac{\beta\rho \cos\left(\theta - \frac{\pi}{4}\right)}{\sqrt{x^2 - \beta^2\rho^2 \sin^2\left(\theta - \frac{\pi}{4}\right)}} - \\
& x \sin\theta \sin^{-1} \frac{\beta\rho \sin\theta}{\sqrt{x^2 - \beta^2\rho^2 \cos^2\theta}} + \\
& x \cos\left(\theta + \frac{\pi}{4}\right)\sin^{-1} \frac{\beta\rho \cos\left(\theta + \frac{\pi}{4}\right)}{\sqrt{x^2 - \beta^2\rho^2 \sin^2\left(\theta + \frac{\pi}{4}\right)}} - \\
& \beta\rho \sin\theta \cos\theta \left[\tan^{-1} \frac{x\left|\cot\theta\right|}{\sqrt{x^2 - \beta^2\rho^2}} + \tan^{-1} \frac{x\left|\cot\left(\theta + \frac{\pi}{4}\right)\right|}{\sqrt{x^2 - \beta^2\rho^2}}\right] - \\
& \frac{\beta\rho}{2}(1 - 2\cos^2\theta)\left[\tan^{-1} \frac{x\left|\cot\left(\theta - \frac{\pi}{4}\right)\right|}{\sqrt{x^2 - \beta^2\rho^2}} + \tan^{-1} \frac{x\left|\cot\left(\theta + \frac{\pi}{4}\right)\right|}{\sqrt{x^2 - \beta^2\rho^2}}\right]\Bigg\}
\end{aligned} \tag{78}$$

The potential in region III is a special case $\left(\theta = \frac{\pi}{2}\right)$ of equation (78). Setting $\theta = \frac{\pi}{2}$ in equation (78) yields (in Cartesian coordinates)

$$\phi(x,0^-,z) = \frac{2pz}{\pi\beta}\left(x \sin^{-1} \frac{\beta z}{x} - x\sqrt{2} \sin^{-1} \frac{\beta z}{\sqrt{2x^2 - \beta^2 z^2}} + \beta z \tan^{-1} \frac{x}{\sqrt{x^2 - \beta^2 z^2}}\right) \tag{79}$$

From equation (79) the pressure-difference coefficient is found to be given by

$$\Delta C_p = \frac{8pz}{\pi\beta V}\left(\sin^{-1} \frac{\beta z}{x} - \sqrt{2} \sin^{-1} \frac{\beta z}{\sqrt{2x^2 - \beta^2 z^2}}\right) \tag{80}$$

By inspection of figures (35) and (37) the potential function in the region of fin interaction, which is not affected by the root sections of the fins, is, for $\frac{\pi}{2} \leqq \theta \leqq \frac{3\pi}{4}$,

$$\phi(x,\rho,\theta) = \phi_0(x,\rho,\theta) + \phi_0\left(x,\rho,\theta - \frac{\pi}{4}\right) - \phi_0\left(x,\rho,\theta - \frac{\pi}{2}\right) - \phi_0\left(x,\rho,\theta - \frac{3\pi}{4}\right) \tag{81}$$

where ϕ_0 is given by equation (72). Substituting equation (72) into equation (81) yields (remember that ϕ_0 is zero upstream of the Mach cone from the y-axis), for $\frac{\pi}{2} \leqq \theta \leqq \frac{3\pi}{4}$,

$$\begin{aligned}\phi(x,\rho,\theta) = {} & \frac{p\rho x}{\beta}\left[\left(1 - \frac{1}{\sqrt{2}}\right)\sin \theta + \frac{\cos \theta}{\sqrt{2}}\right] + \\ & p\rho^2 \cos \theta \sin \theta - \frac{p\rho^2}{2}(1 - 2 \sin^2\theta) - \\ & \frac{p\rho}{\beta\sqrt{2}}(\cos \theta + \sin \theta)\begin{bmatrix} 0; \text{ if } x < \frac{\beta\rho}{\sqrt{2}}(\sin \theta - \cos \theta) \\ x - \frac{\beta\rho}{\sqrt{2}}(\sin \theta - \cos \theta); \text{ if } x > \frac{\beta\rho}{\sqrt{2}}(\sin \theta - \cos \theta) \end{bmatrix} - \\ & \frac{p\rho}{\beta} \cos \theta \begin{bmatrix} 0; \text{ if } x < \beta\rho \sin \theta \\ x - \beta\rho \sin \theta; \text{ if } x > \beta\rho \sin \theta \end{bmatrix}\end{aligned} \tag{82}$$

The potential in region IV is a special case $\left(\theta = \frac{\pi}{2}\right)$ of equation (82). Setting $\theta = \frac{\pi}{2}$ in equation (82) yields (in Cartesian coordinates)

$$\phi(x,0^-,z) = \frac{pz}{\beta}\left[(1 - \sqrt{2})x + \beta z\right] \tag{83}$$

From equation (83) the pressure-difference coefficient is found to be given by

$$\Delta C_p = \frac{4pz}{\beta x}(1 - \sqrt{2}) \tag{84}$$

The potential in region V is the potential in region IV plus the difference between the potential in region I and the potential in region II; thus, from equations (62a), (62b), and (83), the potential in region V is found to be given by

$$\phi(x,0^-,z) = \frac{2p}{\pi}\left[\frac{\pi z}{2}\left(z - \frac{x\sqrt{2}}{\beta}\right) + \frac{xz}{\beta}\sin^{-1}\sqrt{\frac{\beta\left(\frac{b}{2} - z\right)}{x}} - \frac{1}{3}\left(\frac{2x}{3} - z - b\right)\sqrt{\left(\frac{b}{2} - z\right)\left(z + \frac{x}{\beta} - \frac{b}{2}\right)}\right] \tag{85}$$

From equation (85) the pressure-difference coefficient is found to be given by

$$\Delta C_p = -\frac{8p}{\pi\beta V}\left[\frac{\pi z}{\sqrt{2}} - z\sin^{-1}\sqrt{\frac{\beta\left(\frac{b}{2} - z\right)}{x}} + \sqrt{\left(\frac{b}{2} - z\right)\left(z - \frac{b}{2} + \frac{x}{\beta}\right)}\right] \tag{86}$$

The potential in region VI is the potential in region III plus the difference between the potential in region I and the potential in region II; thus, from equations (62a), (62b), and (79), the potential in region VI is found to be given by

$$\phi(x,0^-,z) = \frac{2pz}{\pi\beta}\left[-x\cos^{-1}\frac{\beta z}{x} - x\sqrt{2}\sin^{-1}\frac{\beta z}{\sqrt{2x^2 - \beta^2 z^2}} + \beta z\tan^{-1}\frac{x}{\sqrt{x^2 - \beta^2 z^2}} + xz\sin^{-1}\sqrt{\frac{\beta\left(\frac{b}{2} - z\right)}{x}} - \frac{\beta}{3}\left(\frac{2x}{\beta} - z - \frac{b}{2}\right)\sqrt{\left(\frac{b}{2} - z\right)\left(z + \frac{x}{\beta} - \frac{b}{2}\right)}\right] \tag{87}$$

From equation (87), the pressure-difference coefficient in region VI is found to be given by

$$\Delta C_p = -\frac{8p}{\pi\beta V}\left[z \cos^{-1}\frac{\beta z}{x} + z\sqrt{2}\sin^{-1}\frac{\beta z}{\sqrt{2x^2 - \beta^2 z^2}} - z \sin^{-1}\sqrt{\frac{\beta\left(\frac{b}{2} - z\right)}{x}} + \sqrt{\left(\frac{b}{2} - z\right)\left(z - \frac{b}{2} + \frac{x}{\beta}\right)}\right] \tag{88}$$

Discussion of Results for Rolling Tails

Illustrative plots of the chordwise and spanwise pressure distributions across one fin for tails with various numbers of fins are shown in figure 38. Figure 39 shows illustrative plots of the spanwise loadings on one fin for tails made up of various numbers of fins.

The potential function ϕ_0 used in finding the pressures and potentials for the tails consisting of four, six, and eight fins could be used in finding pressures and potentials for tails consisting of any even number of fins provided that the region of interaction between adjacent fins does not affect the tip. The restriction on the region of interaction causes the range of validity to decrease as the number of fins is increased. The range of validity could be extended, however, by use of a pressure or potential cancellation method such as given in references 14 and 15.

From the potential, the damping in roll per fin was calculated. Table I presents the results of these calculations. Figure 40 presents the variation of the damping in roll per fin with $A\beta$ for tails made up of various numbers of fins. For a given Mach number (β constant), figure 40 shows the variation of the damping with aspect ratio. Figure 41 presents the variation of the damping in roll per fin with Mach number for tails consisting of various numbers of fins with a fin aspect ratio of 1.5.

Langley Aeronautical Laboratory
National Advisory Committee for Aeronautics
Langley Field, Va., October 25, 1951

REFERENCES

1. Ursell, F., and Ward, G. N.: On Some General Theorems in the Linearized Theory of Compressible Flow. Quarterly Jour. Mech. and Appl. Math., vol. III, pt. 3, Sept. 1950, pp. 326-348.

2. Robinson, A.: On Source and Vortex Distributions in the Linearized Theory of Steady Supersonic Flow. Rep. No. 9, College of Aero., Cranfield (British), Oct. 1947.

3. Phillips, H. B.: Vector Analysis. John Wiley & Sons, Inc., 1933.

4. Hadamard, Jacques: Lectures on Cauchy's Problem in Linear Partial Differential Equations. Yale Univ. Press (New Haven), 1923.

5. Puckett, Allen E.: Supersonic Wave Drag of Thin Airfoils. Jour. Aero. Sci., vol. 13, no. 9, Sept. 1946, pp. 475-484.

6. Heaslet, Max. A., and Lomax, Harvard: The Use of Source-Sink and Doublet Distributions Extended to the Solution of Boundary-Value Problems in Supersonic Flow. NACA Rep. 900, 1948. (Formerly NACA TN 1515.)

7. Martin, J. C.: Retarded Potentials of Supersonic Flow. Quarterly Applied Math., vol. VIII, no.4, Jan. 1951, pp. 358-364.

8. Kellogg, Oliver Dimon: Foundations of Potential Theory. Frederick Ungar Publishing Co. (New York), 1929.

9. Miller, Frederic H.: Partial Differential Equations. John Wiley & Sons, Inc., 1941.

10. Lomax, Harvard, Heaslet, Max. A., and Fuller, Franklyn B.: Formulas for Source, Doublet, and Vortex Distributions in Supersonic Wing Theory. NACA TN 2252, 1950.

11. Bleviss, Zegmund O.: Some Roll Characteristics of Cruciform Delta Wings at Supersonic Speeds. Preprint of paper presented at Annual Summer Meeting, Inst. Aero. Sci. (Los Angeles), July 12, 1950.

12. Ribner, Herbert S.: Damping in Roll of Cruciform and Some Related Delta Wings at Supersonic Speeds. NACA TN 2285, 1951.

13. Harmon, Sidney M.: Stability Derivatives at Supersonic Speeds of Thin Rectangular Wings with Diagonals ahead of Tip Mach Lines. NACA Rep. 925, 1949. (Formerly NACA TN 1706.)

14. Goodman, Theodore R.: The Lift Distribution on Conical and Nonconical Flow Regions of Thin Finite Wings in a Supersonic Stream. Jour. Aero. Sci., vol. 16, no. 6, June 1949, pp. 365-374.

15. Mirels, Harold: Lift-Cancellation Technique in Linearized Supersonic-Wing Theory. NACA TN 2145, 1950.

TABLE I

DAMPING-IN-ROLL COEFFICIENT PER FIN

Number of fins	βC_{l_p} per fin	Valid for
1	$-\frac{1 + 4A\beta - 24A^2\beta^2 + 32A^3\beta^3}{24A^3\beta^3}$	$A\beta \geqq 1$
2	$-\frac{1 + 8A\beta - 48A^2\beta^2 + 64A^3\beta^3}{48A^3\beta^3}$	$A\beta \geqq \frac{1}{2}$
4	$-\frac{4}{\pi A^3\beta^3}\left[-\frac{1}{9} + \frac{\pi}{192}\left(1 + 8A\beta - 48A^2\beta^2 + 64A^3\beta^3\right)\right]$	$A\beta \geqq 1$
6	$-\frac{4}{A^3\beta^3}\left[-\frac{2}{9\sqrt{3}} + \frac{1}{192}\left(1 + 8A\beta - 48A^2\beta^2 + 64A^3\beta^3\right)\right]$	$A\beta \geqq \frac{2}{\sqrt{3}}$
8	$-\frac{4}{A^3\beta^3}\left[-\frac{4}{9\pi} - \frac{1}{6} + \frac{1}{192}\left(1 + 8A\beta - 48A^2\beta^2 + 64A^3\beta^3\right)\right]$	$A\beta \geqq \sqrt{2}$

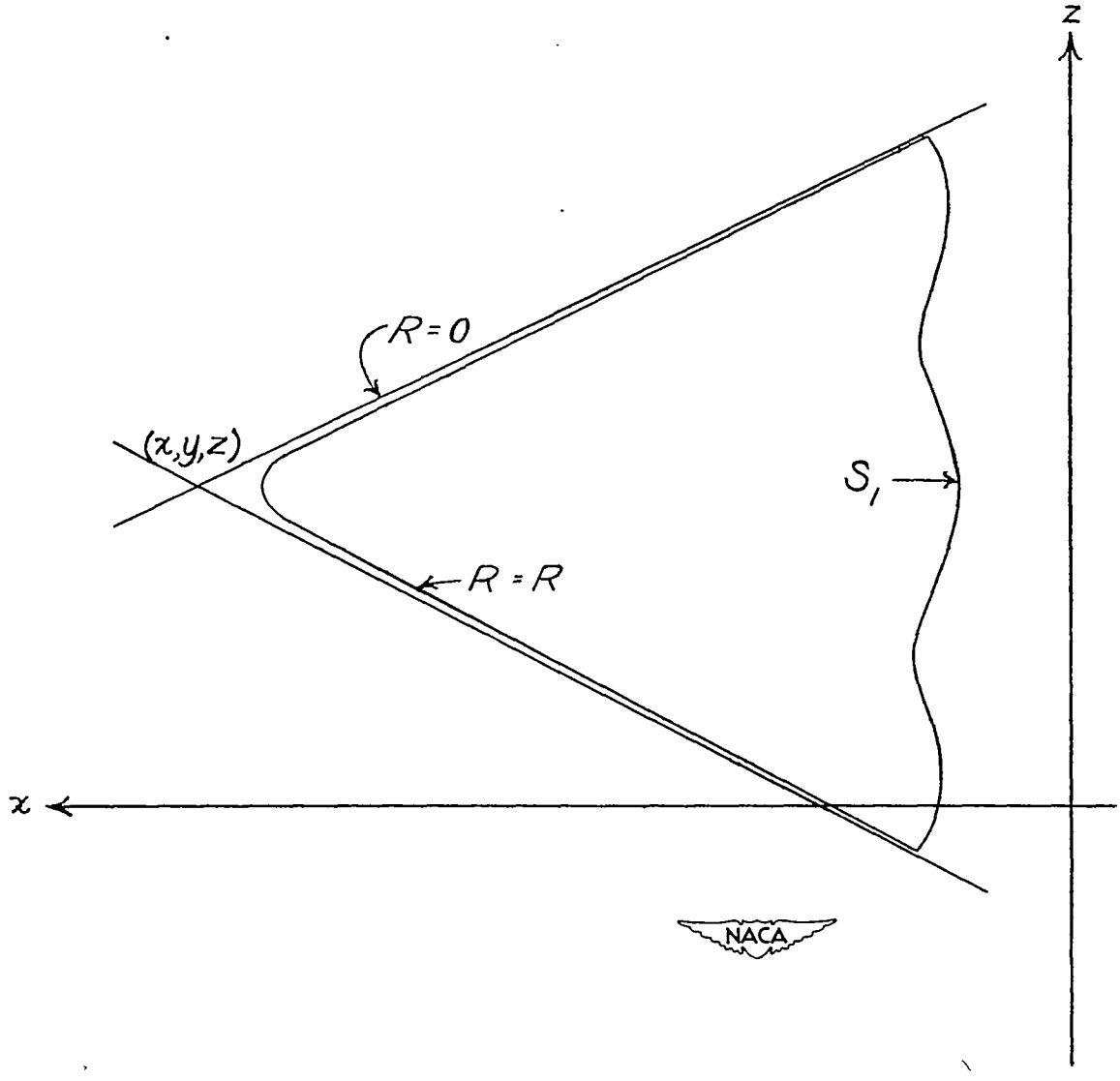

Figure 1.- Cross section of the region of integration used in connection with equation (9).

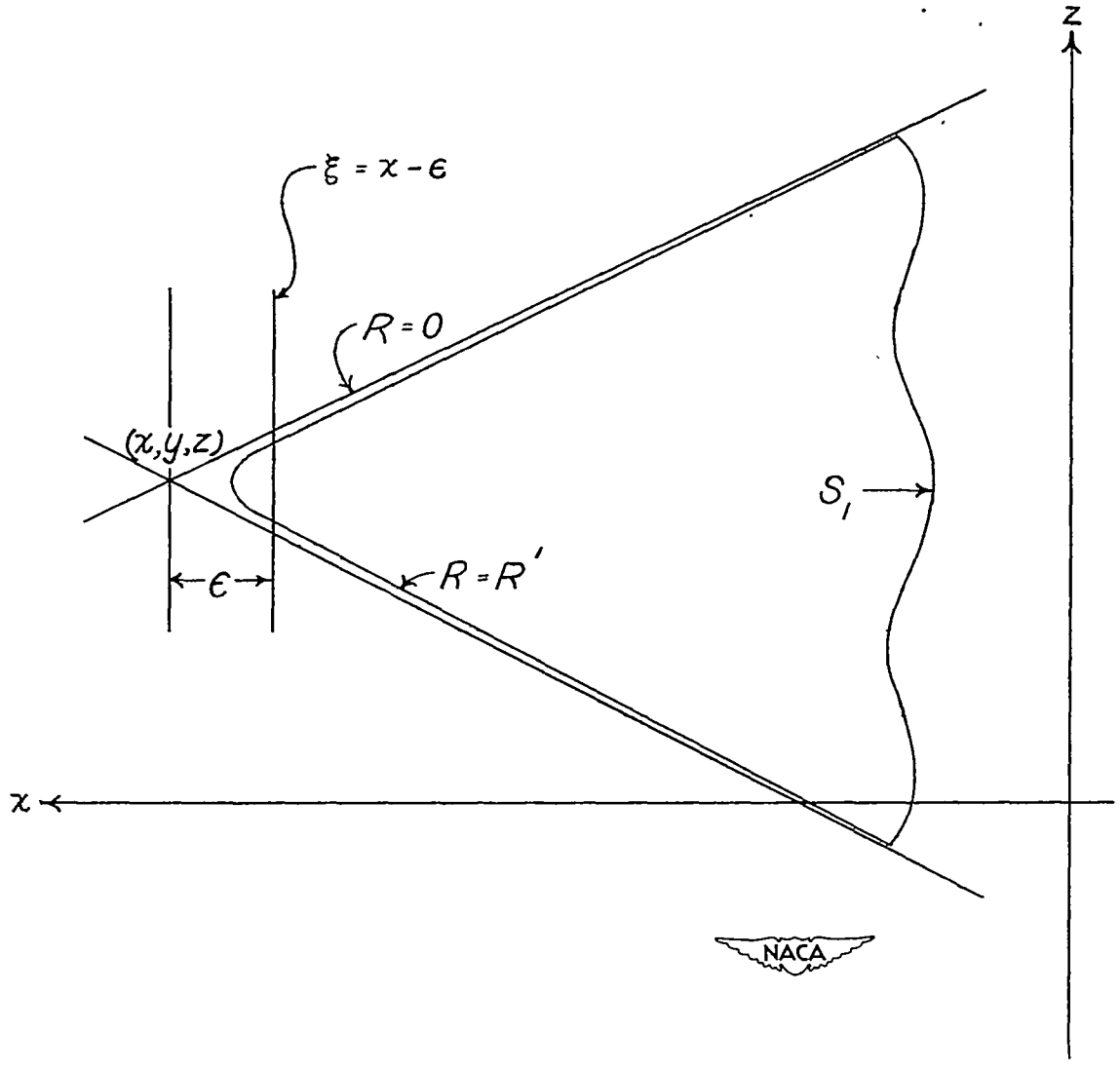

Figure 2.- Cross section of the region of integration used in connection with equation (14).

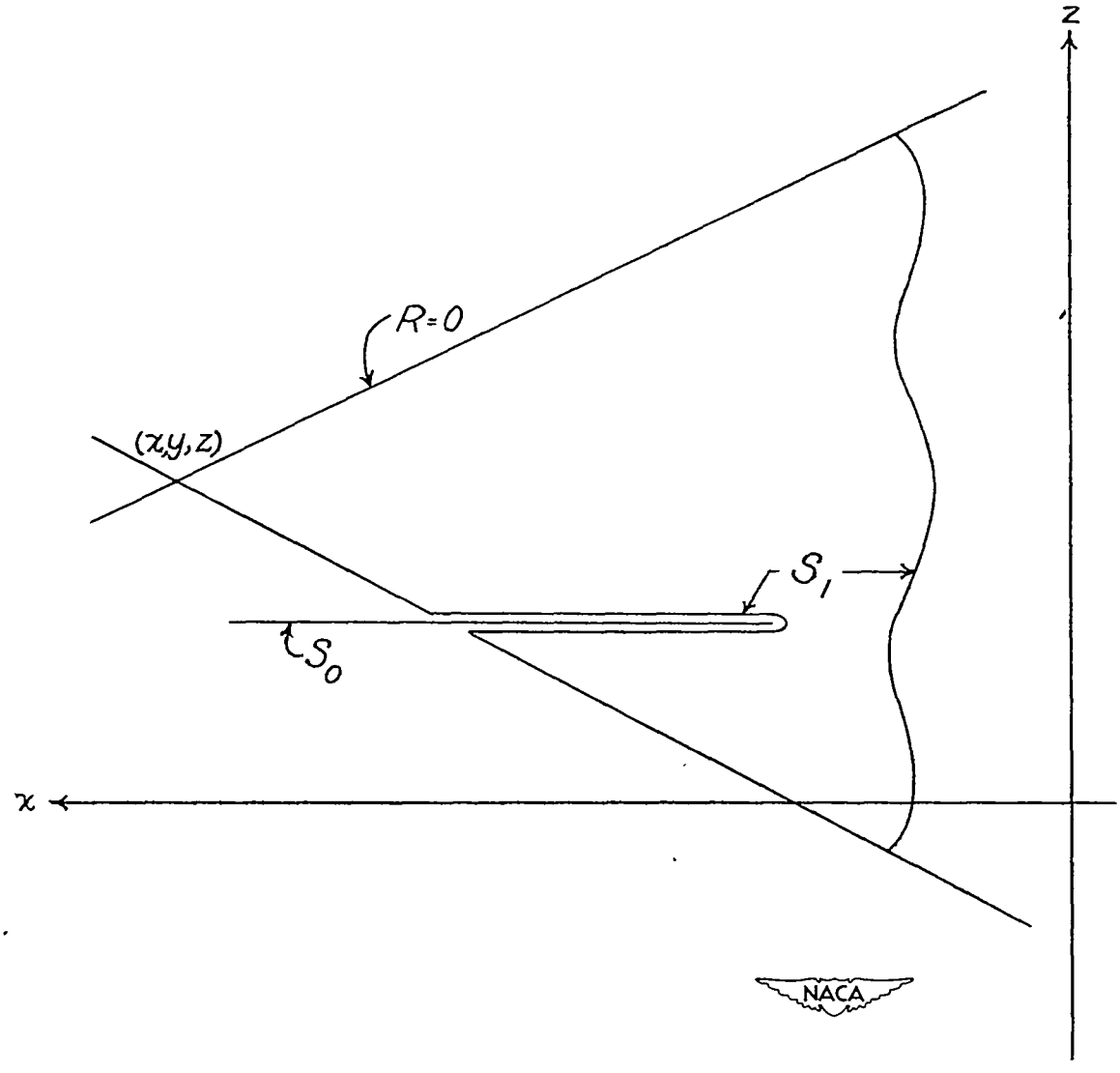

Figure 3.- A cross section of the region in the forward Mach cone from the point (x,y,z) showing the surface S_1 enveloping a surface of discontinuity S.

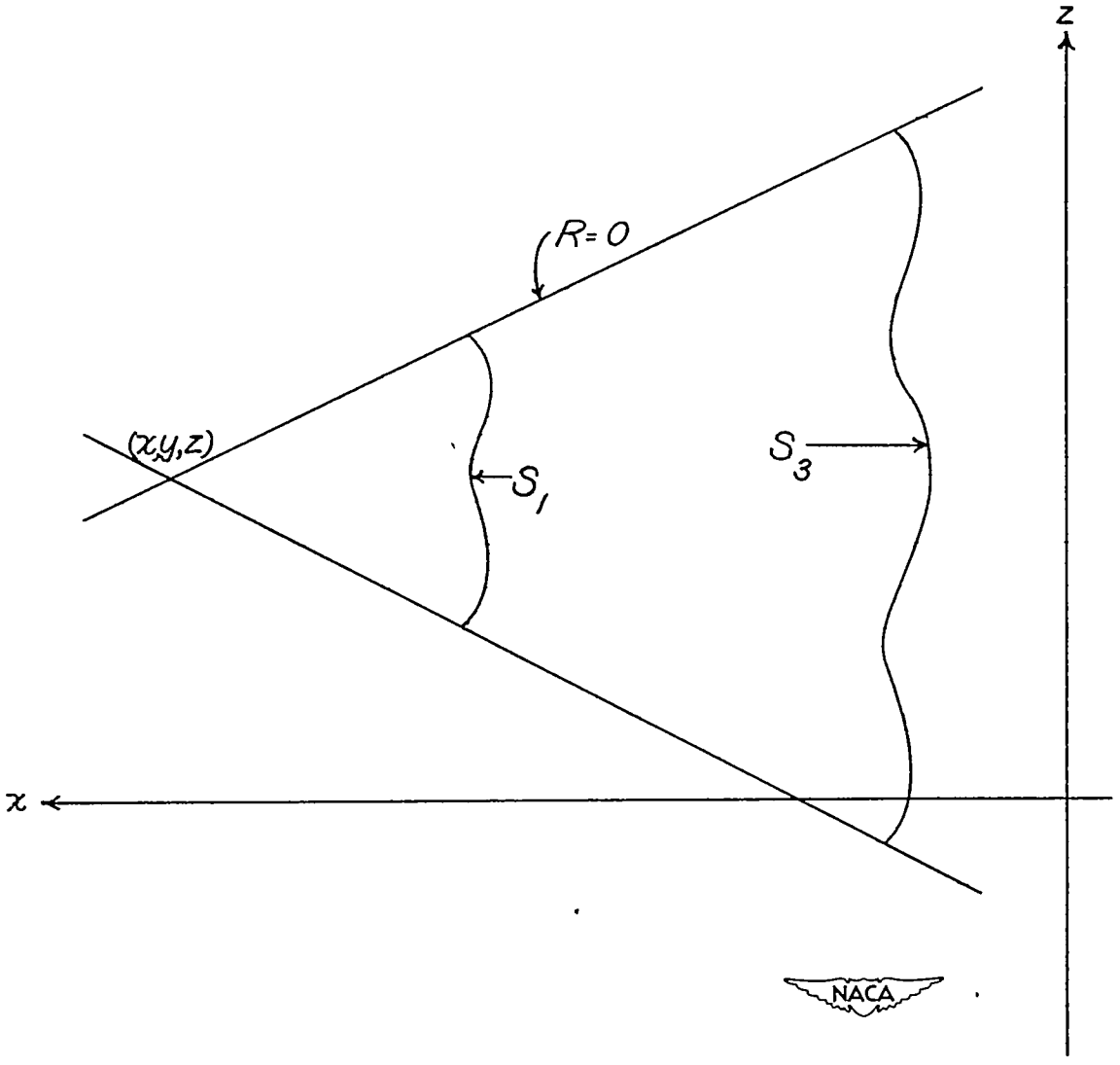

Figure 4.- Cross section of the region of integration used in connection with the potential function ϕ'.

(a) Subsonic element within infinitesimal strip.

(b) Broken line replacing line element.

Figure 5.- An illustration of a method of replacing a subsonic line element with a broken line made up of supersonic segments.

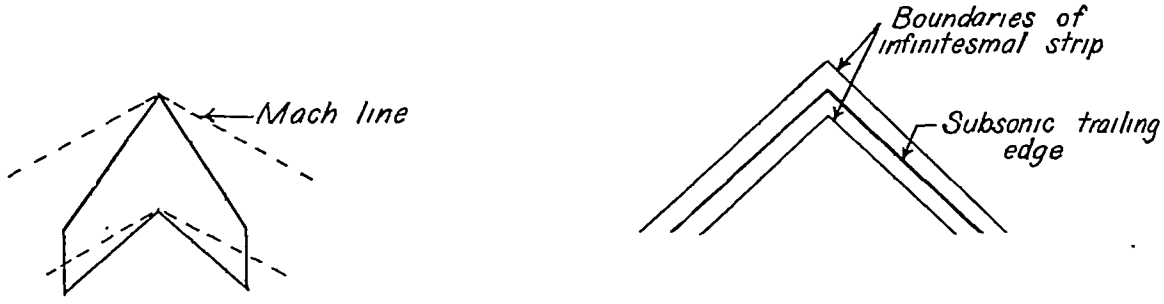

(a) Wing with subsonic edge.

(b) Line element at a break in a subsonic trailing edge.

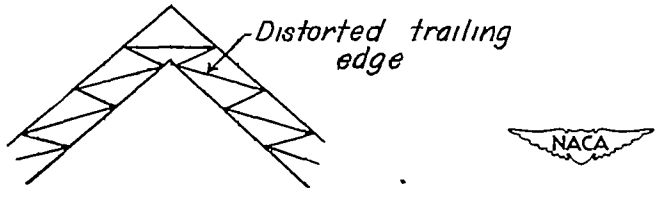

(c) Possible distortion of a subsonic trailing edge at a break in a subsonic trailing edge.

Figure 6.- Methods of distorting a subsonic trailing edge to determine the potential function uniquely.

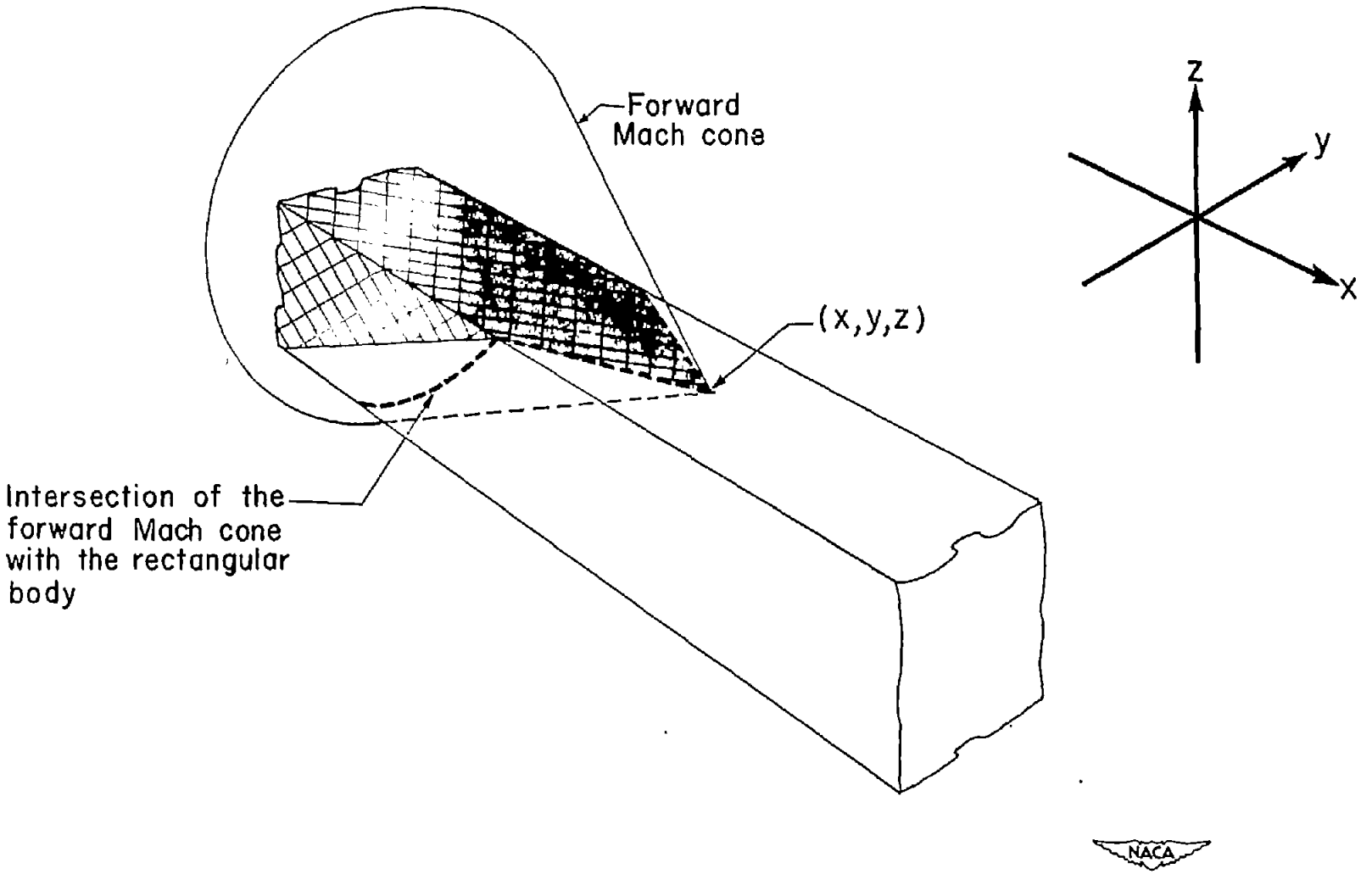

(a) The forward Mach cone from a point on the upper surface of a rectangular body.

Figure 7.- Rectangular body parallel to free-stream direction.

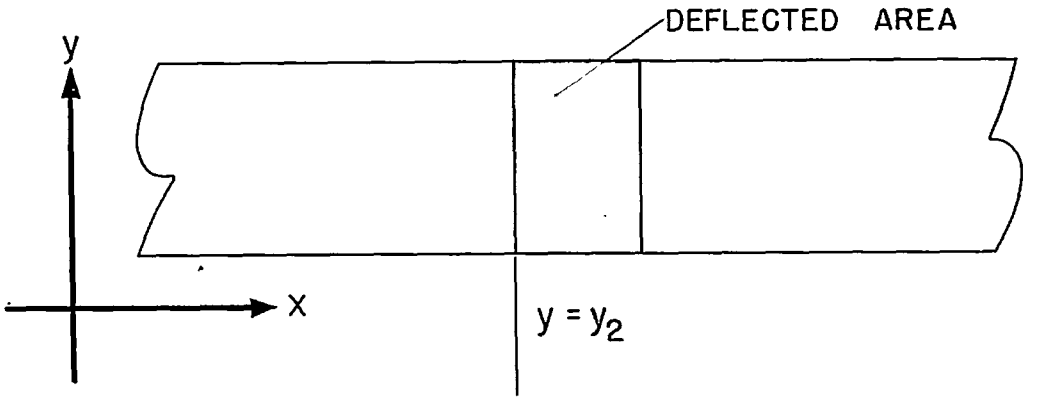

(b) Bottom view of rectangular body with deflected area on the lower surface.

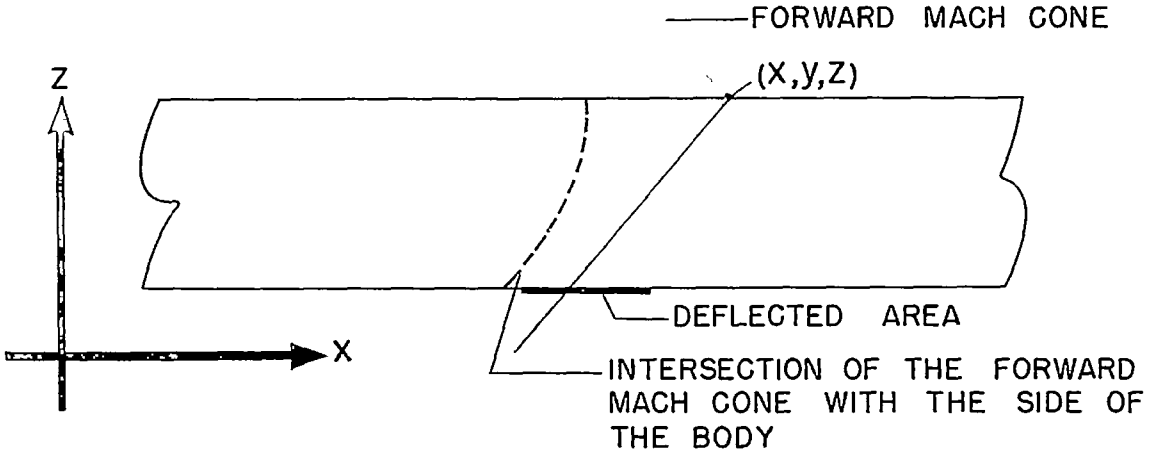

(c) Side view of rectangular body and the forward Mach cone from the point (x,y,z).

Figure 7.- Concluded.

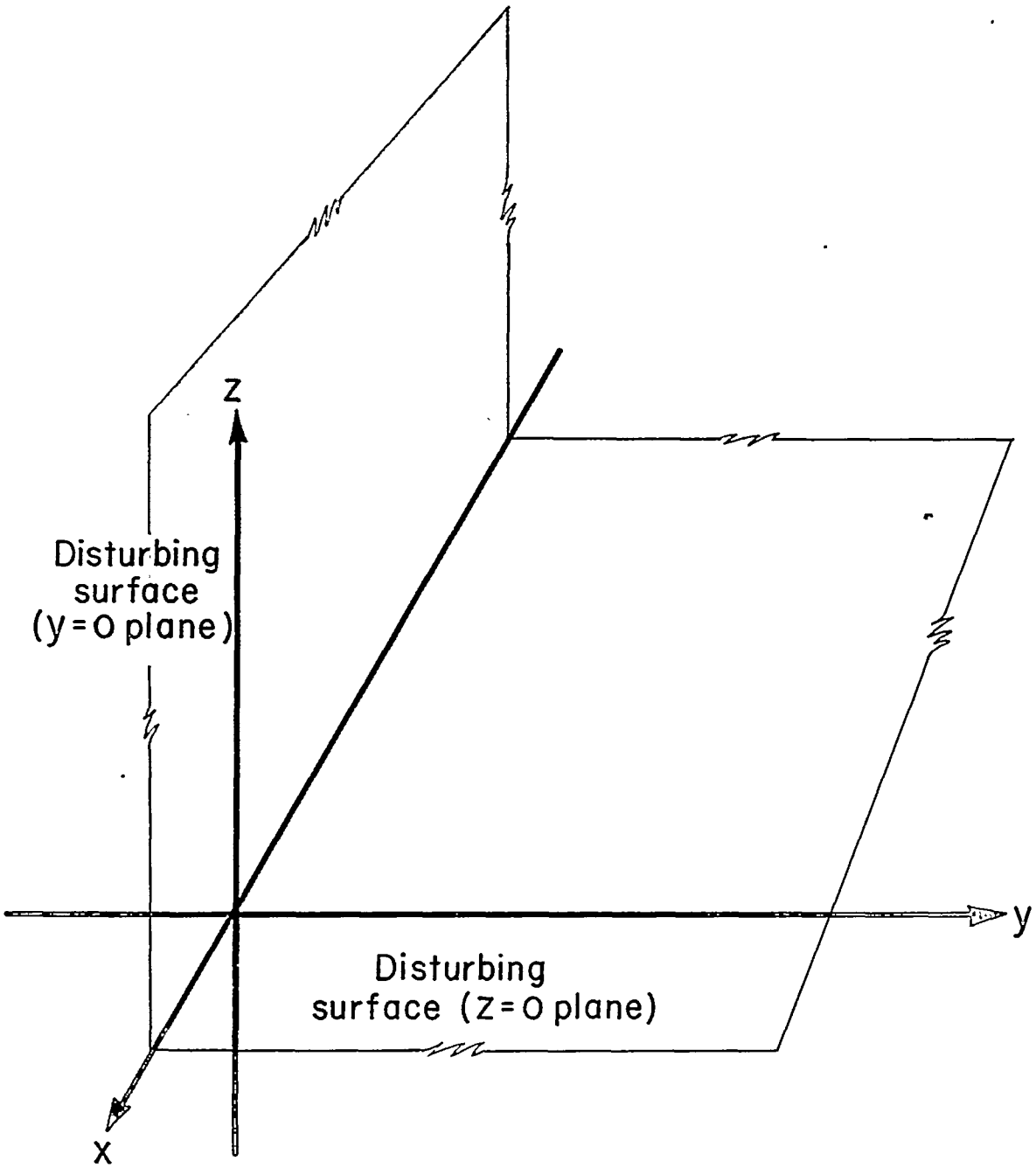

Figure 8.- Two disturbing surfaces intersecting at right angles.

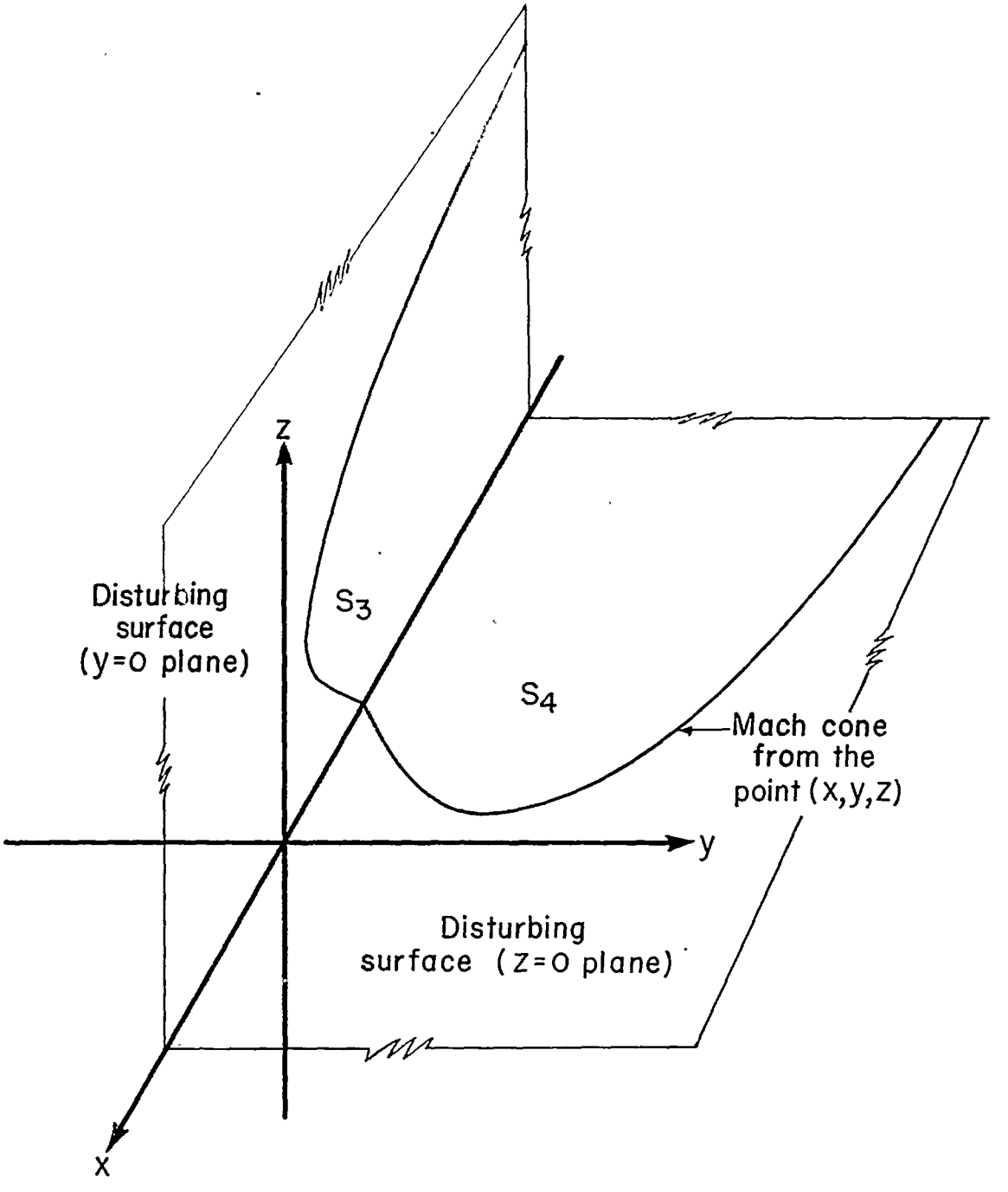

Figure 9.- Regions of integration for equation (55).

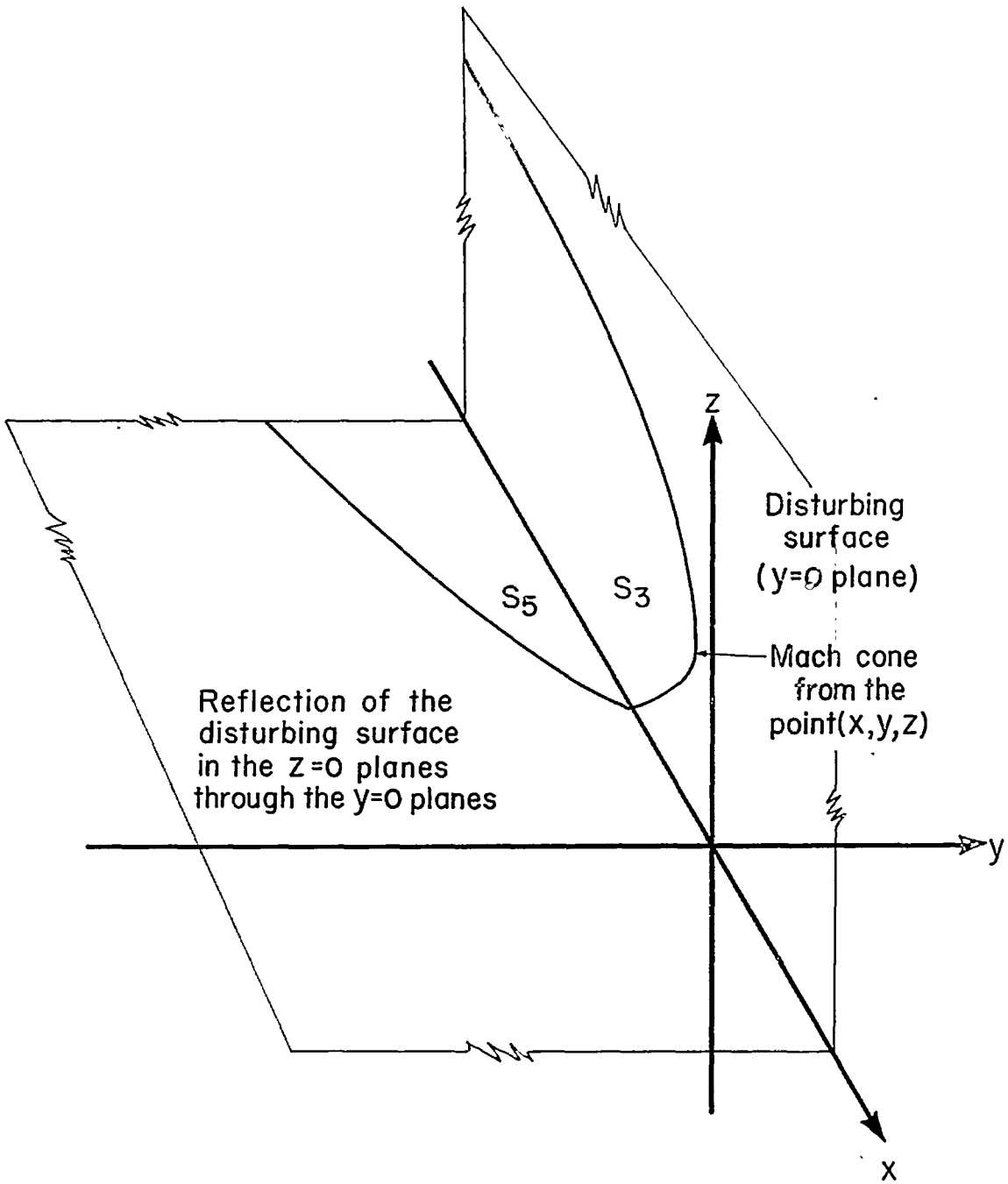

Figure 10.- Regions of integration for equation (56).

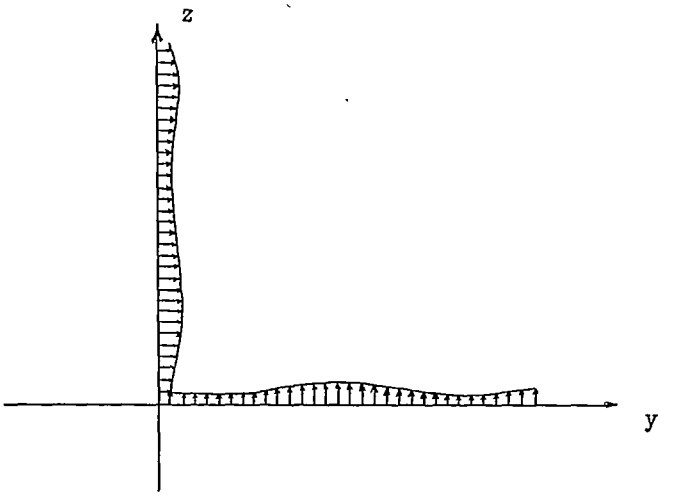

(a) Original problem (equation (55)).

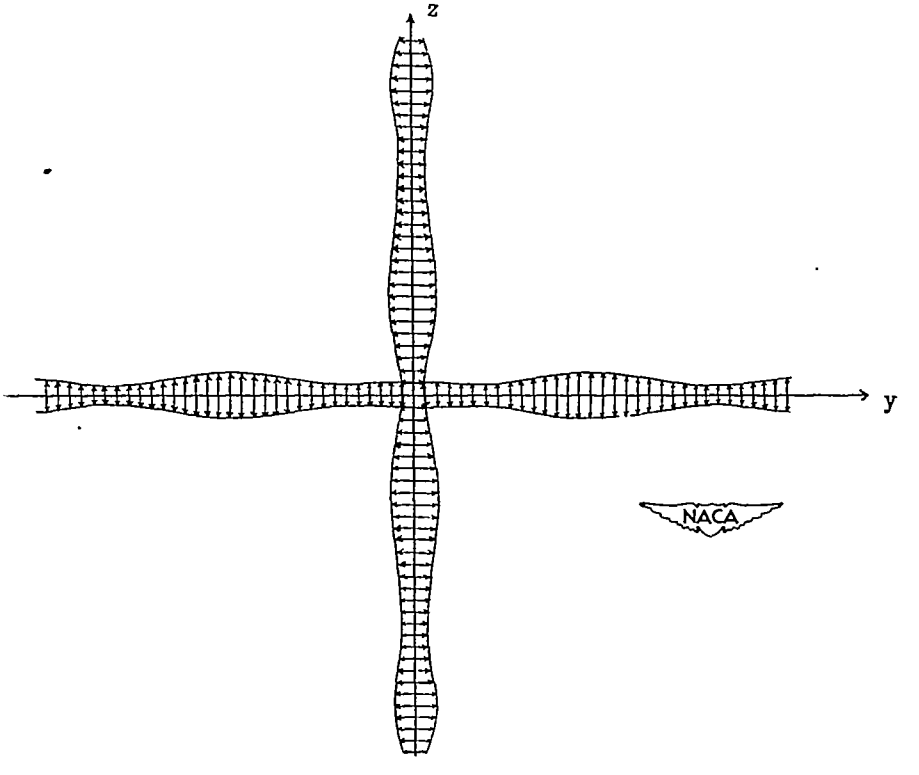

(b) Solution to problem as given by equation (61).

Figure 11.- A cross section of the distribution of the velocity component normal to the $z = 0$ and the $y = 0$ planes represented by equations (55) and (61).

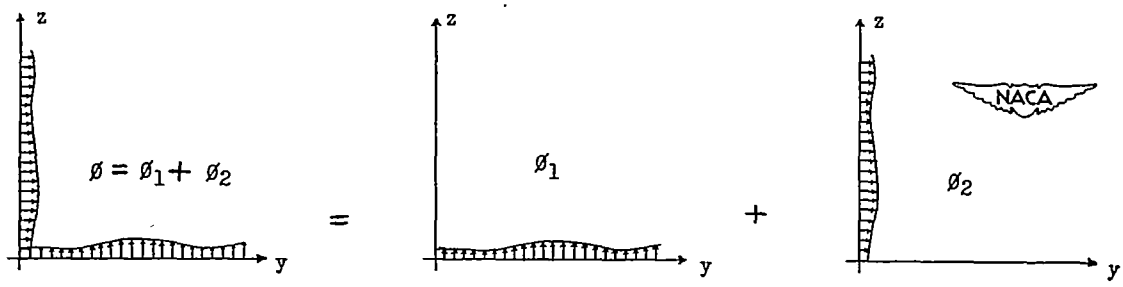

Figure 12.- A cross section of the distribution of velocity normal to the disturbing surfaces for the potential functions ϕ, ϕ_1, and ϕ_2.

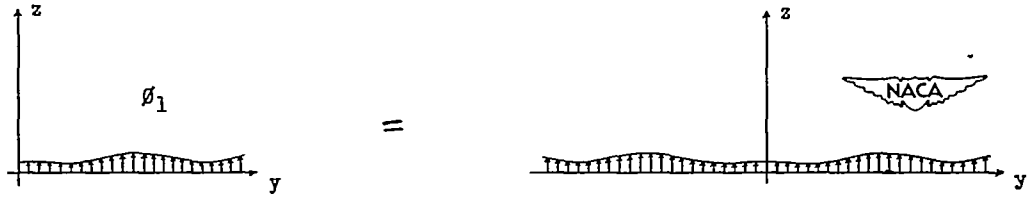

Figure 13.- The reduction of ϕ_1 to a planar problem.

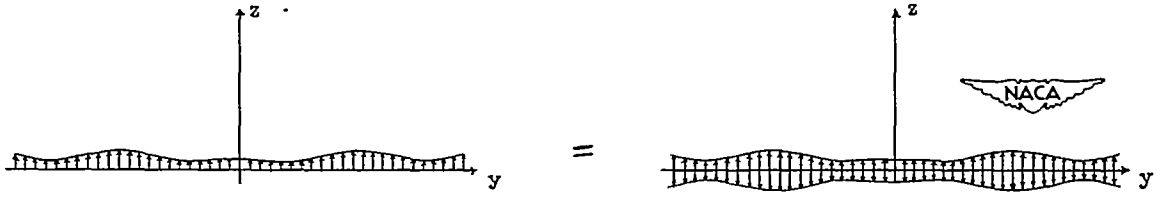

Figure 14.- The normal derivative of the potential function across the $z = 0$ plane obtained by applying equation (50) to a planar problem.

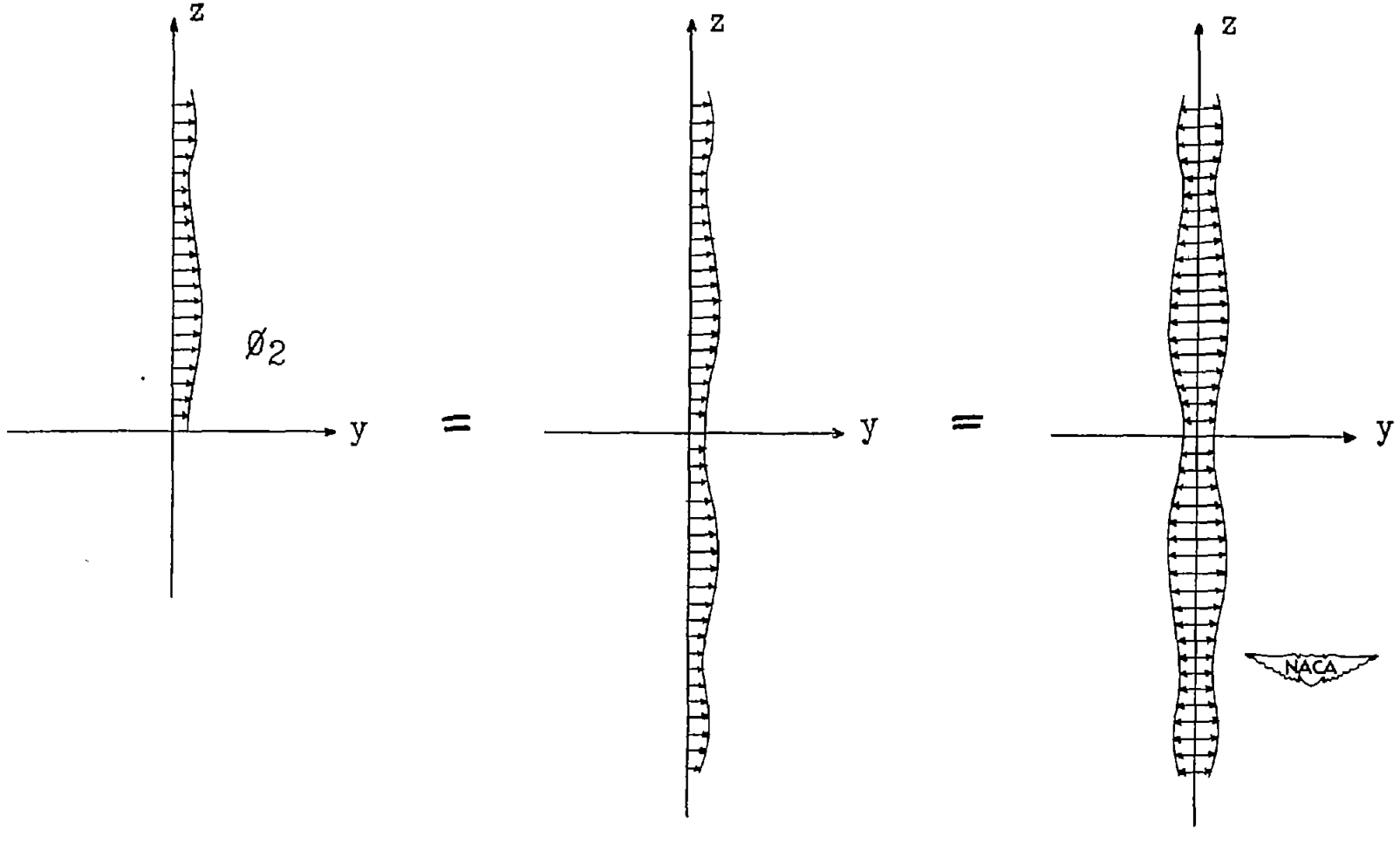

Figure 15.- An illustration of the reduction of ϕ_2 to a planar problem.

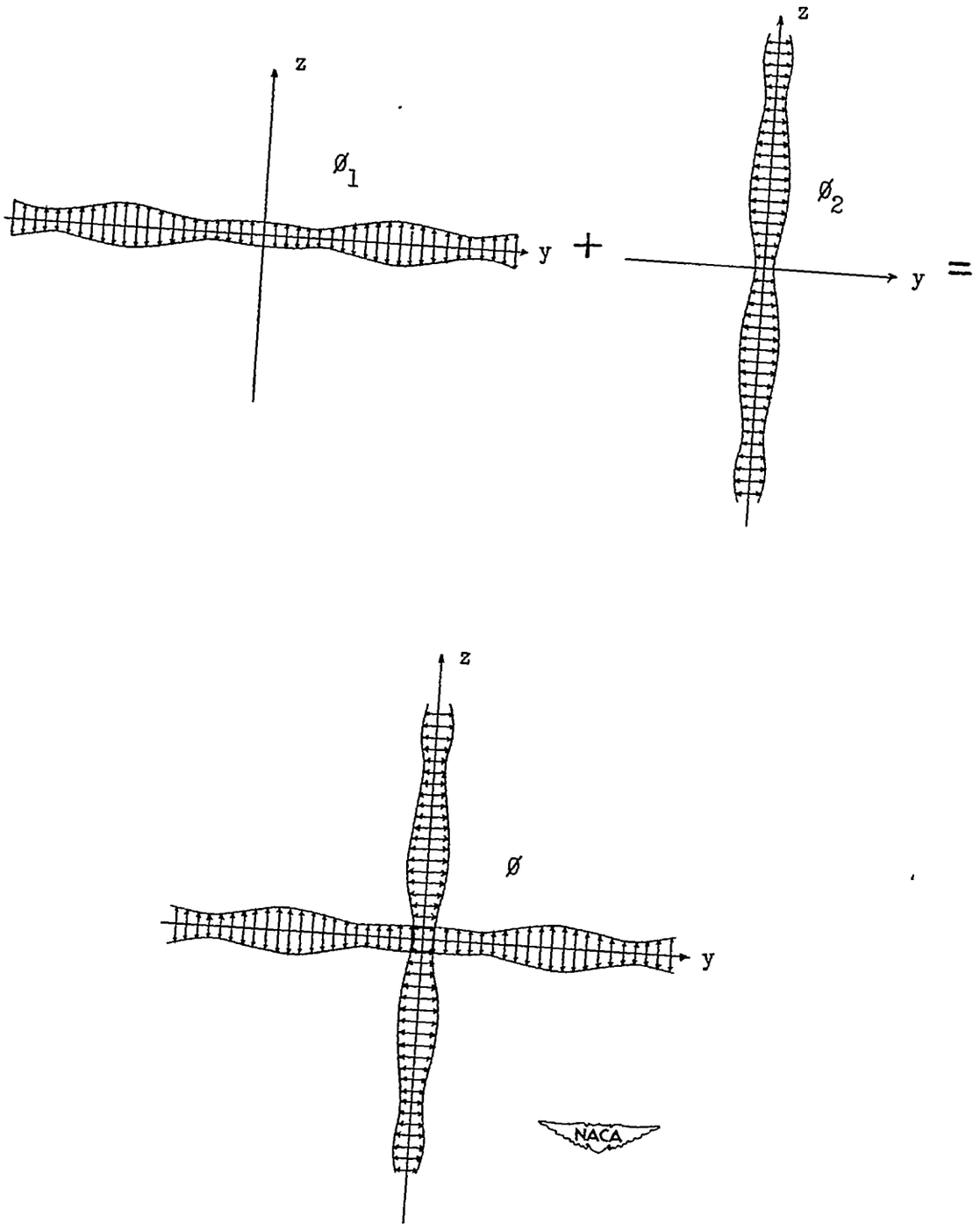

Figure 16.- An illustration of the addition of ϕ_1 and ϕ_2.

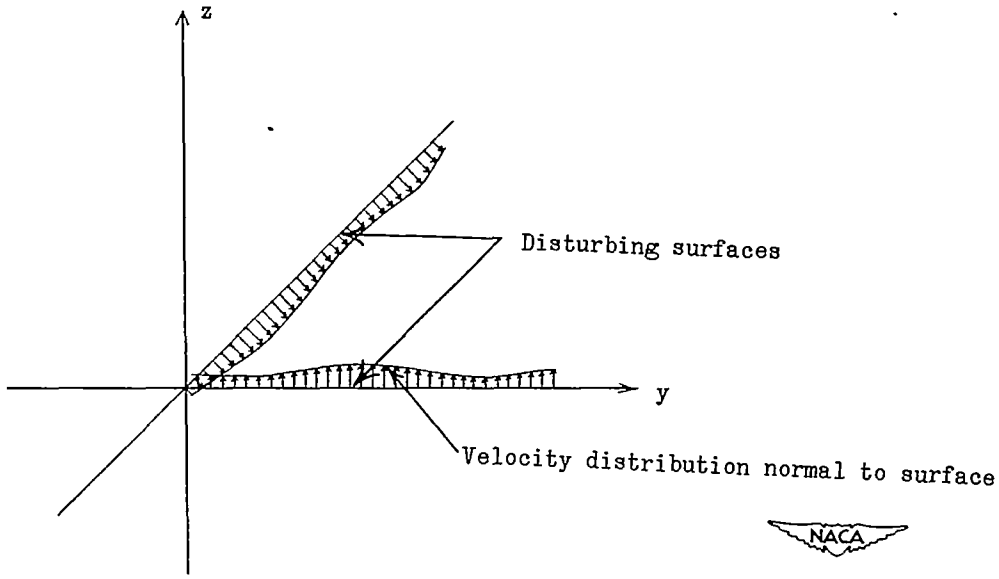

Figure 17.- Position of coordinate axes for disturbing surfaces intersecting at 45°.

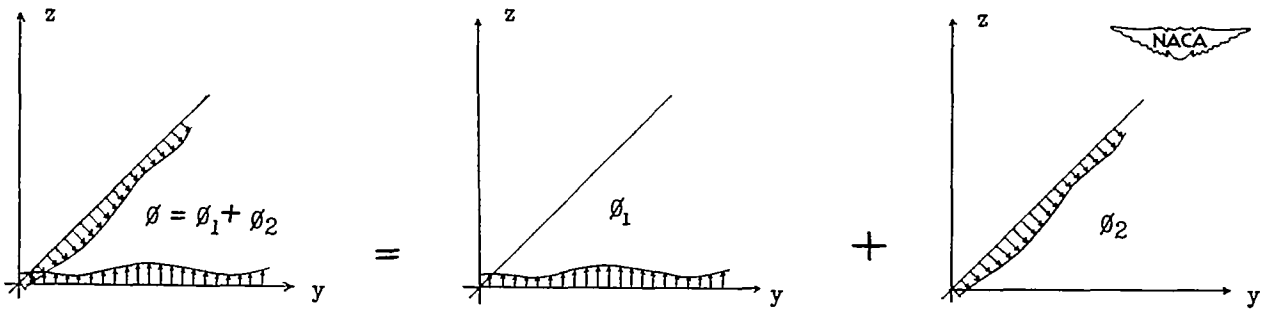

Figure 18.- A cross section of the velocity distribution on the disturbing surfaces for the functions ϕ_1 and ϕ_2 for the disturbing surfaces intersecting at 45°.

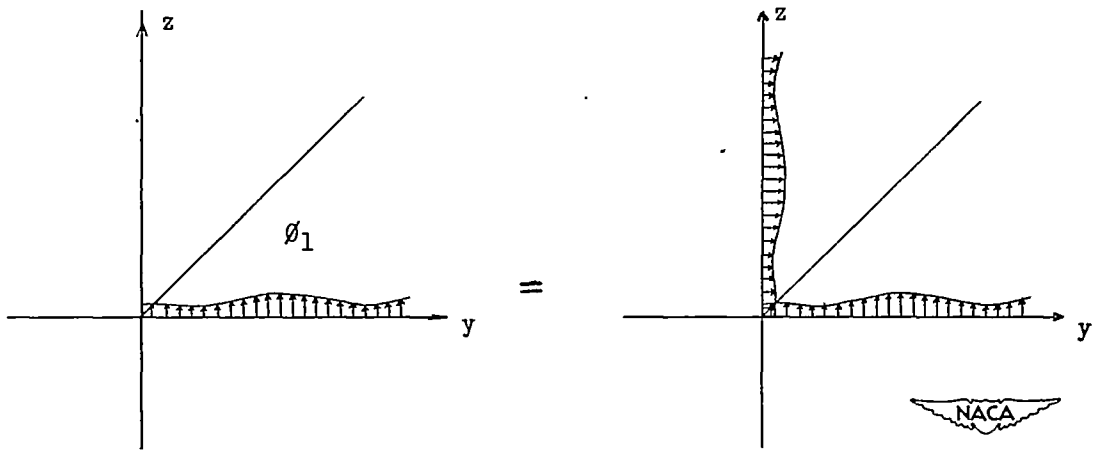

Figure 19.- Reflection of the normal derivative of ϕ_1 on the $y = 0$ plane.

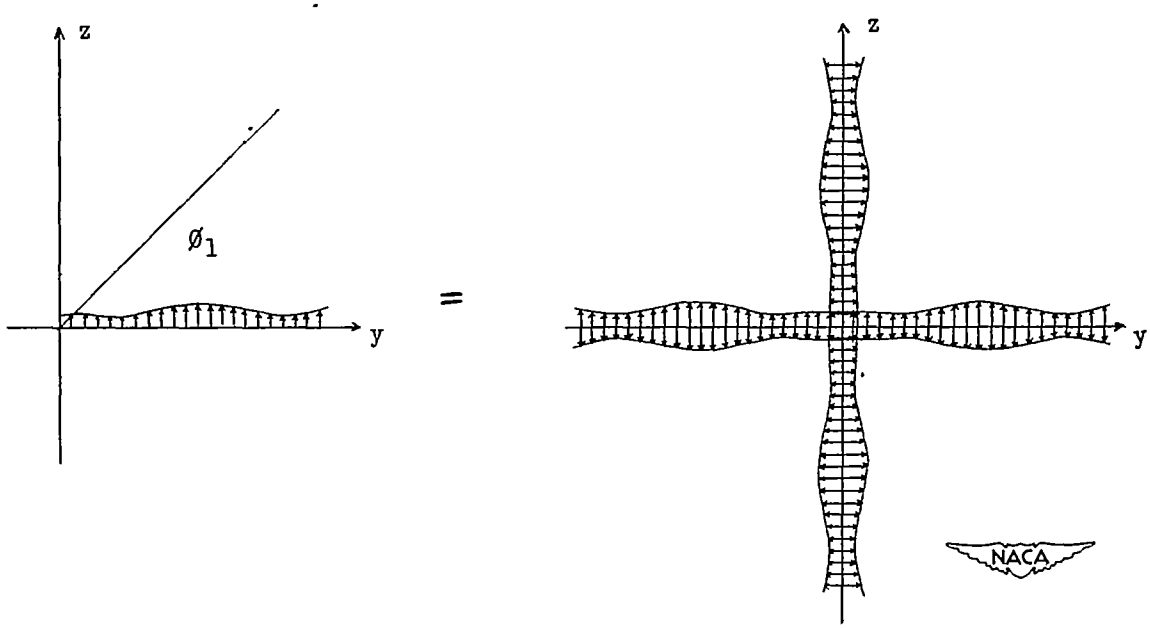

Figure 20.- A cross section of the surfaces of discontinuity which can be used to evaluate the potential function ϕ_1 for two surfaces intersecting at 45°.

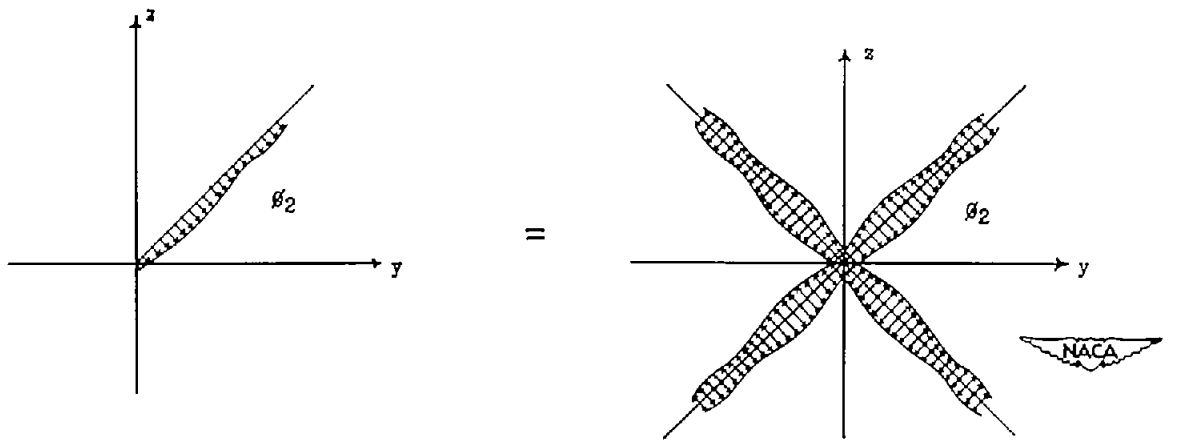

Figure 21.- A cross section of the surfaces of discontinuity which can be used to evaluate the potential function ϕ_2 for two planes intersecting at 45°.

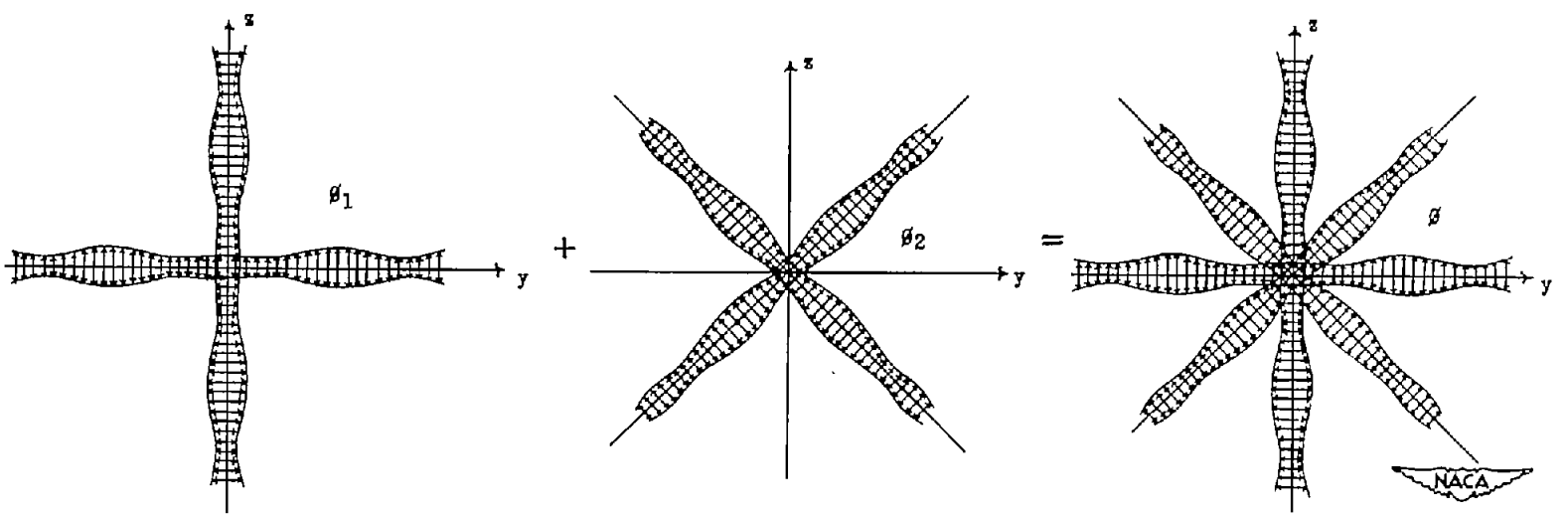

Figure 22.- The addition of ϕ_1 and ϕ_2 to obtain the potential function ϕ for two surfaces intersecting at 45°.

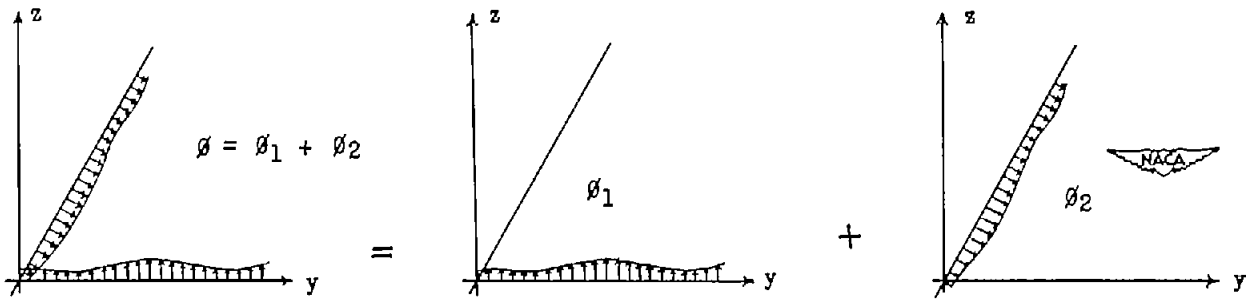

Figure 23.- A cross section of the boundary conditions of the functions ϕ_1 and ϕ_2 for two disturbing surfaces intersecting at 60°.

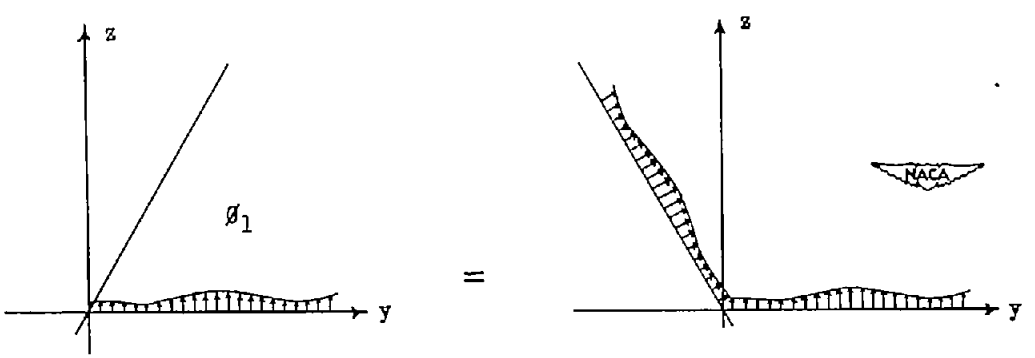

Figure 24.- The reflection of ϕ_1 through one surface.

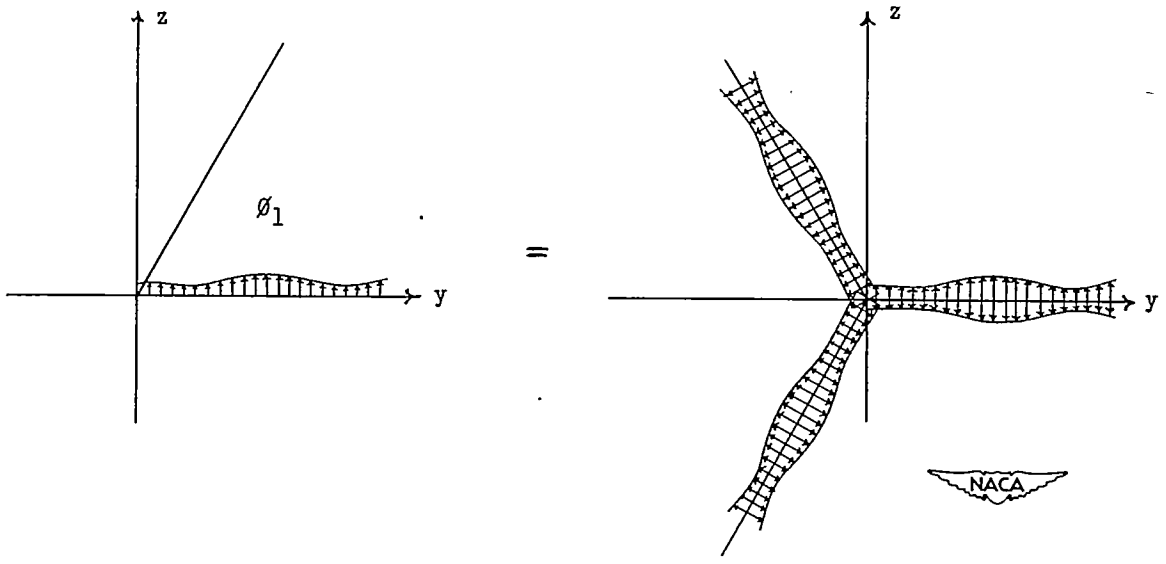

Figure 25.- A method of defining ϕ_1 so as to eliminate discontinuities in the potential function.

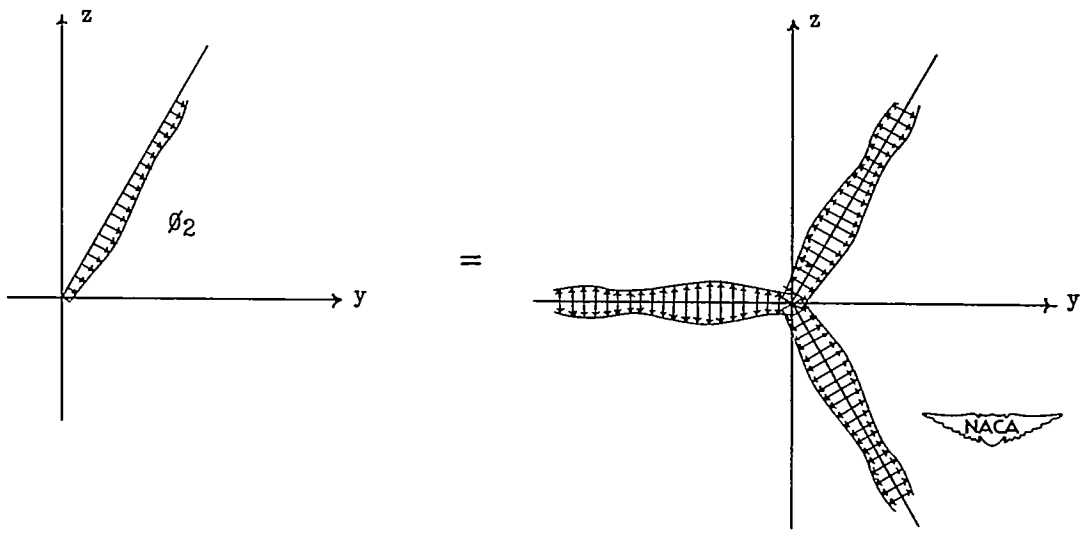

Figure 26.- A method of defining ϕ_2 so as to eliminate discontinuities in the potential function.

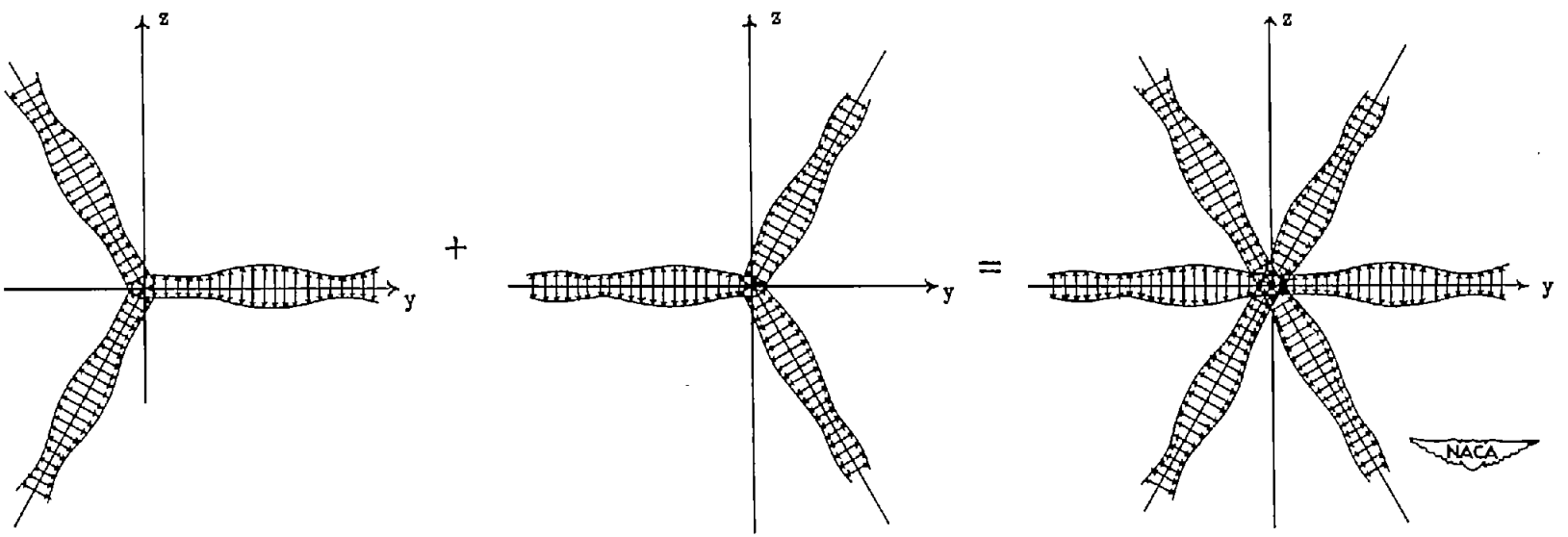

Figure 27.- The addition of ϕ_1 and ϕ_2.

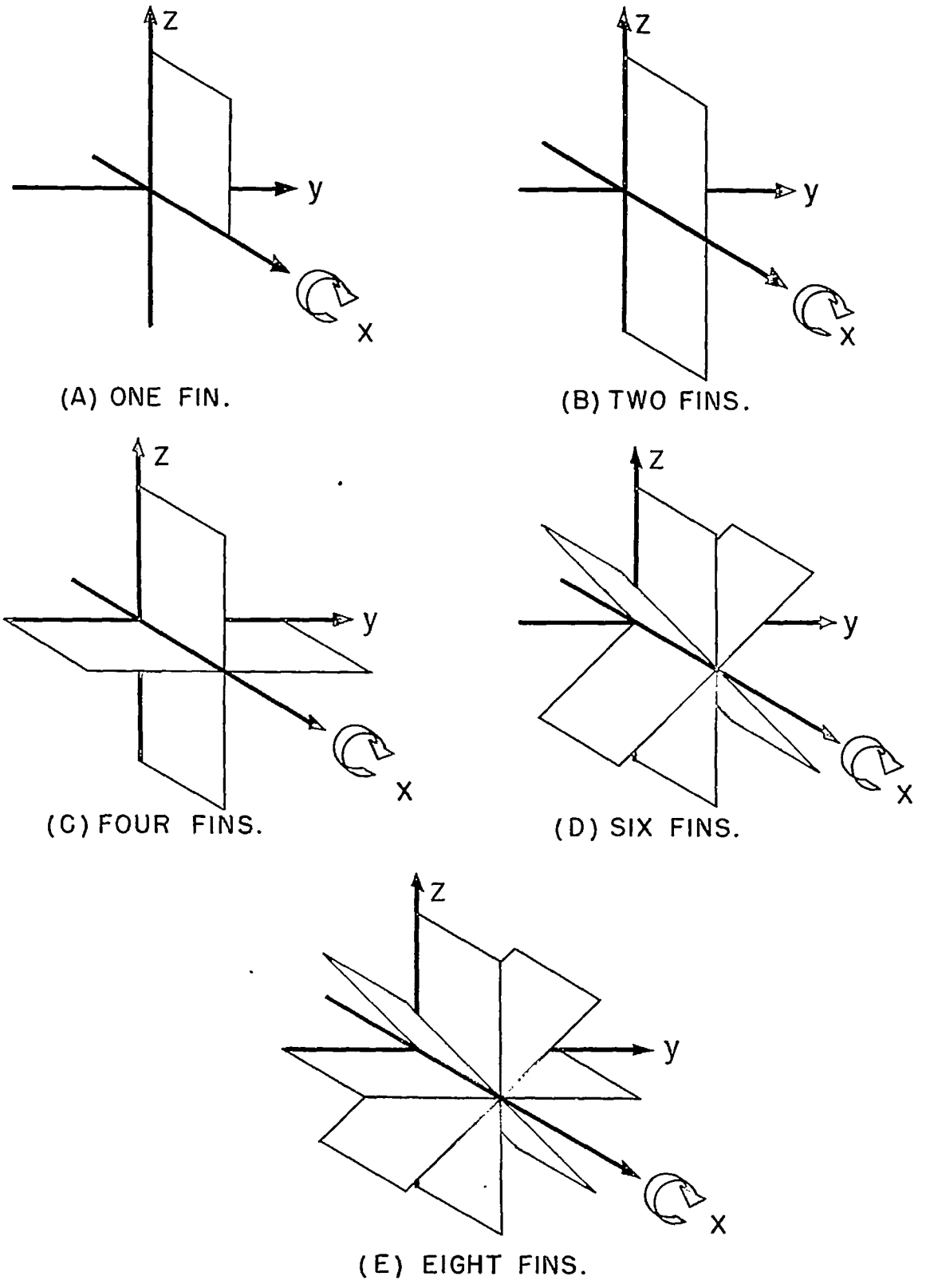

Figure 28.- Types of tails treated.

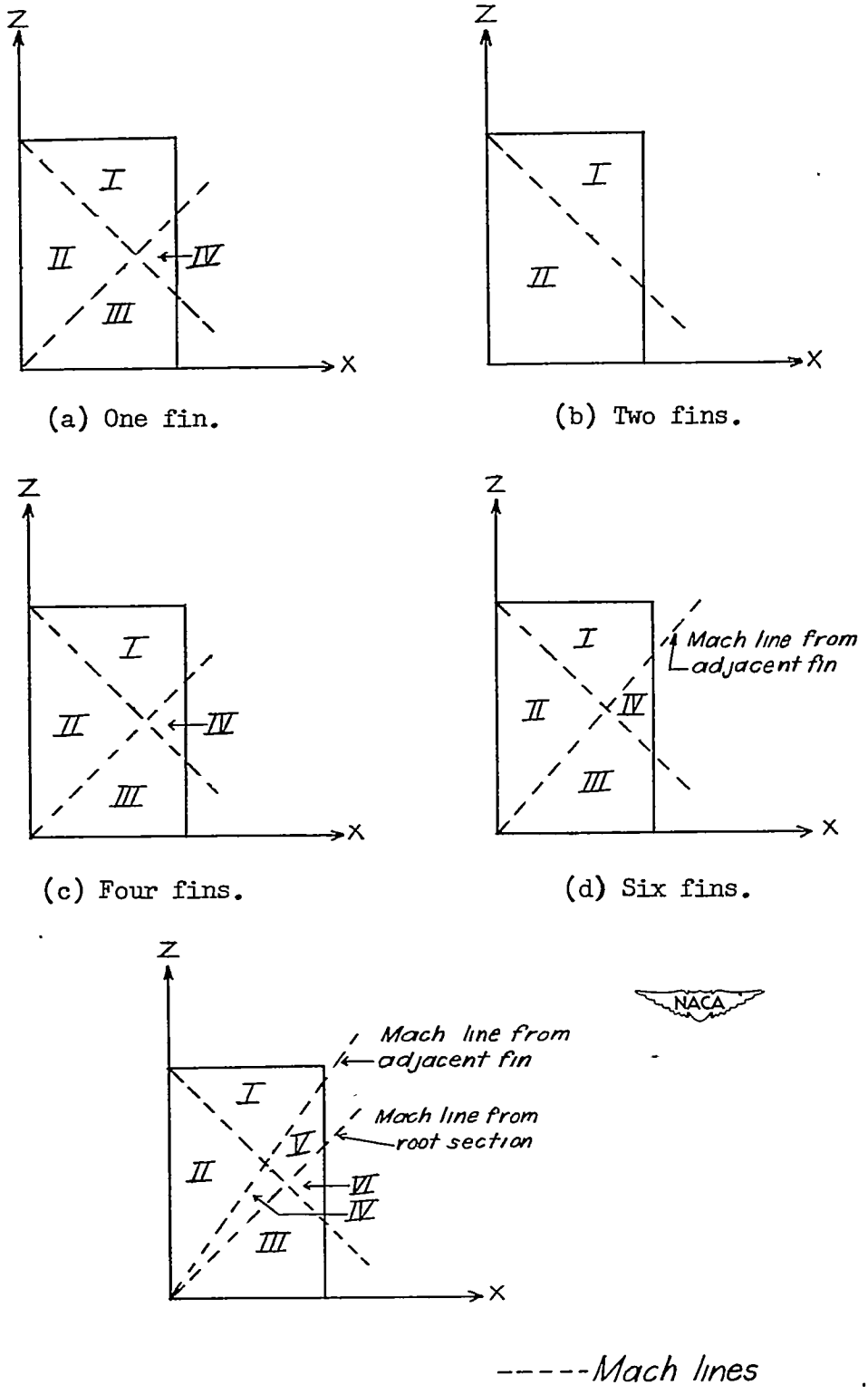

(a) One fin.

(b) Two fins.

(c) Four fins.

(d) Six fins.

(e) Eight fins.

Figure 29.- Regions of similar disturbances for tails consisting of rectangular fins.

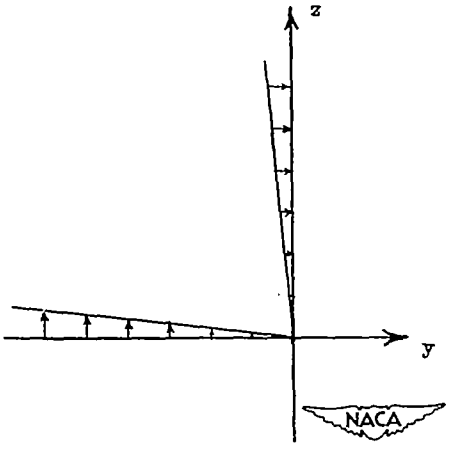

Figure 30.- A cross section of the normal-velocity distribution on two plane surfaces representing the region of interaction for a rolling tail with four fins.

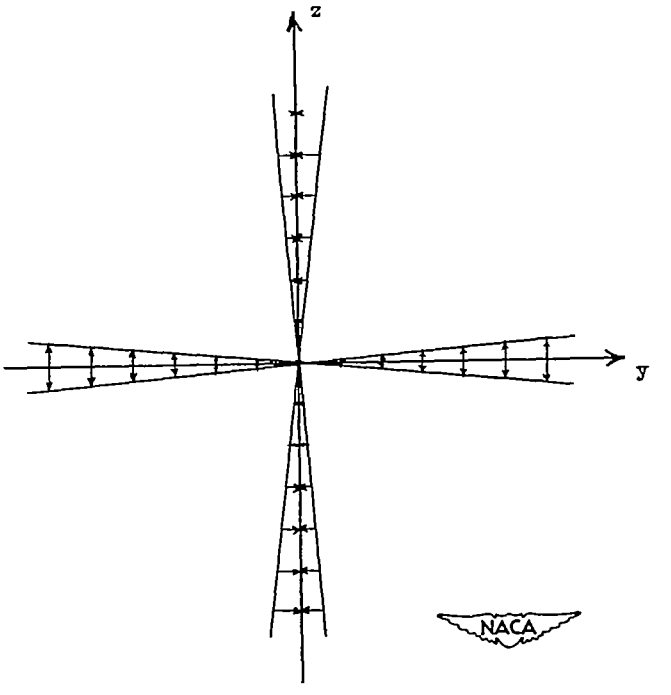

Figure 31.- A cross section of the velocity discontinuity distribution used to find the potential in part of the region of interaction for a tail of four fins.

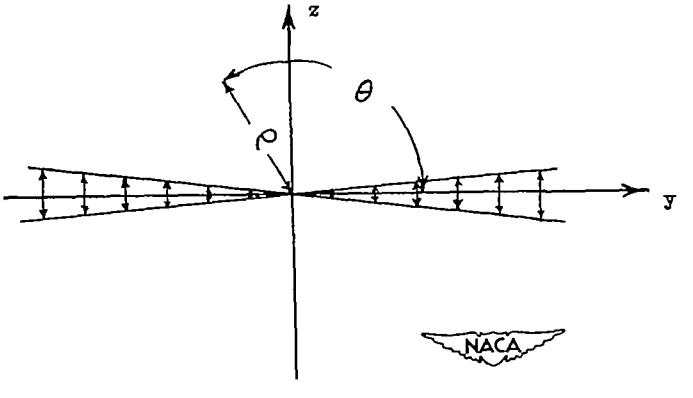

Figure 32.- A cross section of the velocity discontinuity distribution associated with the function ϕ_0 for a tail with four fins.

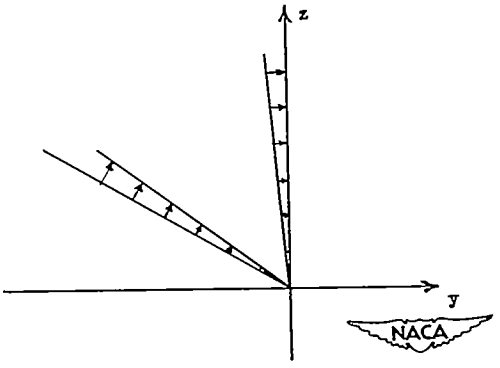

Figure 33.- A cross section of the velocity distribution normal to the planes of two fins of a rolling tail consisting of six fins.

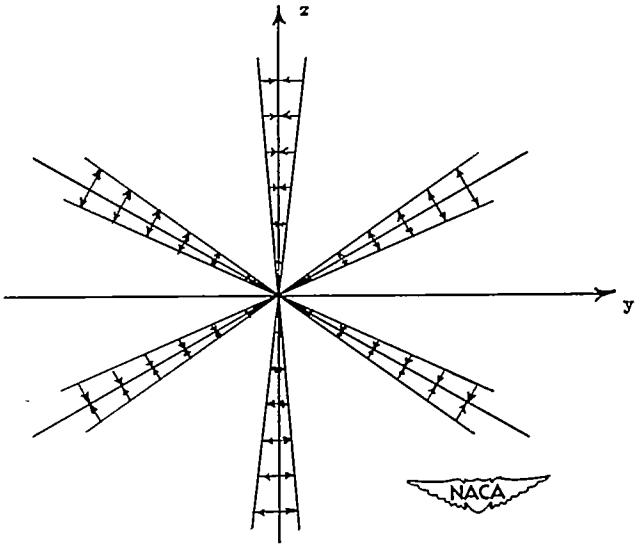

Figure 34.- A cross section of the velocity discontinuity distribution used to find the potential in part of the region of interaction for a tail of six fins.

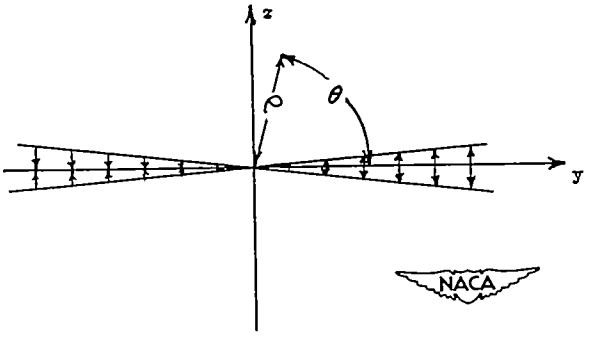

Figure 35.- A cross section of the velocity discontinuity distribution associated with the function ϕ_0 for a tail of six fins.

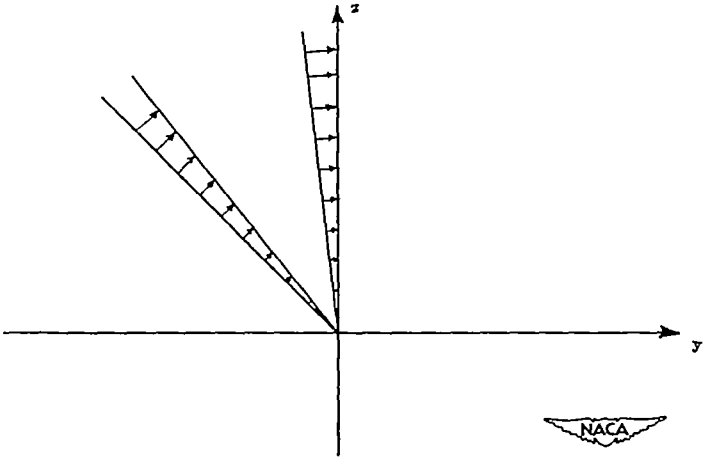

Figure 36.- A cross section of the normal velocity induced on the planes of two fins of a rolling tail consisting of eight fins.

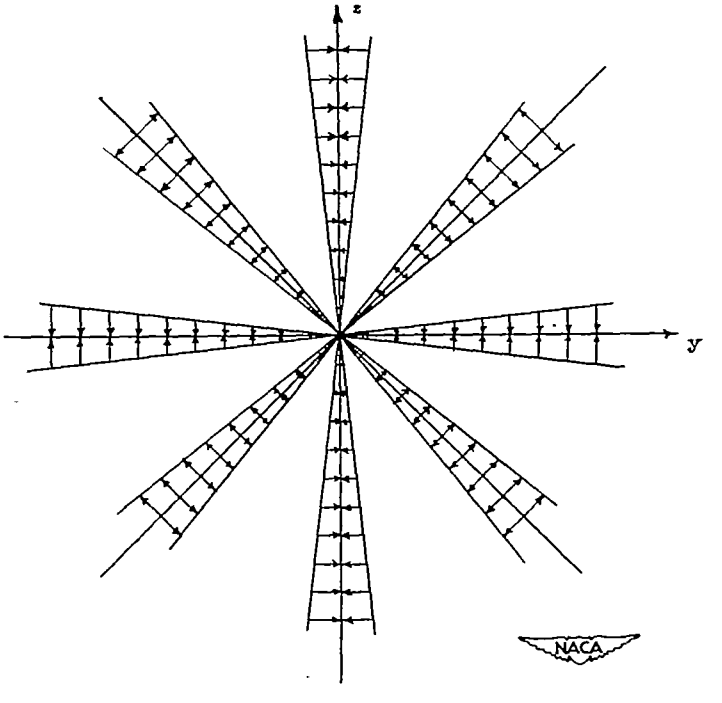

Figure 37.- A cross section of the velocity discontinuities which can be used to obtain the potential in the region of interaction between adjacent fins for a tail consisting of eight fins.

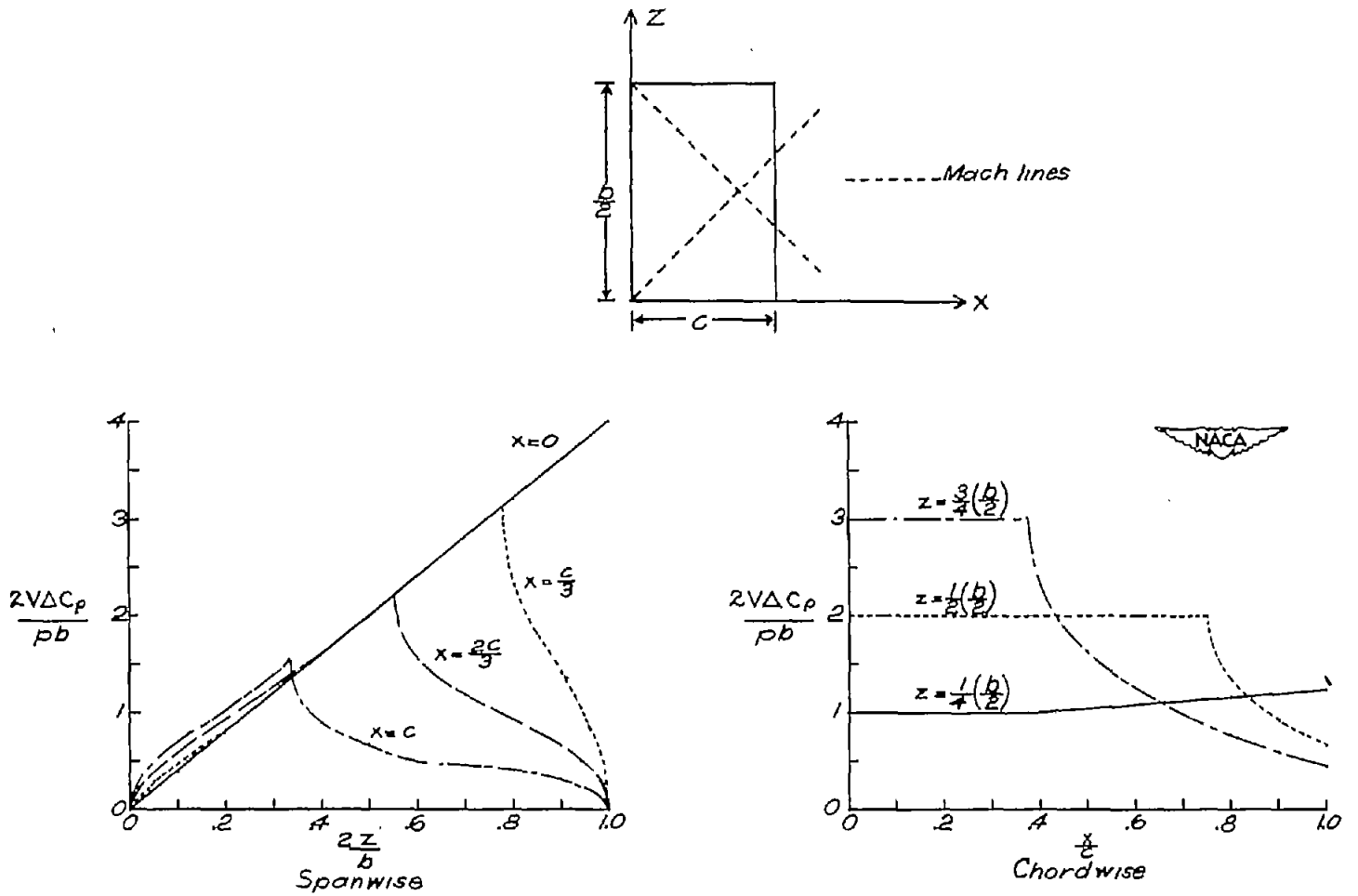

(a) Tail of one fin.

Figure 38.- Chordwise and spanwise pressure distributions on a fin of aspect ratio 1.5 at a Mach number of $\sqrt{2}$ for tails consisting of rectangular fins.

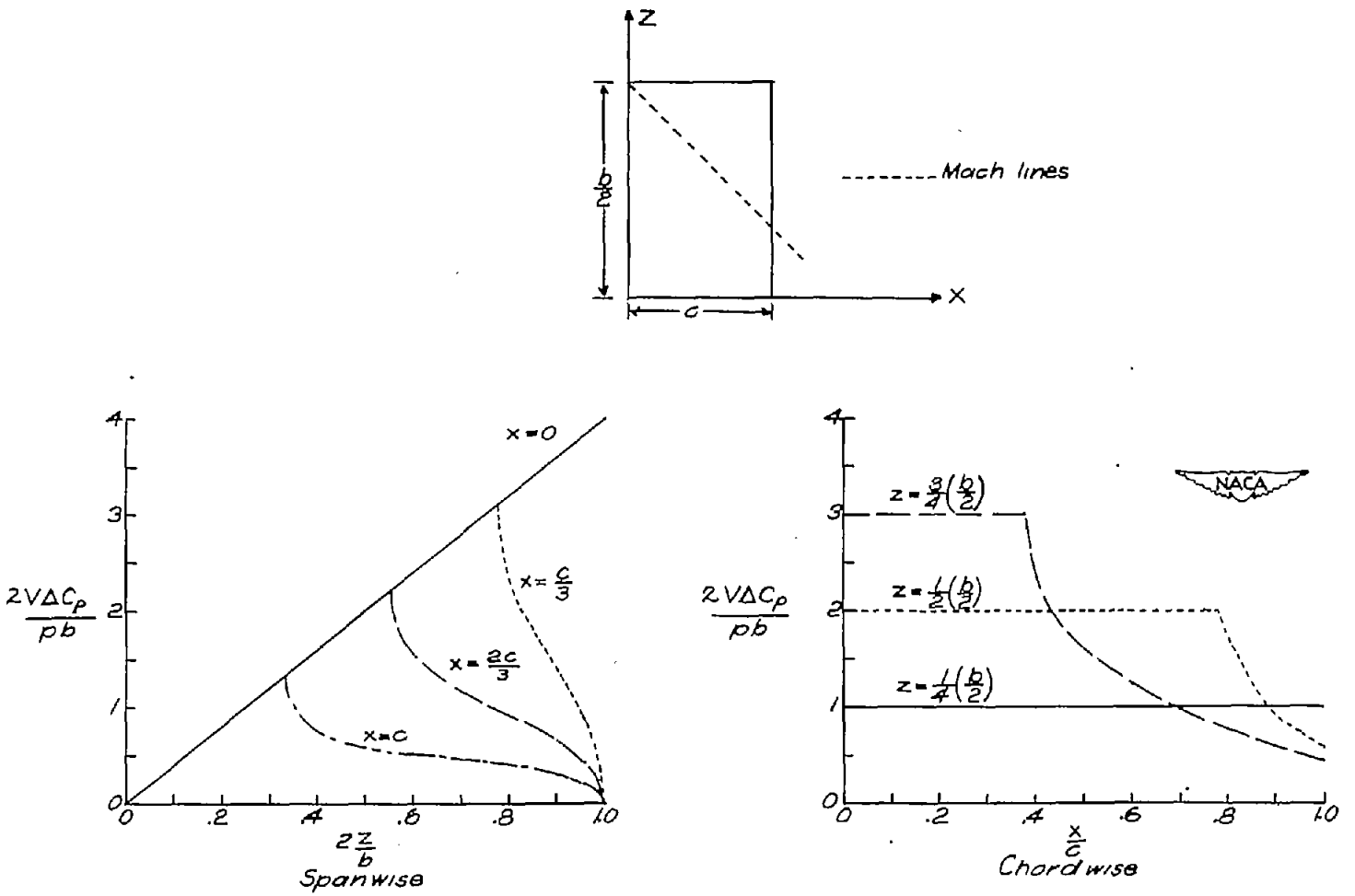

(b) Tail of two fins.

Figure 38.- Continued.

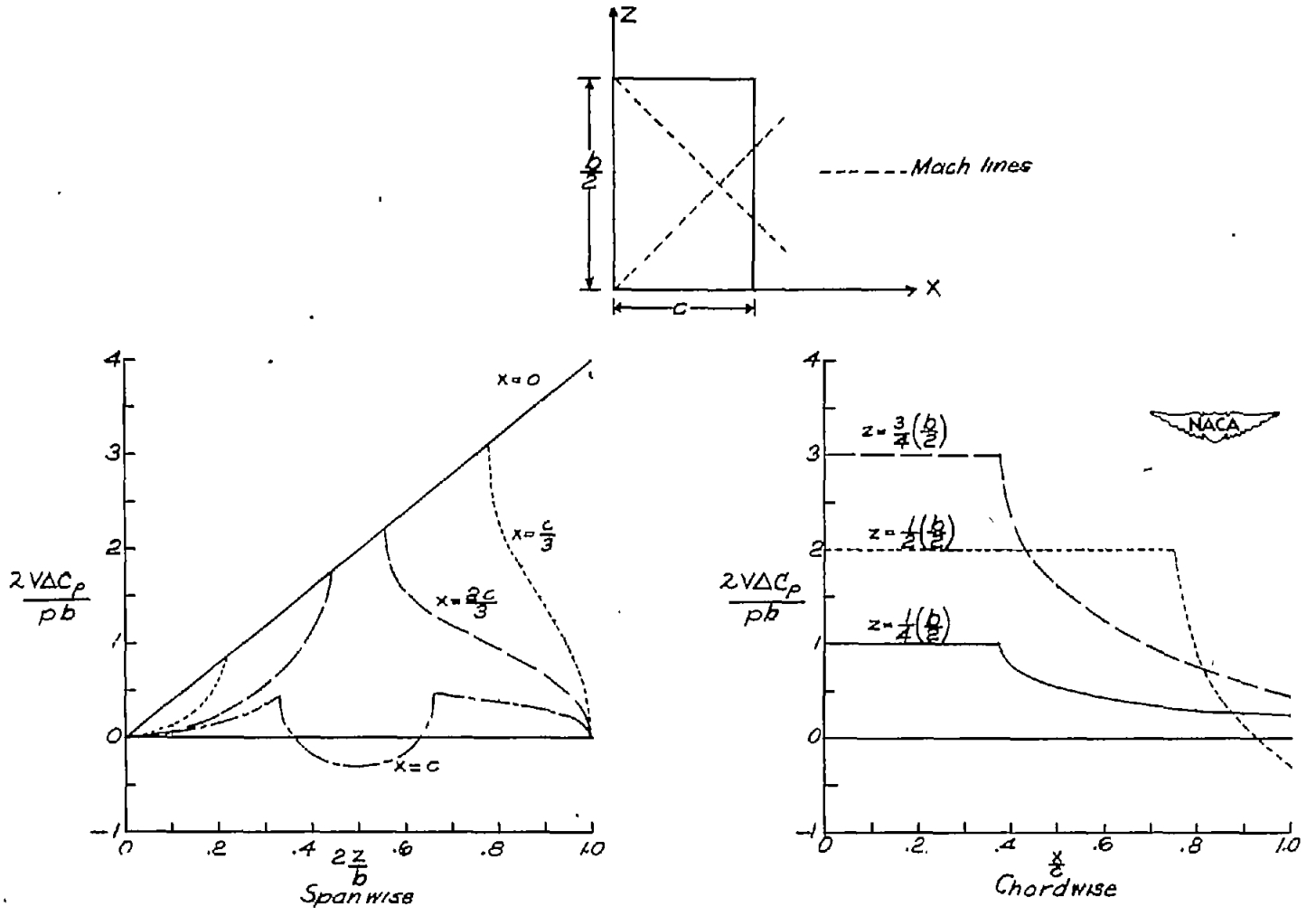

(c) Tail of four fins.

Figure 38.- Continued.

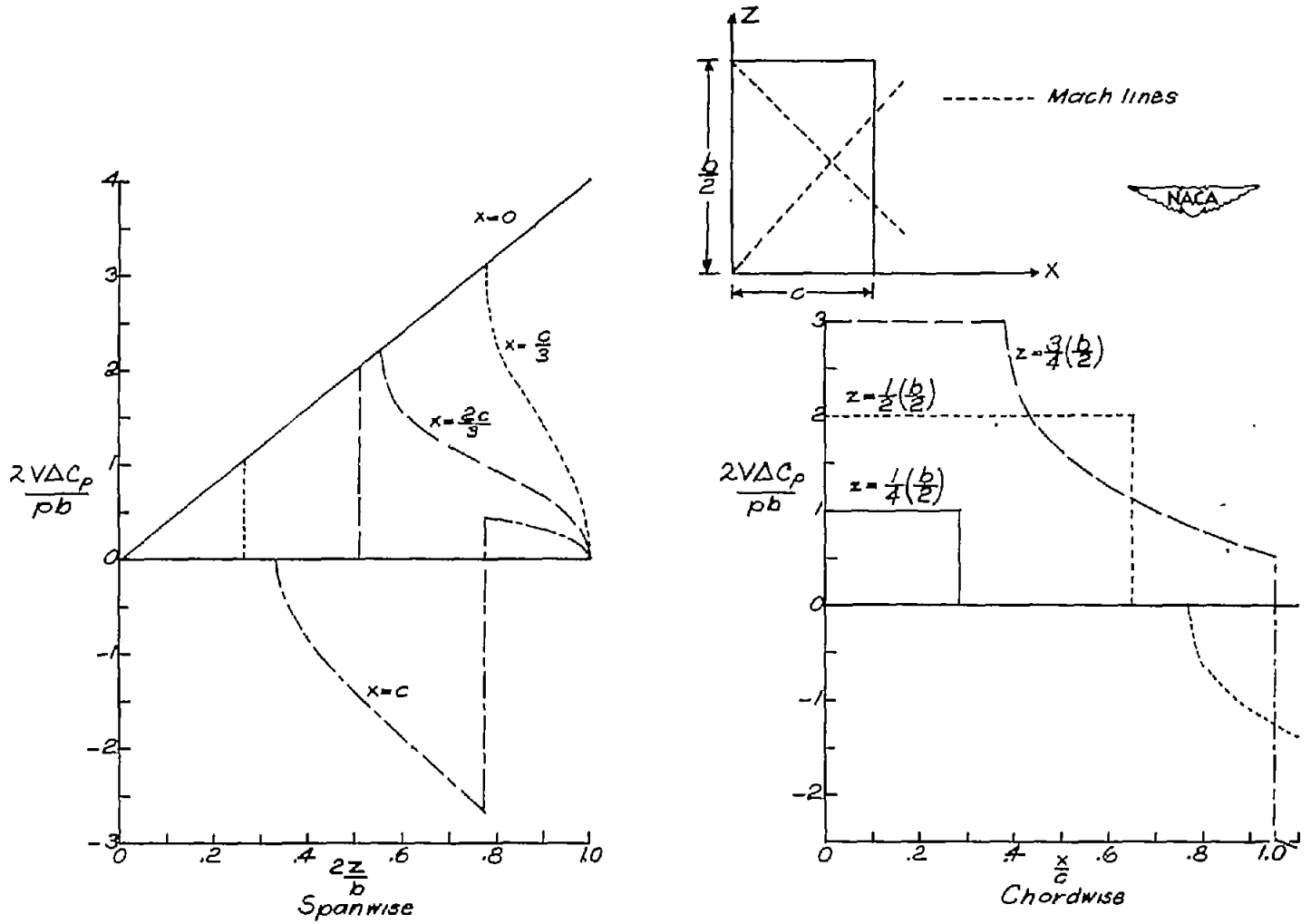

(d) Tail of six fins.

Figure 38.- Continued.

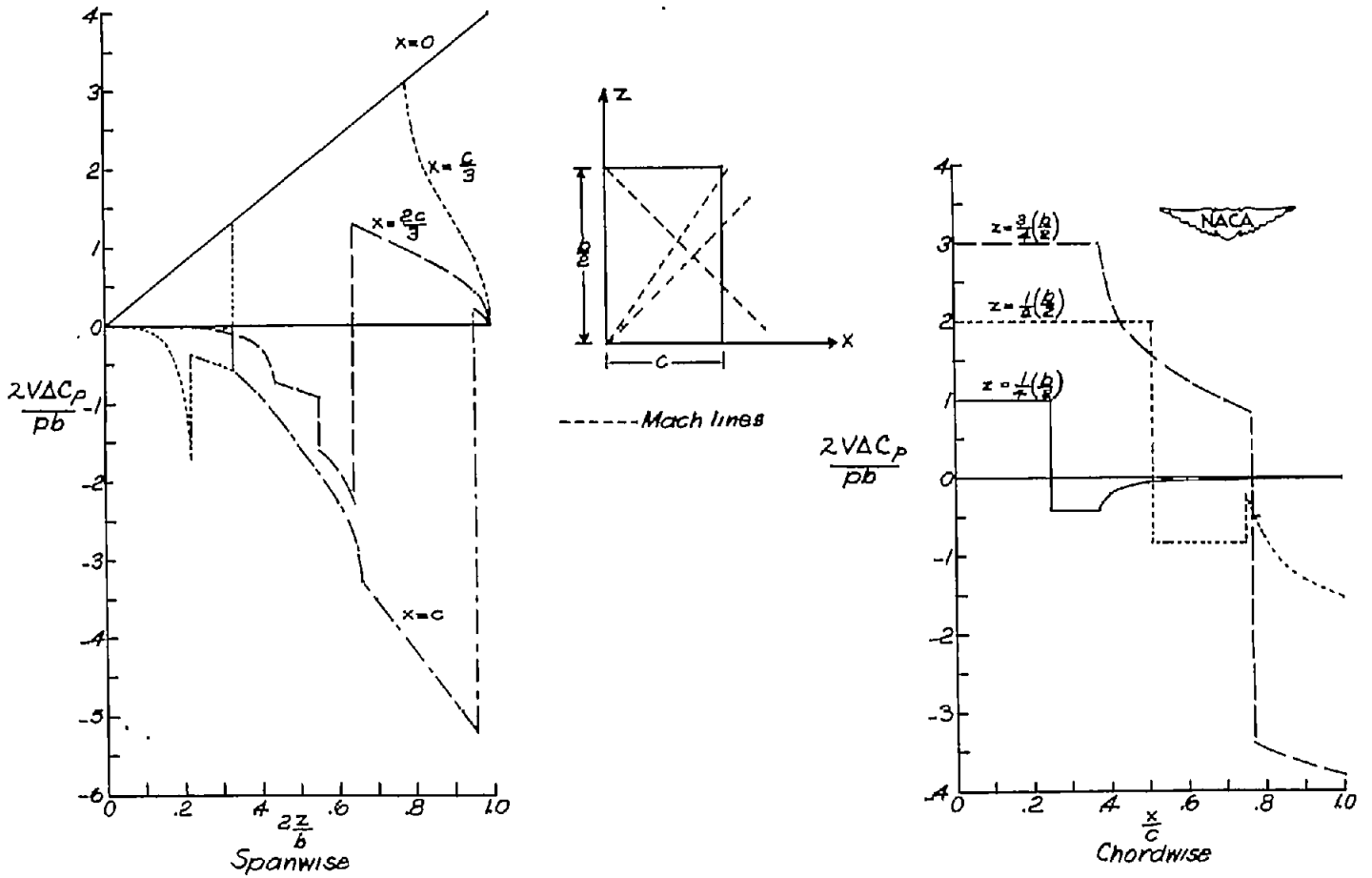

(e) Tail of eight fins.

Figure 38.- Concluded.

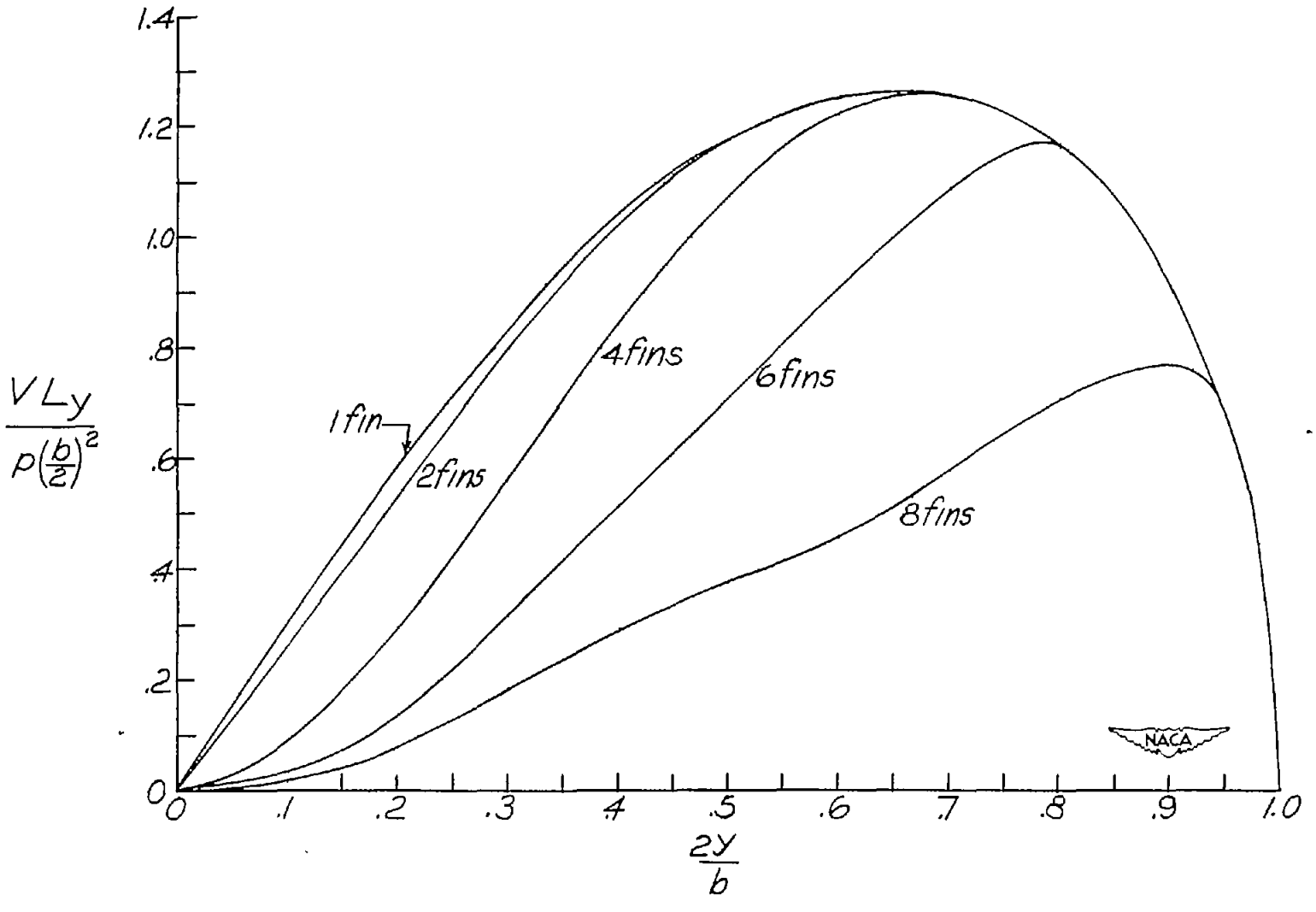

Figure 39.- Spanwise loading on a fin of aspect ratio 1.5 at a Mach number of $\sqrt{2}$ for tails consisting of rectangular fins.

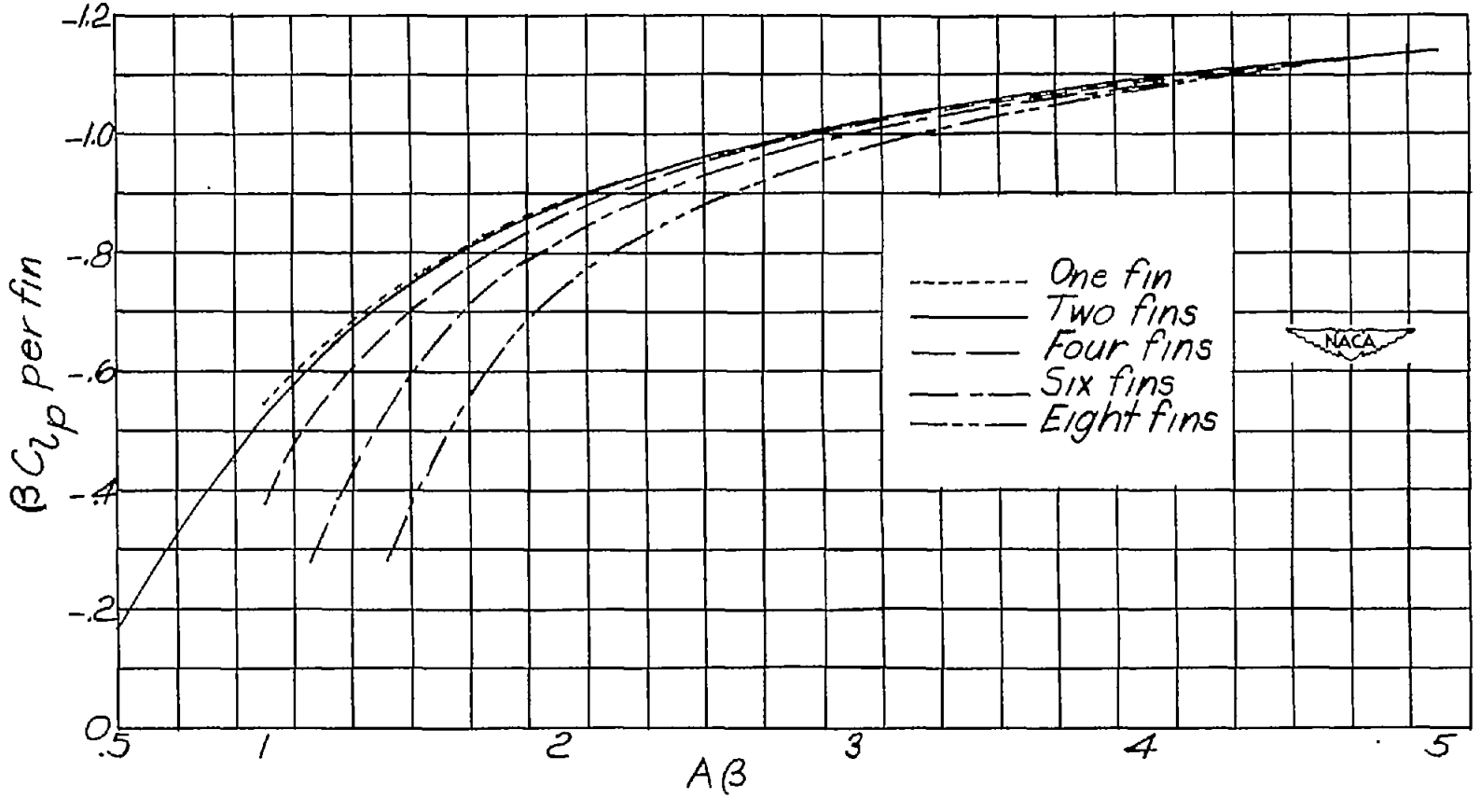

Figure 40.- The damping in roll per fin for tails consisting of rectangular fins.

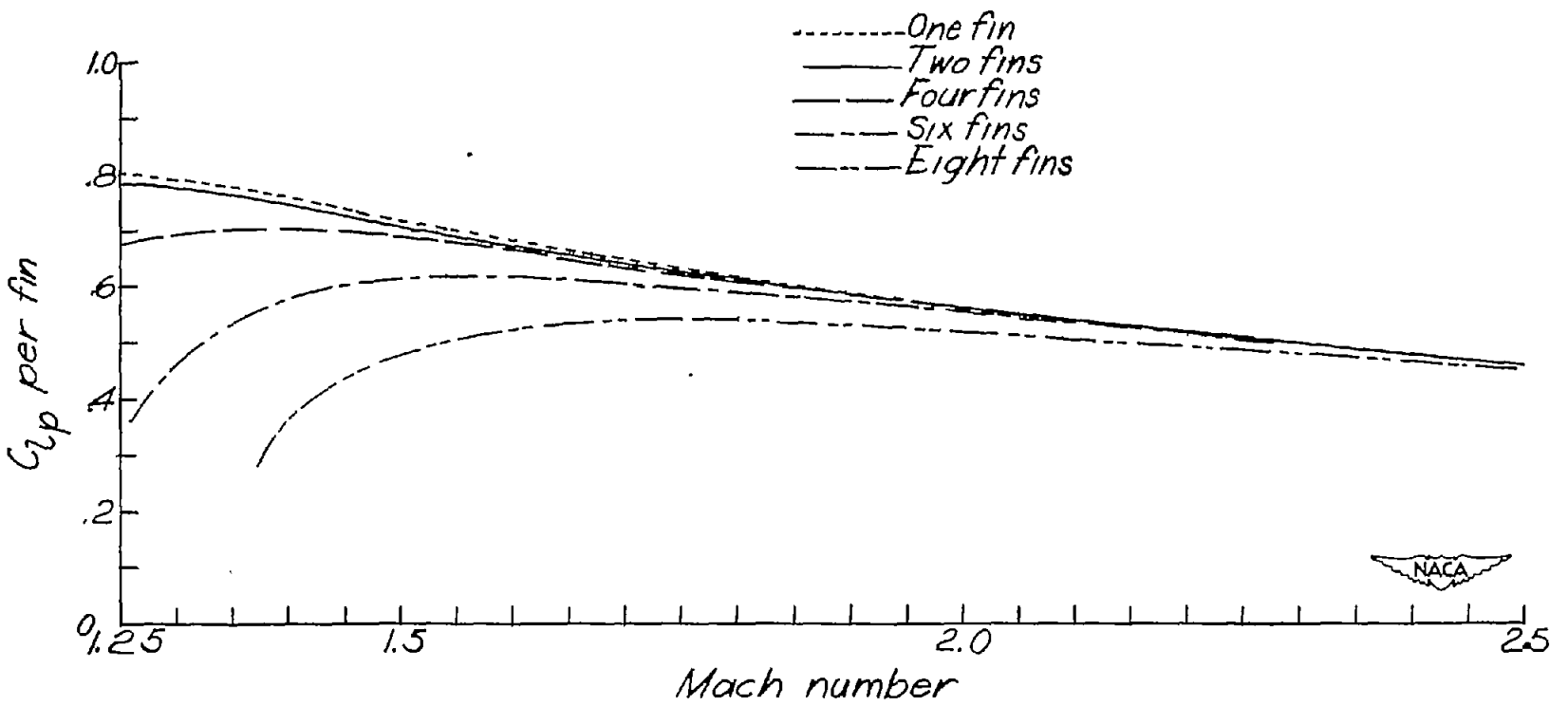

Figure 41.- An illustrative variation of C_{l_p} per fin with Mach number for tails consisting of rectangular fins with a fin aspect ratio of 1.5.

NACA-Langley - 8-24-48 - 1000