NACA TN 2669 9039

TECH LIBRARY KAFB, NM
0065462

NATIONAL ADVISORY COMMITTEE FOR AERONAUTICS

TECHNICAL NOTE 2669

APPROXIMATE THEORY FOR CALCULATION OF LIFT OF BODIES, AFTERBODIES, AND COMBINATIONS OF BODIES

By Barry Moskowitz

Lewis Flight Propulsion Laboratory
Cleveland, Ohio

Washington
April 1952

NATIONAL ADVISORY COMMITTEE FOR AERONAUTICS

TECHNICAL NOTE 2669

TECH LIBRARY KAFB, NM

0065462

APPROXIMATE THEORY FOR CALCULATION OF LIFT OF BODIES, AFTERBODIES, AND COMBINATIONS OF BODIES

By Barry Moskowitz

SUMMARY

An expression is developed for the lift of a slender afterbody in terms of the "slender-body" approximate potential at the after end in conjunction with a suitably calculated value of the potential at the forward end. The failure of the usual "slender-body" theory to predict any lift on a slender cylindrical afterbody is thereby corrected. The same expression is used to compute the part of the interference lift generated by the presence of a neighboring body, due to the interference upwash. Another expression is developed to compute the remainder of the interference lift, due to an interference pressure gradient. The lift is determined for a cone-cylinder body, a cylindrical afterbody of a slender wing-body combination, and three combinations of bodies to illustrate the method.

INTRODUCTION

In the search for better aerodynamic configurations for supersonic flight, the missile shape has become more complex. One of the problems arising is the effect of interference between bodies which occurs, for example, when the propulsive unit is mounted external to the fuselage. An adaptation of slender-body theory for obtaining a simple approximation of the interference lift between such bodies was developed at the NACA Lewis laboratory and is presented in this report. This approximate theory is also applied for the calculation of the lift of an afterbody, which is herein defined as the portion of the body behind the wing trailing edge for a wing-body combination or as the portion of the body aft of the nose section for a wingless body.

Slender-body theory as originally developed by Munk in studying the lift of airships (reference 1) has proved useful in predicting the lift of low-aspect-ratio wings, slender bodies, and slender wing-body combinations at supersonic speeds (references 2, 3, and 4). However, slender-body theory yields the unrealistic result that a cylindrical afterbody of a wing-body combination and a cylindrical afterbody of a body carry no lift.

Although slender-body theory may be grossly in error on the lift of a slender afterbody, the theory closely approximates the correct

value of the part of the surface potential at the rear of the afterbody proportional to the angle of attack. An expression utilizing this fact is developed herein for the afterbody lift in terms of the slender-body potential at the after end in conjunction with a suitably calculated value of the potential at the forward end. The more accurate methods of calculation of greater labor (for example, linearized theory) are thereby limited to the forward or nonslender portion of the body.

The same expression is used to compute the part of the interference lift of bodies of revolution due to the upwash field generated by each body on the other. Another interference effect considered herein is that due to the variable pressure field generated by one body in the vicinity of the other, which results in a buoyant force.

As examples of the method, the lift of a cone-cylinder body, the lift of a cylindrical afterbody of a slender wing-body combination, and the lift of three combinations of bodies are determined.

ANALYSIS

Basic Equations

Consider a slender body of revolution at zero angle of attack in a uniform supersonic stream of velocity U. There will be a certain disturbance velocity field and an associated velocity potential produced by the body. Because of symmetry, this velocity field will give rise to no lift.

Now let the body be given a small angle of attack α and be subject, in addition, to a small disturbance field $(\bar{u},\bar{v},\bar{w})$ generated by a second body (fig. 1). (The symbols used herein are defined in appendix A.) The first body will develop an additional velocity potential due to α and to the disturbance field. If $\bar{v}$ and $\bar{w}$ are suitably restricted it is shown in appendix B that to a certain accuracy (a) only that part of this additional potential due to α and to $\bar{w}$ will give rise to lift, and (b) cross product terms involving both potentials may be neglected for the lift. Call this lift-producing incremental potential φ.

Equations of motion and boundary condition. - The incremental potential φ is presumed to satisfy the governing equation for small-disturbance, isentropic irrotational flow

$$\beta^2\varphi_{xx} - \varphi_{yy} - \varphi_{zz} = 0 \tag{1}$$

In addition, φ is specified to satisfy the boundary condition that the cross flow, $U\alpha + \bar{w}$, must be canceled at the surface of the body; that is,

$$(\varphi_r)_{r=R} = -(U\alpha + \bar{w})\sin\theta \tag{2}$$

on the body. This boundary condition is linearized, not exact.

Pressure coefficient. - That part δp of the entire pressure increment Δp which contributes to the lift is, to the present accuracy, given by the linearized Bernoulli equation

$$\frac{\delta p}{q} = \frac{-2(\varphi_x + \bar{u})}{U} \tag{3}$$

Specifically, the accuracy is such that all terms of order $\alpha\, dR/dx$ or $(dR/dx)^2$, but no higher, which can contribute to the lift will be included; this result is proved in appendix B.

Lift. - The axis of the slender body under consideration will always be taken parallel to the x-axis. For simplicity the sidewash $\bar{v}$ and $\bar{w}$ generated by the interfering body are considered to vary only with the coordinate x in the general vicinity of the primary body; this restriction is the one mentioned earlier. (The sidewash will not be considered further because it contributes nothing to the lift (see appendix B)). The approximation should be valid if the bodies are not too close to each other.

The lift of the body may be obtained by integrating the component of the pressure in the lift direction around and along the body. The expression for the lift is

$$\text{Lift} = -q\int_{x_1}^{x_2}\int_0^{2\pi}\frac{\delta p}{q}\sin\theta\, R\, d\theta\, dx = -q\int_0^{2\pi}\sin\theta\, d\theta\int_{x_1}^{x_2} R\,\frac{\delta p}{q}\, dx \tag{4}$$

where R is the radius of the body and x_1 and x_2 are the x-coordinates at the start and base of the body, respectively.

Substituting equation (3) into equation (4) gives

$$\text{Lift} = \underbrace{\frac{2q}{U}\int_0^{2\pi}\sin\theta\, d\theta\int_{x_1}^{x_2} Ru\, dx}_{L} + \underbrace{\frac{2q}{U}\int_{x_1}^{x_2} R\, dx\int_0^{2\pi}\bar{u}\sin\theta\, d\theta}_{B} \tag{5}$$

The second integral in equation (5) represents the lift of a body immersed in a variable pressure field and may be considered as a buoyant force. The integral will be discussed in detail in the section on interference between bodies in combination.

Development based on first integral in lift equation. - This section is concerned with the transformation of the first integral in equation (5) into a more useful form involving the surface potential. Hereinafter this first integral will be called L.

For constant θ, the quantity $Ru\ dx$ may be written

$$Ru\ dx = R\ d\varphi - R(\varphi_r dr)_{r=R} = d(R\varphi) - \varphi \frac{dR}{dx} dx - R(\varphi_r)_{r=R} \frac{dR}{dx} dx \tag{6}$$

Insertion of equation (6) into the first integral of equation (5) yields

$$L = \frac{2q}{U} \int_0^{2\pi} \sin\theta \left\{ R_2\varphi_2 - R_1\varphi_1 - \int_{x_1}^{x_2} \left[\varphi + R(\varphi_r)_{r=R}\right] \frac{dR}{dx} dx \right\} d\theta \tag{7}$$

The equation for the upwash perturbation velocity is

$$w = \varphi_r \sin\theta + \frac{1}{r} \varphi_\theta \cos\theta \tag{8}$$

Substitution of the value of $\varphi_r \sin\theta$ from this equation into equation (7) results, upon simplification, in the following equation for L:

$$L = \frac{2q}{U} \int_0^{2\pi} (R_2\varphi_2 - R_1\varphi_1) \sin\theta\ d\theta - \frac{2q}{U} \int_{x_1}^{x_2} R \frac{dR}{dx} dx \int_0^{2\pi} w\ d\theta +$$

$$\frac{2q}{U} \int_{x_1}^{x_2} \frac{dR}{dx} dx \int_0^{2\pi} \frac{\partial(\varphi \cos\theta)}{\partial\theta} d\theta$$

which reduces to

$$L = \frac{2q}{U} \int_0^{2\pi} (R_2\varphi_2 - R_1\varphi_1) \sin\theta\ d\theta - \frac{2q}{U} \int_{x_1}^{x_2} R \frac{dR}{dx} dx \int_0^{2\pi} w\ d\theta \tag{9}$$

because the integral in the last term is zero. The first integral in equation (9) may be integrated directly because, as shown in appendix B, the potential is of the form

$$\varphi = \sin\theta\ G(x,r)$$

Equation (9) then becomes

$$L = \frac{2q\pi}{U} \frac{R_2\varphi_2 - R_1\varphi_1}{\sin\theta} - \frac{2q}{U} \int_{x_1}^{x_2} R \frac{dR}{dx} dx \int_0^{2\pi} w \, d\theta \tag{10}$$

This equation is fundamental for subsequent developments.

If φ_1 and φ_2, the values of surface potential at the forward and after ends, respectively, of the section of the body under consideration, are known as well as the vertical component w of the body perturbation velocity, the lift may be obtained from equation (10). In the following sections, procedures are developed for determining the lift for cases in which the integration of the second term in equation (10) is negligible or zero. (When the second term is not zero, it is probably simpler to obtain the lift from equation (5) because the same type of computation is required to determine the w-distribution as is needed to determine the u-distribution.) For these cases, φ_2 is assumed to be the potential given by slender-body theory.

Slender-body theory for variable cross flow. - The central approximation of slender-body theory is the following: In any plane x = constant, the value of the potential increment φ associated with the cross flow is the two-dimensional potential of a cylinder having the local radius and moving with the local cross-stream velocity. For supersonic flow with uniform cross flow (that is, a fixed angle of attack and no variable interference upwash), this result is derived in reference 3 by taking the limit of the linearized value for radius approaching zero. The corresponding result will now be derived in similar fashion for the more general case of variable cross flow.

The potential in integral form may be written

$$\varphi = \frac{\sin\theta}{r} \int_0^{x-\beta r} \frac{g(\xi)(x - \xi)d\xi}{\sqrt{(x - \xi)^2 - \beta^2 r^2}} \tag{11}$$

The expression may be interpreted as the potential of a distribution of doublets of strength $\int g(x)dx$ per unit length $\left(g(x) = g_1'(x)\right.$ of appendix B).

When the distribution function for the limiting case $R \to 0$ is related to the local cross flow as in reference 3, there results

$$g(x) = \frac{d}{dx}\left\{R^2(x)\left[U\alpha + \overline{w}(x)\right]\right\} \tag{12}$$

Inserting this value of $g(x)$ into equation (11) for the potential, applying the slender-body approximation (radius approaches zero), and integrating yield

$$\varphi = \left[U\alpha + \overline{w}(x)\right] \frac{R^2 \sin \theta}{r} \tag{13}$$

On the body $(r = R)$, equation (13) reduces to

$$\varphi = \left[U\alpha + \overline{w}(x)\right] R \sin \theta \tag{14}$$

Equations (13) and (14) represent the slender-body approximation for the case of a variable cross flow $\overline{w}(x)$.

Demonstration that $\int_0^{2\pi} w \, d\theta = 0$ for slender body section. -

The lift equation (10) is particularly simple when the second term reduces to zero. This reduction occurs when either R = constant (the section under consideration is cylindrical) or $\int_0^{2\pi} w \, d\theta = 0$. It will now be shown that $\int_0^{2\pi} w \, d\theta = 0$ is obtained when the afterbody is sufficiently slender that slender-body theory may be applied.

The upwash may be obtained by inserting equation (13) into equation (8) and performing the indicated differentiation. The result is

$$w = \left[U\alpha + \overline{w}(x)\right] R^2/r^2(\cos^2\theta - \sin^2\theta) \tag{15}$$

or on the body $(r = R)$,

$$w = \left[U\alpha + \overline{w}(x)\right] (\cos^2\theta - \sin^2\theta) \tag{16}$$

which immediately leads to the result

$$\int_0^{2\pi} w \, d\theta = 0$$

wherever slender-body theory is applicable.

Applications

Slender pointed body of revolution. - If, in addition to being slender everywhere, the body of revolution tapers to a point at the forward end, then $\int_0^{2\pi} w \, d\theta = 0$ and $\varphi_1 = 0$. Thus the lift equation (10) reduces to

$$L = \frac{2\pi q R_2 \varphi_2}{U \sin \theta} \tag{17}$$

With the slender-body value for φ_2 (equation (14)), the final result is

$$L = 2qA_2 \left(\alpha + \frac{\overline{w}_2}{U}\right) \tag{18}$$

where A_2 is the area of the base of the body. Thus the lift of a pointed slender body in an upwash field depends on only the upwash and the cross-sectional area at the base.

Open-nose bodies and cylindrical afterbodies of bodies. - For a circular cylinder $(dR/dx = 0)$, the lift from equation (10) becomes

$$L = \frac{2q\pi R}{U} \frac{\varphi_2 - \varphi_1}{\sin \theta} \tag{19}$$

If the potential at the base of the cylinder is given by the slender-body value (equation (14) with $\overline{w} = 0$), the lift is the same as that of a slender-pointed body with the same base area because φ_1 is zero. Indication of the extent to which use of the slender-body value is justified may be obtained from reference 5 where an exact solution of the linearized differential equation (equation (1)) has been obtained using operational methods for the flow past finite bodies. Ward's results for the lift of a cylinder of length l_0 indicate that the slender-body lift is realized within 2 percent for $l_0/\beta R > 8$.

The lift of a cylindrical afterbody of a body is given by equation (19) where φ_1 is the potential on the body at the start of the aftersection. The lift of the afterbody would be zero if φ_1 and φ_2 were both taken to be the slender-body values because φ_1 would then equal φ_2. To obtain a more accurate value for the lift of the afterbody, φ_1 should be obtained by more exact methods, such as the

stepwise procedure of reference 3. In the EXAMPLES section, the lift of a cone-cylinder model is computed as a function of the cone angle by this procedure.

If in the vicinity of the lip the body is assumed to be quasi-cylindrical $(dR/dx \approx 0)$, the second term in equation (10) will be approximately zero; if the body is slender, the term will still be zero farther downstream because $\int_0^{2\pi} w \, d\theta = 0$ as shown. Lighthill points out in reference 6 that the discontinuity at the lip of an open-nose body affects only the region directly behind it for a distance of the order of the diameter of the body. The flow then behaves as if the open-nose body were a pointed body with a continuous slope. By use of operational methods, reference 6 shows that the lift of an open-nose body of sufficiently large fineness ratio is given by the slender-body value.

Afterbodies of wing-body combinations. - The analysis used for a body of revolution may be considered to apply equally well to a wing-body combination provided the potential φ is no longer restricted to the form $\sin\theta \, G(x,r)$. Consequently all the earlier formulas not depending on this restriction still apply. In particular, equation (9) must now be used in place of equation (10). The lift of the portion of the body behind the wing trailing edge of a wing-body combination may be determined from equation (9) with φ_1 equal to the potential on the body at the wing trailing edge. In order to satisfy the basic assumption of constant interference downwash and sidewash in each transverse plane around the body (due in this case to the wing and its wake), the diameter of the afterbody should be small compared with the wing span. Reference 7 gives the complex stream potential for a slender body of revolution with small-aspect-ratio triangular wings mounted on the cylindrical part of the body. The velocity potential is obtained by evaluating the complex stream potential on the body since the stream function is zero on the body. The result is

$$\varphi_1 = U\alpha \left[\sqrt{\left(b + \frac{R^2}{b}\right)^2 - 4R^2 \cos^2\theta} - R \sin\theta\right] \tag{20}$$

where b is the maximum semispan of the wing and R is the radius of the cylindrical part of the body. The slender-body approximation to the surface potential at the base of the afterbody is (equation (14))

$$\varphi_2 = (U\alpha + \overline{w}_2) R_2 \sin\theta$$

where $\overline{w}_2$ is the induced upwash velocity generated by the wing. These values of φ_1 and φ_2 may now be substituted into the first term of equation (9) for the lift. The second term in equation (9) is zero because $\int_0^{2\pi} w \, d\theta$ vanishes as a consequence of the slenderness. The result for the lift of an afterbody of a slender wing-body combination is found to be

$$L = 2q\alpha \left[A_1 + A_2 \left(1 + \frac{\overline{w}_2}{U\alpha}\right) - 2R_1\left(b - \frac{R_1{}^2}{b}\right) - 2\left(b + \frac{R_1{}^2}{b}\right)^2 \tan^{-1}\left(\frac{R_1}{b}\right)\right] \tag{21}$$

The lift of a cylindrical afterbody for the limiting case where the vortex sheet is displaced sufficiently far from the afterbody that the downwash induced by the wing at the base of the afterbody is negligible $(\overline{w}_2/U\alpha \approx 0)$ is compared in figure 2 with the lift of a slender wing-body combination with no afterbody. The assumption of small R/b is violated in the region where the radius of the body approaches the semispan. However, the lift of the afterbody approaches zero in this region and since the lift given by equation (21) also goes to zero, equation (21) may be considered a good approximation to the lift over the complete range. The lift of the wing-body combination is obtained from reference 4 and is presented as the ratio of the lift of the combination to the lift of a pointed low-aspect-ratio wing. The lift of the wing is

$$C_{L_W} = 2\alpha\pi \frac{b^2}{S} \tag{22}$$

Combinations of bodies. - Because the linearized differential equation of motion is assumed to apply, the solution for a combination of bodies is a linear superposition of the solutions for the bodies alone and for the interference effects between the bodies. The boundary condition to be satisfied is that the normal velocity at the surface of the bodies is zero.

In order to determine the interference lift for the bodies in combination it is necessary to know the disturbance one body produces on the other. In particular, the upwash and pressure field of one body contribute to the lift of the other body. The interference pressure field can be computed from the interference upwash field by integration of the irrotationality condition

$$\frac{\partial \overline{u}}{\partial z} = \frac{\partial \overline{w}}{\partial x}$$

to determine $\overline{u}$; the pressure is obtained from equation (3).

Computation of interference upwash

Several methods may be used to calculate the upwash field generated by a body at zero angle of attack and at angles of attack. For a body at zero angle of attack the method of reference 8 may be applied to determine the upwash. The velocity potential for the supersonic flow about a body at zero angle of attack is given by

$$\chi = -\int_0^{x-\beta r} \frac{f(\xi)d\xi}{\sqrt{(x-\xi)^2-\beta^2r^2}} \tag{23}$$

where $f(x)$ is the local strength of the source distribution. The integral expression for the upwash is

$$w = \frac{\sin\theta}{r}\int_0^{x-\beta r} \frac{f'(\xi)(x-\xi)d\xi}{\sqrt{(x-\xi)^2-\beta^2r^2}} \tag{24}$$

A first approximation for the source strength of a slender body is

$$f(x) = UR\frac{dR}{dx} \tag{25}$$

Equation (24), with the source strength given by equation (25), can be integrated directly for a given body.

An analogous procedure may also be applied for nonzero angle of attack; that is, the slender-body value of $g(x)$ (equation (12) with $\bar{w} = 0$) for a given body is substituted into the integral expression for the upwash

$$w = -\frac{\sin^2\theta}{r^2}\int_0^{x-\beta r} \frac{g'(\xi)(x-\xi)^2d\xi}{\sqrt{(x-\xi)^2-\beta^2r^2}} + \frac{\cos^2\theta}{r^2}\int_0^{x-\beta r} \frac{g(\xi)(x-\xi)d\xi}{\sqrt{(x-\xi)^2-\beta^2r^2}} \tag{26}$$

and the integration is performed without letting the radius approach zero as before. The result is thus dependent on Mach number, whereas the upwash computed by the slender-body approximation (equation (15) with $\bar{w} = 0$) is not.

A more accurate evaluation of the distribution functions $f(x)$ and $g(x)$ is required for bodies not necessarily slender. For such bodies a method is presented in references 3 and 9 for evaluating the upwash by a stepwise procedure, and the stepwise procedure is extended to open-nose bodies in reference 10. For a parabolic body, a comparison

is presented in the EXAMPLES section of the incremental upwash due to angle of attack as computed by slender-body theory (equation (15) with $\bar{w} = 0$), by the more accurate stepwise procedure of reference 3, and by the intermediate procedure of using the slender-body approximation for $g(x)$ in the integral expression for the upwash.

Lift due to interference upwash

The calculation of the portion of the lift on a slender body due to the known upwash field $\bar{w}$ from another body is similar to the afterbody problem in that the upwash varies along the body. The lift due to $\bar{w}$ is obtained in the same manner except that $\varphi_1 = 0$. The upwash in each transverse plane is assumed constant and equal to its value at the center line. The lift is then given by equation (10) with

$$\varphi_2 = U\alpha \frac{\bar{w}_2}{U\alpha} R_2 \sin \theta$$

and

$$\int_0^{2\pi} w \, d\theta = 0$$

according to slender-body theory. The lift is thus

$$L = 2q\alpha A_2 \frac{\bar{w}_2}{U\alpha} \tag{27}$$

The same result is obtained for an open-nose body in a varying upwash field if the body is quasi-cylindrical $(dR/dx \approx 0)$ near the lip.

The internal lift for an open-nose body of length substantially greater than β times the diameter with supersonic flow at the inlet is found from momentum consideration to be

$$L = 2\alpha q A_1$$

provided there are no internal losses and the flow is discharged at the free-stream static pressure. Generally this will not be the case and terms must be included to correct for the internal axial forces. The lift acts essentially at the nose and the internal lift for an open-nose body in a varying upwash field is obtained simply by replacing the angle of attack by the ratio of the upwash to free-stream velocity at the nose. Thus the internal lift is

$$L = 2\alpha \frac{\overline{w}_1}{U\alpha} qA_1 \tag{28}$$

In this analysis it is assumed that the portion of the lift of a body that results from the upwash generated by a second body due to the presence of the first body is negligible; in other words, only the primary interference effects are considered. In the section EXAMPLES the secondary interference effects are examined for a cylinder-cylinder combination.

Buoyant lift due to interference

The buoyant portion of the lift of a body due to the variable pressure field from another body is obtained from the second integral B of equation (5). Expanding the x-perturbation velocity $\overline{u}$ of the pressure field in a Taylor's series about the horizontal plane through the center line of the body in question yields

$$\overline{u} = (\overline{u})_{z=z_0} + (z - z_0)\left(\frac{\partial\overline{u}}{\partial z}\right)_{z=z_0} + \frac{(z - z_0)^2}{2!}\left(\frac{\partial^2\overline{u}}{\partial z^2}\right)_{z=z_0} + \frac{(z - z_0)^3}{3!}\left(\frac{\partial^3\overline{u}}{\partial z^3}\right)_{z=z_0} + \ldots \tag{29}$$

where z_0 is the z-coordinate of the center line of the body. The terms in equation (29) involving even derivatives do not contribute to the lift, because they are symmetric about the $z = z_0$ plane. If it is assumed that

$$\frac{(z - z_0)^3}{3!}\left(\frac{\partial^3\overline{u}}{\partial z^3}\right)_{z=z_0} \ll (z - z_0)\left(\frac{\partial\overline{u}}{\partial z}\right)_{z=z_0}$$

then that part of the $\overline{u}$-velocity which contributes to the lift is approximately

$$\overline{u} = (z - z_0)\left(\frac{\partial\overline{u}}{\partial z}\right)_{z=z_0} = R \sin\theta\left(\frac{\partial\overline{u}}{\partial z}\right)_{z=z_0}$$

With the aid of the irrotationality condition $\frac{\partial\overline{u}}{\partial z} = \frac{\partial\overline{w}}{\partial x}$, the previous expression becomes

$$\overline{u} = R \sin\theta\left(\frac{\partial\overline{w}}{\partial x}\right)_{z=z_0}$$

Inserting the value of $\bar{u}$ into the expression for the buoyant lift (term B in equation (5)) and integrating with respect to θ yield, with $\bar{w} = \bar{w}(x)$,

$$B = \frac{2q\pi}{U} \int_{x_1}^{x_2} R^2 \left(\frac{\partial \bar{w}}{\partial x}\right)_{z=z_0} dx \tag{30}$$

If the body is a cylinder or a quasi cylinder, the buoyant force due to the pressure field is

$$B = 2q\bar{A}\alpha\left(\frac{\bar{w}_2}{U\alpha} - \frac{\bar{w}_1}{U\alpha}\right) \tag{31a}$$

or

$$\left(C_L\right)_B = 2\alpha\left(\frac{\bar{w}_2}{U\alpha} - \frac{\bar{w}_1}{U\alpha}\right) \tag{31b}$$

where $\bar{A}$ is the mean cross-sectional area.

Equations (30) and (31) were obtained by expanding $\bar{u}$ in a Taylor's series; hence they are not valid in regions where a discontinuity in the u-velocity is present such as occurs, for example, at the intersection of the lip shock from an open-nose body with another body. The buoyant force, however, may be determined by applying equation (30) or (31), as the case may be, a suitable distance behind the intersection; then the buoyant force on the excluded area, associated with the shock, is evaluated separately and added thereto. The buoyant force associated with the shock is approximated herein by integrating the pressure as if it acted on the projected area (see following sketch) of the intersection of the shock with the body on the plane normal to the plane passing through the center lines of the bodies, and then resolving the force in the lift direction.

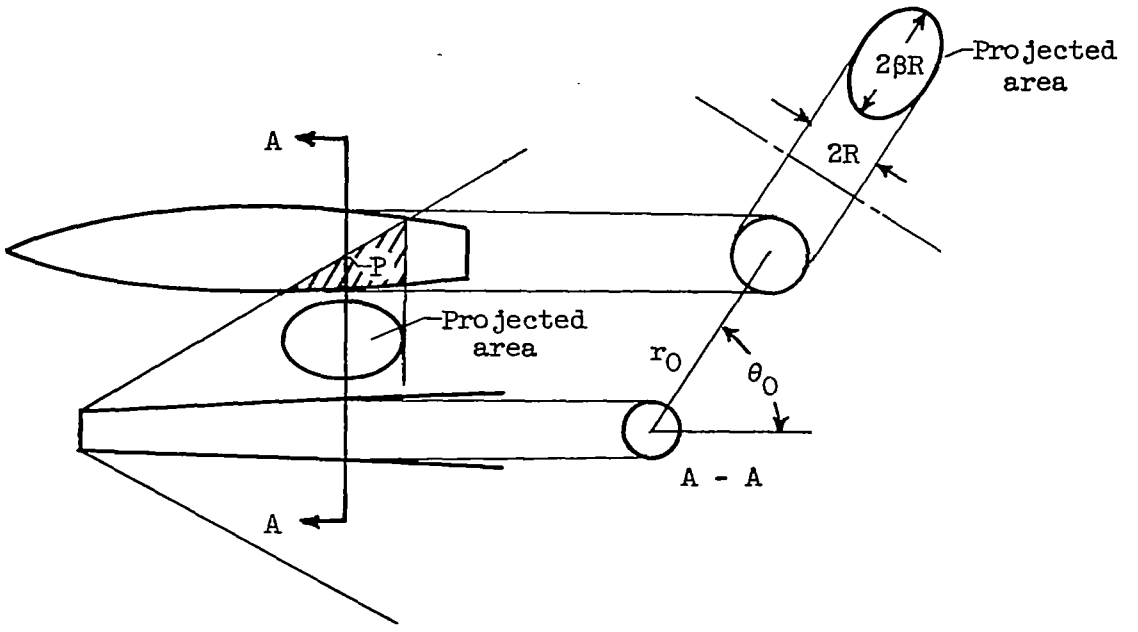

It is assumed that $\bar{u}$ and $\bar{w}$ are constant over the shaded surface area in the preceding sketch and have the values appropriate to the center line point P immediately behind the shock. This assumption implies that the body radius is relatively small compared with the separation of the bodies. For a slender body, the projected area is an ellipse with axes R and βR. By virtue of the assumption on $\bar{u}$, the effective pressure acting on the area is constant, having the value given at the center line on the downstream side of the shock and zero on the upstream side. The value of the pressure on the downstream side of the shock is determined in appendix C using the same procedure as that used in reference 11 for the case of the zero angle of attack. The pressure coefficient is

$$\frac{\Delta p}{q} = -\frac{2\alpha}{\beta}\sqrt{\frac{R}{r_0}}\sin\theta_0 \tag{32}$$

where the subscript 0 refers to the open-nose body. Since the projected area on which this pressure acts is $\beta\pi R^2$, the buoyant force due to the discontinuity in u at the shock intersection with the body is

$$\left(\Delta C_L\right)_B = -2\alpha\sqrt{\frac{R}{r_0}}\sin^2\theta_0 \tag{33}$$

Equation (33) together with equation (30) or (31) (which apply beyond the shaded region in the sketch) yields the total buoyant lift when a discontinuity in the $\bar{u}$-velocity is present.

If the body is a cylinder or a quasi cylinder in the disturbed region of the pressure field so that equation (31b) may be used, the expression for the buoyant lift with the lift due to the wave discontinuity is given by

$$\left(C_L\right)_B = \frac{2\bar{w}_2}{U} - \frac{2\bar{w}_1}{U} + \frac{\Delta p}{q}\frac{\tilde{A}}{\pi R^2}$$

where $\tilde{A}$ is the projected area on which the shock pressure acts and $\bar{w}_1$ is the upwash immediately downstream of the wave. But for weak waves the flow deflection and pressure coefficient are related by

$$\frac{\Delta p}{q} = \frac{2\lambda}{\beta} = \frac{2}{\beta \sin \theta_0}\frac{\bar{w}_1}{U}$$

where λ is the flow deflection angle through the wave. Hence the contribution of the wave to the buoyant lift will be zero if

$$\frac{\tilde{A}}{\pi R^2} = \beta \sin \theta_0 \tag{34}$$

If the effective projected area is as assumed in the sketch, the relation (34) is obtained. Thus, for this case, the correct buoyant lift is obtained by applying equation (31) with $w_1 = 0$.

EXAMPLES

Lift of Cone-Cylinder Body

The lift of the cone part of the body as given in reference 3 is

$$C_L = 2\alpha\left(1 - \frac{\cosh^{-1}\frac{x}{\beta R}}{\frac{x}{\beta R}\sqrt{\left(\frac{x}{\beta R}\right)^2 - 1} + \cosh^{-1}\frac{x}{\beta R}}\right) \tag{35}$$

where x is the length of the cone. The lift of the cylindrical aftersection may be obtained from equation (19) with φ_1 equal to the potential at the base of the cone and φ_2, the slender-body value (equation (14) with $\bar{w} = 0$). The potential φ_1 on the body is

$$\varphi_1 = \frac{\frac{x}{\beta R}\sqrt{\left(\frac{x}{\beta R}\right)^2 - 1} - \cosh^{-1}\frac{x}{\beta R}}{\frac{x}{\beta R}\sqrt{\left(\frac{x}{\beta R}\right)^2 - 1} + \cosh^{-1}\frac{x}{\beta R}} U\alpha R \sin\theta \tag{36}$$

Substituting equation (14) with $\bar{w} = 0$ and equation (36) into equation (19) and combining the result with equation (35) yield the lift of the cone-cylinder which, expressed in coefficient form based on the area of the cylinder, is

$$C_L = 2\alpha\left(1 + \frac{\cosh^{-1}\frac{x}{\beta R}}{\frac{x}{\beta R}\sqrt{\left(\frac{x}{\beta R}\right)^2 - 1} + \cosh^{-1}\frac{x}{\beta R}}\right) \tag{37}$$

In figure 3 the lift of the cone-cylinder and the lift of a cone are plotted as a function of the parameter $x/\beta R$. As would be expected, the lift of the cone and the cone-cylinder approach the slender-body value as the cone angle decreases.

Interference Lift Between Two Cylinders in Combination

The lift of two semi-infinite cylinders of the same radius mounted in the vertical plane and starting at the same streamwise coordinate is computed to obtain some information concerning the magnitude and the method of computation of the interference lift between bodies. There is no loss in generality if the cylinders are assumed to be in the vertical plane, and the computation is somewhat shorter. Also, if a symmetrically mounted vertical strut joins the bodies, the strut carries no lift and produces no significant interference.

The lift of one cylinder in the presence of the upwash field from the other cylinder is computed from equation (27). In figure 4 the upwash at various distances from a cylinder in the vertical plane as computed by the method of reference 10 is presented. Near the lip, values are improved by the method given in appendix C. For a short cylinder-cylinder combination, the appropriate value of the upwash to be used at the base would be the value given by figure 4. However, the upwash approaches the slender-body value rather rapidly downstream of the lip shock. In this example, therefore, the slender-body upwash $\bar{w}_2 = -U\alpha R^2/z_0^2$ is used. The lift due to the upwash field in coefficient form and based on the cross-sectional area of the cylinder is

$$C_L = -2\alpha \frac{R^2}{z_0^2} \tag{38}$$

where z_0 is the distance between the center lines of the cylinders.

The interference lift given by equation (38) (which may be regarded as the first iteration of the total interference lift) can be considered to result from a certain distribution of doublets along the axis of the body. This doublet distribution produces an upwash field as though (in slender-body approximation) the upper body were moving in the negative z-direction with velocity $\alpha U z_0^2/R^2$. The upwash induced at the lower body due to this motion at a distance z_0 below the center line of the upper body is a fraction z_0^2/R^2 of this. Thus the lift of the lower cylinder in the presence of the upwash from the upper cylinder due to the presence of the lower cylinder is given by

$$C_L = 2\alpha \frac{R^4}{z_0^4} \tag{39}$$

The complete solution for the lift due to the upwash for both cylinders is then

$$\begin{aligned} C_L &= -4\alpha\left(\frac{R^2}{z_0^2} - \frac{R^4}{z_0^4} + \frac{R^6}{z_0^6} - \cdots + (-1)^{n+1}\frac{R^{2n}}{z_0^{2n}} - \cdots\right) \\ &= -4\alpha \frac{\dfrac{R^2}{z_0^2}}{1 + \dfrac{R^2}{z_0^2}} \end{aligned} \tag{40}$$

The validity of this equation deteriorates as z_0 diminishes because of the neglect of the gradient in upwash across each body. In the limiting case when the cylinders are touching $(R/z_0 = 1/2)$, equation (40) is certainly invalid quantitatively, but the behavior of the iterations is probably qualitatively correct. For this limiting case equation (40) becomes

$$C_L = -4\alpha\left(\frac{1}{4} - \frac{1}{16} + \frac{1}{64} - \cdots\right) = -\frac{4}{5}\alpha \tag{41}$$

The magnitude of the terms of higher order than $R^2/z_0{}^2$ for the contiguous case is 5 percent of the external lift of the cylinder alone. An exact value for the upwash interference lift at small separation z_0, within the framework of slender-body theory, may be found by considering the two-dimensional flow around two cylinders. This flow is equivalent to a doublet external to a cylinder. By use of the method of images (reference 12), the potential in series form (because each reflected doublet violates the boundary condition) may be obtained and hence the lift. The result for the interference lift is

$$C_L = -4\alpha\left[\frac{R^2}{z_0{}^2} - \frac{\frac{R^4}{z_0{}^4}}{\left(1 - \frac{R^2}{z_0{}^2}\right)^2} + \frac{\frac{R^6}{z_0{}^6}}{\left(1 - \frac{2R^2}{z_0{}^2}\right)^2} - \frac{\frac{R^8}{z_0{}^8}}{\left(1 - \frac{3R^2}{z_0{}^2} + \frac{R^4}{z_0{}^4}\right)^2} + \ldots\right] \tag{42}$$

For the contiguous case the interference lift due to the upwash field is

$$C_L = -4\alpha\left[\frac{1}{4} - \frac{1}{9} + \frac{1}{16} - \frac{1}{25} + \ldots + (-1)^{n+1}\frac{1}{(n+1)^2} - \ldots\right] \tag{43}$$

$$= -4\alpha(1 - \pi^2/12)$$

The magnitude of higher-order terms for this method is about 7 percent of the external lift of the cylinder alone. The difference between equations (43) and (41) is due to the fact that in obtaining equation (40) the boundary condition is only approximately satisfied.

A procedure analogous to that used to obtain equations (40) and (42) may be applied to obtain expressions for the buoyant lift. The buoyant lift is equal to the interference lift due to upwash. For this example, the internal interference lift is zero because the noses of the cylinders are ahead of the disturbance fields.

The total lift of the combination, including the internal lift for the isolated cylinders, with terms of higher order than $R^2/z_0{}^2$ neglected, is

$$C_{L_c} = 8\alpha\left(1 - \frac{R^2}{z_0{}^2}\right) \tag{44}$$

The interference lift may be expressed in terms of an interference ratio

$$i = \frac{\frac{dC_{L_c}}{d\alpha} - \frac{dC_{L_b}}{d\alpha}}{\frac{dC_{L_b}}{d\alpha}} = \frac{\frac{dC_{L_i}}{d\alpha}}{\frac{dC_{L_b}}{d\alpha}} = -\frac{R^2}{z_0{}^2} \tag{45}$$

where C_{L_b} is the lift of the isolated bodies.

It is interesting to note that the interference lift ratio for the case of the cylinders in the horizontal plane would be

$$i = \frac{R^2}{y_0{}^2} \tag{46}$$

Interference Lift Between Two Parabolic Bodies in Combination

In this example, the interference lift between two identical parallel parabolic bodies mounted in the vertical plane and at incidence angle α with respect to the free-stream is computed.

The upwash distribution about a parabolic body due to angle of attack may be computed either by slender-body theory, by the stepwise procedure of reference 3, or by the intermediate procedure of using the slender-body approximation for the $g(x)$ in the integral expression for the upwash (equation (26)). The equation of a parabolic body in dimensionless form is

$$R^* = \frac{2}{F^*}(1 - x^*)x^* \tag{47}$$

where

R^* $\beta R/l$

F^* fineness ratio$/\beta = F/\beta = l/2\beta R_{max}$

x^* x/l

l length of body pointed at both ends

The upwash in the vertical plane through the body center line obtained by the intermediate procedure for the parabolic body defined by equation (47) is

$$\frac{w}{U\alpha} = \frac{8}{F^{*2}z_0^{*2}}\left[\left(-\frac{x^*}{2} + x^{*2} - \frac{x^{*3}}{2} + \frac{23}{4}x^*z_0^{*2} - 4z_0^{*2}\right)\sqrt{x^{*2} - z_0^{*2}} + z_0^{*2}\left(3x^* - 3x^{*2} - \frac{9}{4}z_0^{*2} - \frac{1}{2}\right)\cosh^{-1}\frac{x^*}{z_0^*}\right] \tag{48}$$

where $z_0^* = \beta z_0/l$. This equation is applicable between the Mach cones from the pointed nose and end of the body; that is,

$$z_0^* \leq x \leq 1 + z_0^*$$

The upwash as computed by slender-body theory is

$$\frac{w}{U\alpha} = -\frac{R^2}{z_0^2} = \frac{-4(1 - x^*)^2x^{*2}}{F^{*2}z_0^{*2}} \text{ for } 0 \leq x^* \leq 1 \tag{49}$$

The comparison of equations (48) and (49) with the upwash computed using reference 3 for $F^* = 7.5$ and 12.5 and $z_0^* = 0.075$ and 0.125, respectively, is presented in figure 5. It is seen that the upwash given by equation (48) varies in the same manner with respect to magnitude and position as that obtained using the method of reference 3. Since the computation with equation (48) is faster, equation (48) is used herein for the interference lift calculations due to the upwash from the interfering body. The sign of the interfering upwash acting at the base of the primary body is important because it determines whether or not the incremental lift due to interference upwash is favorable. The upwash given by slender-body theory will always have the same sign for a given plane of symmetry, whereas the upwash given by both of the more exact methods changes sign (see fig. 5). For the calculation of the buoyant lift, the simpler equation (49) (rather than equation (48)) has been used in equation (30) because, for integrated values, the difference between the various curves is unimportant.

In figure 6 a contour plot of the interference ratio is presented for the case where the distance between the center lines of the bodies varies from $z_0^* = 0.075$ to $z^* = 0.150$ and one body moves downstream from $x^* = 0$ to $x^* = 0.3$ with respect to the other parabolic body. The length of each body is $0.8l$. The maximum lift curve slope occurs when the body axes are farthest apart and one body is at the most rearward station of the positions considered.

Interference Lift Between Open-Nose Body and a Parabolic Body in Combination

A contour plot of the interference ratio at a Mach number of 2 is presented in figure 7(a) for an open-nose body mounted above or below and downstream of a parabolic body. The bodies are parallel and at incidence angle α with respect to the free stream. All pertinent dimensions are shown in the figure. In figure 7(b) another open-nose body identical to the first is symmetrically added to the configuration and the interference ratio is presented for this arrangement.

For these plots, the upwash distribution about the parabolic body was computed from equation (48) with F equal to 15. For the open-nose body the upwash was determined using the method of reference 10. For the computation of the buoyant force, equation (31) was used with the mean radius determined by the amount of volume of the body in the disturbed field at a particular position. The lift of the isolated components was obtained using slender-body theory (equation (18) with $\overline{w} = 0$).

Figure 7(a) indicates that for the positions considered, the maximum lift-curve slope occurs when the open-nose body is at the farmost aft and outboard station from the parabolic body. The same result is noted in figure 7(b) for the parabolic body - two open-nose body configuration.

As a matter of general interest, the interference lift at zero angle of attack is presented in figure 8 for the one open-nose configuration. When the open-nose body is mounted above the parabolic body, the lift is negative; and when it is mounted below, the lift has the same magnitude but the opposite sign. In the calculation of the lift the upwash about the parabolic body was determined from reference 8, and the upwash about the open-nose body was determined from reference 10.

Lewis Flight Propulsion Laboratory
National Advisory Committee for Aeronautics
Cleveland, Ohio, December 17, 1951

APPENDIX A

SYMBOLS

The following symbols are used in this report:

A	cross-sectional area of body of revolution, πR^2
b	maximum semispan
B	buoyant lift (second integral in equation (5))
C_L	lift coefficient, lift/qA_2
F	fineness ratio of parabolic body of revolution, length/maximum thickness
F_m, G_m	functions of x and r (defined in appendix B)
$f(x)$	local strength of source distribution
$g(x)$	derivative of local strength of doublet distribution
i	interference lift ratio
L	lift due to angle of attack and upwash (first integral in equation (5))
l	length of body pointed at both ends
M	Mach number
n	integer
Δp	deviation of local pressure from free-stream pressure
δp	principal part of Δp contributing to lift
q	free-stream dynamic pressure, $\frac{1}{2} \rho U^2$
R	radius of body
R_{max}	maximum radius of body
r	radial coordiante, $\sqrt{y^2 + z^2}$
S	wing area

t	integration variable
U	free-stream velocity
u,w	perturbation velocities in x- and z-directions, respectively
$\bar{u},\bar{v},\bar{w}$	perturbation velocity components due to interfering body
V	resultant velocity
V_R,V_θ,V_X	components of resultant velocity in r-, θ-, and x-directions, respectively
x,y,z	Cartesian coordiantes
α	angle of attack
β	cotangent of Mach angle of free stream, $\sqrt{M^2 - 1}$
γ	adiabatic exponent
θ	tangential coordiante, $\sin^{-1}(z/r)$
ξ	integration variable (x-coordinate of sources or doublets)
ρ	density
Φ	total perturbation potential for primary body
φ	portion of Φ contributing a nonzero value of lift
χ	portion of Φ corresponding to zero angle of attack
ψ	portion of Φ due to sidewash

Subscripts:

0	coordinate measured from axis of body generating disturbance field
1	start of body
2	base of body
b	bodies alone
c	bodies in combination

i due to interference

w wing

Subscript coordinates indicate partial differentiation with respect to subscript variable.

Primes denote ordinary differentiation.

APPENDIX B

FORM OF VELOCITY POTENTIAL FOR BODY OF REVOLUTION AND PRINCIPAL PART OF PRESSURE CONTRIBUTING TO LIFT

The total perturbation potential for the primary body is assumed to satisfy the governing equation for small-disturbance, isentropic irrotational flow

$$\beta^2\Phi_{xx} - \Phi_{yy} - \Phi_{zz} = 0 \tag{B1}$$

The general solution of equation (B1) as given in reference 13 is

$$\Phi(x,u,\theta) = \sum_{m=0}^{\infty} \cos m\,\theta\, F_m(x,r) + \sum_{m=0}^{\infty} \sin m\,\theta\, G_m(x,r)$$

where

$$\left.\begin{aligned}
F_m &= r^m\left(\frac{1}{r}\frac{\partial}{\partial r}\right)^m \int_{\cosh^{-1}\frac{x}{\beta r}}^{0} f_m(x - \beta r\cosh t)dt \\
&= -\,r^m\left(\frac{1}{r}\frac{\partial}{\partial r}\right)^m \int_0^{x-\beta r} \frac{f_m(\xi)d\xi}{\sqrt{(x-\xi)^2 - \beta^2 r^2}} \\
G_m &= r^m\left(\frac{1}{r}\frac{\partial}{\partial r}\right)^m \int_{\cosh^{-1}\frac{x}{\beta r}}^{0} g_m(x - \beta r\cosh t)dt \\
&= -\,r^m\left(\frac{1}{r}\frac{\partial}{\partial r}\right)^m \int_0^{x-\beta r} \frac{g_m(\xi)d\xi}{\sqrt{(x-\xi)^2 - \beta^2 r^2}}
\end{aligned}\right\} \tag{B2}$$

The linearized boundary condition on the body is

$$(\Phi_r)_{r=R} = -\,(U\alpha + \overline{w})\sin\theta - \overline{v}\cos\theta + U\frac{dR}{dx} \tag{B3}$$

This boundary condition is correct to the order $\alpha\, dR/dx$ or $(dR/dx)^2$. Because of the form of the boundary condition, the total potential must be given by

$$\begin{aligned}\Phi &= \sin\theta\, G_1 + \cos\theta\, F_1 + F_0 \\ &= \varphi + \psi + \chi\end{aligned} \tag{B4}$$

(with $\bar{v} = \bar{v}(x)$, $\bar{w} = \bar{w}(x)$). The part of the pressure contributing to the lift will be obtained to the order of accuracy of the linear partial differential equation and the linearized boundary condition. The exact form of the pressure coefficient is given by the compressible Bernoulli equation

$$\frac{\Delta p}{q} = \frac{2}{\gamma M^2}\left\{\left[1 + \frac{\gamma - 1}{2} M^2\left(1 - \frac{V^2}{U^2}\right)\right]^{\frac{\gamma}{\gamma-1}} - 1\right\} \tag{B5}$$

Expanding equation (B5) yields the following approximate expression for the pressure coefficient:

$$\frac{\Delta p}{q} = \left(1 - \frac{V^2}{U^2}\right) + \frac{M^2}{4}\left(1 - \frac{V^2}{U^2}\right)^2 \tag{B6}$$

This equation is correct to the second order in $1 - V^2/U^2$. The net velocity at any point is

$$V^2 = V_X{}^2 + V_R{}^2 + V_\Theta{}^2$$

where

$$V_X = U + \bar{u} + \Phi_x \tag{B7a}$$

$$V_R = (U\alpha + \bar{w})\sin\theta + \bar{v}\cos\theta + \Phi_r \tag{B7b}$$

$$V_\Theta = (U\alpha + \bar{w})\cos\theta + \bar{v}\sin\theta + \frac{\Phi_\theta}{r} \tag{B7c}$$

Substituting equation (B3) into (B7b) yields the net velocity in the radial direction of the body

$$V_R = U\frac{dR}{dx} \tag{B8}$$

Substituting equations (B8), (B7a), and (B7c) into the first term in equation (B6) yields, on the body,

$$\frac{\Delta p}{q} = -\left[\frac{2\bar{u}}{U} + \frac{\bar{u}^2}{U^2} + \frac{2\Phi_x}{U}\left(1 + \frac{\bar{u}}{U}\right) + \frac{\Phi_x{}^2}{U^2} + \left(\frac{dR}{dx}\right)^2 + \left(\alpha + \frac{\bar{w}}{U}\right)^2 \cos^2\theta + \right.$$

$$\frac{2\bar{v}}{U}\left(\alpha + \frac{\bar{w}}{U}\right)\cos\theta\sin\theta + \frac{\bar{v}^2}{U^2}\sin^2\theta + 2\left(\alpha + \frac{\bar{w}}{U}\right)\cos\theta\frac{\Phi_\theta}{Ur} +$$

$$\left. 2\frac{\bar{v}}{U}\sin\theta\frac{\Phi_\theta}{Ur} + \frac{\Phi_\theta{}^2}{U^2r^2}\right]_{r=R} \tag{B9}$$

The following terms in the approximate pressure coefficient yield nonzero values for lift when equation (B4) is substituted into (B9), the indicated differentiation is performed, the result is substituted into the lift integral

$$\text{Lift} = -q\int_{x_1}^{x_2}\int_0^{2\pi}\frac{\Delta p}{q}\sin\theta\, R\, d\theta\, dx \tag{B10}$$

and the integration with respect to θ is performed:

$$\frac{\delta p}{q} = -\frac{2\varphi_x}{U} - \frac{2\Phi_x\bar{u}}{U^2} - \frac{2\varphi_x\chi_x}{U^2} - \frac{2\bar{u}}{U} - \frac{\bar{u}^2}{U^2} \tag{B11}$$

All other terms integrate to zero. If the next term in the expansion of the pressure coefficient (equation (B6)) is included, by the same procedure

$$\frac{\delta p}{q} = -\frac{2\varphi_x}{U} + \frac{2\beta^2\Phi_x\bar{u}}{U^2} + \frac{2\beta^2\varphi_x\chi_x}{U^2} - \frac{2\bar{u}}{U} + \frac{\beta^2\bar{u}^2}{U^2} \tag{B12}$$

where the terms of higher order than those appearing in equation (B11) have been neglected. It can be shown from slender-body theory that φ_x/U, ψ_x/U, $\bar{u}/U$, and χ_x/U are of order $\alpha\, dR/dx$ or $(dR/dx)^2$.

Neglecting terms of higher order than $\alpha\, dR/dx$ or $(dR/dx)^2$ in equation (B12), where α and dR/dx are considered to be small and of the same order, yields

$$\frac{\delta p}{q} = -\frac{2\varphi_x}{U} - \frac{2\bar{u}}{U} = -\frac{2u}{U} - \frac{2\bar{u}}{U} \tag{B13}$$

The component potentials ψ and χ thus contribute only higher-order terms to the lift. The surviving component in equation (B4) is φ, which is due to α and $\bar{w}$ alone; the sidewash $\bar{v}$ does not enter.

Comparison of equations (B12) and (B13) indicates that at high Mach numbers some of the neglected terms may become as large as those retained.

APPENDIX C

PERTURBATION VELOCITY COMPONENTS IN VICINITY OF LIP SHOCK FROM AN INCLINED OPEN-NOSE BODY

The method used herein to estimate the velocity components in the vicinity of the lip shock from an open-nose body at angle of attack is similar to the technique used in reference 11 for the linearized treatment of the lip shock from an open-nose body at zero angle of attack. The boundary condition on the open-nose body in integral form may be written

$$(\varphi_r)_{r=R} = -\frac{\sin\theta}{R^2}\int_0^{x-\beta R}\frac{g'(\xi)(x-\xi)^2 d\xi}{\sqrt{(x-\xi)^2-\beta^2R^2}} = -U\alpha\sin\theta \tag{C1}$$

where the lip is located at $x = \beta R$. In the vicinity of the lip, $x - \beta R$ is very small compared with βR and thus equation (C1) reduces to

$$\frac{U\alpha\sqrt{2\beta R}}{\beta^2} = \int_0^{x-\beta R}\frac{g'(\xi)d\xi}{\sqrt{x-\beta R-\xi}} \tag{C2}$$

This is in the form of Abel's integral equation for the unknown function $g'(x)$; the solution, according to reference 14, is

$$g'(x) = \frac{U\alpha}{\beta^2\pi}\sqrt{\frac{2\beta R}{x}} \tag{C3}$$

when R is assumed to be approximately constant in the vicinity of the lip. Introducing equation (C3) into the expression for the upwash (equation (26)), restricting consideration to the vicinity of lip shock ($x - \beta r$ very much less than βr), and integrating yield

$$\frac{w}{U\alpha} = -\sin^2\theta\sqrt{\frac{R}{r}} + \cos^2\theta\left(\frac{x}{\beta r} - 1\right)\sqrt{\frac{R}{r}} \tag{C4}$$

In the integration of the last term in equation (26), the function $g(x)$ is given by the integral of equation (C3), which is

$$g(x) = \frac{2U\alpha\sqrt{2\beta R}}{\beta^2\pi}\sqrt{x} + C \tag{C5}$$

with the constant C equal to zero because $g(0) = 0$.

The u-velocity component in the vicinity of the shock is obtained by inserting equation (C3) into the integral expression for the u-velocity and neglecting $x - \beta r$ compared with βr as before. The result is

$$-\frac{2u}{U} = \frac{\Delta p}{q} = -\frac{2\alpha}{\beta} \sin \theta \sqrt{\frac{R}{r}} \tag{C6}$$

At the lip shock the upwash is zero when calculated by the method of reference 10. In figure 3 the upwash given by equation (C4) is joined by a dashed line to the values given by the method of reference 10 downstream of the lip shock. The slope of the dashed line is about the same as that given by reference 10, thus indicating the validity of the method of this appendix.

REFERENCES

1. Munk, Max. M.: The Aerodynamic Forces on Airship Hulls. NACA Rep. 184, 1924.

2. Jones, Robert T.: Properties of Low-Aspect-Ratio Pointed Wings at Speeds below and above the Speed of Sound. NACA Rep. 835, 1946. (Formerly NACA TN 1032.)

3. Tsien, Hsue-Shen: Supersonic Flow over an Inclined Body of Revolution. Jour. Aero. Sci., vol. 5, no. 12, Oct. 1938, pp. 480-483.

4. Spreiter, John R.: The Aerodynamic Forces on Slender Plane- and Cruciform-Wing and Body Combinations. NACA Rep. 962, 1950. (Formerly NACA TN's 1897 and 1662.)

5. Ward, G. N.: The Approximate External and Internal Flow past a Quasi-Cylindrical Tube Moving at Supersonic Speeds. Quart. Jour. Mech. and Appl. Math., vol. 1, pt. 2, June 1948, pp. 225-245.

6. Lighthill, M. J.: Supersonic Flow past Slender Bodies of Revolution the Slope of Whose Meridian Section is Discontinuous. Quart. Jour. Mech. and Appl. Math., vol. 1, pt. 1, March 1948, pp. 90-102.

7. Ward, G. N.: Supersonic Flow past Slender Pointed Bodies. Quart. Jour. Mech. and Appl. Math., vol. II, pt. 1, 1949, pp. 75-97.

8. Jones, Robert T., and Margolis, Kenneth: Flow over a Slender Body of Revolution at Supersonic Velocities. NACA TN 1081, 1946.

9. von Kármán, Theodor, and Moore, Norton B.: Resistance of Slender Bodies Moving with Supersonic Velocities, with Special Reference to Projectiles. (Trans. A.S.M.E., vol. 54, no. 23, Dec. 15, 1932, pp. 303-310.)

10. Brown, Clinton E., and Parker, Hermon M.: A Method for the Calculation of External Lift, Moment, and Pressure Drag of Slender Open-Nose Bodies of Revolution at Supersonic Speeds. NACA Rep. 808, 1945. (Formerly NACA ACR L5L29.)

11. Moore, Franklin: Linearized Supersonic Axially Symmetric Flow about Open-Nosed Bodies Obtained by Use of Stream Function. NACA TN 2116, 1950.

12. Milne-Thomson, L. M.: Theoretical Hydrodynamics. Macmillan and Co., Ltd. (London), 1938, pp. 220-221.

13. Lamb, Horace: Hydrodynamics. Dover Pub., 6th ed., 1945, p. 527.

14. Whittaker, E. T., and Watson, G. N.: Modern Analysis. The Macmillan Co., (New York), 1943, p. 229.

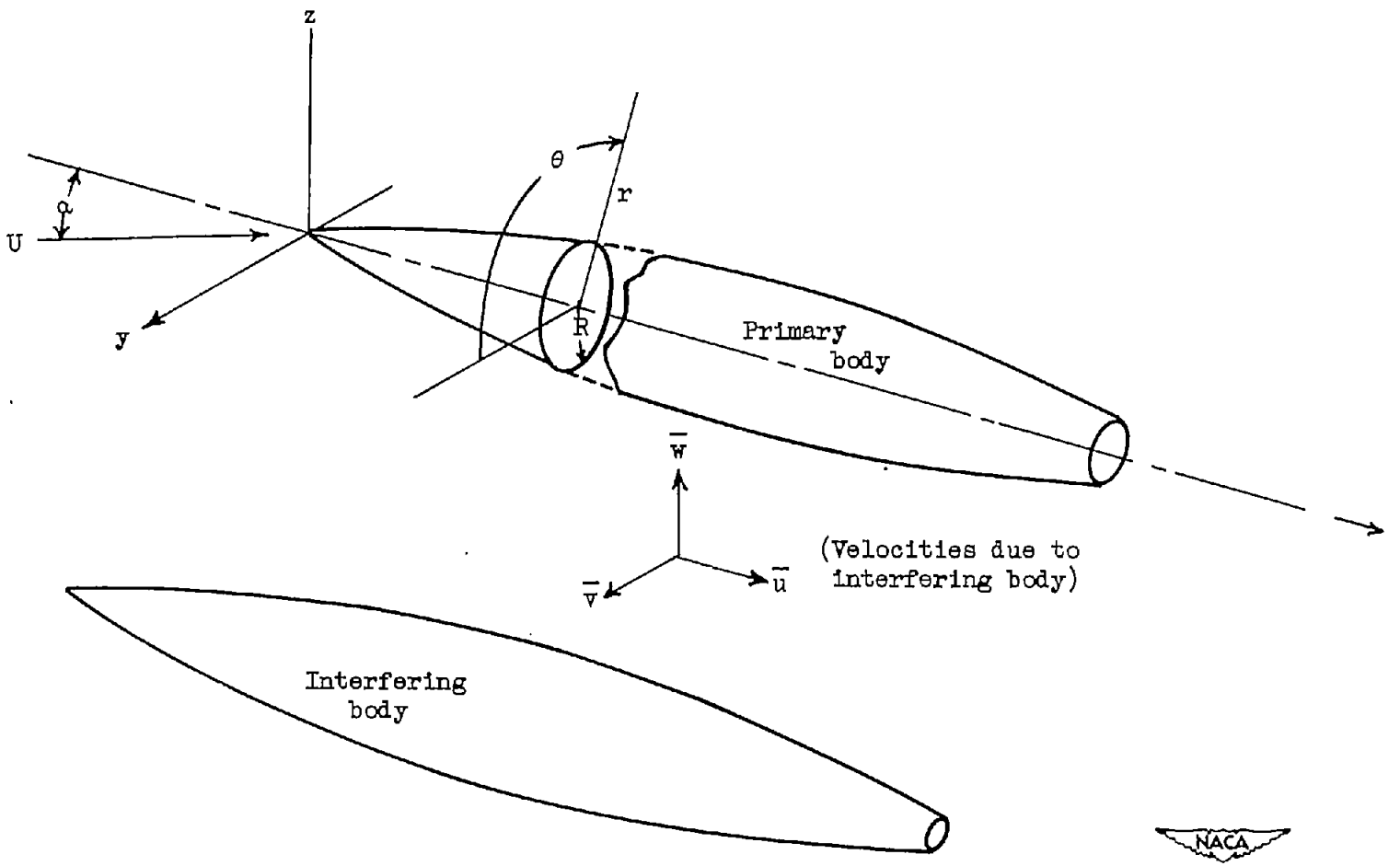

Figure 1. - Body of revolution at angle of attack in presence of disturbance velocity field from another body.

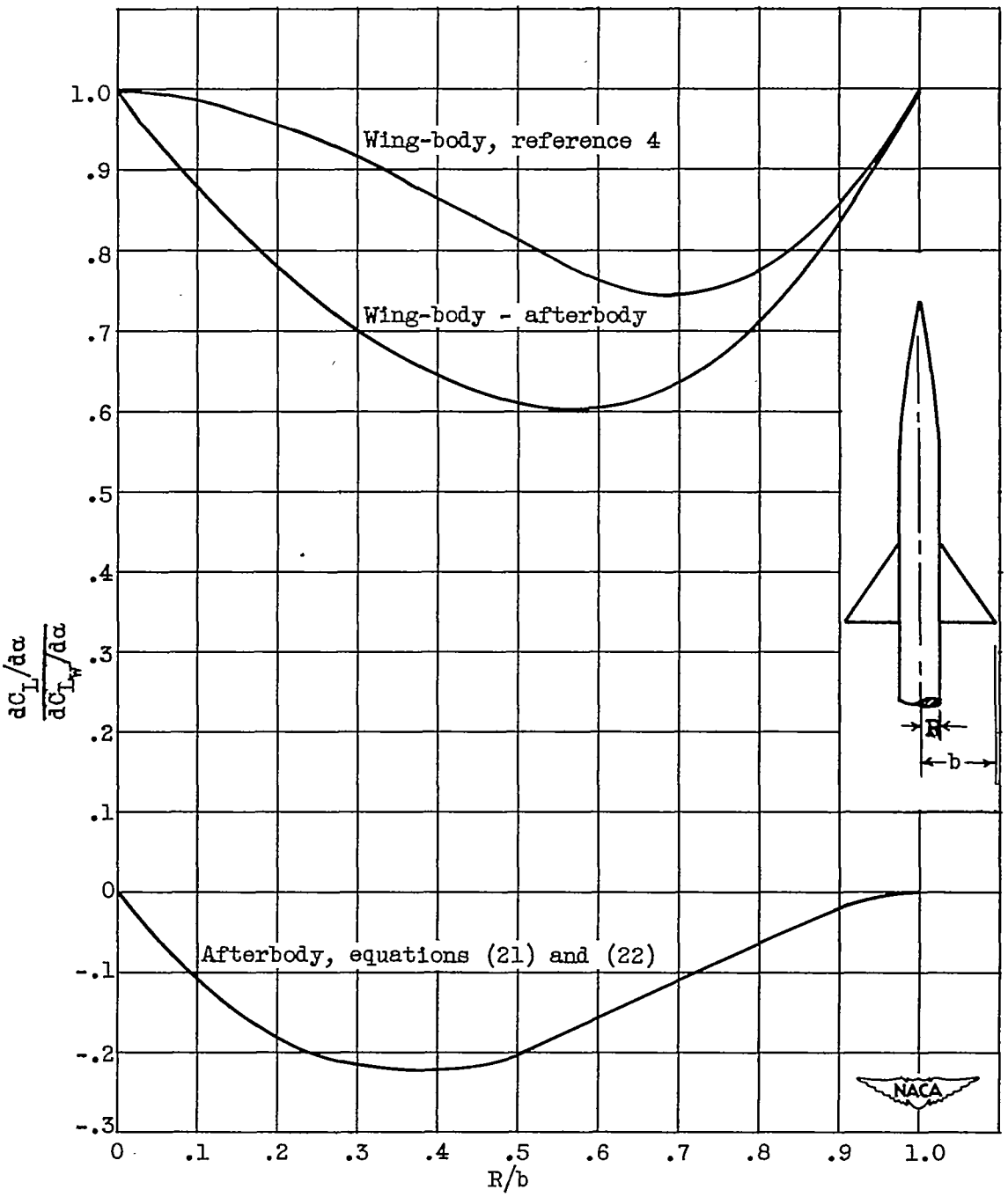

Figure 2. - Lift-curve slope ratio for wing-body - afterbody combination with $\overline{w}_2/U\alpha = 0$.

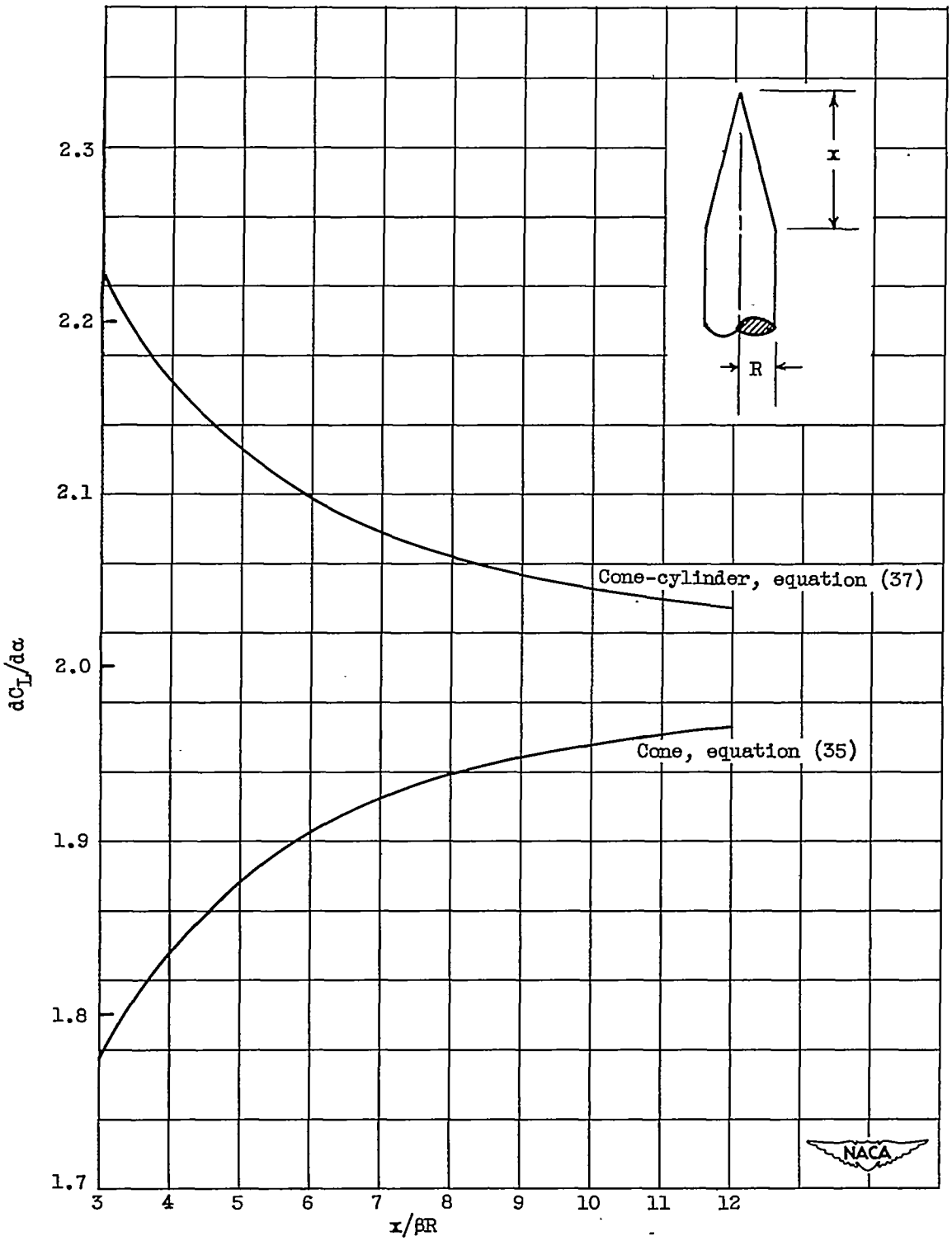

Figure 3. - Comparison of lift of cone-cylinder with lift of cone.

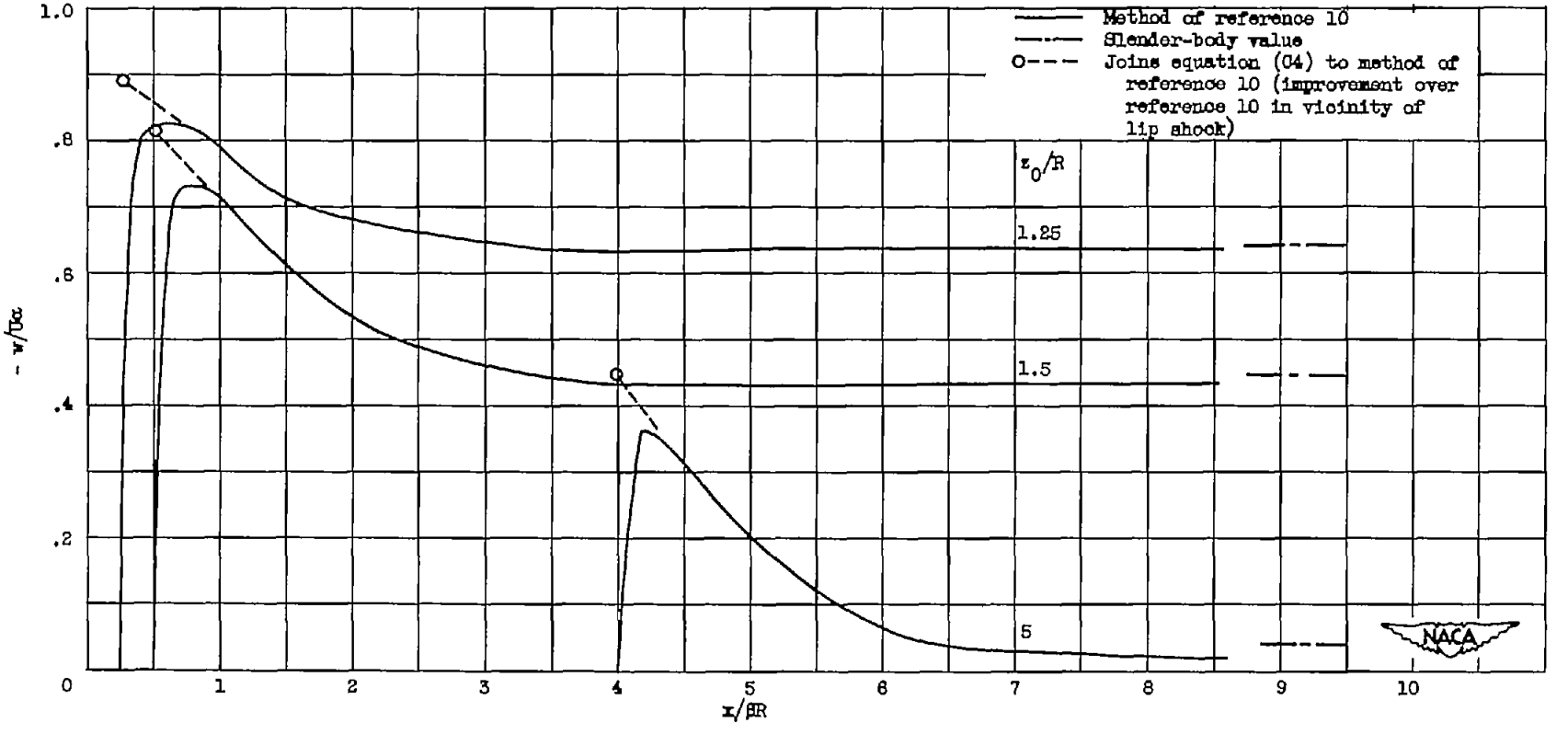

Figure 4. - Upwash distribution in vertical plane generated by cylinder.

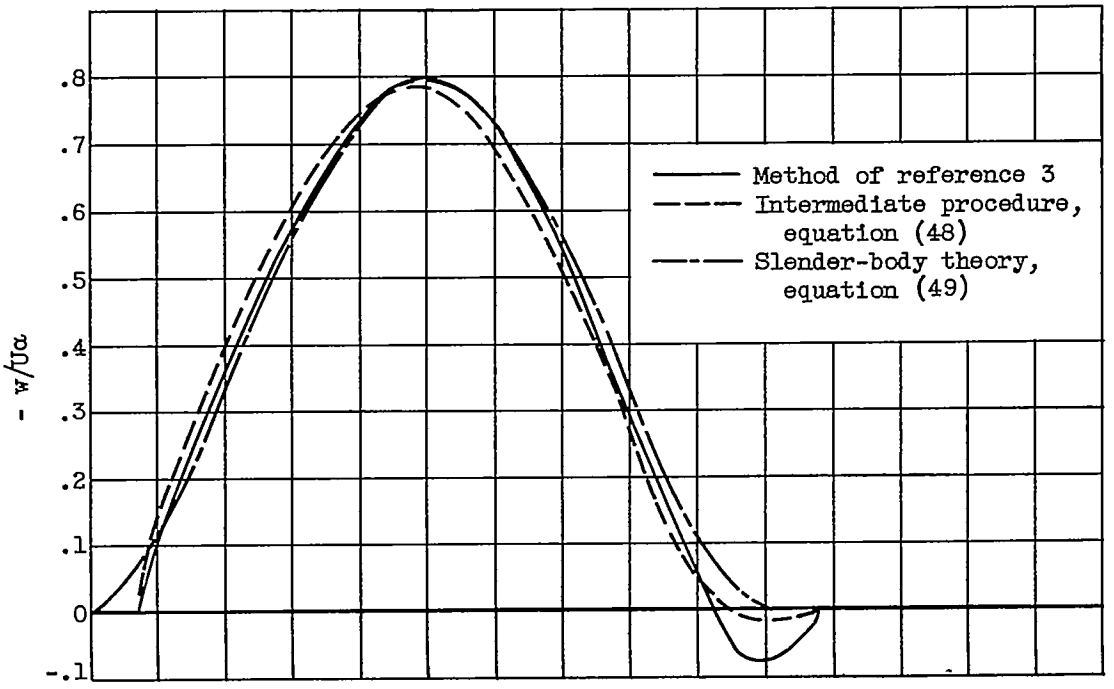

(a) $\beta z_0/l$, 0.075; F/β, 7.5.

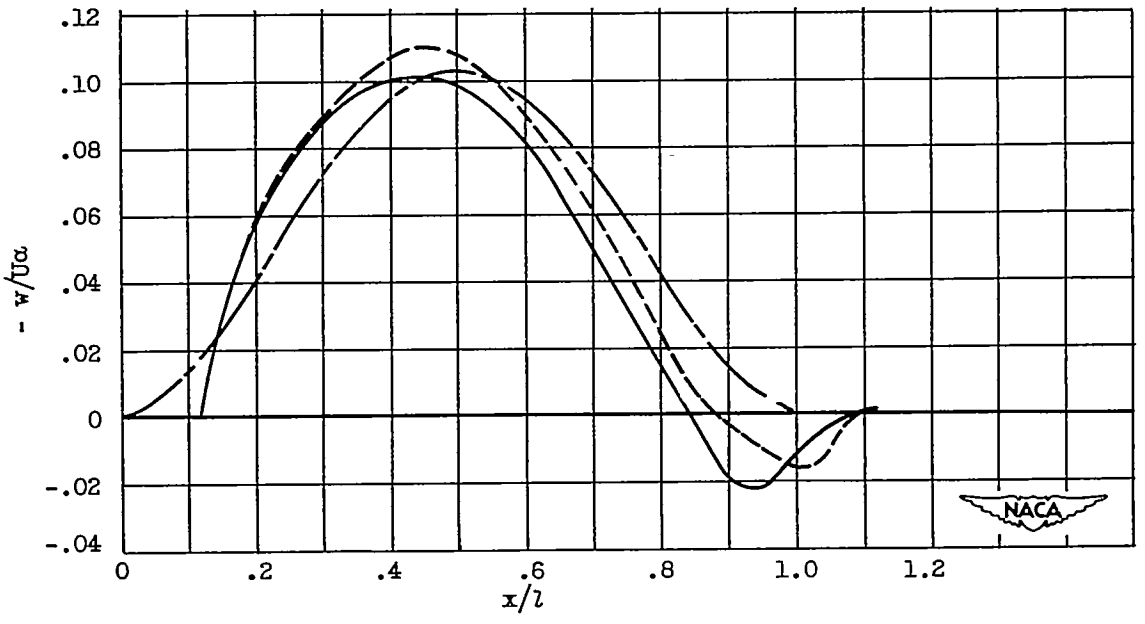

(b) $\beta z_0/l$, 0.125; F/β, 12.5.

Figure 5. - Comparison of three methods of computing upwash in vertical plane generated by a parabolic body at angle of attack.

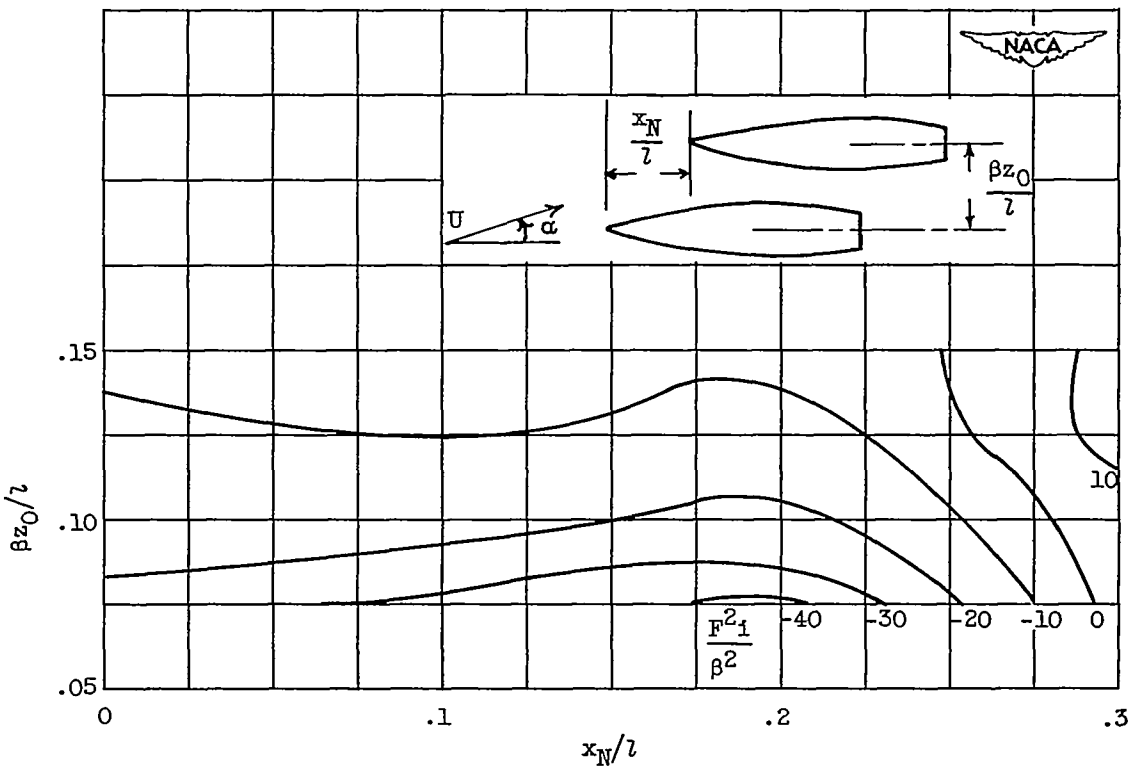

Figure 6. - Contour plot of interference ratio for two-parabolic-body configuration.

$$i = \frac{\left(\frac{dC_L}{d\alpha}\right)_{\text{combination}} - \left(\frac{dC_L}{d\alpha}\right)_{\substack{\text{isolated}\\ \text{components}}}}{\left(\frac{dC_L}{d\alpha}\right)_{\substack{\text{isolated}\\ \text{components}}}}$$

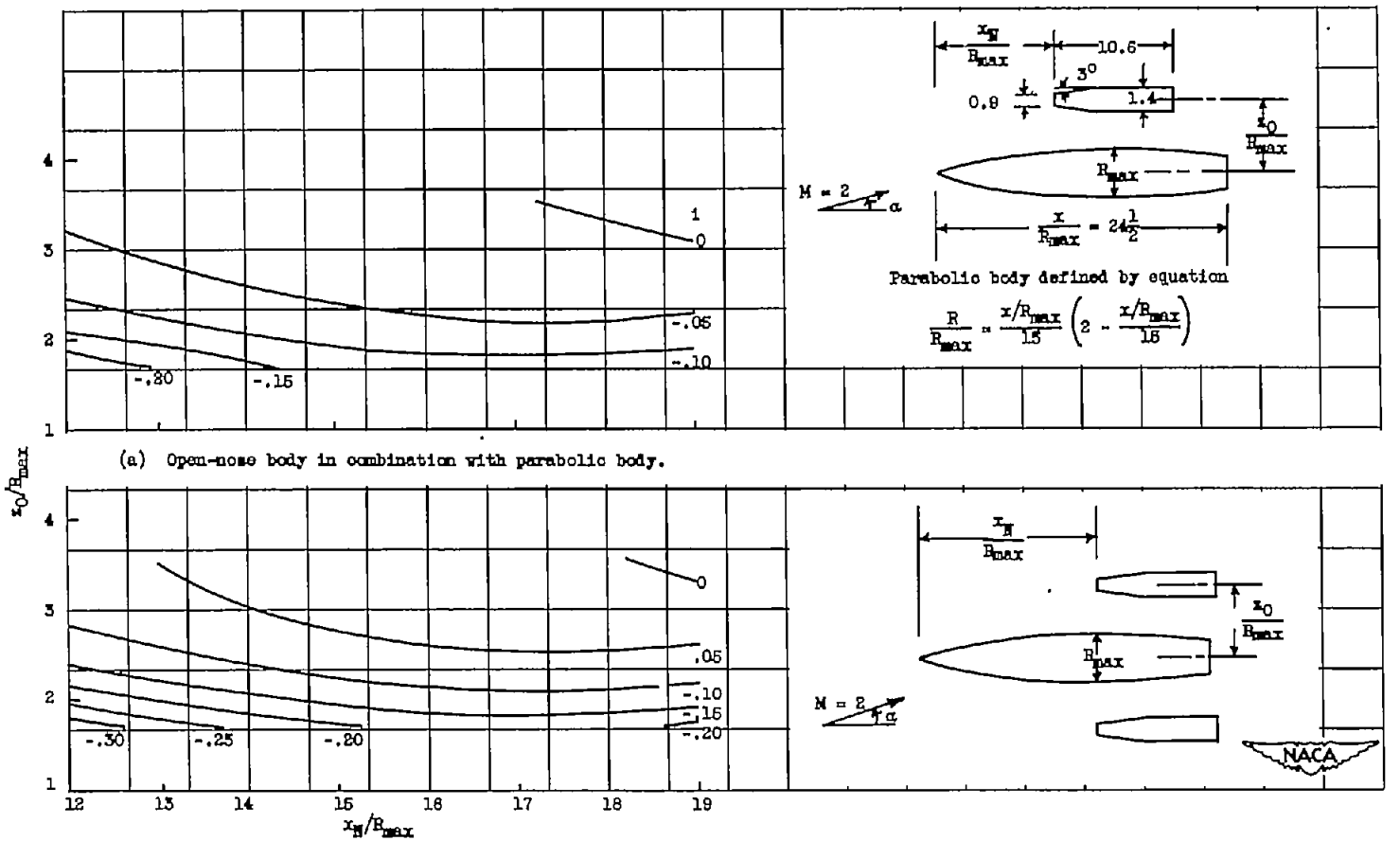

(a) Open-nose body in combination with parabolic body.

(b) Two open-nose bodies in combination with parabolic body.

Figure 7. - Contour plot of interference lift ratio at Mach number 2.

$$i = \frac{\left(\frac{dC_L}{d\alpha}\right)_{\substack{\text{combination}}} - \left(\frac{dC_L}{d\alpha}\right)_{\substack{\text{isolated}\\\text{components}}}}{\left(\frac{dC_L}{d\alpha}\right)_{\substack{\text{isolated}\\\text{components}}}}$$

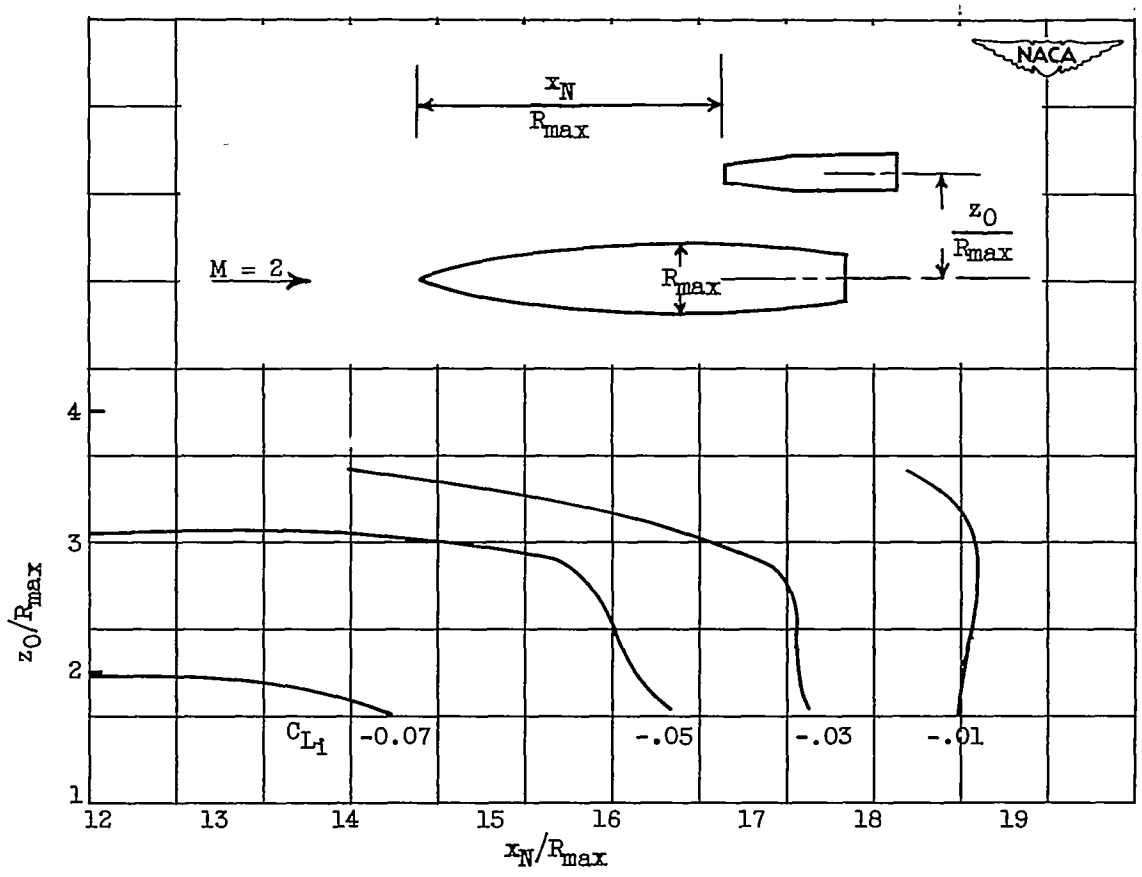

Figure 8. - Contour plot of interference lift coefficient at zero angle of attack for open-nose body mounted above parabolic body.

$$C_{L_i} = (C_L)_{\text{combination}} - (C_L)_{\substack{\text{isolated}\\ \text{components}}}$$

NACA - Langley Field, Va.