9054
NACA TN 2687
TECH LIBRARY KAFB, NM
0065652

NATIONAL ADVISORY COMMITTEE FOR AERONAUTICS

TECHNICAL NOTE 2687

APPLICATION OF TRANSONIC SIMILARITY

By Adolf Busemann

Langley Aeronautical Laboratory
Langley Field, Va.

Washington
April 1952

AFMDC
TECHNICAL LIBRARY
AFL 2811

319.98/41

TECH LIBRARY KAFB, NM
0065652

1F

NATIONAL ADVISORY COMMITTEE FOR AERONAUTICS

TECHNICAL NOTE 2687

APPLICATION OF TRANSONIC SIMILARITY

By Adolf Busemann

SUMMARY

From a review of the different similarity approaches to compressible potential flow, the meaning and limitations of transonic similarity are traced back to their origin. Although the main text deals with the quasi two-dimensional flow, special suggestions for the case of axisymmetrical bodies are added in an appendix.

INTRODUCTION

As long as similarity is used as a sideline of theory, its limitations may not be exceeded except for exploratory purposes. As a tool of experimental research, similarity may more likely vary between too narrow and too broad applications, or it may become fixed to a standard form until its generality is rediscovered from time to time. It is not so much the literature about similarity as the comprehensive guides that seem to be lacking. There is, of course, reason for this deficiency, since similarity, though based on a very simple principle of classical mathematics, penetrates progressively so many different fields in its various applications that the difficulty of saying enough about it is inferior only to the difficulty of adding anything new to it. In spite of this difficulty, this paper intends to summarize important points of the background for transonic similarity in order to stabilize variation of opinion concerning its applications. The discussion is presented in three parts: The first deals with the similarity routine, the second discusses the adequate differential equation, and the third gives the resulting hints for a proper application.

SYMBOLS

A	aspect ratio
$c(x)$ or c	center-line deviation; prime with this symbol indicates differentiation with respect to x

c_o	maximum center-line deviation
C_c	chord-force coefficient
C_D	drag coefficient
C_L	lift coefficient
C_m	pitching-moment coefficient
C_N	normal-force coefficient
C_p	pressure coefficient
C_R	resultant-force coefficient
C_X	longitudinal-force coefficient
M	Mach number
r	distance from axis of revolution
p	local static pressure
p_o	static pressure at stagnation point
p_∞	static pressure of undisturbed stream
R(x) or R	radius; prime with this symbol indicates differentiation with respect to x
R_o	maximum radius
U	velocity
v	specific volume
x,y,z	space coordinates
α	angle of attack
δ	meridian angle
γ	ratio of specific heats
Λ	sweep angle

ρ density

τ thickness ratio

φ disturbance velocity potential divided by undisturbed stream velocity (dimension, length)

SIMILARITY ROUTINE

The similarity routine in physics is called dimensional analysis and is backed by the whole philosophy of conceiving dimensions. The mathematical application of similarity based on any chosen differential equation is more flexible but is, on the other hand, more problematic, since the arbitrary element used in cutting and trying a differential equation does not keep the results within natural limits. The basic idea is always the same: All the given and unknown variables concerned are changed in scale with no other restriction than that of leaving intact the underlying physical phenomena or the selected differential equation. Every free change in scale is equivalent to one degree of freedom of the similarity transformation or one more branch for the similarity families. The number of degrees of freedom is therefore the number of variables in the differential equation less the number of correlations which must be watched in order to leave the laws of physics or the selected differential equation intact. Once it is discovered that every additional term of the differential equation cuts off one branch of the similarity families, a race for the shortest differential equation suitable to express a limited class of interesting phenomena is the natural consequence. Any practical computation has, of course, the same benefits of a shorter equation but has the advantage of allowing tentative negligence of terms to be checked during the calculation itself.

The compressible potential flow in three-dimensional space, if expressed by the disturbance potential of a parallel flow and for a fluid satisfying the perfect-gas laws, has 20 terms in the general differential equation formed out of 6 variables: the Mach number M of the basic flow, the specific-heat ratio γ, the space coordinates x,y,z, and the disturbance potential φ; thus,

$$\varphi_{xx}\left[\left(1 - M^2\right) - (\gamma + 1)M^2\varphi_x - \frac{\gamma + 1}{2} M^2\varphi_x{}^2 - \frac{\gamma - 1}{2} M^2\varphi_y{}^2 - \frac{\gamma - 1}{2} M^2\varphi_z{}^2\right] +$$

$$\varphi_{yy}\left[1 - (\gamma - 1)M^2\varphi_x - \frac{\gamma - 1}{2} M^2\varphi_x{}^2 - \frac{\gamma + 1}{2} M^2\varphi_y{}^2 - \frac{\gamma - 1}{2} M^2\varphi_z{}^2\right] +$$

$$\varphi_{zz}\left[1 - (\gamma - 1)M^2\varphi_x - \frac{\gamma - 1}{2} M^2\varphi_x{}^2 - \frac{\gamma - 1}{2} M^2\varphi_y{}^2 - \frac{\gamma + 1}{2} M^2\varphi_z{}^2\right] -$$

$$2M^2\varphi_{xy}\left(\varphi_y + \varphi_x\varphi_y\right) - 2M^2\varphi_{xz}\left(\varphi_z + \varphi_x\varphi_z\right) - 2M^2\varphi_{yz}\varphi_y\varphi_z = 0 \tag{1}$$

Because the physical dimensions are correct, the differential equation (1) possesses one degree of freedom for all potential flows - the geometrically similar flow (same factor for φ, x, y, and z with unchanged M and γ). Before there is any hope of getting more families of similar flows, the number of terms has to be considerably reduced. The disturbance potential has been introduced in order to reduce the class of applications to small-disturbance flows. If that is done to the extreme, the three first-order terms in φ would be the only ones to consider. An improved accuracy requires inclusion of all five second-order terms together. The jump from three to eight terms goes beyond the power of the similarity for six variables. It is, however, not the concern of the similarity routine to justify any amputated differential equation. In order to show how the routine is carried out, the basic differential equation may be the so-called transonic differential equation containing all first-order terms and a favorite second-order term

$$\varphi_{xx}\left(1 - M^2\right) - (\gamma + 1)M^2\varphi_{xx}\varphi_x + \varphi_{yy} + \varphi_{zz} = 0 \tag{2}$$

Justification is contained in the next section.

The number of participating variables is still six and the number of terms in the transonic differential equation is four, equivalent to three ratios of successive terms. If all the ratios are essentially different, the original six free factors are thus reduced to only three independent factors on account of the three ratios that must remain unchanged. Combinations of the variables, which are independent of the scale changes of the single variables, are called "invariants" of the similarity transformation. A set of necessary invariants can be formed by the ratios of successive terms of the differential equation (2) (taking operations according to scale values) as follows:

$$\left.\begin{aligned}
&\frac{\left(1 - M^2\right)x}{(\gamma + 1)M^2\varphi} = \text{inv.} \\
&\frac{(\gamma + 1)M^2y^2\varphi}{x^3} = \text{inv.} \\
&\frac{y^2}{z^2} = \text{inv.}
\end{aligned}\right\} \tag{3}$$

The indicated form depends upon the arrangement of the terms in the differential equation. The commutative freedom of the terms is, however, no source of new invariants since the same set of invariants can be combined in innumerable ways into equivalent invariants which are constant as long as the first three are kept constant. This freedom of associations is a necessary part of the routine. Actually, it is one of the most valuable properties for general applications, though it is usually reduced by convention if applied to a special class of problems. Such more conventional invariants[1] are the following simple combinations of the original three:

$$\left.\begin{aligned}
&\frac{\left(1 - M^2\right)z^2}{x^2} = \text{inv.} \\
&\frac{\left(1 - M^2\right)^3z^2}{(1 + \gamma)^2M^4\varphi^2} = \text{inv.} \\
&\frac{y\sqrt{1 - M^2}}{x} = \text{inv.}
\end{aligned}\right\} \tag{4}$$

After the freedom of the similarity transformation, based on the differential equation, is found to be satisfactory, the next step is to express the variables of the differential equation by the given and unknown quantities on the boundaries. It may happen that the boundary conditions of the original solution transform under the remaining

---

[1]Because the proper range of the transonic term is close to $M = 1$ only, M in any power as a factor may be dropped and $1 - M^2$ may equal $2(1 - M)$ without any discussion.

freedom in a manner that the resulting new solutions become impractical in part or altogether. The compressible flow in three dimensions is an example. The zero flow velocity normal to the body surface is not automatically conserved, and only for quasi two-dimensional bodies or for bodies of revolution with angle of attack is it simple to find always a new body surface in the neighborhood of the old one without sacrificing one degree of freedom. (See appendix A.) In the quasi two-dimensional case the body has the coordinates x, y, Z with $Z(x,y)$ defined by the surface requirement

$$\frac{\partial Z(x,y)}{\partial x} = \varphi_z \tag{5}$$

or

$$\frac{Z}{x} \sim \frac{\varphi}{z} \sim \tau \sim \alpha \tag{6}$$

The coordinate for small thicknesses Z enters the thickness ratio τ for the similar body and, in like manner, the angle of attack α; whereas the aspect ratio A or the sweep angle Λ connects the actual space dimensions y and x. (An elevated control surface, however, changes with Z in thickness and angle of attack but with z in the position above the main wing.) If the Mach number M of the basic parallel flow and the specific-heat ratio γ of the gas are included, the given quantities enter the "given invariants" as follows:

$$\left.\begin{aligned} &\frac{(1 - M^2)^3}{(\gamma + 1)^2 M^4 \tau^2} \\ &A(1 - M^2)^{1/2} \end{aligned}\right\} \tag{7}$$

or in any desired combinations, as

$$A(\gamma + 1)^{1/3} M^{2/3} \tau^{1/3} \tag{8}$$

The unknown quantities create less trouble with respect to their number than the given quantities, since they have to be taken one at a time. In flow problems with given body shapes and angles, the unknown quantities are almost exclusively pressures or pressure coefficients

$$C_p = \frac{p - p_\infty}{\frac{1}{2}\rho U^2} \sim \varphi_x \tag{9}$$

and integrals of them. The most important ones belong to three classes of different powers in the thickness ratio:

1st class:

$$C_L \sim C_N \sim C_R \sim C_m \sim C_p \sim \frac{\varphi}{x} \tag{10}$$

2d class:

$$C_D \sim C_c \sim C_X \sim C_p\tau \sim \frac{\varphi^2}{xz} \tag{11}$$

3d class:

$$\frac{dC_L}{d\alpha} \sim \frac{d^2C_D}{d\alpha^2} \sim \frac{C_p}{\tau} \sim \frac{z}{x} \tag{12}$$

Their invariants can be expressed as follows for a first-class representative:

$$\frac{C_1(\gamma + 1)M^2}{1 - M^2} \quad \text{or} \quad \frac{C_1(1 - M^2)^{1/2}}{\tau} \quad \text{or} \quad \frac{C_1{}^3(\gamma + 1)M^2}{\tau^2} \quad \text{and so forth} \tag{13}$$

and, correspondingly, for the representatives of the other classes:

$$\left.\begin{aligned} \frac{C_2}{C_1\tau} &= \text{inv.} \\ \frac{C_3\tau}{C_1} &= \text{inv.} \end{aligned}\right\} \tag{14}$$

The result of the similarity is simply that, if the problem has a unique solution, the unknown invariant stays the same as long as all the given invariants are kept the same. All members of one similarity family have identical values of corresponding invariants, given and unknown ones, including all possible combinations of them.

There is a simpler way of expressing this same idea, which is the representation by symbolic functions, where the known and unknown invariants enter as parameters. The unknown invariant is generally split into the actual unknown quantity on the left-hand side and the other factors on the right-hand side in front of the symbolic function; that is,

$$C_p = \frac{\tau}{\sqrt{1 - M^2}} f\left[\frac{\left(1 - M^2\right)^3}{(\gamma + 1)^2 M^4 \tau^2}, A\sqrt{1 - M^2}\right] \qquad (M \neq 0;\ M \neq 1) \quad (15)$$

or

$$C_p = \frac{\tau^{2/3}}{(\gamma + 1)^{1/3} M^{2/3}} g\left[\frac{\left(1 - M^2\right)^3}{(\gamma + 1)^2 M^4 \tau^2}, A(\gamma + 1)^{1/3} M^{2/3} \tau^{1/3}\right] \qquad (M \rightarrow 1) \quad (16)$$

or

$$C_p = \frac{\tau}{\sqrt{1 - M^2}} h\left[\frac{(\gamma + 1) M^2 \tau}{\left(1 - M^2\right)^{3/2}}, A\sqrt{1 - M^2}\right] \qquad (M \rightarrow 0 \text{ or } \gamma \rightarrow -1) \quad (17)$$

In this form there is the same freedom of association in the presented parameters. The first form, for instance, is convenient for subsonic flow; the second form is shaped for convenience at Mach number 1; and the third form is convenient for the case $\gamma = -1$.

Some special cases may illustrate the meaning of those changes. The incompressible result can be easily obtained from equation (17) by letting M equal zero:

$$C_p = \tau\ h(0,A) = \tau\ H(A) \qquad (18)$$

If the transonic term is considered to be unimportant, a choice of γ equal to -1 is going to cancel it. But before the elimination is successful all former associations have to be reversed until only one invariant contains $(\gamma + 1)$; thus, equation (17) is again preferable to equation (16):

$$C_p = \frac{\tau}{\sqrt{1 - M^2}} H\left(A\sqrt{1 - M^2}\right)$$

$$= \tau A H_1\left(A\sqrt{1 - M^2}\right) \tag{19}$$

After the transonic term is canceled, some cases survive an additional cancellation of the term containing $(1 - M^2)$, if this factor is attached only to one invariant, thus

$$C_p = \tau A \times \text{Constant}$$

$$= \alpha \cot \Lambda \times \text{Constant} \tag{20}$$

It results that some finite aspect ratio or sweep angle or finite wind-tunnel diameter and a finite thickness ratio or angle of attack are necessary to express the unknown quantities with the given quantities. If only the transonic term is canceled, Prandtl's idea of keeping the boundary-layer development similar to an incompressible case gets the necessary freedom at subsonic speeds. By requiring C_p to be invariant for boundary-layer similarity, the symbolic functions show that the thickness ratio τ must be proportional to $\sqrt{1 - M^2}$ in similar cases:

$$C_p = \text{inv.} \tag{21}$$

if

$$\frac{\tau}{\sqrt{1 - M^2}} = \text{inv.}$$

and

$$A\sqrt{1 - M^2} = \text{inv.}$$

Following this rule allows predictions to be made about the separation tendencies since both potential flow and boundary layer are kept similar.

ADEQUATE DIFFERENTIAL EQUATION

For the application of the similarity rules to experiments the selection of the underlying differential equation has to be sound. The preference of the lower orders of φ is based on the small-disturbance theory, though some doubts about practical thickness ratios and stagnation regions are expressed from time to time. The selection of a convenient second-order term in preference to its four competitors of the same level requires much more justification. The background is the following: The first-order terms guarantee an existing solution of regular type as long as they are used at subsonic speeds. At sonic velocity the first term disappears and the two remaining terms resemble an incompressible flow in two dimensions

$$\varphi_{yy} + \varphi_{zz} = 0 \tag{22}$$

This result is very simple and correct, since the streamtubes at sonic speed have only a second-order change of cross section with respect to pressure changes. (For analytical solution, see appendix B.) The main problem is to fit the streamtubes around obstacles regardless of the pressure (fig. 1). The incompressible medium is represented by the cross sections of the streamtubes. If any trouble is encountered by trying to fit these streamtubes around given bodies while measuring the cross section perpendicular to the x-axis, a thoughtful pipefitter may try, on second thought, to measure the true cross section perpendicular to the tube axis. This alternative problem is identical with the complete 15-term sonic differential equation of a gas with a straight compression law expressed in coordinates of pressure against volume, called the gas with $\gamma = -1$ among the perfect gases (fig. 2). The actual difference between both streamtube-fitting problems is visible but it does not have the significant result of saving flow problems from degeneration. Figures 3(a) and 3(b) show the two-dimensional flow in the linearized and the complete $\gamma = -1$ cases; figures 4(a) and 4(b) compare the second case to the corresponding axisymmetrical flow, the potential lines being straight in figure 4(a) and changed to catenaries in figure 4(b). In all cases the flow has to be terminated by a jet boundary before the pressure differences grow to infinity, though the axisymmetrical flow permits much larger jets at equal thickness ratios than the two-dimensional body. In three-dimensional problems of plan forms at angles of attack, pressure differences are not quite so often degenerating and determine finite total lifts or even finite lift distributions.

The degeneration for all bodies of finite length with finite thicknesses at sonic speeds indicates clearly that the general problem is

beyond the realm of the two remaining first-order terms. In order to keep the solutions from degenerating, the five second-order terms are the next ones to take. Four of the second-order terms combined with nine third-order terms were included in the sonic solutions for the gas with $\gamma = -1$ and did not save them from degeneration. The only second-order term having the crucial factor $\gamma + 1$ indicating the curvature of the compression law is, therefore, the most probable one to bring about changes. Nevertheless, its preference requires some better justification than probability to succeed. Since the only task of the additional term is to avoid a known type of degeneration of the linearized equation, the structure of the flow field under consideration is very special. Strong gradients occur in the x-direction and comparatively smaller ones in the two other directions, y and z. The quintuplet of second-order terms

$$\left.\begin{aligned} &-(\gamma + 1)M^2\varphi_{xx}\varphi_x \\ &-(\gamma - 1)M^2\varphi_{yy}\varphi_x \\ &-(\gamma - 1)M^2\varphi_{zz}\varphi_x \\ &-2M^2\varphi_{xy}\varphi_y \\ &-2M^2\varphi_{xz}\varphi_z \end{aligned}\right\} \tag{23}$$

can therefore be distinguished by factors above any finite limit, so that the one with all three differentiations in the x-direction is far superior to all the others, which have only one differentiation in x-direction and the remaining two in other directions. It can be shown that in a properly limited thickness range the predominance of the first term within the whole quintuplet of second-order terms can be made larger than any desired factor. In this situation the so-called transonic differential equation is the product of theoretical reasoning alone.

APPLICATION

By a combination of the information given about the similarity routine and the justification of the underlying differential equation, it follows that the transonic term should only be used when the problem forces use of this step. This result means that one has to learn at

first all those questions which can be answered without the second-order term. If the transonic term is necessary, the thickness or the angle of attack enters the results with peculiar fractional powers. Transonic similarity only correlates as one family those conditions that are connected by the almost vertical structural lines indicated, for convenience, between 4- and 6-percent thickness in figure 5. Similarity is concerned only with potential flow of given contours composed by the solid body including perhaps a certain type of separation. Changes in separation make the similarity inapplicable, but there may be two favorable classes: one with negligible separation and a second where the transonic pressure discontinuities locate the boundary-layer separation inalterably. A connection between separation points and discontinuities has a known analogy at sharp corners in incompressible flow. The transonic term cancels the second degree of freedom which enabled Prandtl to keep the potential flow and the boundary-layer development similar at the same time in the subsonic and incompressible regions.

CONCLUDING REMARKS

All transonic problems can be basically understood by the addition of just one second-order term in cases where the linearized approach fails. The idea of the additional term is not to improve the accuracy of existing linearized results but to keep the linearized results from degenerating. Adding this term as the last resort in the similarity approach shrinks the freedom to thickness families with different boundary-layer development. An experimental check is not easily possible, since below about 4-percent thickness the experimental equipment has to be beyond the customary accuracy and above about 6-percent thickness the transonic term is not sufficient. The original 5/3 power of the drag coefficient with thickness has to be changed sooner or later to a first-power law because of the limited positive and negative pressures at sonic speed. There is, however, a very good theoretical reason for taking transonic similarity as granted within the proper limits and as a means of extrapolation with caution toward larger thicknesses. As soon as the linearized theory is able to work reasonably, the transonic approach would be unwise and unjustified. At that time the possibility of including the boundary-layer development in the similarity routine is present; the peculiar powers of the thickness or angle of attack disappear; and the emphasis can be placed on the proper variables.

Langley Aeronautical Laboratory
National Advisory Committee for Aeronautics
Langley Field, Va., February 12, 1952

APPENDIX A

BOUNDARY CONDITIONS

When the differential equation deals with potentials but the boundary conditions are streamlines, it cannot always be expected that similar potential fields fit to similar boundary conditions. For instance the two-dimensional flow may stretch the potential field with Mach number but shrink the body thickness perpendicular to the main flow direction. The observable pressures in such cases on the surface of the bodies shift relative to the potential field, but the pressure changes at small disturbance bodies due to these small shifts are negligible in two-dimensional cases, and the pressures may be called the pressures at the middle plane of the thin wing. In three-dimensional flow such an approximation is not generally permissible as may be demonstrated for the slender body with circular sections.

If a body is given by the radii of its circular sections $R(x)$ and a center line $c(x) = z$, the potential distribution in its neighborhood may be arranged according to the linearized or parabolic differential equation at sonic speeds of appendix B. This potential requires just one more term than the proper axisymmetrical solution (equation (B4)) because of the yawed or curved center line $c(x)$ and is written

$$\varphi(x,y,z) = F_0(x) + RR' \log\sqrt{y^2 + (z - c)^2} - c'R^2 \frac{z - c}{y^2 + (z - c)^2} \tag{A1}$$

Gradients in the y- and z- directions are

$$\varphi_y = RR' \frac{y}{y^2 + (z - c)^2} + c'R^2 \frac{2y(z - c)}{\left[y^2 + (z - c)^2\right]^2} \tag{A2}$$

$$\varphi_z = RR' \frac{z - c}{y^2 + (z - c)^2} + c'R^2 \frac{(z - c)^2 - y^2}{\left[y^2 + (z - c)^2\right]^2} \tag{A3}$$

These gradients add to the radial velocity with the following factors:

$$\varphi_r = \varphi_y \frac{y}{\sqrt{y^2 + (z - c)^2}} + \varphi_z \frac{z - c}{\sqrt{y^2 + (z - c)^2}}$$

$$= \frac{RR'}{\sqrt{y^2 + (z - c)^2}} + \frac{c'R^2(z - c)}{\left[y^2 + (z - c)^2\right]^{3/2}} \tag{A4}$$

This expression shows that the second and third terms of equation (A1) take care of the growth in cross section R' and the slope of the center line c' as required for a solid body contour. The first term does not enter the boundary conditions nor does the arbitrary constant of the logarithm. Both these free elements are connected, since $F_0(x)$ can be combined with any product $RR' \times$ Constant. The y and $z - c$ values in the logarithm may, therefore, be considered as expressed in the proper scale for the chosen similarity. If that is done, the ratios of the three terms should be invariant for corresponding points. It is easy to see that the center-line deviation c has to follow y and z in their scales and that the first term in equation (A1) represents one of the symbolic functions (equations (15) to (17)), if written as follows:

$$F_0(x) = \frac{R_0^2}{x_0} f_0\left(\frac{x}{x_0}, \text{ invariants}\right) \text{ or } \frac{R_0^2}{x_0} g_0\left(\frac{x}{x_0}, \text{ invariants}\right) \tag{A5}$$

R_0 and x_0 being the maximum radius and length of the circular body, respectively. The new function f_0 with only one geometrical variable near the axis stays the same as long as the similarity is conserved. It enters the pressure distribution at the body surface, but it cannot create lift. The invariant form of the second term depends on the chosen differential equation for the complete flow. If the linearized flow outside the transonic range is preferred, the potential reads

$$\varphi(x,y,z) = \frac{R_o^2}{x_o} f_0\left(\frac{x}{x_o}\right) + RR' \log\sqrt{\frac{\left[y^2 + (z - c)^2\right](1 - M^2)}{x_o^2}} -$$

$$c'R^2 \frac{z - c}{y^2 + (z - c)^2} \tag{A6}$$

In the transonic range it is more appropriate to use

$$\varphi(x,y,z) = \frac{R_o^2}{x_o} g_0\left(\frac{x}{x_o}\right) + RR' \log\sqrt{\frac{\left[y^2 + (z - c)^2\right] R_o^2 M^2(\gamma + 1)}{x_o^4}} -$$

$$c'R^2 \frac{z - c}{y^2 + (z - c)^2} \tag{A7}$$

Another slight difficulty for circular bodies is caused by the difference in magnitude of the three components of the potential gradient near the body. The axial gradient is so small that the squares of the crosswise gradients contribute noticeably to the first order of the pressure changes (in the same manner as the time and space derivatives enter the incompressible nonsteady Bernoulli equation):

$$C_p = -2\varphi_x - \varphi_y^2 - \varphi_z^2 \tag{A8}$$

On the body surface the simplification may be used

$$\left.\begin{aligned} y &= R \sin \delta \\ z - c &= R \cos \delta \end{aligned}\right\} \tag{A9}$$

With these notations the pressure coefficient outside the transonic range can be expressed by the symbolic function f and some extra terms:

$$C_p = \frac{R_o^2}{x_o} f\left[\frac{x}{x_o}, \frac{c_o^2(1 - M^2)}{x_o^2}\right] -$$

$$2\left(RR'' + R'^2\right) \log \frac{R\sqrt{1 - M^2}}{x_o} - R'^2 - c'^2 +$$

$$(2Rc'' + 4R'c')\cos \delta + 2c'^2\cos 2\delta \tag{A10}$$

In the transonic range the corresponding function g is connected with slightly adjusted extra terms:

$$C_p = \frac{R_o^2}{x_o^2} g\left[\frac{x}{x_o}, \frac{x_o^2(1 - M^2)}{R_o^2M^2(\gamma + 1)}, \frac{c_o^2R_o^2M^2(\gamma + 1)}{x_o^4}\right] -$$

$$2(RR'' + R'^2) \log \frac{RR_oM\sqrt{\gamma + 1}}{x_o^2} - R'^2 - c'^2 +$$

$$(2Rc'' + 4R'c')\cos \delta + 2c'^2\cos 2\delta \tag{A11}$$

It is obvious that the extra terms can only be used as long as the second derivatives of R and c are limited wherever R is not zero. Equations (A10) and (A11), therefore, give proper information only if R is zero on both ends of a body of finite length or the supersonic character of the flow cancels upstream effects. If, however, a streamlined body, having limited second-order derivatives throughout, is chosen, the extra terms create neither lift nor drag but moment:

$$L = q \iint C_p \, dx \, dy = - 2\pi q \left[c'R^2\right]_0^{x_o} \tag{A12}$$

$$D = q \iint C_p \, dy \, dx = q \iint \frac{R_o^2}{x_o^2} g \, dy \, dz + \pi\left[2R^2R'^2 \log \frac{\text{Const}}{R} + R^2c'^2\right]_0^{x_o} \tag{A13}$$

$$M_p = -q\iint C_p x \, dx \, dy = 2\pi q \int_0^{x_o} x \, d\left(c'R^2\right) \tag{A14}$$

Since the first term creates no lift either, the lift and extra drag are features of unstreamlined bodies with blunt bases or other discontinuities. The term of the symbolic functions containing the maximum center deviation c_o may be of negligible effect and therefore omitted.

APPENDIX B

SOLUTIONS OF THE PARABOLIC EQUATION

The sonic differential equation in x,y,z

$$\varphi_{yy} + \varphi_{zz} = 0 \tag{B1}$$

is of the parabolic type; there is no direct relation to changes in the main flow direction x. For a real variable x and a complex variable $y + iz$ and its conjugate $y - iz$, the general solution may be written

$$\begin{aligned}\varphi(x,y,z) &= f_1(x,\ y + iz) + f_2(x,\ y - iz) \\ &= \text{R.P.}\left[f(x,\ y + iz)\right]\end{aligned} \tag{B2}$$

The notation R.P. (...) is used to identify the real part of a complex number. If this general solution is specialized to two-dimensional flow in x and y, only two powers of the complex number $y + iz$ are functions not containing z in the real part; they are $(y + iz)^0$ and $(y + iz)^1$. This result leads to the two-dimensional solution:

$$\begin{aligned}\varphi(x,y) &= \text{R.P.}\left[f_0(x)\ (y + iz)^0 + f_1(x)\ (y + iz)^1\right] \\ &= f_0(x) + f_1(x)\ y\end{aligned} \tag{B3}$$

If an axisymmetrical flow is wanted, there are again two functions whose real parts have the proper combination $y^2 + z^2 = r^2$. They are $(y + iz)^0$ and $\log(y + iz)$. The corresponding solution is

$$\begin{aligned}\varphi(x,r) &= \text{R.P.}\left[F_0(x)\ (y + iz)^0 + F_1(x)\ \log(y + iz)\right] \\ &= F_0(x) + F_1(x)\ \log r\end{aligned} \tag{B4}$$

It is obvious that neither of these solutions stays finite between the body at small values of y or r and infinity. They are useful if applied to a thin or slender body (for the geometry of the streamlines) in a finite jet with boundaries at y_j or r_j (for the pressure distribution) as demonstrated in figures 3 and 4.

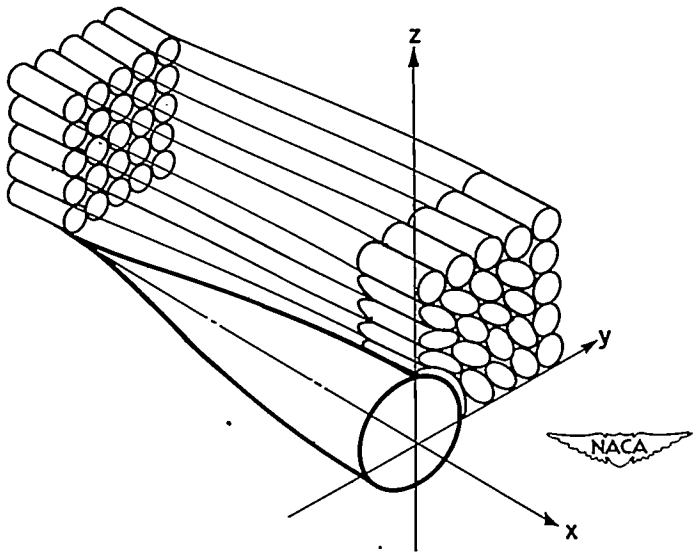

Figure 1.- Sonic streamtubes.

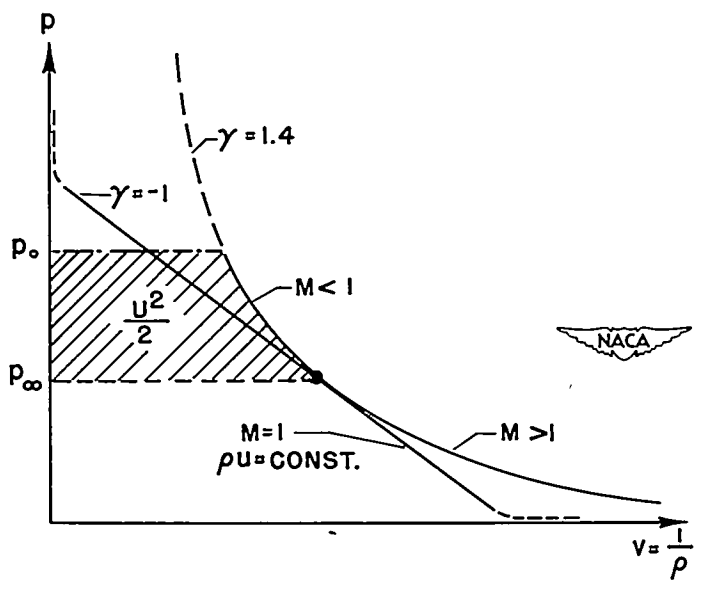

Figure 2.- Compression law.

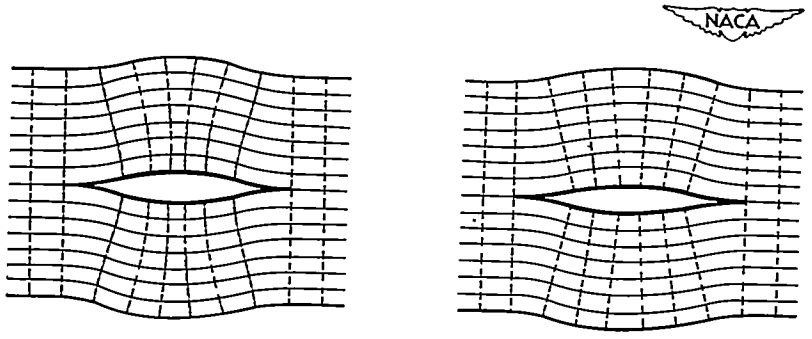

(a) Linearized. (b) For $\gamma = -1$.

Figure 3.- Two-dimensional sonic flow.

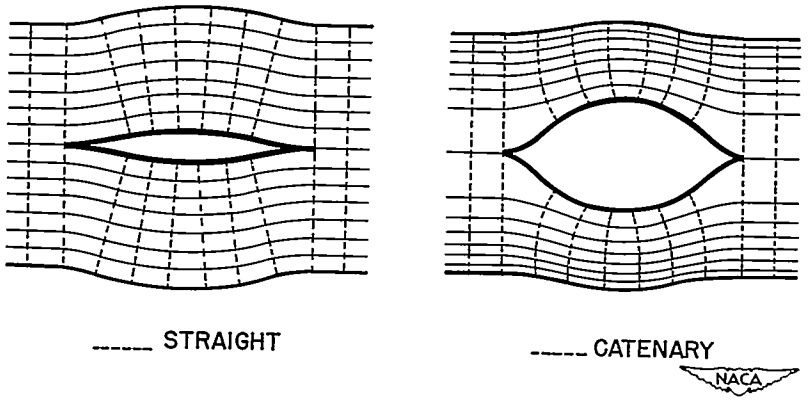

(a) Two-dimensional. (b) Axisymmetrical.

Figure 4.- Sonic flow.

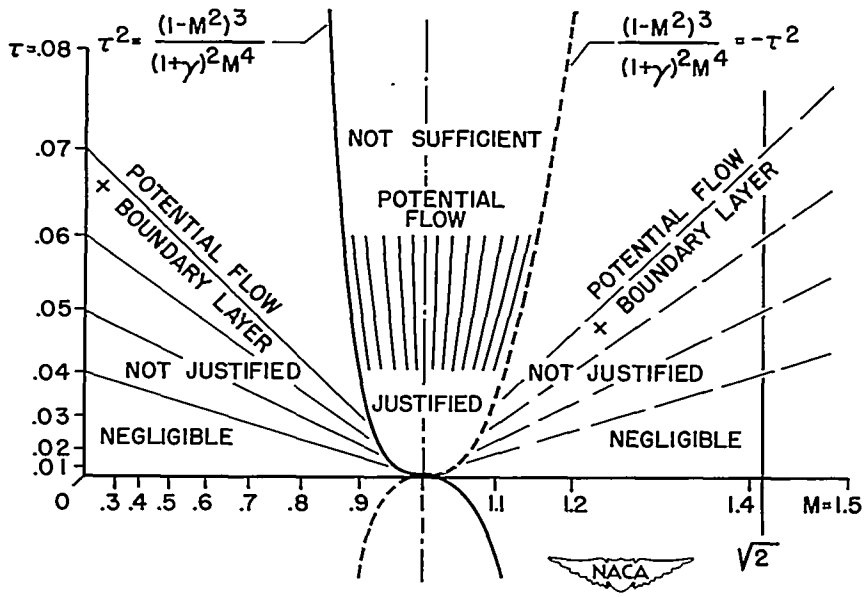

Figure 5.- The transonic term.

NACA-Langley - 4-3-52 - 1000