NACA TN 2705
9071

TECH LIBRARY KAFB, NM
0065747

NATIONAL ADVISORY COMMITTEE FOR AERONAUTICS

TECHNICAL NOTE 2705

THEORY OF SUPERSONIC POTENTIAL FLOW IN TURBOMACHINES

By Robert H. Wasserman

Lewis Flight Propulsion Laboratory
Cleveland, Ohio

Washington
June 1952

3735

AFMDC
TECHNICAL LIBRARY
AFL 2811

TECH LIBRARY KAFB, NM

0065747

1J

NATIONAL ADVISORY COMMITTEE FOR AERONAUTICS

TECHNICAL NOTE 2705

THEORY OF SUPERSONIC POTENTIAL FLOW IN TURBOMACHINES

By Robert H. Wasserman

SUMMARY

A general method for solving supersonic potential flow problems for stationary or rotating coordinate systems is presented. The principal attributes of the method are: It can handle flows which cannot be treated as two-dimensional, and a sound theoretical basis gives assurance of its validity for a class of boundary-value problems. An application to the design of a compressor rotor is made.

INTRODUCTION

The fluid flow through a turbomachine is intrinsically three-dimensional. This fact must be considered for a full understanding of such flow, and in particular for adequate treatment of such problems as off-design performance surging and secondary flows due, for example, to boundary layers. However, this three-dimensionality is not easily accounted for theoretically, even in the idealized case of no viscosity or heat transfer. In existing approaches, some sort of two-dimensional flow is first considered, such as flow through a cascade (Tyler, reference 1), axially symmetrical flow (Marble, reference 2; Goldstein, reference 3), flow in surfaces of revolution (Wu and Brown, references 4 and 5), or flow over other special surfaces (Stanitz, reference 6). In some cases, this flow serves as a first approximation and is modified to give normal variations by Taylor series expansions (Reissner, reference 7), by use of Ackeret's two-dimensional vortex-and-source method (Meyer, reference 8) or by successive applications of two or more different types of two-dimensional flow (Wu, reference 9).

The solution of the two-dimensional problems and the extensions to three-dimensional flow both generally involve one or more of the following numerical techniques: use of formal series; repeated substitution of "approximate solutions" into the differential equations; and replacement of differential equations by difference equations and subsequent application of relaxation or matrix methods. There is no assurance that numerical results obtained by such means correspond to a solution of the original three-dimensional problem.

The present treatment is a direct attack on the supersonic three-dimensional problem; it dispenses with special two-dimensional flows. Moreover, the mathematical basis of the present treatment due to E. W. Titt (reference 10) contains a guarantee that the numerical procedure involved shall converge "locally" to the correct answer.

The fluid flow through a single component of a turbomachine is treated herein - either a rotating or a stationary component. Moreover, consideration is limited to regions in a component in which the fluid flow may be considered inviscid, isentropic, and irrotational. Such regions, however, are permitted to be bounded by surfaces on which these assumptions are not valid - such as shock surfaces. In such a region, the flow is described mathematically by

$$\left[\left(\frac{\partial\Phi}{\partial z}\right)^2 - a^2\right]\frac{\partial^2\Phi}{\partial z^2} + \frac{2}{r}\left(\frac{1}{r}\frac{\partial\Phi}{\partial\varphi} - \omega r\right)\frac{\partial\Phi}{\partial z}\frac{\partial^2\Phi}{\partial\varphi\,\partial z} + 2\frac{\partial\Phi}{\partial r}\frac{\partial\Phi}{\partial z}\frac{\partial^2\Phi}{\partial r\,\partial z} +$$

$$\frac{1}{r^2}\left[\left(\frac{1}{r}\frac{\partial\Phi}{\partial\varphi} - \omega r\right)^2 - a^2\right]\frac{\partial^2\Phi}{\partial\varphi^2} + \frac{2}{r}\left(\frac{1}{r}\frac{\partial\Phi}{\partial\varphi} - \omega r\right)\frac{\partial\Phi}{\partial r}\frac{\partial^2\Phi}{\partial r\,\partial\varphi} +$$

$$\left[\left(\frac{\partial\Phi}{\partial r}\right)^2 - a^2\right]\frac{\partial^2\Phi}{\partial r^2} - \frac{1}{r}\left[\left(\frac{1}{r}\frac{\partial\Phi}{\partial\varphi}\right)^2 + a^2\right]\frac{\partial\Phi}{\partial r} = 0 \tag{1}$$

when the flow space is provided with cylindrical coordinates z,φ,r which rotate with the angular velocity ω of the wheel. Note that the sound speed a is a function of I, ω, r, $\frac{\partial\Phi}{\partial r}$, $\frac{\partial\Phi}{\partial\varphi}$, and $\frac{\partial\Phi}{\partial z}$. A solution of this equation, and thus of a flow problem, is obtained in the region when suitable physical conditions are given on the boundary of the region. A description of a method of solving equation (1) with suitable boundary or initial condition will be presented first from a general point of view. Then an application of the method to a specific flow problem will be made. The work described herein was done at the NACA Lewis laboratory.

GENERAL THEORY

For the present purposes, equation (1) is characterized by the statement that it is a single quasi-linear partial differential equation of the second order for a single function of three independent variables; that is, it is an equation of the form

$$a^{11}\frac{\partial^2\Phi}{\partial z^2} + 2a^{12}\frac{\partial^2\Phi}{\partial z\,\partial\varphi} + 2a^{13}\frac{\partial^2\Phi}{\partial z\,\partial r} + a^{22}\frac{\partial^2\Phi}{\partial\varphi^2} + 2a^{23}\frac{\partial^2\Phi}{\partial\varphi\,\partial r} + a^{33}\frac{\partial^2\Phi}{\partial r^2} + b = 0 \tag{2}$$

where a^{ij} and b are functions of z, φ, r, Φ, $\frac{\partial\Phi}{\partial z}$, $\frac{\partial\Phi}{\partial\varphi}$, and $\frac{\partial\Phi}{\partial r}$. (All symbols are defined in the appendix.) The method to be described for solving equation (2) is a so-called characteristic method. The central idea of such a method is to solve a differential equation by replacing it by an equivalent system of differential equations, each equation containing derivatives with respect to fewer independent variables. This is done by utilizing characteristic manifolds. The problem is thus reduced to solving the equivalent system called the system of characteristic equations (Courant and Hilbert, reference 11). In reference 10, a system of characteristic equations for equation (2) is obtained by means of characteristic surfaces, and a constructive existence theorem for the characteristic equations is presented.

Characteristic Surfaces

On any surface

$$\left.\begin{aligned} z &= z(s,w) \\ \varphi &= \varphi(s,w) \\ r &= r(s,w) \end{aligned}\right\} \tag{3}$$

the following six second-order strip conditions are required:

$$\frac{\partial}{\partial w}\frac{\partial\Phi}{\partial z} = \frac{\partial^2\Phi}{\partial z^2}\frac{\partial z}{\partial w} + \frac{\partial^2\Phi}{\partial z\,\partial\varphi}\frac{\partial\varphi}{\partial w} + \frac{\partial^2\Phi}{\partial z\,\partial r}\frac{\partial r}{\partial w} \tag{4}$$

$$\frac{\partial}{\partial w}\frac{\partial \Phi}{\partial \varphi} = \frac{\partial^2 \Phi}{\partial \varphi\, \partial z}\frac{\partial z}{\partial w} + \frac{\partial^2 \Phi}{\partial \varphi^2}\frac{\partial \varphi}{\partial w} + \frac{\partial^2 \Phi}{\partial \varphi\, \partial r}\frac{\partial r}{\partial w} \tag{5}$$

$$\frac{\partial}{\partial w}\frac{\partial \Phi}{\partial r} = \frac{\partial^2 \Phi}{\partial r\, \partial z}\frac{\partial z}{\partial w} + \frac{\partial^2 \Phi}{\partial r\, \partial \varphi}\frac{\partial \varphi}{\partial w} + \frac{\partial^2 \Phi}{\partial r^2}\frac{\partial r}{\partial w} \tag{6}$$

$$\frac{\partial}{\partial s}\frac{\partial \Phi}{\partial z} = \frac{\partial^2 \Phi}{\partial z^2}\frac{\partial z}{\partial s} + \frac{\partial^2 \Phi}{\partial z\, \partial \varphi}\frac{\partial \varphi}{\partial s} + \frac{\partial^2 \Phi}{\partial z\, \partial r}\frac{\partial r}{\partial s} \tag{7}$$

$$\frac{\partial}{\partial s}\frac{\partial \Phi}{\partial \varphi} = \frac{\partial^2 \Phi}{\partial \varphi\, \partial z}\frac{\partial z}{\partial s} + \frac{\partial^2 \Phi}{\partial \varphi^2}\frac{\partial \varphi}{\partial s} + \frac{\partial^2 \Phi}{\partial \varphi\, \partial r}\frac{\partial r}{\partial s} \tag{8}$$

$$\frac{\partial}{\partial s}\frac{\partial \Phi}{\partial r} = \frac{\partial^2 \Phi}{\partial r\, \partial z}\frac{\partial z}{\partial s} + \frac{\partial^2 \Phi}{\partial r\, \partial \varphi}\frac{\partial \varphi}{\partial s} + \frac{\partial^2 \Phi}{\partial r^2}\frac{\partial r}{\partial s} \tag{9}$$

Since the determinant of the coefficients of the partial derivatives of Φ of the right-hand side is zero, this is a singular system. If the determinant of the coefficients of equation (2) and the coefficients of the five linearly independent expressions on the right-hand sides of equations (4) through (8) is zero, that is:

$$\begin{vmatrix} a^{11} & 2a^{12} & 2a^{13} & a^{22} & 2a^{23} & a^{33} \\ \frac{\partial z}{\partial w} & \frac{\partial \varphi}{\partial w} & \frac{\partial r}{\partial w} & 0 & 0 & 0 \\ 0 & \frac{\partial z}{\partial w} & 0 & \frac{\partial \varphi}{\partial w} & \frac{\partial r}{\partial w} & 0 \\ 0 & 0 & \frac{\partial z}{\partial w} & 0 & \frac{\partial \varphi}{\partial w} & \frac{\partial r}{\partial w} \\ \frac{\partial z}{\partial s} & \frac{\partial \varphi}{\partial s} & \frac{\partial r}{\partial s} & 0 & 0 & 0 \\ 0 & \frac{\partial z}{\partial s} & 0 & \frac{\partial \varphi}{\partial s} & \frac{\partial r}{\partial s} & 0 \end{vmatrix} = 0 \tag{10}$$

then the surface given by equation (3) is called a characteristic surface. Clearly, whether a surface is characteristic depends on the solution $\Phi(z,\varphi,r)$. The left-hand side of equation (10) can be expanded by Laplace's expansion by minors of the last two rows to give

2400

$$A_{12}\left(\frac{\partial z}{\partial s}\right)^2 + A_{14}\frac{\partial z}{\partial s}\frac{\partial \varphi}{\partial s} - (A_{15} + A_{23})\frac{\partial z}{\partial s}\frac{\partial r}{\partial s} -$$

$$A_{24}\left(\frac{\partial \varphi}{\partial s}\right)^2 + (A_{25} + A_{34})\frac{\partial \varphi}{\partial s}\frac{\partial r}{\partial s} - A_{35}\left(\frac{\partial r}{\partial s}\right)^2 = 0 \tag{11}$$

where the A_{ij} are minors obtained from the first four rows, with the ith and j^{th} columns omitted.

Just as the two-dimensional method requires the existence in the plane of characteristic curves (see reference 12), this method requires the existence in space of characteristic surfaces. Thus, the class of solutions of equation (11) is examined. In this class, there are those characteristic surfaces which can be parametrized by two space coordinates. For concreteness and because they are suitable for later application, the following two cases are considered: (1) $s = \varphi$ and $w = r$; and (2) $s = z$ and $w = r$. In case (1), equation (11) becomes

$$A_{12}^{\varphi}\left(\frac{\partial z}{\partial \varphi}\right)^2 + A_{14}^{\varphi}\frac{\partial z}{\partial \varphi} - A_{24}^{\varphi} = 0 \tag{12a}$$

where A_{ij}^{φ} are obtained from A_{ij} by putting $\left(\frac{\partial z}{\partial w}, \frac{\partial \varphi}{\partial w}, \frac{\partial r}{\partial w}\right) = \left(\frac{\partial z}{\partial r}, 0, 1\right)$ and taking the elements of the first row of equation (10) as functions of φ and r. In case (2), equation (11) becomes

$$A_{12}^{z} + A_{14}^{z}\frac{\partial \varphi}{\partial z} - A_{24}^{z}\left(\frac{\partial \varphi}{\partial z}\right)^2 = 0 \tag{12b}$$

where A_{ij}^{z} are obtained from A_{ij} by putting $\left(\frac{\partial z}{\partial w}, \frac{\partial \varphi}{\partial w}, \frac{\partial r}{\partial w}\right) = \left(0, \frac{\partial \varphi}{\partial r}, 1\right)$ and taking the elements of the first row of equation (10) as functions of z and r.

Since equation (12a) is a first-order equation in two independent variables, it may be solved with a given noncharacteristic initial curve $z = f_1(t)$, $\varphi = f_2(t)$, $r = f_3(t)$ having first derivatives such that

$\frac{df_3}{dt} \neq 0$, such that initial values of $\frac{\partial z}{\partial \varphi}$ and $\frac{\partial z}{\partial r}$ satisfy equation (12a) on the curve, and such that

2400

$$\frac{df_1}{dt} = \frac{\partial z}{\partial \varphi}\frac{df_2}{dt} + \frac{\partial z}{\partial r}\frac{df_3}{dt} \tag{13}$$

(see reference 11, p. 63 ff.), and similarly for equation (12b). Then for these two cases, respectively, the initial values of $\frac{\partial z}{\partial \varphi}$ and $\frac{\partial \varphi}{\partial z}$ must satisfy

$$A_{12}^{*}\left(\frac{\partial z}{\partial \varphi}\right)^2 + A_{14}^{*}\frac{\partial z}{\partial \varphi} - A_{24}^{*} = 0 \tag{14a}$$

$$A_{12}^{*} + A_{14}^{*}\frac{\partial \varphi}{\partial z} - A_{24}^{*}\left(\frac{\partial \varphi}{\partial z}\right)^2 = 0 \tag{14b}$$

where A_{ij}^{*} are obtained from A_{ij} by putting $\left(\frac{\partial z}{\partial w}, \frac{\partial \varphi}{\partial w}, \frac{\partial r}{\partial w}\right) = \left(\frac{dz}{dt}, \frac{d\varphi}{dt}, \frac{dr}{dt}\right)$ and taking the elements of the first row of equation (10) as functions of t. Equation (14a) has two solutions for $\frac{\partial z}{\partial \varphi}$ if

$$A_{14}^{*2} + 4\,A_{12}^{*}\,A_{24}^{*} > 0 \tag{15}$$

$$A_{12}^{*} \neq 0 \tag{16a}$$

Equation (14b) has two solutions for $\frac{\partial \varphi}{\partial z}$ if

$$A_{14}^{*2} + 4\,A_{12}^{*}\,A_{24}^{*} > 0 \tag{15}$$

$$A_{24}^{*} \neq 0 \tag{16b}$$

Thus, under either of these pairs of conditions there are two characteristic surfaces through the initial curve.

2400

Recall that in the two-dimensional case, there is a criterion for the existence of two one-parameter families of characteristic curves in the plane. These are taken to form a new curvilinear coordinate net - the characteristic coordinate net. The characteristic equations are then obtained as equations in the characteristic coordinates or parameters (reference 12). In three dimensions, the criterion is for the existence of two characteristic surfaces through each curve of a set of curves in space. If appropriate families are selected from this collection of surfaces, the procedure is somewhat analogous. Making such a selection requires specifying an initial value problem.

Initial Value Problem

Since, for example, Φ = constant satisfies the partial differential equation (1) in an arbitrary region, it is clear that a solution of equation (2) satisfying further conditions is wanted. Thus, in addition to the condition that a function $\Phi(r,\varphi,z)$ satisfies equation (2) in a given region, further conditions are required of the form: on a specified part Σ of the surface bounding the given region, Φ as well as its first derivatives $\frac{\partial\Phi}{\partial r}, \frac{\partial\Phi}{\partial\varphi}, \frac{\partial\Phi}{\partial z}$ are to take on a priori given values. These may be given arbitrarily up to certain limiting conditions.

Let an initial surface Σ be given. It is assumed to be not characteristic; that is, it does not satisfy equation (11). A one-parameter family of curves is selected which simply cover Σ and which are nowhere tangent to r = constant curves; each curve may therefore be parametrized by r. Under the conditions (15) and (16a) or (15) and (16b), there is a pair of characteristic surfaces passing through each curve, and these surfaces plus r = constant surfaces may be taken as coordinate surfaces of a new coordinate net, since the Jacobian of the transformation

$$\left.\begin{aligned} z &= z(u,v,r) \\ \varphi &= \varphi(u,v,r) \\ r &= r \end{aligned}\right\} \tag{17}$$

is not zero on Σ (reference 10). Σ may be given by

$$\left.\begin{aligned} z &= z(s,r) \\ \varphi &= \varphi(s,r) \\ r &= r \end{aligned}\right\} \tag{18}$$

2400

where s is now the parameter of the family selected, and the characteristic surfaces are

$$\left.\begin{aligned} z &= z(u,v_0,r) \\ \varphi &= \varphi(u,v_0,r) \\ r &= r \end{aligned}\right\} \tag{19}$$

and

$$\left.\begin{aligned} z &= z(u_0,v,r) \\ \varphi &= \varphi(u_0,v,r) \\ r &= r \end{aligned}\right\} \tag{20}$$

For convenience, put $u = \frac{1}{\sqrt{2}} s$ and $v = -u$ on Σ.

The limiting conditions on Σ other than those already mentioned are: the functions defining Σ and their first derivatives with respect to s are partially analytic functions with respect to w. This is to be true of all the functions defined on Σ (cf. reference 10). The remaining limiting conditions on the initial functions are the strip conditions. On any surface, in particular on Σ, $\frac{\partial\Phi}{\partial z}, \frac{\partial\Phi}{\partial\varphi}, \frac{\partial\Phi}{\partial r}$ must satisfy the two first-order strip conditions

$$\frac{\partial}{\partial s}\Phi = \frac{\partial\Phi}{\partial z}\frac{\partial z}{\partial s} + \frac{\partial\Phi}{\partial\varphi}\frac{\partial\varphi}{\partial s} + \frac{\partial\Phi}{\partial r}\frac{\partial r}{\partial s} \tag{21}$$

$$\frac{\partial}{\partial w}\Phi = \frac{\partial\Phi}{\partial z}\frac{\partial z}{\partial w} + \frac{\partial\Phi}{\partial\varphi}\frac{\partial\varphi}{\partial w} + \frac{\partial\Phi}{\partial r}\frac{\partial r}{\partial w} \tag{22}$$

Characteristic Equations

2400

In terms of the parametrizations of equations (19) and (20), the characteristic surfaces are obtained from equation (11) in the forms

$$A_{12}^{u}\left(\frac{\partial z}{\partial u}\right)^2 + A_{14}^{u}\frac{\partial z}{\partial u}\frac{\partial\varphi}{\partial u} - A_{24}^{u}\left(\frac{\partial\varphi}{\partial u}\right)^2 = 0 \tag{23}$$

$$A_{12}^{v}\left(\frac{\partial z}{\partial v}\right)^2 + A_{14}^{v}\frac{\partial z}{\partial v}\frac{\partial\varphi}{\partial v} - A_{24}^{v}\left(\frac{\partial\varphi}{\partial v}\right)^2 = 0 \tag{24}$$

Note that A_{ij}^{u} and A_{ij}^{v} are the same functions of $\frac{\partial z}{\partial r}, \frac{\partial\varphi}{\partial r}, a^{ij}$, the distinct notation indicating that here in the first case a^{ij} are considered functions of u,r and in the second case a^{ij} are considered functions of v,r so that in general the common notation Ω_{ij} will suffice.

$A_{12}^{*} \neq 0$ implies that $\Omega_{12} \neq 0$ on Σ. Let the root determined by equation (23) considered as a quadratic be $\rho_1 = \frac{-\Omega_{14} + \sqrt{\Omega_{14}^2 + 4\Omega_{12}\Omega_{24}}}{2\Omega_{12}}$ and let the root determined by equation (24) be $\rho_2 = \frac{-\Omega_{14} - \sqrt{\Omega_{14}^2 + 4\Omega_{12}\Omega_{24}}}{2\Omega_{12}}$. Then equations (23) and (24) become:

$$\frac{\partial z}{\partial u} - \rho_1\frac{\partial\varphi}{\partial u} = 0 \tag{25a}$$

$$\frac{\partial z}{\partial v} - \rho_2\frac{\partial\varphi}{\partial v} = 0 \tag{26a}$$

Similarly, if $A_{24}^{*} \neq 0$ then equations (23) and (24) become

$$\frac{\partial\varphi}{\partial u} - \tau_1\frac{\partial z}{\partial u} = 0 \tag{25b}$$

$$\frac{\partial\varphi}{\partial v} - \tau_2 \frac{\partial z}{\partial v} = 0 \tag{26b}$$

where $\tau_i = \frac{1}{\rho_i}$.

2400

On any surface the 12 third-order strip conditions must also hold. They are arranged as follows, where ϵ takes on the values z,φ,r successively and subscript notation is used for derivatives with respect to z,φ,r:

$$\begin{aligned}
\frac{\partial}{\partial w}\Phi_{z\epsilon} &= \Phi_{zz\epsilon}\frac{\partial z}{\partial w} + \Phi_{z\varphi\epsilon}\frac{\partial\varphi}{\partial w} + \Phi_{zr\epsilon}\frac{\partial r}{\partial w} \\
\frac{\partial}{\partial w}\Phi_{\varphi\epsilon} &= \Phi_{z\varphi\epsilon}\frac{\partial z}{\partial w} + \Phi_{\varphi\varphi\epsilon}\frac{\partial\varphi}{\partial w} + \Phi_{\varphi r\epsilon}\frac{\partial r}{\partial w} \\
\frac{\partial}{\partial w}\Phi_{r\epsilon} &= \Phi_{zr\epsilon}\frac{\partial z}{\partial w} + \Phi_{\varphi r\epsilon}\frac{\partial\varphi}{\partial w} + \Phi_{rr\epsilon}\frac{\partial r}{\partial w} \\
\frac{\partial}{\partial s}\Phi_{z\epsilon} &= \Phi_{zz\epsilon}\frac{\partial z}{\partial s} + \Phi_{z\varphi\epsilon}\frac{\partial\varphi}{\partial s} + \Phi_{zr\epsilon}\frac{\partial r}{\partial s} \\
\frac{\partial}{\partial s}\Phi_{\varphi\epsilon} &= \Phi_{z\varphi\epsilon}\frac{\partial z}{\partial s} + \Phi_{\varphi\varphi\epsilon}\frac{\partial\varphi}{\partial s} + \Phi_{r\varphi\epsilon}\frac{\partial r}{\partial s} \\
\frac{\partial}{\partial s}\Phi_{r\epsilon} &= \Phi_{zr\epsilon}\frac{\partial z}{\partial s} + \Phi_{\varphi r\epsilon}\frac{\partial\varphi}{\partial s} + \Phi_{rr\epsilon}\frac{\partial r}{\partial s}
\end{aligned} \tag{27}$$

In addition, the third derivatives must satisfy

$$a^{11}\Phi_{zz\epsilon} + 2a^{21}\Phi_{\varphi z\epsilon} + 2a^{31}\Phi_{rz\epsilon} + a^{22}\Phi_{\varphi\varphi\epsilon} + 2a^{32}\Phi_{r\varphi\epsilon} + a^{33}\Phi_{rr\epsilon} + a^{11}_{\epsilon}\Phi_{zz} +$$

$$2a^{21}_{\epsilon}\Phi_{\varphi z} + 2a^{31}_{\epsilon}\Phi_{rz} + a^{22}_{\epsilon}\Phi_{\varphi\varphi} + 2a^{32}_{\epsilon}\Phi_{r\varphi} + a^{33}_{\epsilon}\Phi_{rr} + b_{\epsilon} = 0 \tag{28}$$

which are obtained by differentiating equation (2). Let

$$B(\epsilon) = a^{11}_{\epsilon}\Phi_{zz} + 2a^{21}_{\epsilon}\Phi_{\varphi z} + 2a^{31}_{\epsilon}\Phi_{rz} + a^{22}_{\epsilon}\Phi_{\varphi\varphi} + 2a^{32}_{\epsilon}\Phi_{r\varphi} + a^{33}_{\epsilon}\Phi_{rr} + b_{\epsilon} \tag{29}$$

2400

so that in equations (27) and (28) there are for each ϵ seven linear nonhomogeneous equations in six unknowns which may be written as:

$$\begin{bmatrix} a^{11} & 2a^{12} & 2a^{13} & a^{22} & 2a^{23} & a^{33} \\ \frac{\partial z}{\partial w} & \frac{\partial \varphi}{\partial w} & \frac{\partial r}{\partial w} & 0 & 0 & 0 \\ 0 & \frac{\partial z}{\partial w} & 0 & \frac{\partial \varphi}{\partial w} & \frac{\partial r}{\partial w} & 0 \\ 0 & 0 & \frac{\partial z}{\partial w} & 0 & \frac{\partial \varphi}{\partial w} & \frac{\partial r}{\partial w} \\ \frac{\partial z}{\partial s} & \frac{\partial \varphi}{\partial s} & \frac{\partial r}{\partial s} & 0 & 0 & 0 \\ 0 & \frac{\partial z}{\partial s} & 0 & \frac{\partial \varphi}{\partial s} & \frac{\partial r}{\partial s} & 0 \\ 0 & 0 & \frac{\partial z}{\partial s} & 0 & \frac{\partial \varphi}{\partial s} & \frac{\partial r}{\partial s} \end{bmatrix} \begin{bmatrix} \Phi_{zz\epsilon} \\ \Phi_{z\varphi\epsilon} \\ \Phi_{zr\epsilon} \\ \Phi_{\varphi\varphi\epsilon} \\ \Phi_{\varphi r\epsilon} \\ \Phi_{rr\epsilon} \end{bmatrix} = \begin{bmatrix} -B(\epsilon) \\ \frac{\partial}{\partial w}\Phi_{z\epsilon} \\ \frac{\partial}{\partial w}\Phi_{\varphi\epsilon} \\ \frac{\partial}{\partial w}\Phi_{r\epsilon} \\ \frac{\partial}{\partial s}\Phi_{z\epsilon} \\ \frac{\partial}{\partial s}\Phi_{\varphi\epsilon} \\ \frac{\partial}{\partial s}\Phi_{r\epsilon} \end{bmatrix} \tag{30}$$

Now if the surface is a characteristic surface, the matrix of equation (30) is of rank 5 or less (cf. equation (10)) and thus, as consistency requires, so is the augmented matrix. This in turn requires that the two sixth-order minors formed from the augmented matrix by deleting the last row and second column and the first row and second column be zero. In particular, on the characteristic surfaces given by equations (19) and (20), these minors upon expansion become:

$$-\Omega_{24}\frac{\partial\varphi}{\partial u}\frac{\partial}{\partial u}\Phi_{z\epsilon} + \Omega_{12}\frac{\partial z}{\partial u}\frac{\partial}{\partial u}\Phi_{\varphi\epsilon}$$

$$= \left\{ \left[2a^{13} - a^{33}\frac{\partial z}{\partial r}\right]\frac{\partial}{\partial r}\Phi_{z\epsilon} + \left[2a^{23} - a^{33}\frac{\partial\varphi}{\partial r}\right]\frac{\partial}{\partial r}\Phi_{\varphi\epsilon} + a^{33}\frac{\partial}{\partial r}\Phi_{r\epsilon} + B(\epsilon)\right\}\frac{\partial z}{\partial u}\frac{\partial\varphi}{\partial u} \tag{31}$$

on v = constant,

$$-\Omega_{24}\frac{\partial\varphi}{\partial v}\frac{\partial}{\partial v}\Phi_{z\epsilon}+\Omega_{12}\frac{\partial z}{\partial v}\frac{\partial}{\partial v}\Phi_{\varphi\epsilon}$$

$$=\left\{\left[2a^{13}-a^{33}\frac{\partial z}{\partial r}\right]\frac{\partial}{\partial r}\Phi_{z\epsilon}+\left[2a^{23}-a^{33}\frac{\partial\varphi}{\partial r}\right]\frac{\partial}{\partial r}\Phi_{\varphi\epsilon}+a^{33}\frac{\partial}{\partial r}\Phi_{r\epsilon}+B(\epsilon)\right\}\frac{\partial z}{\partial v}\frac{\partial\varphi}{\partial v} \tag{32}$$

on u = constant, and if $\frac{\partial z}{\partial u}\frac{\partial\varphi}{\partial u}\neq 0$,

$$\frac{\partial z}{\partial r}\frac{\partial}{\partial u}\Phi_{z\epsilon}+\frac{\partial\varphi}{\partial r}\frac{\partial}{\partial u}\Phi_{\varphi\epsilon}+\frac{\partial}{\partial u}\Phi_{r\epsilon}=\frac{\partial z}{\partial u}\frac{\partial}{\partial r}\Phi_{z\epsilon}+\frac{\partial\varphi}{\partial u}\frac{\partial}{\partial r}\Phi_{\varphi\epsilon} \tag{33}$$

on v = constant, and if $\frac{\partial z}{\partial v}\frac{\partial\varphi}{\partial v}\neq 0$,

$$\frac{\partial z}{\partial r}\frac{\partial}{\partial v}\Phi_{z\epsilon}+\frac{\partial\varphi}{\partial r}\frac{\partial}{\partial v}\Phi_{\varphi\epsilon}+\frac{\partial}{\partial v}\Phi_{r\epsilon}=\frac{\partial z}{\partial v}\frac{\partial}{\partial r}\Phi_{z\epsilon}+\frac{\partial\varphi}{\partial v}\frac{\partial}{\partial r}\Phi_{\varphi\epsilon} \tag{34}$$

on u = constant.

By means of equations (25a) and (26a), equations (31) and (32) may be expressed in terms of ρ_1 and ρ_2:

$$\Omega_{24}\frac{\partial}{\partial u}\Phi_{z\epsilon}-\Omega_{12}\rho_1\frac{\partial}{\partial u}\Phi_{\varphi\epsilon}+E(\epsilon)\frac{\partial z}{\partial u}=0 \tag{35a}$$

$$\Omega_{24}\frac{\partial}{\partial v}\Phi_{z\epsilon}-\Omega_{12}\rho_2\frac{\partial}{\partial v}\Phi_{\varphi\epsilon}+E(\epsilon)\frac{\partial z}{\partial v}=0 \tag{36a}$$

By means of equations (25b) and (26b), equations (31) and (32) may be expressed in terms of τ_1 and τ_2:

$$\Omega_{24}\tau_1\frac{\partial}{\partial u}\Phi_{z\epsilon}-\Omega_{12}\frac{\partial}{\partial u}\Phi_{\varphi\epsilon}+E(\epsilon)\frac{\partial\varphi}{\partial u}=0 \tag{35b}$$

$$\Omega_{24}\tau_2\frac{\partial}{\partial v}\Phi_{z\epsilon}-\Omega_{12}\frac{\partial}{\partial v}\Phi_{\varphi\epsilon}+E(\epsilon)\frac{\partial\varphi}{\partial v}=0 \tag{36b}$$

2400

Now consider equations (25b) and (26b); equations (21), and (7) to (9) with $s = u$; equations (35b) and (36b) with z for ϵ; equation (35b) with φ and r for ϵ; and equation (33) with φ and r for ϵ. These are 12 partial differential equations for 12 functions

2400

$$(y_\alpha) = (z,\varphi,\Phi,\Phi_z,\Phi_\varphi,\Phi_r,\Phi_{zz},\Phi_{z\varphi},\Phi_{zr},\Phi_{\varphi\varphi},\Phi_{\varphi r},\Phi_{rr})$$

in (u,v,r) space. They are first-order nonlinear equations, which, however, are linear and homogenous in derivatives with respect to u and v. They have the form

$$\left.\begin{aligned} &\sum_{\alpha=1}^{12} a_i^\alpha \frac{\partial y_\alpha}{\partial u} = 0 \qquad i = 1,\ 3,\ 4,\text{--},\ 7,\ 9,\text{--},\ 12 \\ &\sum_{\alpha=1}^{12} a_j^\alpha \frac{\partial y_\alpha}{\partial v} = 0 \qquad j = 2,\ 8 \end{aligned}\right\} \tag{37}$$

where a_i^α and a_j^α are functions of y_α and $\frac{\partial y_\alpha}{\partial r}$.

In the (u,v,r) space the initial surface Σ becomes $u + v = 0$. The values of the functions y_α on Σ are $(y_\alpha)^{(0)} = y_\alpha(u,-u,r) = \bar{y}_\alpha(\sqrt{2}\,u,r)$, where $\bar{y}_\alpha$ are initial values on Σ as functions of s,r. The values of $\frac{\partial y_\alpha}{\partial r}$ on Σ are $\left(\frac{\partial y_\alpha}{\partial r}\right)^{(0)} = \frac{\partial \bar{y}_\alpha}{\partial r}$.

The values $\left(\frac{\partial y_\alpha}{\partial u}\right)^{(0)}$ and $\left(\frac{\partial y_\alpha}{\partial v}\right)^{(0)}$ of $\frac{\partial y_\alpha}{\partial u}$ and $\frac{\partial y_\alpha}{\partial v}$ on Σ are obtained by solving equation (37) on the initial surface with

$$\left(\frac{\partial y_k}{\partial u}\right)^{(0)} - \left(\frac{\partial y_k}{\partial v}\right)^{(0)} = \sqrt{2}\,\frac{\partial \bar{y}_k}{\partial s} \qquad k = 1,\ 2,\ 3,\ldots,\ 12 \tag{38}$$

Equations (38) come from $\bar{y}_\alpha(s,r) = y_\alpha(u(s),\ v(s),\ r)$ and the relations $s = \sqrt{2}\,u = -\sqrt{2}\,v$ on the initial surface. Finally, $\frac{\partial^2 y_\alpha}{\partial r\,\partial u}$ and $\frac{\partial^2 y_\alpha}{\partial r\,\partial v}$ on Σ are, respectively, $\left(\frac{\partial^2 y_\alpha}{\partial r\,\partial u}\right)^{(0)} = \frac{\partial}{\partial r}\left(\frac{\partial y_\alpha}{\partial u}\right)^{(0)}$ and $\left(\frac{\partial^2 y_\alpha}{\partial r\,\partial v}\right)^{(0)} = \frac{\partial}{\partial r}\left(\frac{\partial y_\alpha}{\partial v}\right)^{(0)}$.

The 12 equations (37) with these initial functions on $u + v = 0$ constitute an initial value problem. It follows from the proof of reference 10 for the general case that this problem is equivalent to the initial value problem for equation (2). A solution of this problem thus leads immediately to a solution of the initial value problem for equation (2). Uniqueness is also preserved.

2400

Solution of Equivalent Problem

Equations (26b) and (36b) with $\epsilon = z$ are differentiated with respect to u, and the others are differentiated with respect to v so that there are obtained 12 equations linear in 12 second-order uv derivatives and nonhomogeneous,

$$\sum_{\alpha} D_{i\alpha} \frac{\partial^2 y_\alpha}{\partial u\, \partial v} = G_i \tag{39}$$

The matrix of $D_{i\alpha}$ of this system is:

$$\left[\begin{array}{cc|cccc|cccccc}
-\tau_1 & 1 & & & & & & & & & & \\
-\tau_2 & 1 & & & & & & & & & & \\
\hline
\Phi_z & \Phi_\varphi & -1 & 0 & 0 & 0 & & & & & & \\
\Phi_{zz} & \Phi_{z\varphi} & 0 & -1 & 0 & 0 & & & & & & \\
\Phi_{z\varphi} & \Phi_{\varphi\varphi} & 0 & 0 & -1 & 0 & & & & & & \\
\Phi_{zr} & \Phi_{\varphi r} & 0 & 0 & 0 & -1 & & & & & & \\
\hline
0 & E(z) & & & & & \tau_1\Omega_{24} & -\Omega_{12} & 0 & 0 & 0 & 0 \\
0 & E(z) & & & & & \tau_2\Omega_{24} & -\Omega_{12} & 0 & 0 & 0 & 0 \\
0 & E(\varphi) & & & & & 0 & \tau_1\Omega_{24} & 0 & -\Omega_{12} & 0 & 0 \\
0 & E(r) & & & & & 0 & 0 & \tau_1\Omega_{24} & 0 & -\Omega_{12} & 0 \\
-\frac{\partial}{\partial r}\Phi_{z\varphi} & -\frac{\partial}{\partial r}\Phi_{\varphi\varphi} & & & & & 0 & z_r & 0 & \varphi_r & 1 & 0 \\
-\frac{\partial}{\partial r}\Phi_{zr} & -\frac{\partial}{\partial r}\Phi_{\varphi r} & & & & & 0 & 0 & z_r & 0 & \varphi_r & 1
\end{array}\right]$$

in which the elements of the empty rectangles are all zero. Briefly,

$$D_{i\alpha} = \begin{bmatrix} \Gamma_1 & 0 & \\ \Gamma_2 & \Gamma_3 & 0 \\ \Gamma_4 & 0 & \Gamma_5 \end{bmatrix}$$

The augmented column G_i of equation (39) is

$$\begin{bmatrix}
\frac{\partial \tau_1}{\partial v}\frac{\partial z}{\partial u} \\
\frac{\partial \tau_2}{\partial u}\frac{\partial z}{\partial v} \\
-\frac{\partial \Phi_z}{\partial v}\frac{\partial z}{\partial u} - \frac{\partial \Phi_\varphi}{\partial v}\frac{\partial \varphi}{\partial u} \\
-\frac{\partial \Phi_{zz}}{\partial v}\frac{\partial z}{\partial u} - \frac{\partial \Phi_{z\varphi}}{\partial v}\frac{\partial \varphi}{\partial u} \\
-\frac{\partial \Phi_{z\varphi}}{\partial v}\frac{\partial z}{\partial u} - \frac{\partial \Phi_{\varphi\varphi}}{\partial v}\frac{\partial \varphi}{\partial u} \\
-\frac{\partial \Phi_{zr}}{\partial v}\frac{\partial z}{\partial u} - \frac{\partial \Phi_{\varphi r}}{\partial v}\frac{\partial \varphi}{\partial u} \\
-\frac{\partial E(z)}{\partial v}\frac{\partial \varphi}{\partial u} - \frac{\partial \tau_1 \Omega_{24}}{\partial v}\frac{\partial \Phi_{zz}}{\partial u} + \frac{\partial \Omega_{12}}{\partial v}\frac{\partial \Phi_{\varphi z}}{\partial u} \\
-\frac{\partial E(z)}{\partial u}\frac{\partial \varphi}{\partial v} - \frac{\partial \tau_2 \Omega_{24}}{\partial u}\frac{\partial \Phi_{zz}}{\partial v} + \frac{\partial \Omega_{12}}{\partial u}\frac{\partial \Phi_{z\varphi}}{\partial v} \\
-\frac{\partial E(\varphi)}{\partial v}\frac{\partial \varphi}{\partial u} + \frac{\partial \Omega_{12}}{\partial v}\frac{\partial \Phi_{\varphi\varphi}}{\partial u} - \frac{\partial \tau_1 \Omega_{24}}{\partial v}\frac{\partial \Phi_{z\varphi}}{\partial u} \\
-\frac{\partial E(r)}{\partial v}\frac{\partial \varphi}{\partial u} + \frac{\partial \Omega_{12}}{\partial v}\frac{\partial \Phi_{\varphi r}}{\partial u} - \frac{\partial \tau_1 \Omega_{24}}{\partial v}\frac{\partial \Phi_{zr}}{\partial u} \\
\left(\frac{\partial^2}{\partial v\,\partial r}\Phi_{\varphi z}\right)\frac{\partial z}{\partial u} + \left(\frac{\partial^2}{\partial v\,\partial r}\Phi_{\varphi\varphi}\right)\frac{\partial \varphi}{\partial u} - \frac{\partial z_r}{\partial v}\frac{\partial \Phi_{\varphi z}}{\partial u} - \frac{\partial \varphi_r}{\partial v}\frac{\partial \Phi_{\varphi\varphi}}{\partial u} \\
\left(\frac{\partial^2}{\partial v\,\partial r}\Phi_{rz}\right)\frac{\partial z}{\partial u} + \left(\frac{\partial^2}{\partial v\,\partial r}\Phi_{r\varphi}\right)\frac{\partial \varphi}{\partial u} - \frac{\partial z_r}{\partial v}\frac{\partial \Phi_{zr}}{\partial u} - \frac{\partial \varphi_r}{\partial v}\frac{\partial \Phi_{\varphi r}}{\partial u}
\end{bmatrix}$$

Solution of this system yields a set of equations of the form

$$\frac{\partial^2 y_\alpha}{\partial u\,\partial v} = f_\alpha \qquad \alpha = 1, ---, 12 \tag{40}$$

where

$$f_\alpha = f_\alpha\left(y_\beta; \frac{\partial y_\beta}{\partial u}, \frac{\partial y_\beta}{\partial v}, \frac{\partial y_\beta}{\partial r}; \frac{\partial^2 y_\beta}{\partial u\,\partial r}, \frac{\partial^2 y_\beta}{\partial v\,\partial r}\right)$$

since $\tau_2 = 0$ when $\Omega_{12} = 0$, then $\sum_\alpha D_{8\alpha} \frac{\partial^2 y_\alpha}{\partial u\,\partial v} = G_8$ is satisfied identically and $\frac{\partial^2 y_8}{\partial u\,\partial v}$ may be chosen arbitrarily and the remaining equations solved for the remaining second derivatives. To solve the transformed initial value problem, reference 10 uses an extension of the Picard method.

If equation (40) is integrated with respect to v from the initial surface $u + v = 0$ to an arbitrary point u,v,r (see fig. 1),

$$\frac{\partial y_\alpha}{\partial u}(u,v,r) - \frac{\partial y_\alpha}{\partial u}(u,-u,r) = \int_{-u}^{v} f_\alpha\, dv \tag{41}$$

Then integration again with respect to u from $u = -v$ to any value of u gives y_α as

$$\begin{aligned} y_\alpha(u,v,r) &= y_\alpha(-v,v,r) + \int_{-v}^{u} \frac{\partial y_\alpha}{\partial u}(u,v,r)\, du \\ &= y_\alpha(-v,v,r) + \int_{-v}^{u} \left[\frac{\partial y_\alpha}{\partial u}(u,-u,r) + \int_{-u}^{v} f_\alpha\, dv\right] du \end{aligned} \tag{42}$$

The quantities $y_\alpha(-v,v,r)$ and $\frac{\partial y_\alpha}{\partial u}(u,-u,r)$ are known, but f_α depends on values of y_α at points not on $u + v = 0$; a zeroth approximation $f_\alpha^{(0)}$ is therefore chosen for f_α and a method of successive approximations is employed. Let $f_\alpha^{(0)}$ be f_α with the values of its arguments assuming their initial values at corresponding v. This gives new values $\left(\frac{\partial y_\alpha}{\partial u}\right)^{(1)}$ for $\frac{\partial y_\alpha}{\partial u}(u,v,r)$ and in turn new values $(y_\alpha)^{(1)}$ for $y_\alpha(u,v,r)$. The relation

$$\frac{\partial y_\alpha}{\partial v}(u,v,r) = \frac{\partial y_\alpha}{\partial v}(-v,v,r) + \int_{-v}^{u} f_\alpha \, du \tag{43}$$

similarly gives $\left(\frac{\partial y_\alpha}{\partial v}\right)^{(1)}$. The functions $(y_\alpha)^{(1)}, \left(\frac{\partial y_\alpha}{\partial u}\right)^{(1)}, \left(\frac{\partial y_\alpha}{\partial v}\right)^{(1)}$ and their derivatives with respect to r are substituted back into equations (42) and (43) and the process is repeated. In general,

2400

$$\left(\frac{\partial y_\alpha}{\partial u}\right)^{(\nu+1)} = \left(\frac{\partial y_\alpha}{\partial u}\right)^{(0)} + \int_{-u}^{v} f_\alpha^{(\nu)} \, dv' \tag{44}$$

$$\left(\frac{\partial y_\alpha}{\partial v}\right)^{(\nu+1)} = \left(\frac{\partial y_\alpha}{\partial v}\right)^{(0)} + \int_{-v}^{u} f_\alpha^{(\nu)} \, du' \tag{45}$$

and

$$y_\alpha^{(\nu+1)} = y_\alpha^{(0)} + \int_{-v}^{u} \left(\frac{\partial y_\alpha}{\partial u}\right)^{(\nu+1)} du' \tag{46}$$

where $\nu = 1, 2, \ldots$

The $y_\alpha^{(\nu)}$ converge to the solution of the transformed problem.

In the application which is now to be considered, the design of a rotor, $A_{24}^* \neq 0$ does not always hold, so that the equivalent problem must also be expressed in terms of equations (25a), (26a); equations (21), and (7) to (9) with $s = u$; equation (35a) with z and φ for ϵ; equation (36a) with φ for ϵ; equation (35a) with r for ϵ; and equation (33) with z and r for ϵ. The use in this application of two different formulations of the equivalent problem can be avoided by putting $w = \varphi$ or $w = z$ instead of $w = r$ when characteristic surfaces are selected. Then, the physical condition which must be satisfied is $w_z^2 + w_\varphi^2 > a^2$, which may be assumed to hold everywhere.

ROTOR DESIGN

Shock Surface Σ_1 and Upstream Suction Surface Σ_2

As an application of the general theory, the flow of air through a rotor of an axial compressor is considered. Attention is focused on a single rotor passage and on the air flowing into, through, and out of this passage. As the air upstream of the blade passage flows into the blade passage, the blades affect it in one of the following general ways. In the idealized case of thin blades, the upstream velocity can be arbitrarily prescribed subject only to the condition that the components be uniform in the tangential direction, and then if the design point is chosen so that a blade is tangent to the relative stream surface at its leading edge (that is, if the blade satisfies $\frac{1}{r} w_\varphi = w_r \frac{\partial\varphi}{\partial r} + w_z \frac{\partial\varphi}{\partial z}$ along its leading edge), then the air will flow smoothly into the passage. On the other hand, if the blades are not thin (nor have cusp-shaped leading edges) then for no steady upstream velocity that may be specified can both the pressure and suction surfaces satisfy the condition, so it would seem that there would have to be a discontinuity in velocity as the air enters the blade passage. An indication of what actually happens for a blade with arbitrary leading edge is given by the following result (cf. Jones, reference 13) for approximately straight leading edges with approximately constant wedge angles.

(a) If the component of the upstream relative velocity in the plane normal to the leading edge is supersonic, then in all other respects the upstream velocity may be arbitrarily prescribed and a discontinuity, or shock, generally will occur.

(b) If the component of the upstream relative velocity in the plane normal to the leading edge is subsonic, then this velocity component makes zero angle with the blade in this plane and the air passes smoothly into the passage. In general, the condition on the velocity in (a) permits specification of upstream velocities within a considerable range including steady, uniform upstream velocities. In (b) the rotor effects an adjustment of the velocity upstream making an a priori prescription of the velocity upstream unrealistic.

In view of the foregoing considerations, it will be assumed in the sequel that the upstream velocity components are prescribed according to (a). If the wedge angle (at each radius) is small enough and if at design point the suction surface at its leading edge is tangent to the upstream relative flow, then there will be a shock surface Σ_1 coming off the pressure surface attached to its leading edge ① and going across the passage and downstream toward the suction surface with leading edge ② (fig. 2).

The shock surface Σ_1 is described by

$$r^2\left[\left(\frac{w_z}{a}\right)^2 - \lambda\right]\varphi_z^2 + r^2\left[\left(\frac{w_r}{a}\right)^2 - \lambda\right]\varphi_r^2 + 2r^2\frac{w_z w_r}{a^2}\varphi_z\varphi_r -$$

$$2r\frac{w_z w_\varphi}{a^2}\varphi\varphi_z - 2r\frac{w_\varphi w_r}{a^2}\varphi_r + \left(\frac{w_\varphi}{a}\right)^2 - \lambda = 0 \tag{47}$$

2400

with a given leading edge. In equation (47), subscript notation is used for derivatives of φ; λ is a measure of the entropy change across Σ_1; and the coefficients are evaluated upstream of Σ_1. In order to obtain the differential equation for Σ_1, first note that

$$\cos\alpha_1 = \frac{\varphi_r w_r - \frac{1}{r}w_\varphi + \varphi_z w_z}{\sqrt{\varphi_r^2 + \frac{1}{r^2} + \varphi_z^2}\sqrt{w_r^2 + w_\varphi^2 + w_z^2}} = \frac{r\varphi_z w_z - w_\varphi + r\varphi_r w_r}{\sigma W}$$

(cf. fig. 3). Or in terms of β_1,

$$\frac{(r\varphi_r w_r - w_\varphi + r\varphi_z w_z)^2}{\sigma^2 W^2} = \sin^2\beta_1 \tag{47a}$$

But by means of the conservation principles for shocks and the Prandtl relation, $\sin^2\beta_1$ is in turn expressible in terms of pressure ratio according to

$$\frac{p_2}{p_1} = \gamma(1 - \mu^2)\frac{W_1^2}{a_1^2}\sin^2\beta_1 - \mu^2 \tag{47b}$$

(see reference 12.)

Finally, the Rankine-Hugoniot relation gives

$$\frac{p_2}{p_1} = \frac{\mu^2 - K\left(\frac{p_2}{p_1}\right)^{1/\gamma}}{\mu^2 K\left(\frac{p_2}{p_1}\right)^{(1/\gamma)} - 1}$$

where $K = e^{-\Delta S/c_p}$. That is, $\frac{p_2}{p_1}$ may be expressed in terms of entropy change across the shock,

2400

$$\frac{p_2}{p_1} = \xi(K) \tag{47c}$$

when $\sin^2 \beta_1$ and $\frac{p_2}{p_1}$ are eliminated among equations (47a), (47b), and (47c), equation (47) is obtained with $\frac{\xi(K) + \mu^2}{\gamma(1 - \mu^2)} = \lambda$.

It is assumed that Σ_1 intersects the suction surface along a curve c_{12}. Then the blade passage is split into a region upstream of Σ_1 and a region downstream of Σ_1. Again, for simplicity, let the suction surface between the leading edge ② and the curve c_{12} be constructed to coincide with a stream surface of the upstream velocity. This part Σ_2 of the suction surface then is described by

$$w_z\varphi_z + w_r\varphi_r - \frac{1}{r} w_\varphi = 0 \tag{48}$$

with a given leading edge, and the intersection of Σ_1 and Σ_2 determines c_{12}. Thus, the effect of the rotor is confined to the region downstream of Σ_1.

The entropy is now assumed to be uniform upstream and downstream of Σ_1, and its change is constant across Σ_1. Then if the flow is irrotational upstream of Σ_1, it will be irrotational downstream of Σ_1. As a result, equation (1) will hold downstream of Σ_1. The downstream irrotationality under the given assumptions may be demonstrated as follows: On either side of Σ_1 (reference 9)

$$- \overline{W}\times(\nabla\times\overline{V}) = - \nabla I + T\nabla S$$

By hypothesis, $\nabla I = 0$ upstream of Σ_1. Since I does not change in crossing a shock and entropy is constant downstream by hypothesis, $\nabla I = 0$ downstream of Σ_1 (use $T\frac{DS}{Dt} = \frac{DI}{Dt}$, reference 9). Thus downstream of Σ_1, $\overline{W}\times(\nabla\times\overline{V}) = 0$. If $\nabla\times\overline{V} \neq 0$, then a vortex line must follow a relative streamline. Since it cannot terminate, it must intersect Σ_1 and so $\nabla\times\overline{V}$ has a component normal to Σ_1 at Σ_1. However, this implies that the vorticity upstream is nonzero since the normal component will not change across the shock. Thus, $\nabla\times\overline{V} \neq 0$ leads to a contradiction.

2400

Note that among the consequences of the assumptions λ and I are constant. For simplicity it will be assumed that H = constant and $v_\theta r$ = constant upstream. Moreover, if $w_r = 0$ upstream of Σ_1, then w_z = constant and equation (47) is of the form:

$$(C_1r^2 + C_2)\varphi_z^2 + (C_3r^2 + C_4)\varphi_r^2 + (C_5r^2 + C_6)\varphi_z + C_7r^2 + C_8 + \frac{C_9}{r^2} = 0 \tag{49}$$

since $a^2 = K_1 - \frac{K_2}{r^2}$. All C_i and K_i are constants. When equation (49) is subjected to a Legendre transformation

$$F(\zeta,\eta) + \varphi(z,r) = z\zeta + r\eta$$

$$\zeta = \frac{\partial\varphi}{\partial z} \qquad \eta = \frac{\partial\varphi}{\partial r}$$

$$z = \frac{\partial F}{\partial\zeta} \qquad r = \frac{\partial F}{\partial\eta}$$

the following expression is obtained:

$$(C_1\zeta^2 + C_3\eta^2 + C_5\zeta + C_7)\left(\frac{\partial F}{\partial\eta}\right)^4 + (C_2\zeta^2 + C_4\eta^2 + C_6\zeta + C_8)\left(\frac{\partial F}{\partial\eta}\right)^2 + C_9 = 0 \tag{50}$$

so that

$$F(\zeta,\eta) = \int N(\zeta,\eta)\ d\eta + L(\zeta) \tag{51}$$

If the velocity on the upstream side of the shock is $(w_{z1},\ w_{\varphi 1},\ w_{r1})$ and on the downstream side $(w_{z2},\ w_{\varphi 2},\ w_{r2})$, then from the shock relations, 2400

$$\left.\begin{aligned}
w_{z2} &= r\varphi_z a_1^2 \frac{1-\mu^2}{r\varphi_z w_{z1} - w_{\varphi 1} + r\varphi_r w_{r1}} + \frac{1-\mu^2}{\sigma^2}\left[\bar{\sigma}_1^2 w_{z1} + r\varphi_z w_{\varphi 1} - r\varphi_z r\varphi_r w_{r1}\right] \\
w_{\varphi 2} &= -a_1^2 \frac{1-\mu^2}{r\varphi_z w_{z1} - w_{\varphi 1} + r\varphi_r w_{r1}} + \frac{1-\mu^2}{\sigma^2}\left[r\varphi_z w_{z1} + \bar{\sigma}_2^2 w_{\varphi 1} + r\varphi_r w_{r1}\right] \\
w_{r2} &= r\varphi_r a_1^2 \frac{1-\mu^2}{r\varphi_z w_{z1} - w_{\varphi 1} + r\varphi_r w_{r1}} + \frac{1-\mu^2}{\sigma^2}\left[-r\varphi_z r\varphi_z w_{z1} + r\varphi_r w_{\varphi 1} + \bar{\sigma}_3^2 w_{r1}\right]
\end{aligned}\right\} \tag{52}$$

where a_1 is the upstream sonic velocity and $\bar{\sigma}_i$ are functions of $r\varphi_r$, $r\varphi_z$ related to σ. This is shown as follows.

If the velocity is decomposed in the direction normal to Σ_1 and in the two parametric directions on Σ_1, the components being denoted by W_N, W_{TZ}, W_{TR}, respectively, then on either side of Σ_1 there is the relation (fig. 2):

$$\left.\begin{aligned}
W_N &= A^{11}\ w_r + A^{12}\ w_\varphi + A^{13}\ w_z \\
W_{TZ} &= A^{21}\ w_r + A^{22}\ w_\varphi + A^{23}\ w_z \\
W_{TR} &= A^{31}\ w_r + A^{32}\ w_\varphi + A^{33}\ w_z
\end{aligned}\right\} \tag{52a}$$

where the matrix of coefficients is

$$\frac{1}{\sigma^2}\begin{pmatrix} r\varphi_r\sigma & -\sigma & r\varphi_z\sigma \\ \sigma_3^2\sigma_1 & r\varphi_r\sigma_1 & -r\varphi_r r\varphi_z\sigma_1 \\ -r\varphi_r r\varphi_z\sigma_3 & r\varphi_z\sigma_3 & \sigma_1^2\sigma_3 \end{pmatrix}$$

2400

Equation (52a) comes from

$$W_N = \frac{r\varphi_z w_z - w_\varphi + r\varphi_r w_r}{\sigma}$$

$$W_{TZ} = \left(w_r - W_N \frac{r\varphi_r}{\sigma}\right)\sigma_1$$

$$W_{TR} = \left(w_z - W_N \frac{r\varphi_z}{\sigma}\right)\sigma_3$$

where $W_N \frac{r\varphi_r}{\sigma}$ is the projection of W_N in the radial direction, and $W_N \frac{r\varphi_z}{\sigma}$ is the projection of W_N in the axial direction,

$$\sigma_1^2 = \sigma^2 - (r\varphi_z)^2$$

$$\sigma_3^2 = \sigma^2 - (r\varphi_r)^2$$

W_{TZ}/σ_1 is the projection of W_{TZ} in the radial direction and W_{TR}/σ_3 is the projection of W_{TR} in the axial direction. Since the determinant of the matrix of coefficients of equation (52a) is not zero,

$$\left.\begin{aligned} w_r &= B^{11} W_N + B^{12} W_{TZ} + B^{13} W_{TR} \\ w_\varphi &= B^{21} W_N + B^{22} W_{TZ} + B^{23} W_{TR} \\ w_z &= B^{31} W_N + B^{32} W_{TZ} + B^{33} W_{TR} \end{aligned}\right\} \qquad (52b)$$

where the matrix of coefficients is

$$\begin{pmatrix} \frac{r\varphi_r}{\sigma} & \frac{1}{\sigma_1} & 0 \\ -\frac{1}{\sigma} & \frac{r\varphi_r}{\sigma_1} & \frac{r\varphi_z}{\sigma_3} \\ \frac{r\varphi_z}{\sigma} & 0 & \frac{1}{\sigma_3} \end{pmatrix}$$

2400

Inasmuch as equations (52a) and (52b) hold on both sides of the shock, the subscripts 2 may be placed on velocity components in equation (52b) and the subscripts 1 on velocity components in equation (52a). Furthermore, note that $W_{TZ1} = W_{TZ2}$, $W_{TR1} = W_{TR2}$, $W_{N1}W_{N2} = c_*^2 - \mu^2 W_{T1}^2$ (Prandtl relation, reference 12) and $c_*^2 = \mu^2 (2h_1 + W_1^2)$. Substituting equations (52a) in (52b) gives equation (52).

Downstream Suction Surface Σ_3

As mentioned in the section GENERAL THEORY, it is necessary to know the first derivatives of Φ, which is essentially the velocity in this case, on a surface Σ in the rotor passage. This surface is taken to be one obtained from Σ_1 and Σ_3, the part of the suction surface downstream of c_{12}. It will be seen that on such a surface the conditions required in GENERAL THEORY can be satisfied. Thus, conditions on Σ_3 must now be prescribed to completely determine its shape and the velocity on it. This may be done in many ways. How it is done best, the factors involved, and the limitations imposed depend on performance and constructibility requirements of the rotor. If, for the moment, it is assumed that the shape of Σ_3 and the velocity on it have been completely determined, then according to the GENERAL THEORY, the velocity (w_r, w_φ, w_z) can be determined at every point in the rotor passage. Thus, in particular, the pressure surface is obtained as the stream surface through the leading edge ①; the velocity distribution on it, and the velocity distribution downstream of the rotor are also obtained. On the pressure surface there are certain constructibility requirements, and on the velocity distributions, certain performance requirements. An obvious requirement is that the pressure surface should intersect the suction surface in a curve c_{34} which may be taken as the trailing edge of the rotor blade. Another requirement is that the velocity distribution on

the pressure surface (as well as on the suction surface) not give rise to shocks and be fairly "smooth" for high efficiency. Further, uniform work input or free vortex flow downstream of the rotor is desirable. In order to meet these and other requirements, there are the choices in the selection of conditions on Σ_3 plus the choice of the as yet undetermined constant, λ. The following procedure is given as an example.

For strength and simplicity of construction, a good specification would seem to be that Σ_3 have straight-line elements sloping slightly toward the radial direction in z = constant planes (fig. 1). Thus $\Sigma_3: \varphi = \varphi(z,r)$ would be given implicitly by

$$\sin\left[m(z) - \varphi\right] = -\frac{l(z)\cos m(z)}{r} \tag{53}$$

with the stipulation that $m(z) - \varphi$ be small and positive. Here $l(z)$, the intercept on the line $\varphi = \frac{\pi}{2}$, and $m(z)$, the angle with the line $\varphi = 0$, are determined in the interval (z_1, z_2) in terms of φ_r evaluated on c_{12} by

$$\tan\left[m(z) - \varphi\right] = r\varphi_r(z) \tag{54}$$

which is obtained by differentiating equation (53) with respect to r and

$$\sin\left[m(z) - \bar{\varphi}(z)\right] = -\frac{l(z)\cos m(z)}{\bar{r}(z)} \tag{55}$$

where c_{12} is given by $\bar{\varphi}(z)$ and $\bar{r}(z)$. In general, φ_z and φ_r are determined on c_{12} by

$$\frac{d\bar{\varphi}}{dz} = \frac{\partial\varphi}{\partial z} + \frac{\partial\varphi}{\partial r}\frac{d\bar{r}}{dz}$$

$$\frac{1}{r} w_\varphi = \frac{\partial\varphi}{\partial z} w_z + \frac{\partial\varphi}{\partial r} w_r$$

the latter condition being required in order to avoid reflected shock along c_{12}.

Beyond z_2, $l(z)$ and $m(z)$ may be chosen to give the suction surface the desired turning. These functions and their first derivatives are required to be continuous at $z = z_2$ as well as beyond. Thus $\frac{\partial^2\varphi}{\partial z^2} = g(z,r)$ may be prescribed, where $g(z,r)$ is determined from present experimental or theoretical knowledge of maximum blade turning before stalling. Differentiating equation (53) twice with respect to z and eliminating $\frac{\partial\varphi}{\partial z}$ and φ yield the relation 2400

$$\psi\left[l''(z),\ l'(z),\ l(z),\ m''(z),\ m'(z),\ m(z)\right] = 0 \tag{56}$$

Let

$$m(z) = Az^3 + Bz^2 + Cz + D$$

and from the boundary condition on $m(z)$ and $m'(z)$ at $z = z_2$ and a downstream curve $z = z_d$, the coefficients A,B,C,D are obtained. From equation (56), $l(z)$ is then obtained with boundary conditions at $z = z_2$.

In order to obtain the velocity components on Σ_3, it is first noted that on Σ_3 they must satisfy

$$w_\varphi = r\varphi_z w_z + r\varphi_r w_r \tag{57}$$

$$\frac{\partial w_r}{\partial z} - \frac{\partial w_z}{\partial r} + r\varphi_r\frac{\partial w_\varphi}{\partial z} - r\varphi_z\frac{\partial w_\varphi}{\partial r} - \varphi_z w_\varphi - 2\omega r\varphi_z = 0 \tag{58}$$

Equation (58) is a necessary and sufficient condition that there exists a function $\Phi(z,r)$ on Σ_3 which satisfies the first-order strip conditions. For Σ_1 such a condition follows automatically from the assumption of upstream irrotationality.

If the magnitude of the (relative) velocity on Σ_3 is then prescribed according to what would seem to be a desirable blade loading, then eliminating w_r and w_z among equations (57), (58), and $W^2 = w_r^2 + w_\varphi^2 + w_z^2$ yields an equation for w_φ of the form

$$\delta_1(r,z,w_\varphi,W)\ \frac{\partial}{\partial z}\ w_\varphi + \delta_2(r,z,w_\varphi,W)\ \frac{\partial}{\partial r}\ w_\varphi + \delta_3(r,z,w_\varphi,W) = 0 \tag{59}$$

In this equation,

2400

$$\delta_1(z,r,w_\varphi,W) = 2r^2\varphi_r\varphi_z\sigma^2 w_z$$

$$\delta_2(z,r,w_\varphi,W) = 2r^2\varphi_r\varphi_z\sigma^2 w_r$$

$$\delta_3(z,r,w_\varphi,W) = 2r\varphi_r r\varphi_z\sigma^2 w_z\ \frac{\partial w_\varphi}{\partial z} + 2r\varphi_r r\varphi_z\sigma^2 w_r\ \frac{\partial w_\varphi}{\partial r} + \left(r\varphi_z\ \frac{\partial\sigma_2^2}{\partial r}\right) w_z^2 +$$

$$\left(r\varphi_z\ \frac{\partial\sigma_1^2}{\partial r} + r\varphi_r\ \frac{\partial\sigma_3^2}{\partial z}\right) w_\varphi^2 + \left(r\varphi_r\ \frac{\partial\sigma_2^2}{\partial z}\right) w_r^2 - 2r\varphi_z\left\{\left[(r\varphi_r)^2\varphi_z + \frac{\partial r\varphi_z}{\partial r}\right] w_\varphi +\right.$$

$$\left.(r\varphi_r)^2 2\omega r\varphi_z\right\} w_z + 2r\varphi_r\left\{\left[(r\varphi_z)^2\varphi_z - \frac{\partial r\varphi_r}{\partial z}\right] w_\varphi + (r\varphi_z)^3 2\omega\right\} w_r -$$

$$r\varphi_z\ \frac{\partial}{\partial r}\ (r\varphi_r)^2\ W^2 - r\varphi_r\ \frac{\partial}{\partial z}\ (r\varphi_z)^2\ W^2$$

$$\sigma_2^2 = \sigma^2 - 1$$

The w_z and w_r appearing in the expressions on the right-hand sides are eliminated, respectively, by

$$\sigma_2^2 w_z^2 - 2r\varphi_z w_\varphi w_z + \sigma_1^2 w_\varphi^2 - (r\varphi_r)^2\ W^2 = 0 \tag{60}$$

$$\sigma_2^2 w_r^2 - 2r\varphi_r w_\varphi w_r + \sigma_3^2 w_\varphi^2 - (r\varphi_z)^2\ W^2 = 0 \tag{61}$$

Alternatively, w_φ(or v_θ) may be prescribed on Σ_3 according to a desirable loading. Then conditions (57) and (58) lead to

$$\frac{\varphi_z}{\varphi_r}\frac{\partial w_z}{\partial z} + \frac{\partial w_z}{\partial r} + \left(\frac{\varphi_{zz}}{\varphi_r} - \frac{\varphi_z\varphi_{rz}}{\varphi_r^2}\right) w_z$$

$$= -\varphi_z \frac{\partial rv_\theta}{\partial r} + \left(\varphi_r + \frac{1}{\varphi_r r^2}\right)\frac{\partial rv_\theta}{\partial z} + \frac{\omega r^2 - rv_\theta}{r^2\varphi_r^2}\varphi_{rz} \tag{62}$$

Equations (59) and (62) are solved with given w_φ and w_z, respectively, on c_{12}. In particular, a free vortex distribution may be prescribed at $z = z_d$.

Validity of Conditions Required in General Theory

In order to apply the general theory, condition (15) in particular must be verified. When the coefficients of equation (2) are taken to be those of equation (1), then

$$A_{14}^* = \frac{2r'}{r}\left[(r'w_\varphi - r\varphi' w_r)(r'w_z - z'w_r) - a^2 z' r\varphi'\right]$$

$$A_{12}^* = -\frac{r'}{r^2}\left[(r'w_\varphi - r\varphi' w_r)^2 - a^2\left((r')^2 + (r\varphi')^2\right)\right]$$

$$A_{24}^* = r'\left[(r'w_z - z'w_r)^2 - a^2\left((r')^2 + (z')^2\right)\right]$$

When the indicated algebra is carried out, the following expression is obtained:

$$A_{14}^{*2} + 4A_{12}^* A_{24}^* = \frac{4a^2(r')^4}{r^2}\left[T^2(W^2 - a^2) - (\overline{T}\cdot\overline{W})^2\right]$$

where $\overline{T} = (z', r\varphi', r')$. Thus, condition (15) becomes

$$T^2(W^2 - a^2) - (\overline{T}\cdot\overline{W})^2 > 0$$

which reduces to

$$\cos^2 (\overline{T},\overline{W}) < \cos^2 \theta \tag{63}$$

Since $0 < \theta < \pi/2$, the angle between $\overline{T}$ and $\overline{W}$ must be greater than θ, or the curve parametrized by t through a point on (Σ_1,Σ_3) must be outside the Mach cone with vertex at that point. This condition can always be satisfied by properly choosing the t curves. If, as in the formulation of the rotor problem, these curves are chosen to be z = constant curves, then the application of other conditions such as assuming radial leading edges may prevent difficulties.

2400

If conditions (16a) and (16b) are examined, it is seen that A_{12}^* and A_{24}^* are quadratic forms in $r\varphi',r'$ and z',r', respectively. For equation (1), they are definite quadratic forms if $w_\varphi^2 + w_r^2 > a^2$ and $w_z^2 + w_r^2 > a^2$, respectively. In the application developed herein, it is assumed that at least one of these inequalities holds at every point of (Σ_1,Σ_3). Roughly, far enough upstream in the rotor $w_\varphi > a$ and far enough downstream in the rotor $w_z > a$.

Furthermore, it must be shown that the surface (Σ_1,Σ_3) is nowhere tangent to a characteristic surface. A sufficient condition for this is that the Mach cone with vertex at each point of (Σ_1,Σ_3) cut (Σ_1,Σ_3), because if (Σ_1,Σ_3) were tangent to a characteristic surface at some point, it would have to be tangent to the Mach cone at that point. This condition is verified by showing that at each point the angle β_2 between the velocity vector and its component tangent to (Σ_1,Σ_3) is less than the Mach angle. This is obvious for Σ_3. For Σ_1 note that this condition is equivalent to

$$\frac{W_2^2}{a_2^2} \sin^2 \beta_2 < 1 \tag{64}$$

and that the relation

$$\frac{p_1}{p_2} = \gamma(1 - \mu^2) \frac{W_2^2}{a_2^2} \sin^2 \beta_2 - \mu^2 \tag{64a}$$

analogous to equation (47b) with $\frac{p_1}{p_2} < 1$ becomes equation (64).

Finally, in order to apply the general theory, the initial surface Σ has to be partially analytic with respect to r in every z interval. Clearly, (Σ_1,Σ_3) does not satisfy this requirement in intervals containing points of the curve of intersection of Σ_1 and Σ_3. Consequently, Σ is constructed from (Σ_1,Σ_3) by replacing (Σ_1,Σ_3) between z_1 and z_2 (cf. fig. 1) by a surface given by a third degree polynomial in z with coefficients functions of r such that it, as well as its first derivative with respect to z, matches the original surface on z_1 and z_2. The same thing is done for the function Φ. It is reasonable to assume that the preceding conditions are still valid. 2400

Integrands for Equations (44) and (45)

In solving for the uv derivatives from the linear equations (39) it is clear that f_α is obtained in terms of Ω_{12}, Ω_{24}, τ_1, τ_2, $\frac{\partial\Omega_{12}}{\partial u}$, $\frac{\partial\Omega_{12}}{\partial v}$, $\frac{\partial\Omega_{24}}{\partial u}$, $\frac{\partial\Omega_{24}}{\partial v}$, $\frac{\partial\tau_1}{\partial v}$, $\frac{\partial\tau_2}{\partial u}$, $E(\epsilon)$, $\frac{\partial E(\epsilon)}{\partial v}$, $\frac{\partial E(z)}{\partial u}$. These must be expressed in terms of y_α, $\frac{\partial y_\alpha}{\partial u}$, $\frac{\partial y_\alpha}{\partial v}$, and derivatives of y_α, $\frac{\partial y_\alpha}{\partial u}$, and $\frac{\partial y_\alpha}{\partial v}$ with respect to r for the integration.

Evaluating the a^{ij} as the coefficients in equation (1) gives

$$\Omega_{12} = -\frac{1}{r^2}\left[\left(\frac{1}{r}\Phi_\varphi - \omega r\right)^2 - a^2\right] + \frac{2}{r}\left(\frac{1}{r}\Phi_\varphi - \omega r\right)\Phi_r\frac{\partial\varphi}{\partial r} - \left(\Phi_r^2 - a^2\right)\left(\frac{\partial\varphi}{\partial r}\right)^2 \tag{65}$$

$$\Omega_{24} = \Phi_z^2 - a^2 - 2\,\Phi_r\Phi_z\frac{\partial z}{\partial r} + \left(\Phi_r^2 - a^2\right)\left(\frac{\partial z}{\partial r}\right)^2 \tag{66}$$

$$\frac{1}{2}\Omega_{14} = \left(\Phi_r^2 - a^2\right)\frac{\partial z}{\partial r}\frac{\partial\varphi}{\partial r} + \frac{1}{r}\left(\frac{1}{r}\Phi_\varphi - \omega r\right)\Phi_z - \frac{1}{r}\left(\frac{1}{r}\Phi_\varphi - \omega r\right)\Phi_r\frac{\partial z}{\partial r} - \Phi_r\Phi_z\frac{\partial\varphi}{\partial r} \tag{67}$$

On Σ, it will be more convenient to have these functions in terms of velocity components. Since now $\frac{\partial z}{\partial r} = 0$ they become

$$- r^2\Omega_{12} = \left[w_\varphi - r\varphi_r w_r \right]^2 - a^2 \left[1 + (r\varphi_r)^2 \right] \tag{65a}$$

$$\Omega_{24} = w_z^2 - a^2 \tag{66a}$$

$$\frac{r}{2}\Omega_{14} = w_z \left[w_\varphi - w_r(r\varphi_r) \right] \tag{67a}$$

In order to get the expressions needed for τ_1 and τ_2, these equations are substituted into

$$\tau_1 = \frac{\Omega_{14} + \sqrt{\Omega_{14}^2 + 4\Omega_{12}\Omega_{24}}}{2\Omega_{24}}, \quad \tau_2 = \frac{\Omega_{14} - \sqrt{\Omega_{14}^2 + 4\Omega_{12}\Omega_{24}}}{2\Omega_{24}}$$

Further, the derivatives of equations (65) and (66) with respect to u and v are required; for $\frac{\partial \tau_1}{\partial v}$ and $\frac{\partial \tau_2}{\partial u}$, these, as well as the derivatives of equation (67), are substituted into

$$\frac{\partial \tau_1}{\partial v} = \frac{\Omega_{24} \frac{\partial}{\partial v} \Omega_{14} - \Omega_{14} \frac{\partial}{\partial v} \Omega_{24}}{2\Omega_{24}^2} -$$

$$\frac{\Omega_{14}^2 \frac{\partial}{\partial v} \Omega_{24} - \Omega_{24}\Omega_{14} \frac{\partial}{\partial v} \Omega_{14} - 2\Omega_{24}^2 \frac{\partial}{\partial v} \Omega_{12} + 2\Omega_{12}\Omega_{24} \frac{\partial}{\partial v} \Omega_{24}}{2\Omega_{24}^2 \sqrt{\Omega_{14}^2 + 4\Omega_{12}\Omega_{24}}}$$

$$\frac{\partial \tau_2}{\partial u} = \frac{\Omega_{24} \frac{\partial}{\partial u} \Omega_{14} - \Omega_{14} \frac{\partial}{\partial u} \Omega_{24}}{2\Omega_{24}^2} +$$

$$\frac{\Omega_{14}^2 \frac{\partial}{\partial u} \Omega_{24} - \Omega_{24}\Omega_{14} \frac{\partial}{\partial u} \Omega_{14} - 2\Omega_{24}^2 \frac{\partial}{\partial u} \Omega_{12} + 2\Omega_{12}\Omega_{24} \frac{\partial}{\partial u} \Omega_{24}}{2\Omega_{24}^2 \sqrt{\Omega_{14}^2 + 4\Omega_{12}\Omega_{24}}}$$

For the $E(\epsilon)$,

$$E(z) = B(z) + \left[2\Phi_r\Phi_z - \left(\Phi_r^2 - a^2\right)\frac{\partial z}{\partial r}\right]\frac{\partial}{\partial r}\Phi_{zz} +$$

$$\left[2\,\frac{1}{r}\left(\frac{1}{r}\,\Phi_\varphi - \omega r\right)\Phi_r - \left(\Phi_r^2 - a^2\right)\frac{\partial\varphi}{\partial r}\right]\frac{\partial}{\partial r}\Phi_{z\varphi} + \left(\Phi_r^2 - a^2\right)\frac{\partial}{\partial r}\Phi_{zr} \tag{68}$$

$$E(\varphi) = B(\varphi) + \left[2\Phi_r\Phi_z - \left(\Phi_r^2 - a^2\right)\frac{\partial z}{\partial r}\right]\frac{\partial}{\partial r}\Phi_{z\varphi} +$$

$$\left[2\,\frac{1}{r}\left(\frac{1}{r}\,\Phi_\varphi - \omega r\right)\Phi_r - \left(\Phi_r^2 - a^2\right)\frac{\partial\varphi}{\partial r}\right]\frac{\partial}{\partial r}\Phi_{\varphi\varphi} + \left(\Phi_r^2 - a^2\right)\frac{\partial}{\partial r}\Phi_{\varphi r} \tag{69}$$

$$E(r) = B(r) + \left[2\Phi_r\Phi_z - \left(\Phi_r^2 - a^2\right)\frac{\partial z}{\partial r}\right]\frac{\partial}{\partial r}\Phi_{zr} +$$

$$\left[2\,\frac{1}{r}\left(\frac{1}{r}\,\Phi_\varphi - \omega r\right)\Phi_r - \left(\Phi_r^2 - a^2\right)\frac{\partial\varphi}{\partial r}\right]\frac{\partial}{\partial r}\Phi_{\varphi r} + \left(\Phi_r^2 - a^2\right)\frac{\partial}{\partial r}\Phi_{rr} \tag{70}$$

where $B(z)$, $B(\varphi)$, and $B(r)$ are obtained from equation (29) in which a_ϵ^{ij} and b_ϵ are given by the following:

$$a_z^{11} = 2\Phi_z\Phi_{zz} - 2aa_z \qquad a_z^{12} = \frac{\Phi_z}{r}\,\frac{\Phi_{\varphi z}}{r} + \frac{1}{r}\left(\frac{\Phi_\varphi}{r} - \omega r\right)\Phi_{zz}$$

$$a_z^{13} = \Phi_r\Phi_{zz} + \Phi_z\Phi_{rz} \qquad a_z^{22} = \frac{2}{r^2}\left(\frac{\Phi_\varphi}{r} - \omega r\right)\frac{\Phi_{\varphi z}}{r} - \frac{2}{r^2}\,aa_z$$

$$a_z^{23} = \frac{\Phi_r}{r}\,\frac{\Phi_{\varphi z}}{r} + \frac{1}{r}\left(\frac{\Phi_\varphi}{r} - \omega r\right)\Phi_{rz} \qquad a_z^{33} = 2\Phi_r\Phi_{rz} - 2aa_z$$

$$a_\varphi^{11} = 2\Phi_z\Phi_{z\varphi} - 2aa_\varphi \qquad a_\varphi^{12} = \frac{\Phi_z}{r}\,\frac{\Phi_{\varphi\varphi}}{r} + \frac{1}{r}\left(\frac{\Phi_\varphi}{r} - \omega r\right)\Phi_{z\varphi}$$

$$a_\varphi^{13} = \Phi_r\Phi_{z\varphi} + \Phi_z\Phi_{r\varphi} \qquad a_\varphi^{22} = \frac{2}{r^2}\left(\frac{\Phi_\varphi}{r} - \omega r\right)\Phi_{\varphi\varphi} - \frac{2}{r^2}\,aa_\varphi$$

$$a_\varphi^{23} = \frac{\Phi_r}{r}\,\frac{\Phi_{\varphi\varphi}}{r} + \frac{1}{r}\left(\frac{\Phi_\varphi}{r} - \omega r\right)\Phi_{r\varphi} \qquad a_\varphi^{33} = 2\Phi_r\Phi_{r\varphi} - 2aa_\varphi$$

2400

2400

$$a_r^{11} = 2\Phi_z\Phi_{zr} - 2aa_r \qquad a_r^{12} = \frac{1}{r}\left(\frac{\Phi_\varphi}{r} - \omega r\right)\Phi_{zr} + \frac{\Phi_z}{r^2}\left(\Phi_{\varphi r} - \frac{2\Phi_\varphi}{r}\right)$$

$$a_r^{13} = \Phi_r\Phi_{zr} + \Phi_z\Phi_{rr} \qquad a_r^{22} = \frac{2}{r^3}\left[\left(\Phi_{\varphi r} - \frac{2\Phi_\varphi}{r}\right)\left(\frac{\Phi_\varphi}{r} - \omega r\right)\right] - \frac{2aa_r}{r^2} + \frac{2a^2}{r^3}$$

$$a_r^{23} = \frac{1}{r}\left(\frac{\Phi_\varphi}{r} - \omega r\right)\Phi_{rr} + \frac{\Phi_r}{r^2}\left(\Phi_{\varphi r} - \frac{2\Phi_\varphi}{r}\right) \qquad a_r^{33} = 2\Phi_r\Phi_{rr} - 2aa_r .$$

$$b_z = -\frac{1}{r}\left[\left(\frac{\Phi_\varphi}{r}\right)^2 + a^2\right]\Phi_{rz} - \frac{\Phi_r}{r}\left(\frac{2\Phi_\varphi\Phi_{\varphi z}}{r^2} + 2aa_z\right)$$

$$b_\varphi = -\frac{1}{r}\left[\left(\frac{\Phi_\varphi}{r}\right)^2 + a^2\right]\Phi_{r\varphi} - \frac{\Phi_r}{r}\left(\frac{2\Phi_\varphi\Phi_{\varphi\varphi}}{r^2} + 2aa_\varphi\right)$$

$$b_r = -\frac{1}{r}\left[\left(\frac{\Phi_\varphi}{r}\right)^2 + a^2\right]\varphi_{rr} - \frac{\Phi_r}{r}\left(\frac{2\Phi_\varphi\Phi_{\varphi r}}{r^2} - \frac{3\Phi_\varphi^2}{r^3} + 2aa_r - \frac{a^2}{r}\right)$$

Again, as for the Ω_{ij} previously, on Σ it will be more convenient to have the $E(\epsilon)$ in terms of velocity components. Since again $\frac{\partial z}{\partial r} = 0$, they are

$$E(z) = 2w_rw_z\frac{\partial}{\partial r}\Phi_{zz} + \left[\frac{2}{r}w_\varphi w_r - (w_r^2 - a^2)\frac{\partial\varphi}{\partial r}\right]\frac{\partial}{\partial r}\Phi_{z\varphi} + (w_r^2 - a^2)\frac{\partial}{\partial r}\Phi_{zr} +$$

$$2\left\{w_z\Phi_{zz}^2 - aa_z\Phi_{zz} + \frac{1}{r}\left[w_\varphi\Phi_{zz}\Phi_{\varphi z} + w_z\frac{\Phi_{\varphi z}}{r}\Phi_{z\varphi}\right] + w_z\Phi_{rz}^2 + w_r\Phi_{zz}\Phi_{rz} + \right.$$

$$\left.\frac{1}{r^2}\left[w_\varphi\frac{\Phi_{\varphi z}}{r}\Phi_{\varphi\varphi} - aa_z\Phi_{\varphi\varphi}\right] + \frac{1}{r}\left[w_\varphi\Phi_{rz}\Phi_{r\varphi} + w_r\frac{\Phi_{\varphi z}\Phi_{r\varphi}}{r}\right] + w_r\Phi_{rz}\Phi_{rr} - aa_z\Phi_{rr}\right\} -$$

$$\frac{1}{r}\left[(w_\varphi + \omega r)^2 + a^2\right]\Phi_{rz} - \frac{2}{r}w_r\left[(w_\varphi + \omega r)\frac{\Phi_{\varphi z}}{r} + aa_z\right] \qquad (68a)$$

$$E(\varphi) = 2w_r w_z \frac{\partial}{\partial r}\Phi_{z\varphi} + \left[\frac{2}{r} w_\varphi w_r - (w_r^2 - a^2)\frac{\partial\varphi}{\partial r}\right]\frac{\partial}{\partial r}\Phi_{\varphi\varphi} + (w_r^2 - a^2)\frac{\partial}{\partial r}\Phi_{\varphi r} +$$

$$2\left\{w_z\Phi_{z\varphi}\Phi_{zz} - aa_\varphi\Phi_{zz} + \frac{1}{r}\left[w_z\frac{\Phi_{\varphi\varphi}}{r}\Phi_{z\varphi} + w_\varphi\frac{\Phi_{z\varphi}^2}{r}\right] + w_r\Phi_{z\varphi}\Phi_{zr} + w_z\Phi_{\varphi r}\Phi_{zr} + \right.$$

$$\left.\frac{1}{r^2}\left[w_\varphi\Phi_{\varphi\varphi}^2 - aa_\varphi\Phi_{\varphi\varphi}\right] + \frac{1}{r}\left[w_r\frac{\Phi_{\varphi\varphi}}{r}\Phi_{\varphi r} + w_\varphi\Phi_{\varphi r}^2\right] + w_r\Phi_{\varphi r}\Phi_{rr} - aa_\varphi\Phi_{rr}\right\} -$$

$$\frac{1}{r}\left[(w_\varphi + \omega r)^2 + a^2\right]\Phi_{r\varphi} - \frac{2w_r}{r}\left[(w_\varphi + \omega r)\frac{\Phi_{\varphi\varphi}}{r} + aa_\varphi\right] \tag{68b}$$

$$E(r) = 2w_r w_z \frac{\partial}{\partial r}\Phi_{zr} + \left[\frac{2}{r} w_\varphi w_r - (w_r^2 - a^2)\frac{\partial\varphi}{\partial r}\right]\frac{\partial}{\partial r}\Phi_{\varphi r} + (w_r^2 - a^2)\frac{\partial}{\partial r}\Phi_{rr} +$$

$$2\left\{w_z\Phi_{zr}\Phi_{zz} - aa_r\Phi_{zz} + \frac{1}{r}\left[w_\varphi\Phi_{zr}\Phi_{z\varphi} + w_z\frac{\Phi_{\varphi r}}{r}\Phi_{z\varphi} - 2w_z\frac{w_\varphi + \omega r}{r}\Phi_{z\varphi}\right] + \right.$$

$$w_r\Phi_{zr}^2 + w_z\Phi_{rr}\Phi_{zr} + \frac{1}{r^2}\left[w_\varphi\frac{\Phi_{\varphi r} - 2(w_\varphi + \omega r)}{r}\Phi_{\varphi\varphi} - aa_r\Phi_{\varphi\varphi} + \frac{a^2}{r}\Phi_{\varphi\varphi}\right] +$$

$$\left.\frac{1}{r}\left[w_\varphi\Phi_{rr}\Phi_{\varphi r} + w_r\frac{\Phi_{\varphi r} - 2(w_\varphi + \omega r)}{r}\Phi_{\varphi r}\right] + w_r\Phi_{rr}^2 - aa_r\Phi_{rr}\right\} -$$

$$\frac{1}{r}\left[(w_\varphi + \omega r)^2 + a^2\right]\Phi_{rr} - \frac{w_r}{r}\left[2(w_\varphi + \omega r)\frac{\Phi_{\varphi r}}{r} - 3\frac{(w_\varphi + \omega r)^2}{r} + 2aa_r - \frac{a^2}{r}\right] \tag{68c}$$

Finally, the derivatives of equations (68) to (70) with respect to v and of equation (68) with respect to u are required.

In all these expressions, a and its first derivatives are obtained from

$$a^2 = \frac{\gamma-1}{2}\left[2I + (r\omega)^2 - W^2\right] = (\gamma-1)I + \frac{\gamma-1}{2}\left(2\omega\,\Phi_\varphi - \Phi_z^2 - \frac{1}{r^2}\Phi_\varphi^2 - \Phi_r^2\right)$$

CONCLUDING REMARKS

A method has been presented by means of which a detailed numerical description of many types of fluid flows in turbomachines can be obtained. The method is applied to one particular type described to the point where a solution is obtained merely by substitution of numerical values in the given equations. Once the algebra needed to obtain such equations has been done for any problem, the work involved in getting numerical results is not expected to be prohibitive, particularly in view of the fact that it largely consists of iterated integration, which type of calculation is well suited to rapid execution on high-speed computing machines.

Lewis Flight Propulsion Laboratory
National Advisory Committee for Aeronautics
Cleveland, Ohio, February 12, 1952

APPENDIX - SYMBOLS

The following symbols are used in this report:

A,B,C,D constants in equation for $m(z)$

A_{ij}, A^{φ}_{ij}, A^{z}_{ij}, A^{*}_{ij}, A^{u}_{ij}, A^{v}_{ij} fourth-order minors obtained from the first four rows of equation (10)

A^{ij} coefficients in velocity transformation

a sound velocity

$$\begin{pmatrix} a^{11} & a^{12} & a^{13} \\ a^{21} & a^{22} & a^{23} \\ a^{31} & a^{32} & a^{33} \end{pmatrix} = \begin{pmatrix} \Phi_z^2 - a^2 & \frac{1}{r}\left(\frac{\Phi_\varphi}{r} - \omega r\right)\Phi_z & \Phi_r\,\Phi_z \\ \frac{1}{r}\left(\frac{\Phi_\varphi}{r} - \omega r\right)\Phi_z & \frac{1}{r^2}\left[\left(\frac{\Phi_\varphi}{r} - \omega r\right)^2 - a^2\right] & \frac{1}{r}\left(\frac{\Phi_\varphi}{r} - \omega r\right)\Phi_r \\ \Phi_r\,\Phi_z & \frac{1}{r}\left(\frac{\Phi_\varphi}{r} - \omega r\right)\Phi_r & \Phi_r^2 - a^2 \end{pmatrix}$$

B^{ij} coefficients in velocity transformation

$$B(\epsilon) = a^{11}_{\epsilon}\Phi_{zz} + 2a^{12}_{\epsilon}\Phi_{z\varphi} + 2a^{13}_{\epsilon}\Phi_{zr} + a^{22}_{\epsilon}\Phi_{\varphi\varphi} + 2a^{23}_{\epsilon}\Phi_{\varphi r} + a^{33}_{\epsilon}\Phi_{rr} + b_{\epsilon}$$

$$b \qquad -\frac{1}{r}\left[\left(\frac{\Phi_\varphi}{r}\right)^2 + a^2\right]\Phi_r$$

C_i constants $i = 1, \ldots, 9$

c_{12} intersection of Σ_1 and Σ_2

c_{34} trailing edge

$$c_* \qquad \mu\left[2I + (\omega r)^2\right]^{\frac{1}{2}}$$

$D_{i\alpha}$ coefficients in equation (39)

$$E(\epsilon) = -\left[a^{33}z_r - 2a^{13}\right]\frac{\partial}{\partial r}\Phi_{z\epsilon} - \left[a^{33}\varphi_r - 2a^{23}\right]\frac{\partial}{\partial r}\Phi_{\varphi\epsilon} + a^{33}\frac{\partial}{\partial r}\Phi_{r\epsilon} + B(\epsilon)$$

$$\epsilon = z, \varphi, r$$

$F(\xi,\eta)$ Legendre transformation of $\varphi(z,r)$ in equation (49)

2400

f_i integrands in solution of equivalent problem

G_i coefficients in equation (39)

$g(z,r)$ given turning on Σ_3

H total enthalpy

h static enthalpy

I $h + \frac{1}{2}W^2 - \frac{1}{2}\omega^2 r^2$

K $e^{-\frac{\Delta S}{c_p}}$

K_i constants, $i = 1, 2$

$L(\xi)$ arbitrary function in equation (51)

$l(z)$ intercept on $\varphi = \pi/2$ of generator of Σ_3

M Mach number

$m(z)$ angle with $\varphi = 0$ of generator of Σ_3

$N(\xi,\eta)$ integrand in equation (51)

p static pressure

r coordinate in cylindrical system

S entropy

s parameter on a surface

T magnitude of tangent vector

t parameter on a curve

2400

u,v	transformed coordinates
v_θ	$w_\varphi + \omega r$
W	magnitude of relative velocity
w	parameter on a surface
w_z,w_φ,w_r	components of relative velocity
z	coordinate in cylindrical system
α	angle between velocity vector and normal to Σ
β	complement of α
Γ_i	submatrices of $D_{i\alpha}$
γ	ratio of specific heats
$\delta_i(z,r,w_\varphi,W)$	coefficients in equation (59)
ϵ	an index denoting z, φ, or r
ζ,η	independent variables of Legendre transformation
θ	Mach angle
λ	a function of entropy change across shock
μ	$\sqrt{\frac{\gamma-1}{\gamma+1}}$
ξ	a root of equation (47c)
ρ_i	roots of quadratic equation, $i = 1, 2$
Σ	initial surface
Σ_1	shock surface
Σ_2	suction surface ahead of shock surface
Σ_3	suction surface behind shock surface

$$\sigma^2 = (r\varphi_z)^2 + 1 + (r\varphi_r)^2$$

$$\sigma_1^2 = \sigma^2 - (r\varphi_z)^2 \qquad \sigma_2^2 = \sigma^2 - 1 \qquad \sigma_3^2 = \sigma^2 - (r\varphi_r)^2$$

$$\bar{\sigma}_1^2 = \frac{\sigma^2}{1-\mu^2} - (r\varphi_z)^2$$

2400

$$\bar{\sigma}_2^2 = \frac{\sigma^2}{1-\mu^2} - 1$$

$$\bar{\sigma}_3^2 = \frac{\sigma^2}{1-\mu^2} - (r\varphi_r)^2$$

τ_i roots of quadratic equation

Φ velocity potential

φ coordinate in cylindrical system

ψ function in equation (56)

ω angular velocity of wheel

Ω_{12} $- \left[a^{22} - 2a^{32}\varphi_r + a^{33}\varphi_r^2\right]$

Ω_{24} $a^{11} - 2a^{13}z_r + a^{33}z_r^2$

$\frac{1}{2}\Omega_{14}$ $a^{12} - a^{13}\varphi_r - a^{23}z_r + a^{33}\varphi_r z_r$

Subscripts:

d downstream

ij omitted columns in expansion of equation (10)

N velocity component normal to shock

TZ component tangent to shock in z = constant surface

TR component tangent to shock in r = constant surface

1 ahead of shock surface

2 behind shock surface

Superscripts:

ij distinguish coefficients in velocity transformations (52a) and (52b)

(ν) the νth approximation

' derivative with respect to t

2400

REFERENCES

1. Tyler, R. A.: The Available Theoretical Analysis of Two-Dimensional Cascade Flow. Aero. Note AN-4, Div. Mech. Eng., Nat. Res. Council Canada, 1949. Ottawa, May 1948.

2. Marble, Frank E.: The Flow of a Perfect Fluid through an Axial Turbomachine with Prescribed Blade Loading. Jour. Aero. Sci., vol. 15, no. 8, Aug. 1948, pp. 473-485.

3. Goldstein, Arthur W.: Axisymmetric Supersonic Flow in Rotating Impellers. TN 2388, 1951.

4. Wu, Chung-Hua, and Brown, Curtis A.: A Method of Designing Turbomachine Blades with a Desirable Thickness Distribution for Compressible Flow Along an Arbitrary Stream Filament of Revolution. NACA TN 2455, 1951.

5. Wu, Chung-Hua, and Brown, Curtis A.: Method of Analysis for Compressible Flow Past Arbitrary Turbomachine Blades on General Surface of Revolution. TN 2407, 1951.

6. Stanitz, J. D.: Some Theoretical Aerodynamic Investigations of Impellers in Radial- and Mixed-Flow Centrifugal Compressors. A.S.M.E. Preprint No. 51-F-13, 1951.

7. Reissner, Hans: Blade Systems of Circular Arrangement in Steady, Compressible Flow. Courant Anniversary Volume, Interscience Pub., Inc., 1948, pp. 307-327.

8. Meyer, Richard: Beitrag zur Theorie feststehender Schaufelgitter. Nr. 11, Mitteilungen aus Inst. f. Aero. (Zürich), 1946.

9. Wu, Chung-Hua: A General Theory of Three-Dimensional Flow in Subsonic and Supersonic Turbomachines of Axial-, Radial-, and Mixed-Flow Types. NACA TN 2604, 1952.

10. Titt, Edwin W.: An Initial Value Problem for All Hyperbolic Partial Differential Equations of Second Order with Three Independent Variables. Annals of Mathematics, vol. 40, no. 4, Oct. 1939, pp. 862-891.

11. Courant, R., und Hilbert, D.: Methoden der Mathematischen Physik. II. Julius Springer (Berlin), 1937.

12. Courant, R., and Friedrichs, K. O.: Supersonic Flow and Shock Waves. Interscience Pub., Inc., 1948.

13. Jones, Robert T.: Wing Plan Forms for High-Speed Flight. NACA Rep. 863, 1947. (Formerly NACA TN 1033.)

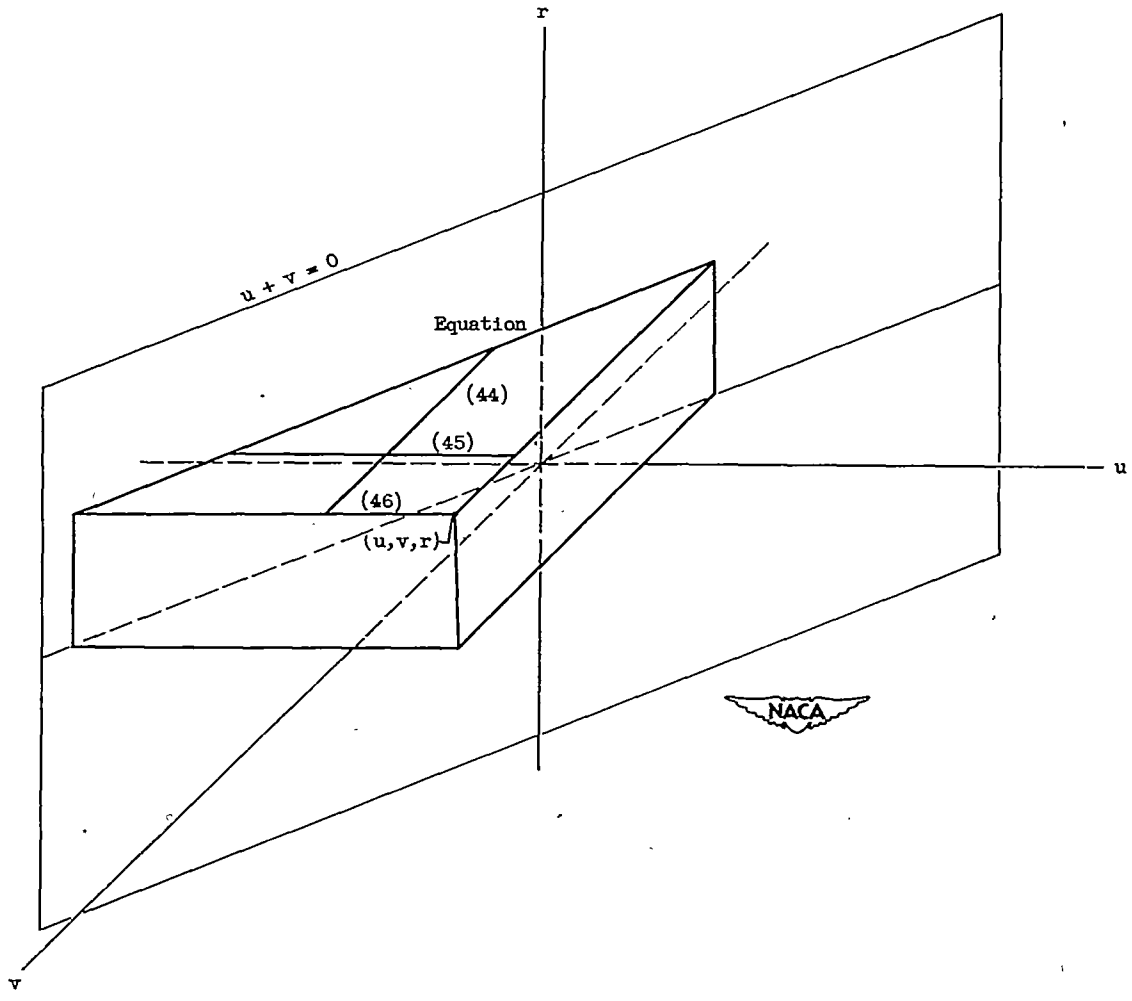

Figure 1. - Paths of integration.

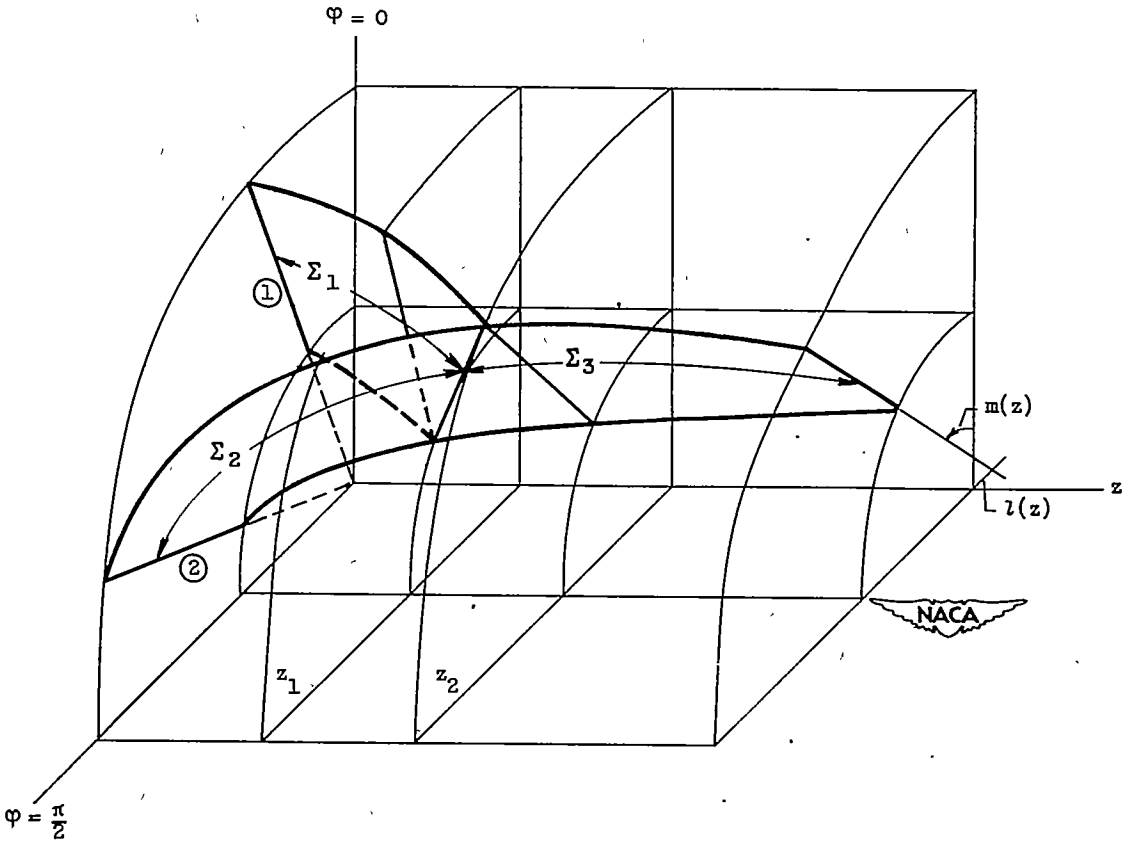

Figure 2. - Shock and suction surfaces.

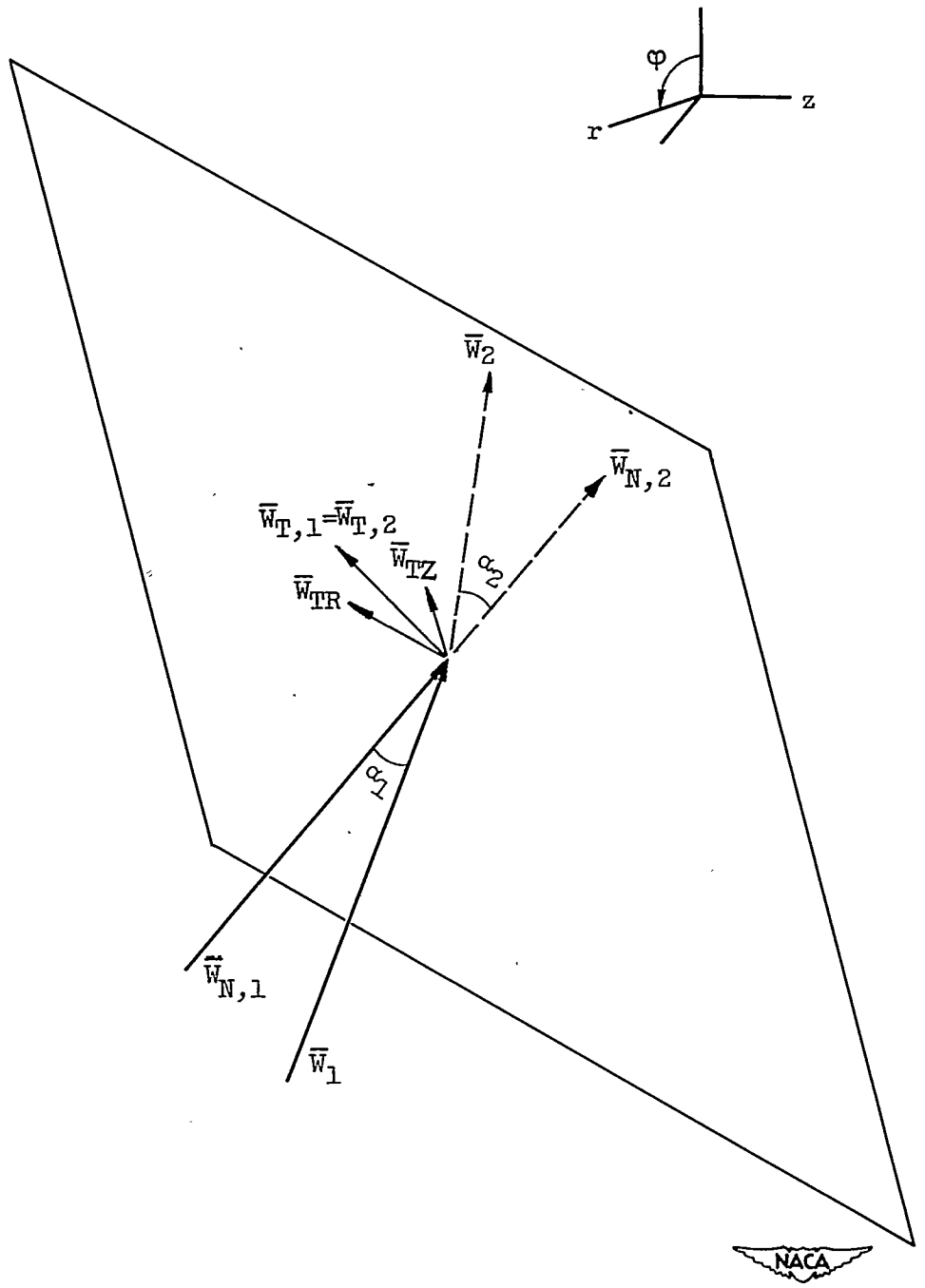

Figure 3. - Velocities at a point of shock surface.

NACA-Langley - 6-3-52 - 1000