NACA TN 2744
9107

TECH LIBRARY KAFB, NM
0065906

NATIONAL ADVISORY COMMITTEE FOR AERONAUTICS

TECHNICAL NOTE 2744

PRACTICAL CALCULATION OF SECOND-ORDER SUPERSONIC FLOW PAST NONLIFTING BODIES OF REVOLUTION

By Milton D. Van Dyke

Ames Aeronautical Laboratory
Moffett Field, Calif.

Washington
July 1952

AFMDC
TECHNICAL LIBRARY
AFL 2811

AFMDC
TECHNICAL

TECH LIBRARY KAFB, NM

0065906

R

NATIONAL ADVISORY COMMITTEE FOR AERONAUTICS

TECHNICAL NOTE 2744

PRACTICAL CALCULATION OF SECOND-ORDER SUPERSONIC FLOW PAST NONLIFTING BODIES OF REVOLUTION

By Milton D. Van Dyke

SUMMARY

Calculation of second-order supersonic flow past bodies of revolution at zero angle of attack is described in detail, and reduced to routine computation. Use of an approximate tangency condition is shown to increase the accuracy for bodies with corners. Tables of basic functions and standard computing forms are presented. The procedure is summarized so that one can apply it without necessarily understanding the details of the theory. A sample calculation is given, and several examples are compared with solutions calculated by the method of characteristics.

INTRODUCTION

For predicting the pressure distribution over a nonlifting body of revolution in supersonic flow, linearized theory is often found to be inadequate. In the past, greater accuracy could be achieved only by resorting to the laborious method of characteristics. Recently, however, a second-order solution has been found which within its range of applicability yields greater accuracy than linearized theory, while requiring considerably less labor than the method of characteristics.

The present paper aims to give a complete description of the second-order method, and to reduce it to routine computation. Previously published descriptions of the procedure, which are inadequate in some respects, are revised. Shortcuts in the computing scheme are pointed out. Extensive tables of the required basic solutions are presented, to be used in conjunction with standard computing forms. Several examples illustrate the procedure.

The reader interested only in calculating the second-order solution for a definite body, without necessarily understanding the details of

the theory, can turn directly to the final section Practical Use of Method on page 26.

NOTATION

a, b, c d, e, f	functions of t associated with linear and quadratic source solutions
g, h, i, j k, l, m	functions of t associated with step, corner, and curvature solutions
C_p	pressure coefficient
E	complete elliptic integral of second kind with modulus $k = \sqrt{(1-t)/(1+t)}$
G_o	function associated with determination of first interval
G_1	function associated with determination of subsequent intervals
K	complete elliptic integral of first kind with modulus $k = \sqrt{(1-t)/(1+t)}$
M	free-stream Mach number
N	$\frac{\gamma+1}{2} \frac{M^2}{\beta^2}$
P_n	nth point on surface of body
q	resultant velocity
r	radial coordinate
R	local radius of body
S(x)	source strength distribution function
t	conical variable $\left(\frac{\beta r}{x}\right)$

u	axial velocity component
v	radial velocity component
x	axial coordinate
β	$\sqrt{M^2 - 1}$
γ	adiabatic exponent of gas
δ_n	length of interval between points P_n and P_{n+1}
φ	first-order (linearized) perturbation potential
$\varphi^{(m)}$	basic first-order solution homogeneous of order m
ϕ	second-order perturbation potential
Φ	exact perturbation potential
χ	complementary function for second-order solution
ψ	particular integral for second-order solution

Superscripts

(1)	first-order value
(2)	second-order value
$'$	differentiation with respect to x

Subscripts

o	value at tip of pointed body
n	value at nth point on body, P_n
c	value at corner

DETAILS OF SECOND-ORDER SOLUTION

The natural way of attempting to improve a first-order (linearized) solution is by iteration. For nonlifting bodies of revolution, the second-order iteration equation was solved in principle in 1949 by the discovery of a particular integral expressed in terms of the first-order solution (reference 1). This reduces the second-order problem to the form of the first-order problem. For supersonic speeds, both problems can then be solved by suitable modification of the method of Kármán and Moore (reference 2). The result is the axially symmetric counterpart of Busemann's second-order solution for plane supersonic flow (reference 3), to which it reduces locally at a corner.

As a preliminary to describing this procedure in detail, the reduction of the second-order problem will be summarized. Further details will be found in references 1 and 4.

Reduction of Second-Order Problem to Two First-Order Problems

At moderate supersonic speeds, the flow past a reasonably slender body of revolution is nearly isentropic and therefore nearly irrotational. To this approximation, there exists a perturbation potential Φ whose derivatives give the velocity perturbations (referred to the velocity U of the free stream), so that

$$\left.\begin{aligned} \frac{u}{U} &= 1 + \Phi_x \\ \frac{v}{U} &= \Phi_r \end{aligned}\right\} \tag{1}$$

Here subscripts indicate differentiation, and the notation is explained by sketch (a). The equations of motion for a polytropic gas combine into the single equation

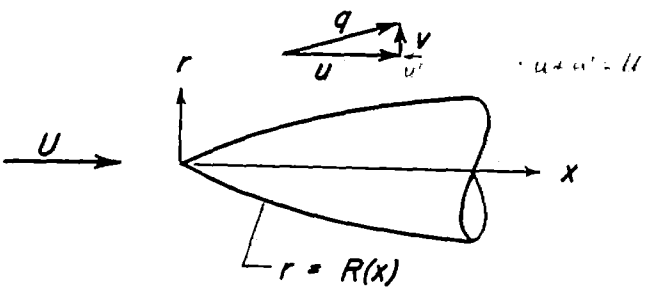

Sketch (a)

in cylinder coordinates:

$$\left.\begin{aligned} \Phi_{rr} + \frac{\Phi_r}{r} - \beta^2\Phi_{xx} &= M^2\left[\begin{matrix} 2(N-1)\beta^2\Phi_x\Phi_{xx} + 2\Phi_r\Phi_{xr} + \\ \Phi_r{}^2\Phi_{rr} + \text{other cubic terms} \end{matrix}\right] \\ \text{where} \\ \beta^2 &= M^2 - 1 \\ N &= \frac{\gamma+1}{2}\frac{M^2}{\beta^2} \end{aligned}\right\} \tag{2}$$

Here all linear terms have been grouped on the left and quadratic and cubic terms on the right. The only cubic term which gives a second-order contribution is the one involving $\Phi_r{}^2\Phi_{rr}$.

This equation must be solved subject to the boundary conditions that all disturbances vanish ahead of the body, and that the flow is tangent to the surface of the body.

Iteration procedure.- The equation of motion (2) cannot be solved directly because it is nonlinear. Therefore a method of successive approximations is adopted - the so-called Prandtl-Busemann iteration procedure.

In the first approximation, the nonlinear right-hand side of equation (2) is neglected altogether. Hence the first-order perturbation potential φ satisfies the familiar wave equation of linearized supersonic theory:

$$\varphi_{rr} + \frac{\varphi_r}{r} - \beta^2\varphi_{xx} = 0 \tag{3}$$

In the second approximation, the right-hand side of equation (2) is no longer entirely neglected but is evaluated approximately in terms of the previously determined first-order solution. Hence the second-order perturbation potential ϕ satisfies the nonhomogeneous wave equation

$$\phi_{rr} + \frac{\phi_r}{r} - \beta^2\phi_{xx} = M^2[2(N-1)\beta^2\varphi_x\varphi_{xx} + 2\varphi_r\varphi_{xr} + \varphi_r{}^2\varphi_{rr}] \tag{4}$$

Here ϕ will be taken to be the complete second-order perturbation potential, rather than a correction to the first-order solution.

This procedure could be continued to third and higher approximations, subject to the limitation that at some stage the effects of

entropy variations, which were ignored in assuming potential flow, would exceed the remainder in the iteration procedure. For slender bodies at moderate Mach numbers, Lighthill has shown (reference 5) that this limit is reached only in the sixth approximation. For practical purposes, however, only the first two steps appear to be useful.

Particular integral.- Solution of the second-order problem is greatly simplified by the discovery that a particular integral ψ of the iteration equation (4) is given in terms of the first-order solution by

$$\psi = M^2 \left[\varphi_x(\varphi+Nr\varphi_r) - \frac{1}{4} r\varphi_r^3\right] \tag{5a}$$

so that

$$\left.\begin{aligned} \psi_x &= M^2 \left[\varphi_{xx}(\varphi+Nr\varphi_r)+\varphi_x(\varphi_x+Nr\varphi_{xr}) - \frac{3}{4} r\varphi_{xr}\varphi_r^2\right] \\ \psi_r &= M^2 \left\{\varphi_{xr}(\varphi+Nr\varphi_r)+\varphi_x\left[(N+1)\varphi_r+Nr\varphi_{rr}\right] - \frac{1}{4}\varphi_r^2(\varphi_r+3r\varphi_{rr})\right\} \end{aligned}\right\} \tag{5b}$$

This reduces the second-order problem to the form of the first-order problem, because the nonhomogeneous iteration equation (4) is reduced to the homogeneous equation (3) of first-order theory. The complete second-order potential consists of the particular integral plus a complementary function χ which is required to re-establish the boundary conditions:

$$\phi = \psi + \chi \tag{6}$$

and χ is a solution of the first-order equation (3). Thus the remaining problem for χ differs from that for the first-order potential φ only in that the tangency condition is more complicated. Methods for solving first-order problems are well established, so that in principle the second-order problem is solved. In practice, however, various details require careful consideration, to which the subsequent discussion is devoted.

Tangency Condition

Because approximations were made in the equation of motion, one would anticipate that a corresponding approximation is permissible in the condition of tangent flow at the body. Such an approximation can be made, and it can be shown that the mathematical order of the error is not thereby increased. This suggests that it is immaterial whether or not the approximation is adopted. However, numerical examples show that the

approximation has in some cases a large effect upon the solution, so that the choice of tangency condition must be carefully considered.[1]

Exact and approximate tangency conditions.- If the body is defined by $r = R(x)$, the exact tangency condition for the original problem of equation (2) is

$$\frac{\partial \Phi}{\partial x} - \frac{v}{u} = \frac{\phi_r}{1+\phi_x} \qquad \Phi_r = R'(1+\Phi_x) \qquad \text{at} \quad r = R(x) \tag{7}$$

where the prime indicates differentiation with respect to x. The corresponding exact tangency conditions for the first- and second-order problems of equations (3) and (4) are

$$\varphi_r = R'(1+\varphi_x) \qquad \text{at} \quad r = R(x) \tag{8}$$

and

$$\phi_r = R'(1+\phi_x) \qquad \text{at} \quad r = R(x) \tag{9}$$

exact

Now in equation (8) it is consistent with the approximations of the first-order theory to neglect the small quantity φ_x in comparison with unity. Thus the approximate first-order tangency condition becomes

$$\varphi_r = R' \qquad \text{at} \quad r = R(x) \tag{10}$$

Similarly, in equation (9) the term ϕ_x can be replaced by its first-order counterpart. Thus the approximate second-order tangency condition becomes

$$\phi_r = R'(1+\varphi_x) \qquad \text{at} \quad r = R(x) \tag{11a}$$

appr.

or, separating the second-order term into particular integral and complementary function according to equation (6) and collecting known quantities on the right-hand side,

$$\chi_r = R'(1+\varphi_x) - \psi_r \qquad \text{at} \quad r = R(x) \tag{11b}$$

Smooth bodies.- For bodies without corners, the choice of tangency condition has no consistent effect upon the error in surface velocity. Greater accuracy in the second-order solution results from using the exact tangency condition in some cases, but the approximate condition

[1] The magnitude of this effect was brought to the author's attention by John Huth and E. P. Williams of the Rand Corporation.

in others.[2] For example, the exact condition leads to greater accuracy for cones, as shown in sketch (b). This superiority, of course, arises at the tip of any pointed body and persists for some distance downstream. On the other hand, the approximate tangency condition leads to greater accuracy for the boattail following a long cylinder shown in sketch (c), for which the exact solution has been determined by the

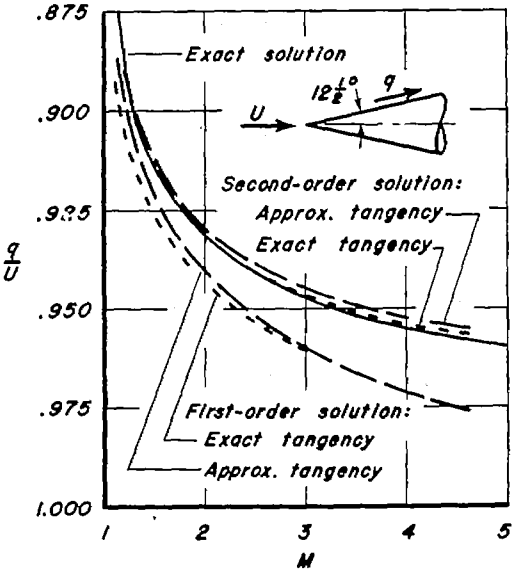

Sketch (b)

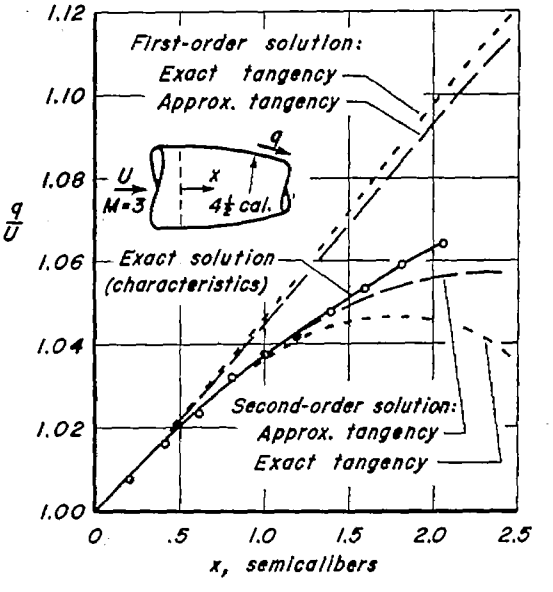

Sketch (c)

method of characteristics. Thus the conclusion, based upon estimates of the order of error, that neither tangency condition is consistently more accurate, is confirmed empirically for smooth bodies.

Bodies with corners.- In plane flow, the approximate tangency condition invariably leads to more accurate first- and second-order velocities than the exact condition. The superiority of the approximate tangency condition is most pronounced for expansions, and becomes greater as the Mach number falls toward unity.

At a corner on a body of revolution the flow is locally two-dimensional. Therefore the approximate tangency condition is, at least locally, consistently superior to the exact condition for both the

[2]In the first-order solution, however, the approximate tangency condition seems invariably to yield greater accuracy.

first- and second-order solutions. This is shown in sketch (d) for the velocity just behind the corner of a conical boattail which follows a very long circular cylinder. (The exact solution is, of course, given by a plane Prandtl-Meyer expansion.) At moderate Mach numbers, the superiority of the approximate tangency condition is of considerable practical importance in the second-order solution. The superiority is not confined to the immediate vicinity of the corner, but persists far downstream. This is illustrated in sketch (e) by comparison with the solution for a conical boattail calculated by the method of characteristics. (For clarity, the first-order solutions are only partially shown.)

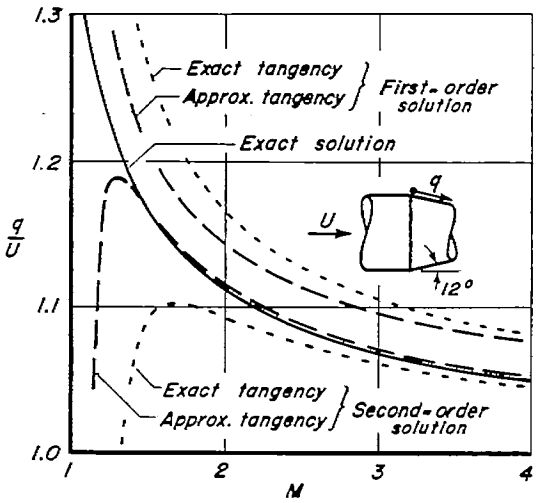

Sketch (d)

Sketch (d) suggests that the large discrepancy associated with the choice of tangency condition is in some sense a transonic phenomenon. This is confirmed by examination of the expressions for the streamwise velocity just behind the corner. For expansion through an angle whose tangent is ϵ, the second-order solution using the exact tangency condition is

$$\frac{u}{U} = 1 + \frac{\epsilon}{\beta-\epsilon} - \frac{\gamma+1}{4}\frac{M^4}{\beta}\frac{\epsilon^2}{(\beta-\epsilon)^3} \tag{12a}$$

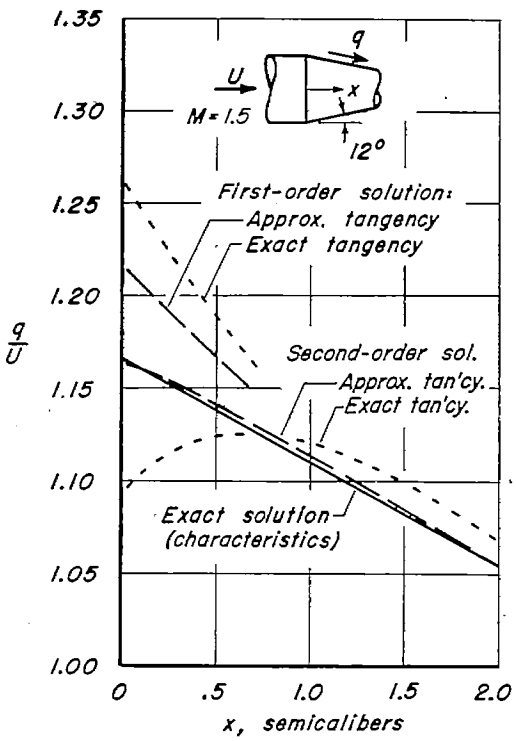

Sketch (e)

whereas the second-order solution using the approximate tangency condition is

$$\frac{u}{U} = 1 + \frac{\epsilon}{\beta} + \frac{\epsilon^2}{\beta^2} - \frac{\gamma+1}{4}\frac{M^4}{\beta^4}\epsilon^2 \tag{12b}$$

The difference between these two results is clearly of order ϵ^3 and hence of third order in the usual sense, according to which linearized theory gives the first approximation. However, in the transonic range (where β is of order $\epsilon^{1/3}$ for small disturbances) the main term in the difference is

$$\frac{\Delta u}{U} \sim \frac{3(\gamma+1)}{4}\frac{M^4}{\beta^5}\epsilon^3 \tag{12c}$$

which is small only of order $\epsilon^{4/3}$. Since u/U itself is of order $\epsilon^{2/3}$ in the transonic range, it is seen that the discrepancy has grown to be of second order in the sense of transonic small-disturbance theory. This is simply another example of the fact, which plagues all users of transonic small-disturbance theory, that higher-order effects are greater in the transonic range than at other speeds.

Choice of tangency condition.- It has been seen that although for smooth bodies neither tangency condition can be preferred, for bodies with corners the approximate condition is consistently superior to the exact condition in both first and second order. Consequently, the approximate tangency condition (equations (10) and (11)) is adopted for use henceforth.[3]

The approximate tangency condition has several minor additional advantages. As might be expected, the computing procedure is simplified. For example, the second-order velocities on the surface of a cone, which could not conveniently be written in explicit form in reference 1 (where the exact tangency condition was used) are not unduly complicated if the approximate condition is used. The result is that

[3]All numerical examples given in references 1 and 4 were calculated using the exact tangency condition, and will therefore not agree precisely with results from the present computing scheme. It should also be noted that the solution presented in references 1 and 4 for the 3-1/2-caliber-long ogive at $M = 3.24$ is inaccurate near the nose because linear rather than quadratic source solutions were used for calculating the complementary function X, which results in appreciable error where the body slope is nearly that of the Mach cone.

at the surface of a cone of semivertex angle $\tan^{-1}\epsilon$

$$\frac{u}{U} = 1 - \epsilon^2 \frac{\operatorname{sech}^{-1}T}{\sqrt{1-T^2}} + \epsilon^4\left(\frac{\operatorname{sech}^{-1}T}{\sqrt{1-T^2}}\right)^2 +$$

$$\frac{M^2\epsilon^4}{1-T^2}\left[-(\operatorname{sech}^{-1}T)^2 + \frac{10+T^2}{4}\frac{\operatorname{sech}^{-1}T}{\sqrt{1-T^2}} - \left(N+\frac{7}{4}\right) + (N-1)T^2\left(\frac{\operatorname{sech}^{-1}T}{\sqrt{1-T^2}}\right)^2\right] \quad (13a)$$

$$\frac{v}{U} = \epsilon\left(1 - \epsilon^2\frac{\operatorname{sech}^{-1}T}{\sqrt{1-T^2}}\right) \quad (13b)$$

where $T = \beta\epsilon$.

Another advantage is that with the approximate tangency condition the first-order solution exactly satisfies the supersonic similarity rule (the supersonic counterpart of the Göthert rule, reference 6).

Pressure Relation

After the velocity components are determined, the pressure coefficient is given by

$$C_p = \frac{2}{\gamma M^2}\left[\left\{1 + \frac{\gamma-1}{2}M^2\left[1 - (1+\Phi_x)^2 - \Phi_r^2\right]\right\}^{\frac{\gamma}{\gamma-1}} - 1\right] \quad (14)$$

It was shown in reference 4 that approximating this expression by the leading terms of its series expansion cannot generally be justified, and numerical examples show that such expansion leads to unnecessary loss of accuracy, particularly in the second-order solution (references 1 and 4). Therefore the complete pressure relation of equation (14) is used in the present computing scheme.

Basic Solutions of First-Order Equation

It has been seen that discovery of a particular integral reduces the second-order problem to a sequence of two first-order problems. These are best solved by repeated superposition of five basic solutions, which are derived and tabulated below.

Any first-order solution may be regarded as resulting from a continuous distribution of supersonic sources along the axis of the body.

(See, for example, reference 2 or 7.) A source distribution of local strength $S(x)$ per unit length yields a first-order perturbation potential given by

$$\varphi(x,r) = -\int_{-\infty}^{x-\beta r} \frac{S(\xi)\,d\xi}{\sqrt{(x-\xi)^2-\beta^2 r^2}} \qquad (15)$$

Therefore the first-order problem consists simply in determining the source-distribution function $S(x)$ which produces the desired shape. However, substituting this expression into the tangency condition yields an integral equation which cannot be solved exactly.

The Kármán-Moore procedure for obtaining an approximate numerical solution involves the assumption that the unknown source function $S(x)$ can be replaced by a broken line, as indicated in sketch (f). Another

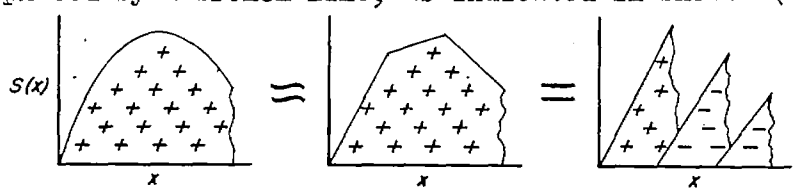

Sketch (f)

(quite equivalent) viewpoint is that the function is approximated by the sum of a number of linear source distributions having various starting points, as shown. The slope of each of these linear elements is determined in succession by imposing the tangency condition at corresponding points along the body. (The details of this procedure are clearly described in Sauer's book, reference 7.)

For calculating a first-order solution which forms the first step of a second-order solution, this broken-line approximation to the source strength is too crude. Although the final second-order velocities are given by first derivatives of ϕ, they involve second derivatives of the first-order solution φ, which enter through the particular integral. (See equations (5a) and (5b).) Since differentiation is a roughening process, this means that the first-order potential must be one degree smoother when used as the basis for a second-order solution. This is achieved by approximating the unknown source strength by quadratic rather than linear elements, as shown in sketch (g). However, as indicated in the sketch, the linear element is also required for use at the tip of a pointed body, where the source strength actually rises linearly.

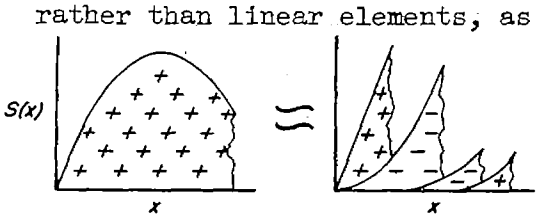

Sketch (g)

For a smooth body with continuous curvature these two basic solutions are sufficient. Others are required, however, if the body has corners or discontinuities in curvature, which require special treatment. A corner

is accounted for in the first-order solution by adding a source distribution of square-root strength, which produces a discontinuity in streamline slope along its foremost Mach cone. As indicated in sketch (h), this corner solution must be shifted upstream so that its effect first reaches the surface just at the corner. In the same way, a curvature discontinuity is accounted for in the first-order solution by adding a source distribution of 3/2-power strength, which produces a discontinuity in streamline curvature along its foremost Mach cone. This curvature solution is required also at a corner, because an apparent curvature discontinuity remains after the corner solution is added.

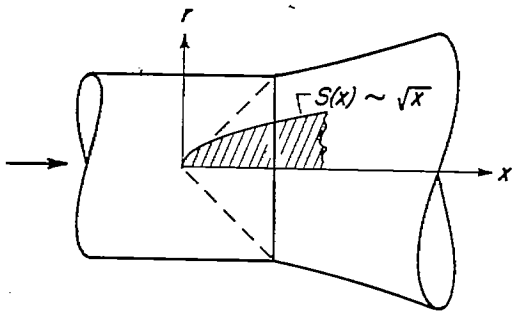

Sketch (h)

Because of the roughening due to differentiation, the particular integral has stronger discontinuities than the first-order solution. Thus in the case of a discontinuity in body curvature the particular integral behaves like a corner solution, while in the case of an actual corner it behaves like the solution at a step in the streamlines (sketch (i)). These spurious discontinuities must be canceled in the complementary function. For this purpose the corner solution is used again in the first case. In the second case, another basic solution is required which produces an actual step in the streamlines. As indicated in sketch (i), this step solution results from an inverse square-root source distribution.

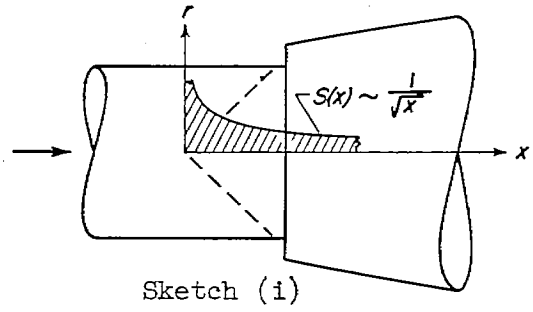

Sketch (i)

To summarize, the first-order solution and complementary function are calculated by superposing the following five basic solutions:

1. Linear source solution - used at tip of pointed body
2. Quadratic source solution - used thereafter for body having continuous curvature
3. Corner solution - used to account for corner
4. Curvature solution - used to account for curvature discontinuity
5. Step solution - used to cancel step in ψ' at corner

Homogeneous solutions.- The required solutions are axially symmetric solutions of the wave equation, homogeneous in the space variables. The order of homogeneity is integral (1 and 2) in the first two cases, and half-integral (1/2, 3/2, -1/2) in the others. Such solutions have been studied in detail by Hayes (reference 8). For present purposes $\varphi^{(m)}$,

the solution homogeneous of order m, can be obtained by taking the source distribution $S(x)$ in equation (15) proportional to x^m. It is convenient to choose the source strength as

$$S^{(m)}(x) = \frac{C}{m!} x^m \tag{16}$$

where C is a normalization constant, so that solutions of various orders are related by

$$\varphi^{(m-p)} = \left(\frac{\partial}{\partial x}\right)^p \varphi^{(m)} \tag{17}$$

For integral m, the solutions have simplest form if the normalization constant C is taken to be unity. Then using various relations for the hypergeometric function (see, for example, reference 9) the solutions are found to be given by

$$\varphi^{(m)}(x,r) = -\frac{x^m}{1\cdot 3\ldots(2m-1)} (1-t^2)^{m+\frac{1}{2}} F\left(\frac{m+1}{2},\frac{m+2}{2};m+\frac{3}{2};\ 1-t^2\right) \tag{18}$$

Here the conical variable

$$t = \frac{\beta r}{x} \tag{19}$$

is the ratio of the tangent of the polar angle to the tangent of the Mach angle, and so varies from zero on the axis to unity at the Mach cone. For integral m, the hypergeometric functions which occur in equation (18) can be expressed in terms of products of $\sqrt{1-t^2}$ and $\operatorname{sech}^{-1}t$ with polynomials in t^2. The first two required basic solutions are obtained by setting m equal to 1 and 2, which gives:

<u>Linear source solution ($m = 1$)</u>

$$\left.\begin{aligned}
\varphi &= -x\left(\operatorname{sech}^{-1}t - \sqrt{1-t^2}\right) & \varphi_{xx} &= -\frac{1}{x}\frac{1}{\sqrt{1-t^2}} \\
\varphi_x &= -\operatorname{sech}^{-1}t & \varphi_{xr} &= \frac{\beta}{x}\frac{1}{t\sqrt{1-t^2}} \\
\varphi_r &= \beta\frac{\sqrt{1-t^2}}{t} & \varphi_{rr} &= -\frac{\beta^2}{x}\frac{1}{t^2\sqrt{1-t^2}}
\end{aligned}\right\} \tag{20}$$

Quadratic source solution (m = 2)

$$\left.\begin{aligned}
&\varphi = -\frac{1}{2}x^2\left[\left(1+\frac{1}{2}t^2\right)\operatorname{sech}^{-1}t - \frac{3}{2}\sqrt{1-t^2}\right] && \varphi_{xx} = -\operatorname{sech}^{-1}t \\
&\varphi_x = -x\left(\operatorname{sech}^{-1}t - \sqrt{1-t^2}\right) && \varphi_{xr} = \beta\frac{\sqrt{1-t^2}}{t} \\
&\varphi_r = \frac{\beta}{2}x\left(\frac{\sqrt{1-t^2}}{t} - t\operatorname{sech}^{-1}t\right) && \varphi_{rr} = -\frac{\beta^2}{2}\left(\frac{\sqrt{1-t^2}}{t^2} + \operatorname{sech}^{-1}t\right)
\end{aligned}\right\} \quad (21)$$

For half-integral m, it is convenient to choose the normalization constant C as $\sqrt{2/\pi}$, so that the solutions have simple values at the Mach cone. (The difference in normalization for integral and half-integral m is of no concern, because the connection between them is never used.) Transforming the hypergeometric function into a more useful form for this case gives

$$\varphi^{(m)}(x,r) = -x^m\frac{\sqrt{2}(1-t)^{m+\frac{1}{2}}}{\Gamma\left(m+\frac{3}{2}\right)\sqrt{1+t}}F\left(\frac{1}{2},m+1;m+\frac{3}{2};\frac{1-t}{1+t}\right) \qquad (22)$$

The hypergeometric functions occurring here can be expressed in terms of products of complete elliptic integrals and algebraic functions of t. The remaining three required basic solutions are obtained by setting m equal to 1/2, 3/2, and -1/2. For convenience, asymptotic values valid just inside the Mach cone (where $t = 1$) are also given below:

Corner solution (m = 1/2)

$$\left.\begin{aligned}
\varphi &= -\sqrt{x}\frac{4\sqrt{2}}{\pi}\sqrt{1+t}\,(K-E) && \sim 0 \\
\varphi_x &= -\frac{1}{\sqrt{x}}\frac{2\sqrt{2}}{\pi}\frac{1}{\sqrt{1+t}}K && \sim -\frac{1}{\sqrt{x}} \\
\varphi_r &= \frac{\beta}{\sqrt{x}}\frac{2\sqrt{2}}{\pi}\frac{1}{\sqrt{1+t}}\left(\frac{1+t}{t}E - K\right) && \sim \frac{\beta}{\sqrt{x}} \\
\varphi_{xx} &= \frac{1}{x^{3/2}}\frac{\sqrt{2}}{\pi}\frac{1}{(1-t)\sqrt{1+t}}(K-E) && \sim \frac{1}{8}\frac{1}{x^{3/2}} \\
\varphi_{xr} &= \frac{\beta}{x^{3/2}}\frac{\sqrt{2}}{\pi}\frac{1}{(1-t)\sqrt{1+t}}\left(\frac{1}{t}E-K\right) && \sim \frac{3}{8}\frac{\beta}{x^{3/2}} \\
\varphi_{rr} &= -\frac{\beta^2}{x^{3/2}}\frac{\sqrt{2}}{\pi}\frac{1}{(1-t)\sqrt{1+t}}\left(\frac{2-t^2}{t^2}E - \frac{2-t}{t}K\right) && \sim -\frac{7}{8}\frac{\beta^2}{x^{3/2}}
\end{aligned}\right\} \quad (23)$$

Curvature solution ($m = 3/2$)

$$\left.\begin{aligned}
\varphi &= -x^{3/2}\frac{8\sqrt{2}}{9\pi}\sqrt{1+t}\,[(3+t)\,K - 4E] && \sim 0\\
\varphi_x &= -\sqrt{x}\,\frac{4\sqrt{2}}{\pi}\sqrt{1+t}\,(K-E) && \sim 0\\
\varphi_r &= \beta\sqrt{x}\,\frac{4\sqrt{2}}{3\pi}\sqrt{1+t}\left(\frac{1}{t}E-K\right) && \sim 0\\
\varphi_{xx} &= -\frac{1}{\sqrt{x}}\,\frac{2\sqrt{2}}{\pi}\,\frac{1}{\sqrt{1+t}}\,K && \sim -\frac{1}{\sqrt{x}}\\
\varphi_{xr} &= \frac{\beta}{\sqrt{x}}\,\frac{2\sqrt{2}}{\pi}\,\frac{1}{\sqrt{1+t}}\left(\frac{1+t}{t}E-K\right) && \sim \frac{\beta}{\sqrt{x}}\\
\varphi_{rr} &= -\frac{\beta^2}{\sqrt{x}}\,\frac{2\sqrt{2}}{3\pi}\,\frac{1}{\sqrt{1+t}}\left(2\frac{1+t}{t^2}E-\frac{2-t}{t}K\right) && \sim -\frac{\beta^2}{\sqrt{x}}
\end{aligned}\right\} \qquad (24)$$

Step solution ($m = -1/2$)

$$\left.\begin{aligned}
\varphi &= -\frac{1}{\sqrt{x}}\,\frac{2\sqrt{2}}{\pi}\,\frac{1}{\sqrt{1+t}}\,K && \sim -\frac{1}{\sqrt{x}}\\
\varphi_x &= \frac{1}{x^{3/2}}\,\frac{\sqrt{2}}{\pi}\,\frac{1}{(1-t)\sqrt{1+t}}\,(K-E) && \sim \frac{1}{8}\,\frac{1}{x^{3/2}}\\
\varphi_r &= \frac{\beta}{x^{3/2}}\,\frac{\sqrt{2}}{\pi}\,\frac{1}{(1-t)\sqrt{1+t}}\left(\frac{1}{t}E-K\right) && \sim \frac{3}{8}\,\frac{\beta}{x^{3/2}}
\end{aligned}\right\} \qquad (25)$$

Here K and E are the complete elliptic integrals of first and second kind with modulus $k = \sqrt{(1-t)/(1+t)}$. The second derivatives of the step solution are not required.

Use of relations among second derivatives.- All three second derivatives of the first-order potential are required in order to carry out the second-order solution. (See equations (5b).) Considerable labor can be avoided by calculating directly only one of them, say φ_{xx}. Then φ_{xr} and φ_{rr} can be obtained from the equation of motion and tangency condition. Thus the first-order equation of motion (3) gives immediately an expression for φ_{rr}:

$$\varphi_{rr} = \beta^2\varphi_{xx} - \frac{\varphi_r}{r} \tag{26}$$

Differentiating the first-order tangency condition (equation (10)) with respect to x gives an expression for φ_{xr} on the surface of the body:

$$\varphi_{xr} = R'' - R'\varphi_{rr} \qquad \text{at} \quad r = R(x) \tag{27}$$

The computing forms described later incorporate this simplification.

Tables of basic solutions.- With this simplification, the five basic solutions and their required derivatives comprise 13 distinct functions. Each is a power of x multiplied by a function of t alone. Thus, associated with the linear and quadratic source solutions are the following six functions of t, which, as indicated, play different roles in the two solutions:

Symbol	Functional form	Role in quadratic source solution	Role in linear source solution
$a(t)$	$\left(\frac{1}{2}+\frac{1}{4}t^2\right)\operatorname{sech}^{-1}t-\frac{3}{4}\sqrt{1-t^2}$	$-\varphi/x^2$	---
$b(t)$	$\operatorname{sech}^{-1}t-\sqrt{1-t^2}$	$-\varphi_x/x$	$-\varphi/x$
$c(t)$	$\frac{1}{2}\left(\frac{\sqrt{1-t^2}}{t}-t\operatorname{sech}^{-1}t\right)$	$\varphi_r/\beta x$	---
$d(t)$	$\operatorname{sech}^{-1}t$	$-\varphi_{xx}$	$-\varphi_x$
$e(t)$	$\frac{\sqrt{1-t^2}}{t}$	(φ_{xr}/β)	φ_r/β
$f(t)$	$\frac{1}{\sqrt{1-t^2}}$	---	$-x\varphi_{xx}$

(28)

$\operatorname{sech}^{-1}t = \ln\left(\frac{1}{t}+\sqrt{\frac{1}{t^2}-1}\right)$

These functions are tabulated in table I for t ranging from 0.100 to 0.940 by increments of 0.001.[4] Values are given to six significant figures or seven decimals, whichever is the lesser, and are believed to be correct to within one-half unit in the last place. Linear interpolation results in errors of no more than three units in the last place except near the beginning and end of the table.

[4]Tables I and II are modeled after unpublished tables for calculating first-order supersonic flow past inclined bodies which were prepared for the author at the Rand Corporation.

Likewise, associated with the corner, curvature, and step solutions are the following seven functions of t:

Symbol	Functional form	Role in curvature solution	Role in corner solution	Role in step solution
$g(t)$	$\frac{8\sqrt{2}}{9\pi}\sqrt{1+t}\,[(3+t)\,K-4E]$	$-\varphi/x^{3/2}$	---	---
$h(t)$	$\frac{4\sqrt{2}}{\pi}\sqrt{1+t}\,(K-E)$	$-\varphi_x/\sqrt{x}$	$-\varphi/\sqrt{x}$	---
$i(t)$	$\frac{4\sqrt{2}}{3\pi}\sqrt{1+t}\left(\frac{1}{t}E-K\right)$	$\varphi_r/\beta\sqrt{x}$	---	---
$j(t)$	$\frac{2\sqrt{2}}{\pi}\frac{1}{\sqrt{1+t}}K$	$-\sqrt{x}\,\varphi_{xx}$	$-\sqrt{x}\,\varphi_x$	$-\sqrt{x}\,\varphi$
$k(t)$	$\frac{2\sqrt{2}}{\pi}\frac{1}{\sqrt{1+t}}\left(\frac{1+t}{t}E-K\right)$	$(\sqrt{x}\,\varphi_{xr}/\beta)$	$\sqrt{x}\,\varphi_r/\beta$	---
$l(t)$	$\frac{\sqrt{2}}{\pi}\frac{1}{(1-t)\sqrt{1+t}}(K-E)$	---	$x^{3/2}\,\varphi_{xx}$	$x^{3/2}\varphi_x$
$m(t)$	$\frac{\sqrt{2}}{\pi}\frac{1}{(1-t)\sqrt{1+t}}\left(\frac{1}{t}E-K\right)$	---	$(x^{3/2}\,\varphi_{xr}/\beta)$	$x^{3/2}\varphi_r/\beta$

(29)

These functions are tabulated in table II for t ranging from 0.100 to 1.000 by increments of 0.001. The number of figures and accuracy are the same as for table I. Linear interpolation results in errors of no more than three units in the last place except for certain of the functions near the beginning of the table.

To facilitate interpolation, first forward differences are given without their algebraic sign in both tables. It should be noted that the differences are actually negative except in the case of the function $f(t)$ in table I.

Choice of Intervals

The five basic solutions are superimposed to calculate the first-order potential φ and again to calculate the complementary function χ.

The procedure, analogous to that of Kármán and Moore, is indicated in sketch (j) for a smooth pointed body. First, a linear source is added at the origin of strength sufficient to produce tangent flow just at the tip. Second, a quadratic source is added at the origin of strength (negative for a convex body), such that together with the linear source it produces tangent flow on the body at some distance δ_0 from the nose. Third, another quadratic source is added with its vertex shifted downstream so that its effect begins at the end of the first interval, and its strength is determined by imposing the tangency condition at some farther distance δ_1 along the body. Any corners or curvature discontinuities (or steps in the complementary function) must be accounted for by adding suitable strengths of the appropriate solutions, after which the superposition of quadratic sources continues as before.

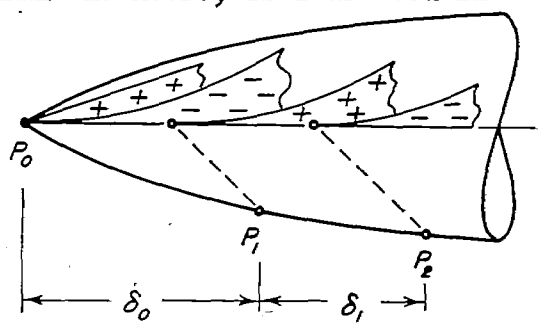

Sketch (j)

The proper choice of intervals is of crucial importance. They should be taken as large as possible, because the computing labor increases nearly as the square of the number of intervals. On the other hand, the inaccuracy associated with using finite intervals rises with the square of their length, so that too large intervals lead to unacceptable error. It should be emphasized that the error considered here, which will be termed "numerical error," is the difference between the approximate second-order solution for finite intervals and the corresponding limiting solution for infinitesimal intervals; it is quite distinct from the difference between the second-order and exact solutions.

Fortunately, the tendency for numerical errors in successive intervals to accumulate is largely offset by the downstream damping of disturbances. Furthermore, successive numerical errors alternate in sign in most cases. Consequently, it has been found sufficient to formulate rules according to which each interval alone in an otherwise exact solution would cause no more than 1-percent numerical error. The entire second-order pressure distribution will then be determined correctly to within roughly 1 percent of the maximum pressure increment.

Simplification resulting from similarity.- The dependence of the first-order solution upon Mach number can be accounted for by the supersonic counterpart of the Göthert rule (reference 6), which is the similarity rule for linearized compressible flow. This similarity rule does not hold to second order. However, carrying out the usual similarity analysis shows that it holds approximately for the particular integral, which is the primary source of numerical error. (The similarity for the particular integral fails to be exact only to the extent to

which β differs from M, which is important only in the transonic range.) Therefore, any measure of numerical inaccuracy in the second-order solution may be expected to follow roughly the ordinary supersonic similarity rule. It is clear that this approximate result is adequate for estimating lengths of intervals, because moderate errors in interval length will not appreciably affect the solution. As a consequence, rules for choosing intervals which have been determined at one Mach number become universally valid if restated with the radius R replaced throughout by βR, the reduced radius of the supersonic similarity rule (or possibly MR, since the approximate similarity rule does not distinguish between β and M). This conclusion, which greatly simplifies the formulation of rules, has been confirmed by a number of numerical calculations.

First interval for pointed body.- If a pointed body begins with a conical nose of finite length, the first interval is, of course, taken equal to the length of the cone. Otherwise, the meridian curve will ordinarily begin with finite curvature. For a specified limit of numerical error, the maximum permissible length of the first interval must be proportional to the initial radius of curvature, which is the primary length in the problem. The factor of proportionality will, of course, depend upon the shape of the body. If the meridian curve is analytic, dimensional analysis combined with the supersonic similarity rule indicates that the first interval is given by an expression of the form[5]

$$\delta_o = \frac{1}{M|R_o''|} G_o\left(\beta R_o', \frac{R_o'''}{\beta R_o''^2}, \ldots\right) \tag{30}$$

Here R_o', R_o'', R_o''' are the first three derivatives of $R(x)$ evaluated at the vertex, and the dots indicate that no appreciable dependence upon higher derivatives is to be expected. Indeed, for slender smooth bodies even the second variable $R_o'''/(\beta R_o''^2)$ is normally very small compared with the first. Hence it may be assumed that the function G_o does not depend significantly upon its second variable, so that the length of the first interval is given by

$$\delta_o = \frac{1}{M|R_o''|} G_o(\beta R_o') \tag{31}$$

It is now clear that the body shape need not be analytic throughout the first interval; it is sufficient that no violent changes in curvature occur.

[5]That the denominator should be taken as MR_o rather than βR_o is suggested by the result of equation (32).

The form of the function G_o can be determined by analysis, because the second-order solution at the end of the first interval of a general ogive can be calculated exactly as well as approximately if the interval is very short. Although the result is formidable, it simplifies greatly in the limiting case when $\beta R_o'$ approaches unity (which corresponds physically to the Mach cone becoming tangent to the nose). In this case, for a relative numerical error $\Delta\phi_x/\phi_x$ in streamwise velocity perturbation, the length of the first interval is

$$\delta_o \sim \sqrt{\frac{40}{\gamma+1}} \frac{1}{M|R_o''|} (1-\beta^2 R_o'^2) \sqrt{|\Delta\phi_x/\phi_x|} \qquad \text{as } \beta R_o' \to 1 \tag{32}$$

Numerical examples show that this asymptotic form is, with a revised constant of proportionality, a good approximation to the function throughout the range of practical application. The relative numerical error at the end of the first interval will not exceed 1 percent if[6]

$$\boxed{\delta_o = \frac{1}{8} \frac{1}{M|R_o''|} (1-\beta^2 R_o'^2)} \tag{33}$$

It is conceivable that an unusual body shape might be encountered for which the curvature would change considerably over this length. If so, the above rule would not apply (the variable $R_o'''/(\beta R_o''^2)$ in equation (30) would not be negligible), and some experimentation would be required to ascertain how much the interval should be reduced.

Internal intervals.- At any point on a smooth body, the length of the next interval will be proportional to the local radius, with the factor of proportionality depending upon the body shape in the vicinity of the point. If the meridian curve is analytic, dimensional analysis together with the supersonic similarity rule indicates that for a specified limit of numerical error the length of the interval from the nth to (n + 1)st point is given by

$$\delta_n = \beta R_n \, G_1(\beta R_n', \beta^2 R_n R_n'', \beta^3 R_n^2 R_n''', \ldots) \tag{34}$$

The third variable here corresponds to the second variable in equation (30); its form is different because R rather than $1/R''$ is taken as the primary reference length. (The second variable here has no counterpart in equation (30) because R is zero at the tip.) For a smooth slender body, the third variable is ordinarily very small, as

[6]This rule ordinarily permits greater first intervals than the rule $\delta_o = 0.025/\beta$ times initial radius of curvature which was previously suggested in reference 4.

are all subsequent variables which involve higher derivatives. Then according to the argument used previously, the function G_1 depends significantly upon only its first two variables. This conclusion is reinforced by the empirically determined fact that discontinuities in curvature must be accounted for separately, but not jumps in third and higher derivatives. Hence the nth interval is given by

$$\delta_n = \beta R_n \, G_1(\beta R_n', \beta^2 R_n R_n'') \tag{35}$$

As before, the assumption that the body is analytic can now be replaced by the requirement that no violent changes in curvature occur.

Analytic determination of the function G_1 seems impractical. Its detailed form could be determined experimentally by calculating a number of solutions using intervals of various lengths. However, experience suggests that for the body shapes encountered in practice G_1 may be taken as a constant. The relative numerical error will apparently not exceed 1 percent if internal intervals for bodies without corners are chosen so that

$$\boxed{\delta_n = \beta R_n} \tag{36}$$

Modification for corner or curvature discontinuity.- Two points must be chosen at any discontinuity in slope or curvature, one just on each side, as indicated in sketch (k). A corner so strongly affects the subsequent flow field that it has been found necessary to reduce the next interval. The relative error will apparently not exceed 1 percent if the interval following a corner is taken to be

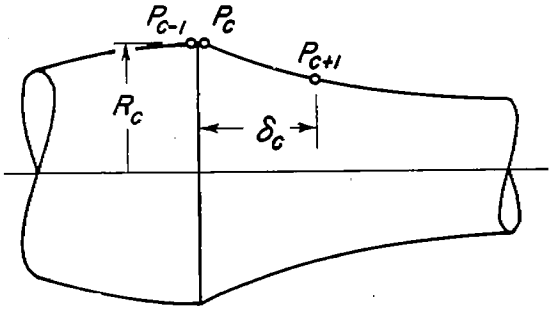

Sketch (k)

$$\delta_c = \frac{1}{2} \beta R_c \tag{37}$$

where R_c is the radius at the corner. Thereafter, intervals can be chosen according to the rule for smooth bodies (equation (36)).

Limitations of rules.- These rules for choosing intervals are intended only as guides and must not be followed blindly. Although adequate for most bodies, they may fail for unusual shapes, particularly those having rapid changes in curvature. For example, the rule for choosing internal intervals (equation (36)) does not apply to the

corrugated body shown in sketch (l). In this case the variable $\beta^3 R_n{}^2 R_n'''$ which was taken to be very small in equation (34) is proportional to $(\bar{R}/\lambda)^2$, and so becomes arbitrarily large as the corrugation wave length is reduced. It is clear physically that the interval should in this case be chosen as some fraction of the wave length. Fortunately, the fact that intervals have been taken too large usually reveals itself by excessive scatter in the final second-order results.

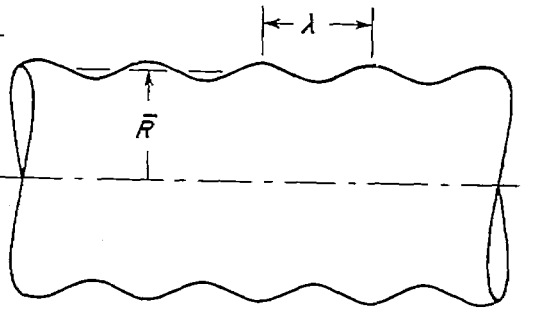

Sketch (l)

Also, the rules have been developed for the purpose of calculating flows at moderate or high supersonic speeds. They may accordingly become invalid at Mach numbers only slightly greater than unity, where they should involve the transonic similarity parameter, R'/β.

As in the case of solution by the method of characteristics, the only infallible rule (which may be invoked in case of doubt) is that the intervals are sufficiently small if further reduction causes no discernible change in the result.

The rules given above are believed to be somewhat conservative for normal shapes. In some cases, therefore, experience may indicate that the length of the intervals can be increased. It seems inadvisable, however, ever to double the prescribed values; not only is the scatter quadrupled, but successive errors then accumulate to such an extent that the result departs progressively farther from the true solution with distance downstream.

Description of Computing Forms

Standard computing forms have been prepared which largely reduce the second-order solution to routine calculation with a desk machine. Form A is used for bodies having continuous curvature. Form B is an insert to be pasted into form A to account for a corner or discontinuity in curvature. Provision is made for six points beyond the tip of a pointed body, which is adequate for most purposes. The forms can readily be extended to handle longer calculations.[7] Copies of the forms suitable for photosensitive reproduction are enclosed.

[7]Thus if one extra point is required, every row on each side of forms A and B which now extends to column P_6 (except rows 6m to 6s, 6mm, and 6ss of form A) is extended to form an additional column labeled P_7, and below row 6w of form A is inserted a new group of rows identical with rows 6a to 6w on the left and 6mm to 6vv on the right, but labeled 7- and containing blanks only in column P_7.

The desired values of Mach number and γ are entered at the top of form A, together with values of x, R, R', and R'' at points along the body chosen according to the rules formulated above. Then the form can be given to a computer together with tables I and II. The solution for a typical ogive or boattail can be calculated in from 5 to 10 hours.

As the solution progresses along the body, the results are found as differences of increasingly large numbers. Consequently, it is advisable to carry all computations to six significant figures or seven decimal places, whichever is the lesser. It is for this reason that tables I and II must be so extensive. It is not, of course, necessary to prescribe the problem with such accuracy; it is sufficient to give M, γ, and the body shape to three significant figures.

Details of form A.- The left half of form A is devoted chiefly to the calculation of the first-order potential φ and its required derivatives. The particular integral ψ is also found in the last 23 rows of the left side. The right half gives a parallel calculation of the complementary function X. The second-order pressure coefficient is obtained in rows 63 to 73, and the corresponding first-order result, if required, in rows 74 to 83.

Following various preliminary calculations in rows 1 to 19, each group of from 10 to 13 rows bounded by double lines comprises a separate basic solution. The first such group (rows 0d to 0w) provides for a linear source solution beginning at the origin in case the body has a pointed tip. It may be noted that a stratagem has been introduced in calculating its effect at the tip. There both x and R are zero, so that the value of the conical variable t given by equation (19) would be indeterminate. This difficulty is surmounted by identifying values at the tip with those at the end of a tangent cone whose length is arbitrarily chosen as unity, as indicated in sketch (m). The requisite modification of given values in the first column is indicated by asterisks in rows 13, 14, and 16. Each of the subsequent six groups (coded 1- to 6-) provides a quadratic source solution, the first beginning at the origin. Each of these seven groups is separated into three subdivisions: first, determination of the conical variable t (row -d) and interpolation of the required functions from table I; second, calculation of the required strength of the solution (row -s) from the tangency condition; third, calculation of its contributions to $-\varphi$, $-\varphi_x$, $\bar{\varphi}_r/\beta$, and $-\varphi_{xx}$ (rows -t to -w) at each of the points P_0 to P_6.

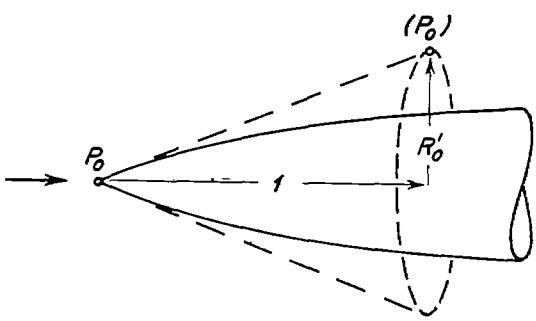

Sketch (m)

These separate contributions are added to obtain the corresponding complete first-order results in rows 20 to 23. Then equations (26) and (27) permit the calculation of the remaining two second derivatives, $-\varphi_{rr}$ (row 27) and φ_{xr} (row 29). Finally, equations (5) for the particular integral are used to determine ψ_x/M^2 (row 45), ψ_r/M^2 (row 49), and $-\psi/M^2$ (row 52), the last being required only on each side of every corner.

On the right half, various quantities required in calculating the complementary function χ are assembled in rows 53 to 60. There follow seven groups of three or four rows each which are the second-order counterparts of the adjacent first-order groups, a linear source solution in rows 0-- and quadratic source solutions in rows 1-- to 6--. For each group, the second-order tangency condition yields a weighting factor (row -ss) which multiplies the first-order results to give the corresponding contributions to the complementary function. Thus the contributions to $-\chi_x$ and χ_r/β are found in rows -uu and -vv.[8] Adding these together with the components due to the particular integral gives the complete second-order velocity components $-\phi_x$ (row 61) and ϕ_r/β (row 62). Then the second-order pressure coefficient at each point is determined in row 73 from equation (14). The first-order pressure coefficient, if required, is likewise obtained in row 83.

Details of form B.- The left half of form B provides a corner solution (rows C-) followed by a curvature solution (rows K-) for the first-order potential. Both are inserted at a corner; only the latter is used at a curvature discontinuity. The two groups are similar in structure to those of form A, with the addition that φ_{xr}/β is also calculated (rows -x) for later use.

The right half of form B contains the corresponding corner and curvature solutions for the complementary function. In addition, a step solution is provided (rows S-) which, as discussed previously, is required in the complementary function to neutralize a step in the particular integral at a corner. This step solution is placed adjacent to the first-order corner solution with which it is associated. Similarly, the corner solution is placed adjacent to the first-order curvature solution, with which it is associated even if the body has no corner. The curvature solution is not required in the complementary function except at a corner. At a corner the curvature discontinuity is so great that it must be accounted for at least approximately in order to preserve numerical accuracy. Its strength cannot be calculated exactly in terms of previously determined quantities, but fortunately curvature and corner solutions are so intimately related that it

[8]It may be noted that the coding is mnemonic to the extent that rows -u and -v are proportional to the first-order velocity perturbations in u and v, and rows -uu and -vv to the second-order values.

suffices to take them in the same ratio in the complementary function as in the first-order solution.

Use for first-order solution alone.- A very accurate first-order solution is found in the course of the second-order computation. The present scheme can therefore be simplified if only a first-order solution is desired. Except for rows (74) to (83), only the left halves of forms A and B are used, and form A can be terminated with row (22) and form B with row (Cx) (because curvature discontinuities need not be accounted for). Moreover, the following rows can be deleted from form A:

(7); (8); (16); all (-e)'s, (-h)'s, (-t)'s, and (-w)'s; and (20)

and the following from form B:

(Ce), and (Ct)

The restrictions on interval length can be considerably relaxed. An analysis similar to that described previously shows that the first interval for a pointed ogive can be taken as

$$\delta_o = \frac{1}{3}\frac{R_o'}{|R_o''|}\sqrt{1-\beta^2 R_o'^2} \tag{38}$$

A few numerical examples suggest that subsequent intervals can be taken at least twice as large as for a second-order solution, so that

$$\delta_n = \begin{Bmatrix} 2\beta R_n & \text{except just behind a corner} \\ \beta R_n & \text{just behind a corner} \end{Bmatrix} \tag{39}$$

PRACTICAL USE OF METHOD

The following instructions are intended to permit the reader to apply the method without reference to the preceding detailed discussion.

Applicability

The method gives both the first- and second-order velocities and pressures at the external surface of a body of revolution in supersonic flow provided that:

1. The body has a pointed nose, or has a sharp-edged open nose with purely supersonic external flow at the entrance, or is a boattail following an infinite cylinder.

2. The body contour is continuous (corners are permitted, but not steps), and has finite curvature (except at corners).

3. The slope of the contour is everywhere less than $(M^2 - 1)^{-1/2}$, the slope of the free-stream Mach cones.[9]

In order to take advantage of the tables, the slope must in fact be nowhere greater than 94 percent of this value. Furthermore, the solution can be carried back only to the point at which the radius of the Mach cone from the nose has grown to ten times the local radius, as indicated in sketch (n) for an open-nosed body. The solution could be continued beyond this point only by extending the tables according to equations (28) and (29).

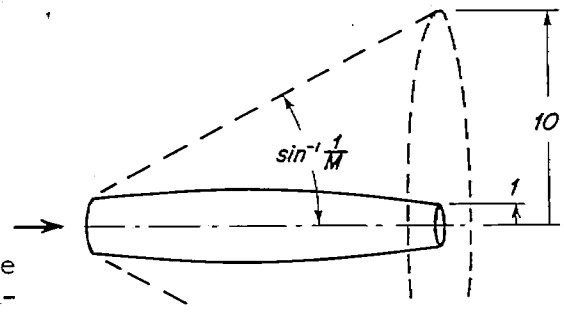

Sketch (n)

Choice of Points

For normal bodies, points on the body are chosen according to the following rules. These rules may fail if the curvature changes unusually rapidly; this will be revealed by excessive scatter in the second-order solution, which indicates that the intervals must be reduced.

1. Choose point P_0 at the vertex of a pointed body.

2. If a pointed body has a conical nose of finite length, choose point P_1 immediately behind the base of the cone. Otherwise, choose P_1 at a distance behind the vertex no greater than

$$\delta_0 = \frac{1-\beta^2 R_0'^2}{8M\left|R_0''\right|}$$

where R_0' and R_0'' are the slope and second derivative at the vertex.

3. Choose point P_1 immediately behind the start of an open-nosed body or boattail.

[9]Although there is no absolute limitation on negative slope, the method becomes inaccurate when the magnitude of the maximum negative slope exceeds $(M^2-1)^{1/2}$.

4. Wherever the body has continuous curvature, choose point P_{n+1} beyond point P_n no farther than

$$\delta_n = \beta R_n$$

where R_n is the radius at P_n.

5. For a discontinuity in slope or curvature, reduce the preceding intervals if necessary so that a point falls exactly upon the discontinuity. Associate this point with the body shape just ahead of the discontinuity. Choose the next point at the same abscissa, but associate it with the body shape just behind the discontinuity. An exception arises, however, if the discontinuity follows a conical tip or infinitely long cylinder, or is the lip of an open-nosed body; then (as prescribed by rules 2 and 3) only a single point is required, and is associated with the body shape just behind the discontinuity.

6. Choose the first interval behind a corner no greater than

$$\delta_c = \frac{1}{2} \beta R_c$$

where R_c is the radius at the corner. A boattail or open-nosed body is to be regarded as starting with a corner if its initial slope is different from zero. The previous rules apply to subsequent intervals.

Examples of choice of points.- The choice of points for four typical bodies is indicated in sketch (o).

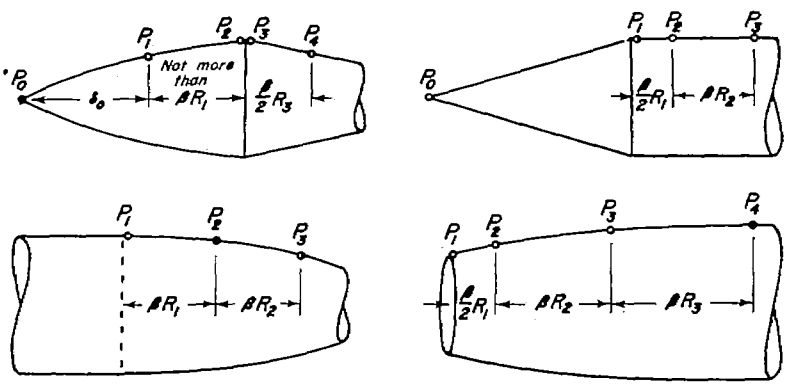

Sketch (o)

Preparation of Computing Form

Form A is prepared for computation in the following steps:

1. Enter the desired free-stream Mach number M in row (1) to three significant figures.

2. Enter the desired value of the adiabatic exponent γ in row (2) to three significant figures (1.40 for air).

3. In the column corresponding to each of the points P_n enter the abscissa in row (13), body radius in row (14), slope in row (15), and second derivative in row (16) to three significant figures.[10] However, in column P_o (which is used only for a pointed body) indeterminate forms are avoided by replacing the abscissa, radius, and second derivative by unity, the slope, and zero, respectively, as indicated on form A by asterisks. The origin for measuring abscissas must be taken at the tip of a pointed body, but is arbitrary for other shapes.[11] The unit of length is arbitrary, but it is usually convenient to measure in semicalibers.

4. If the body is not pointed, strike out column P_o and rows (0d) to (0w) and (0ss) to (0vv).

5. If point P_n lies just behind a corner or curvature discontinuity, cut out and discard all rows labeled (n-). Replace these by pasting in form B for a corner, or the portion of form B below the double line for a curvature discontinuity, with the first column alined below column P_n of form A. For example, sketch (p) shows schematically the modification required for a discontinuity between points P_2 and P_3, as on the first body shown in sketch (o). Note that a boattail or open-nosed body is to be regarded as starting with a corner unless the initial slope is zero, and with a curvature discontinuity unless the initial curvature is zero.

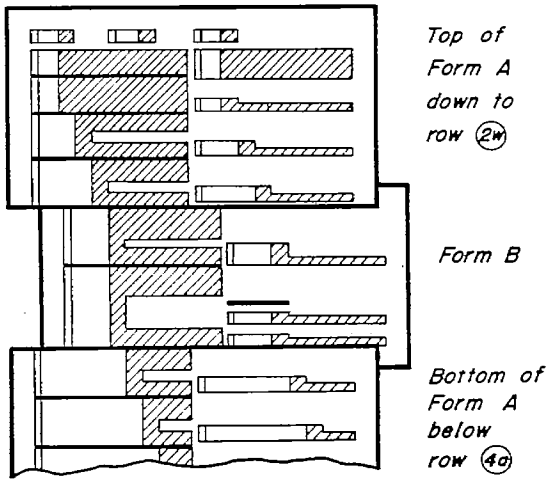

Sketch (p)

Computing

The computing instructions on forms A and B are intended to be completely self-explanatory. As noted, all calculations should be carried to six significant figures or seven decimals, whichever

[10] Care should be taken to give R' and R'' the proper algebraic sign.

[11] An exception arises in the unlikely case of an open-nosed body or boattail which starts with zero slope and curvature. In order to avoid indeterminate forms in this case, the origin must not coincide with the start of the contour.

is the lesser (regarding given data as exact to that accuracy). The tables should be interpolated linearly, noting that the first differences are given without algebraic sign.

Because the computations are rather involved, with only partial checks at rows 22 and 62, it has been found expedient when possible to have two computers carry out the same solution simultaneously with frequent comparisons. Typical shapes can be solved in from 5 to 10 hours.

Results

The quantities of interest obtained at each point of the body are:

First-order quantities

Row 21 : $-\varphi_x = 1 - \frac{u^{(1)}}{U}$

Row 22 : $\varphi_r/\beta = \frac{1}{\beta}\frac{v^{(1)}}{U}$

Row 83 : $c_p^{(1)}$

Second-order quantities

Row 62 : $\phi_r/\beta = \frac{1}{\beta}\frac{v^{(2)}}{U}$

Row 63 : $1 + \phi_x = \frac{u^{(2)}}{U}$

Row 73 : $c_p^{(2)}$

Only three significant figures should be kept in the final results.

Examples

Before calculating a new case, the reader may wish to check his computing procedure on the first few columns of a known solution. For this purpose, numerical values from various intermediate rows of the computing form are given below for a 6-caliber-long circular-arc ogive at a Mach number of 3. The significance of these rows is also indicated.

Dimensions are measured in semicalibers, and the intervals have been chosen slightly smaller than the limits prescribed by the rules in order to give simple values of x.

M:	1	3
γ:	2	1.4

		P_0	P_1	P_2	P_3
x:	13	*1	2.00	2.80	3.90
R:	14	*.168	.307	.414	.546
R':	15	.168	.139	.128	.112
R'':	16	*0	-.0142	-.0141	-.0141
$-\varphi$:	20	.0158906	.0305140	.0413536	.0549784
$-\varphi_x$:	21	.0441146	.0333807	.0295479	.0239671
φ_r/β:	22	.0593969	.0491439	.0452548	.0395979
$-\varphi_{xx}$:	23	.0364553	-.0001277	-.0011030	-.0052442
ψ_x/M^2:	45	.0018064	-.0002293	-.0003804	-.0006239
ψ_r/M^2:	49	.0037346	-.0019991	-.0021893	-.0028234
ϕ_r/β:	62	.0567766	.0475034	.0439176	.0386489
$1+\phi_x$:	63	.950400	.963404	.968955	.975150
$C_p^{(2)}$:	73	.0830	.0606	.0506	.0403
$C_p^{(1)}$:	83	.0660	.0514	.0459	.0376

Note: The asterisks serve as a reminder that in column P_0 the actual values of x,R, and R'' must be replaced by 1, the value of R', and 0, respectively.

The first- and second-order pressure distributions for the complete ogive are shown in sketch (q) in comparison with a solution by the

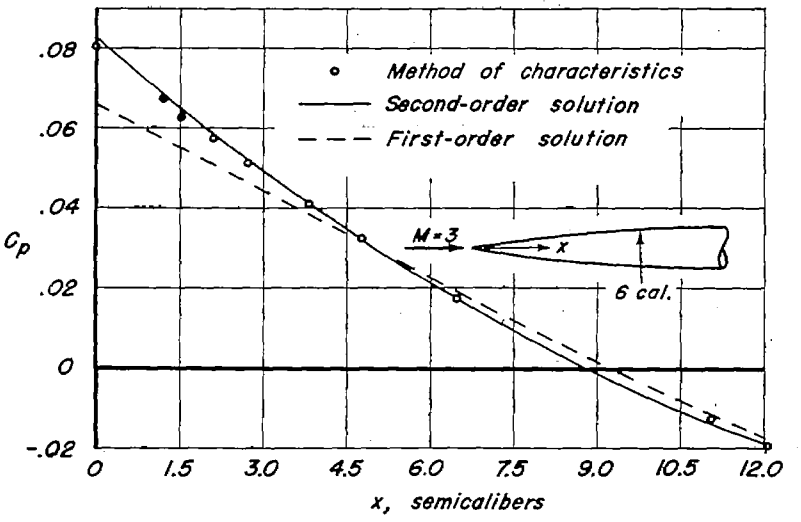

Sketch (q)

numerical method of characteristics given by Rossow in reference 10.

As a further example, corresponding results are shown in sketch (r) for a 3-caliber ogive at a Mach number of 1.5.

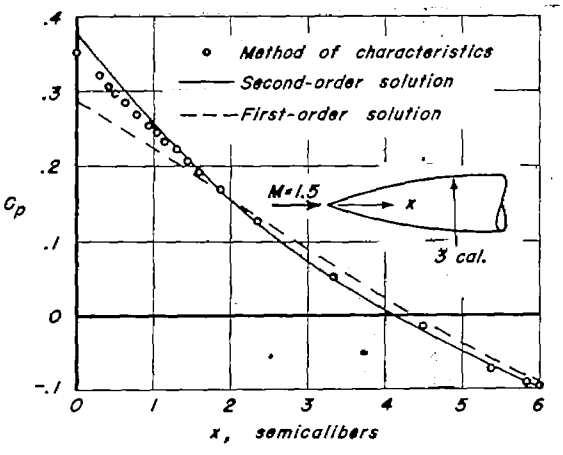

Sketch (r)

Ames Aeronautical Laboratory
National Advisory Committee for Aeronautics
Moffett Field, Calif., May 12, 1952

REFERENCES

1.* Van Dyke, Milton D.: A Study of Second-Order Supersonic Flow. Ph.D. Thesis, CIT, June 1949. (Available as NACA TN 2200, 1951.)

2. von Kármán, Theodor, and Moore, Norton B.: Resistance of Slender Bodies Moving with Supersonic Velocities, with Special Reference to Projectiles. Trans. A.S.M.E., vol. 54, no. 23, Dec. 15, 1932, pp. 303-310.

3. Busemann, A., and Walchner, O.: Profileigenschaften bei Überschallgeschwindigkeit. Forschung auf dem Gebiete des Ingenieurwesens, Bd. 4, Heft 2, March-April 1933, pp. 87-92. (Available as R.T.P. Trans. No. 1786, British Ministry of Aircraft Production.)

4.* Van Dyke, Milton D.: First- and Second-Order Theory of Supersonic Flow Past Bodies of Revolution. Jour. Aero. Sci., vol. 18, no. 3, Mar. 1951, pp. 161-179.

5. Lighthill, M. J.: The Position of the Shock-Wave in Certain Aerodynamic Problems. Quart. Jour. Mech. and Appl. Math., vol. I, pt. 3, Sept. 1948, pp. 309-318.

6. Göthert, B.: Ebene und räumliche Strömung bei hohen Unterschallgeschwindigkeiten. Lilienthal Gesellschaft für Luftfahrtforschung, Berlin, Bericht 127, Sept. 1940, pp. 97-101. (Available as NACA TM 1105, 1946.)

7. Sauer, Robert: Introduction to Theoretical Gas Dynamics. J. W. Edwards, (Ann Arbor), 1947, pp. 71-81.

8. Hayes, W. D.: Linearized Supersonic Flows with Axial Symmetry. Quart. Appl. Math., vol. 4, no. 3, Oct. 1946, pp. 255-261.

9. Magnus, Wilhelm, and Oberhettinger, Fritz: Formulas and Theorems for the Special Functions of Mathematical Physics. Chelsea Pub. Co., N.Y., 1949, pp. 7-11.

10. Rossow, Vernon J.: Applicability of the Hypersonic Similarity Rule to Pressure Distributions Which Include the Effects of Rotation for Bodies of Revolution at Zero Angle of Attack. NACA TN 2399, 1951.

* see Note p. 10 (3)

TABLE I.– LINEAR AND QUADRATIC SOURCE SOLUTIONS

t	a(t)		b(t)		c(t)		d(t)		e(t)		f(t)	
.100	.757854	4800	1.99824	990	4.82528	5075	2.99322	1000	9.94987	9951	1.00504	10
.101	.753054	4750	1.98834	981	4.77453	4978	2.98322	990	9.85036	9757	1.00514	10
.102	.748304	4700	1.97853	970	4.72475	4882	2.97332	981	9.75279	9569	1.00524	11
.103	.743604	4652	1.96883	961	4.67593	4791	2.96351	971	9.65710	9388	1.00535	10
.104	.738952	4604	1.95922	952	4.62802	4701	2.95380	963	9.56324	9208	1.00545	11
.105	.734348	4558	1.94970	942	4.58101	4614	2.94417	953	9.47116	9035	1.00556	11
.106	.729790	4512	1.94028	934	4.53487	4530	2.93464	944	9.38081	8867	1.00567	10
.107	.725278	4467	1.93094	925	4.48957	4448	2.92520	936	9.29214	8704	1.00577	11
.108	.720811	4424	1.92169	916	4.44509	4367	2.91584	927	9.20510	8545	1.00588	11
.109	.716387	4378	1.91253	908	4.40142	4291	2.90657	919	9.11965	8391	1.00599	12
.110	.712008	4338	1.90345	899	4.35851	4214	2.89738	910	9.03574	8240	1.00611	11
.111	.707670	4295	1.89446	892	4.31637	4141	2.88828	903	8.95334	8095	1.00622	11
.112	.703375	4255	1.88554	883	4.27496	4069	2.87925	894	8.87239	7951	1.00633	12
.113	.699120	4214	1.87671	875	4.23427	4000	2.87031	887	8.79288	7814	1.00645	11
.114	.694906	4175	1.86796	868	4.19427	3932	2.86144	879	8.71474	7678	1.00656	12
.115	.690731	4135	1.85928	860	4.15495	3865	2.85265	872	8.63796	7547	1.00668	12
.116	.686596	4098	1.85068	852	4.11630	3801	2.84393	864	8.56249	7418	1.00680	12
.117	.682498	4059	1.84216	846	4.07829	3738	2.83529	857	8.48831	7294	1.00692	12
.118	.678439	4023	1.83370	837	4.04091	3677	2.82672	850	8.41537	7172	1.00704	12
.119	.674416	3988	1.82533	831	4.00414	3617	2.81822	843	8.34365	7055	1.00716	12
.120	.670430	3950	1.81702	824	3.96797	3559	2.80979	836	8.27312	6938	1.00728	12
.121	.666480	3915	1.80878	817	3.93238	3502	2.80143	829	8.20374	6825	1.00740	13
.122	.662565	3880	1.80061	810	3.89736	3446	2.79314	823	8.13549	6714	1.00753	12
.123	.658685	3846	1.79251	804	3.86290	3392	2.78491	816	8.06835	6607	1.00765	13
.124	.654839	3812	1.78447	797	3.82898	3339	2.77675	809	8.00228	6503	1.00778	13
.125	.651027	3779	1.77650	790	3.79559	3288	2.76866	803	7.93725	6399	1.00791	12
.126	.647248	3746	1.76860	784	3.76271	3237	2.76063	797	7.87326	6300	1.00803	13
.127	.643502	3715	1.76076	778	3.73034	3189	2.75266	791	7.81026	6202	1.00816	13
.128	.639787	3683	1.75298	772	3.69845	3140	2.74475	785	7.74824	6107	1.00829	14
.129	.636104	3651	1.74526	766	3.66705	3093	2.73690	778	7.68717	6014	1.00843	13
.130	.632453	3621	1.73760	760	3.63612	3047	2.72912	773	7.62703	5923	1.00856	13
.131	.628832	3591	1.73000	753	3.60565	3002	2.72139	767	7.56780	5833	1.00869	14
.132	.625241	3560	1.72247	748	3.57563	2958	2.71372	762	7.50947	5747	1.00883	13
.133	.621681	3532	1.71499	743	3.54604	2915	2.70610	756	7.45200	5662	1.00896	14
.134	.618149	3502	1.70756	737	3.51689	2874	2.69854	750	7.39538	5578	1.00910	14
.135	.614647	3474	1.70019	731	3.48815	2832	2.69104	745	7.33960	5498	1.00924	14
.136	.611173	3446	1.69288	726	3.45983	2793	2.68359	739	7.28462	5417	1.00938	14
.137	.607727	3418	1.68562	720	3.43190	2753	2.67620	735	7.23045	5341	1.00952	14
.138	.604309	3391	1.67842	715	3.40437	2715	2.66885	729	7.17704	5263	1.00966	14
.139	.600918	3364	1.67127	710	3.37722	2677	2.66156	724	7.12441	5190	1.00980	15
.140	.597554	3337	1.66417	704	3.35045	2640	2.65432	719	7.07251	5117	1.00995	14
.141	.594217	3311	1.65713	700	3.32405	2604	2.64713	713	7.02134	5045	1.01009	15
.142	.590906	3285	1.65013	695	3.29801	2569	2.64000	709	6.97089	4975	1.01024	14
.143	.587621	3260	1.64318	689	3.27232	2535	2.63291	705	6.92114	4907	1.01038	15
.144	.584361	3234	1.63629	685	3.24697	2500	2.62586	699	6.87207	4840	1.01053	15
.145	.581127	3210	1.62944	680	3.22197	2468	2.61887	695	6.82367	4775	1.01068	15
.146	.577917	3185	1.62264	675	3.19729	2435	2.61192	690	6.77592	4710	1.01083	15
.147	.574732	3161	1.61589	671	3.17294	2403	2.60502	685	6.72882	4647	1.01098	16
.148	.571571	3137	1.60918	666	3.14891	2372	2.59817	681	6.68235	4586	1.01114	15
.149	.568434	3113	1.60252	661	3.12519	2341	2.59136	677	6.63649	4525	1.01129	15
.150	.565321	3090	1.59591	657	3.10178	2312	2.58459	672	6.59124	4466	1.01144	15
.151	.562231	3068	1.58934	653	3.07866	2282	2.57787	667	6.54658	4408	1.01160	16
.152	.559163	3044	1.58281	648	3.05584	2253	2.57120	664	6.50250	4351	1.01176	15
.153	.556119	3022	1.57633	643	3.03331	2225	2.56456	659	6.45899	4295	1.01191	16
.154	.553097	3000	1.56990	640	3.01106	2197	2.55797	655	6.41604	4240	1.01207	16
.155	.550097	2979	1.56350	635	2.98909	2170	2.55142	651	6.37364	4186	1.01223	16
.156	.547118	2956	1.55715	631	2.96739	2144	2.54491	647	6.33178	4134	1.01239	17
.157	.544162	2936	1.55084	627	2.94595	2117	2.53844	643	6.29044	4083	1.01256	16
.158	.541226	2914	1.54457	623	2.92478	2092	2.53201	639	6.24961	4031	1.01272	17
.159	.538312	2893	1.53834	619	2.90386	2066	2.52562	635	6.20930	3982	1.01289	16
.160	.535419		1.53215		2.88320		2.51927		6.16948		1.01305	

NACA

TABLE I.– CONTINUED

t	a(t)		b(t)		c(t)		d(t)		e(t)		f(t)	
.160	.535419	2873	1.53215	615	2.88320	2042	2.51927	632	6.16948	3933	1.01305	17
.161	.532546	2858	1.52600	611	2.86278	2017	2.51295	627	6.13015	3885	1.01322	17
.162	.529693	2843	1.51989	607	2.84261	1994	2.50668	624	6.09130	3838	1.01339	17
.163	.526860	2812	1.51382	604	2.82267	1970	2.50044	620	6.05292	3792	1.01356	17
.164	.524048	2794	1.50778	599	2.80297	1947	2.49424	616	6.01500	3746	1.01373	17
.165	.521254	2773	1.50179	596	2.78350	1924	2.48808	613	5.97754	3702	1.01390	17
.166	.518481	2755	1.49583	592	2.76426	1903	2.48195	609	5.94052	3658	1.01407	17
.167	.515726	2736	1.48991	589	2.74523	1880	2.47586	605	5.90393	3615	1.01424	18
.168	.512990	2717	1.48402	585	2.72643	1860	2.46981	602	5.86778	3573	1.01442	17
.169	.510273	2699	1.47817	581	2.70783	1838	2.46379	599	5.83205	3532	1.01459	18
.170	.507574	2680	1.47236	578	2.68945	1817	2.45780	595	5.79673	3491	1.01477	18
.171	.504894	2662	1.46658	575	2.67128	1798	2.45185	592	5.76182	3451	1.01495	18
.172	.502232	2645	1.46083	571	2.65330	1777	2.44593	589	5.72731	3412	1.01513	18
.173	.499587	2627	1.45512	567	2.63553	1758	2.44004	585	5.69319	3373	1.01531	18
.174	.496960	2609	1.44945	565	2.61795	1738	2.43419	582	5.65946	3335	1.01549	18
.175	.494351	2592	1.44380	561	2.60057	1719	2.42837	579	5.62611	3298	1.01567	19
.176	.491759	2575	1.43819	557	2.58338	1701	2.42258	575	5.59313	3262	1.01586	18
.177	.489184	2558	1.43262	555	2.56637	1683	2.41683	572	5.56051	3225	1.01604	19
.178	.486626	2541	1.42707	551	2.54954	1664	2.41110	569	5.52826	3190	1.01623	19
.179	.484085	2524	1.42156	548	2.53290	1647	2.40541	566	5.49636	3155	1.01642	18
.180	.481561	2508	1.41608	545	2.51643	1629	2.39975	563	5.46481	3120	1.01660	19
.181	.479052	2492	1.41063	542	2.50014	1612	2.39412	561	5.43361	3087	1.01679	20
.182	.476560	2476	1.40521	538	2.48402	1596	2.38851	557	5.40274	3054	1.01699	19
.183	.474084	2460	1.39982	535	2.46806	1578	2.38294	555	5.37220	3021	1.01718	19
.184	.471624	2444	1.39447	533	2.45228	1563	2.37739	551	5.34199	2988	1.01737	19
.185	.469180	2428	1.38914	530	2.43665	1548	2.37188	549	5.31210	2957	1.01756	20
.186	.466751	2414	1.38384	527	2.42119	1531	2.36639	546	5.28253	2927	1.01776	20
.187	.464337	2398	1.37857	523	2.40588	1515	2.36093	543	5.25326	2896	1.01796	19
.188	.461939	2383	1.37334	521	2.39073	1499	2.35550	540	5.22430	2865	1.01815	20
.189	.459556	2368	1.36813	519	2.37574	1485	2.35010	537	5.19565	2837	1.01835	20
.190	.457187	2353	1.36294	515	2.36089	1469	2.34473	535	5.16728	2807	1.01855	21
.191	.454834	2339	1.35779	512	2.34620	1455	2.33938	532	5.13921	2778	1.01876	20
.192	.452495	2324	1.35267	510	2.33165	1441	2.33406	529	5.11143	2750	1.01896	20
.193	.450171	2311	1.34757	507	2.31724	1426	2.32877	527	5.08393	2722	1.01916	21
.194	.447860	2285	1.34250	505	2.30298	1413	2.32350	524	5.05671	2695	1.01937	20
.195	.445565	2282	1.33745	501	2.28885	1398	2.31826	522	5.02976	2668	1.01957	21
.196	.443283	2268	1.33244	499	2.27486	1385	2.31304	519	5.00308	2641	1.01978	21
.197	.441015	2254	1.32745	496	2.26101	1372	2.30785	516	4.97667	2615	1.01999	21
.198	.438761	2241	1.32249	494	2.24729	1358	2.30269	514	4.95052	2590	1.02020	21
.199	.436520	2227	1.31755	491	2.23376	1345	2.29755	512	4.92462	2564	1.02041	21
.200	.434293	2213	1.31264	489	2.22025	1333	2.29243	509	4.89898	2539	1.02062	21
.201	.432080	2201	1.30775	486	2.20692	1321	2.28734	507	4.87359	2515	1.02083	22
.202	.429879	2187	1.30289	484	2.19371	1308	2.28227	504	4.84844	2490	1.02105	21
.203	.427692	2174	1.29805	481	2.18063	1296	2.27723	502	4.82354	2466	1.02126	22
.204	.425518	2161	1.29324	479	2.16767	1284	2.27221	499	4.79888	2443	1.02148	22
.205	.423357	2149	1.28845	476	2.15483	1271	2.26722	498	4.77445	2420	1.02170	22
.206	.421208	2136	1.28369	474	2.14212	1261	2.26224	495	4.75025	2397	1.02192	22
.207	.419072	2123	1.27895	471	2.12951	1248	2.25729	492	4.72628	2374	1.02214	22
.208	.416949	2111	1.27424	469	2.11703	1238	2.25237	491	4.70254	2352	1.02236	22
.209	.414838	2098	1.26955	467	2.10465	1226	2.24746	488	4.67902	2330	1.02258	23
.210	.412740	2086	1.26488	464	2.09239	1215	2.24258	486	4.65572	2309	1.02281	22
.211	.410654	2075	1.26024	462	2.08024	1204	2.23772	483	4.63263	2287	1.02303	23
.212	.408579	2062	1.25562	460	2.06820	1194	2.23289	482	4.60976	2266	1.02326	23
.213	.406517	2050	1.25102	458	2.05626	1183	2.22807	479	4.58710	2246	1.02349	23
.214	.404467	2039	1.24644	455	2.04443	1172	2.22328	478	4.56464	2225	1.02372	23
.215	.402428	2027	1.24189	453	2.03271	1163	2.21850	475	4.54239	2205	1.02395	23
.216	.400401	2015	1.23736	451	2.02108	1152	2.21375	473	4.52034	2185	1.02418	23
.217	.398386	2004	1.22285	449	2.00956	1142	2.20902	471	4.49849	2166	1.02441	23
.218	.396382	1992	1.22836	447	1.99814	1132	2.20431	469	4.47683	2146	1.02464	24
.219	.394390	1981	1.22389	444	1.98682	1122	2.19962	467	4.45537	2128	1.02488	24
.220	.392409		1.21945		1.97560		2.19495		4.43409		1.02512	

NACA

TABLE I.– CONTINUED

t	a(t)		b(t)		c(t)		d(t)		e(t)		f(t)	
.220	.392409	1870	1.21945	442	1.97560	1113	2.19495	465	4.43409	2109	1.02512	26
.221	.390439	1859	1.21503	441	1.96447	1103	2.19030	463	4.41300	2090	1.02535	24
.222	.388480	1848	1.21062	438	1.95344	1094	2.18567	461	4.39210	2072	1.02559	24
.223	.386532	1837	1.20624	436	1.94250	1084	2.18106	458	4.37138	2053	1.02583	24
.224	.384595	1827	1.20188	434	1.93166	1076	2.17647	457	4.35085	2037	1.02607	25
.225	.382668	1815	1.19754	432	1.92090	1066	2.17190	455	4.33048	2018	1.02632	24
.226	.380753	1805	1.19322	430	1.91024	1058	2.16735	454	4.31030	2001	1.02656	24
.227	.378848	1795	1.18892	428	1.89966	1046	2.16281	451	4.29029	1985	1.02680	25
.228	.376953	1784	1.18464	426	1.88918	1041	2.15830	450	4.27044	1967	1.02705	25
.229	.375069	1773	1.18038	424	1.87877	1031	2.15380	447	4.25077	1951	1.02730	25
.230	.373196	1764	1.17614	422	1.86846	1023	2.14933	446	4.23126	1934	1.02755	25
.231	.371332	1753	1.17192	421	1.85823	1015	2.14487	444	4.21192	1918	1.02780	25
.232	.369479	1746	1.16771	418	1.84808	1006	2.14043	442	4.19274	1902	1.02805	25
.233	.367636	1733	1.16353	416	1.83802	998	2.13601	441	4.17372	1886	1.02830	26
.234	.365803	1723	1.15937	415	1.82803	990	2.13160	438	4.15486	1871	1.02856	25
.235	.363980	1713	1.15522	413	1.81813	983	2.12722	437	4.13615	1855	1.02881	26
.236	.362167	1703	1.15109	411	1.80830	974	2.12285	436	4.11760	1840	1.02907	26
.237	.360364	1694	1.14698	409	1.79856	967	2.11849	433	4.09920	1825	1.02933	25
.238	.358570	1684	1.14289	407	1.78889	959	2.11416	432	4.08095	1811	1.02958	27
.239	.356786	1675	1.13882	405	1.77930	952	2.10984	430	4.06284	1795	1.02985	26
.240	.355011	1665	1.13477	404	1.76978	944	2.10554	428	4.04489	1782	1.03011	26
.241	.353246	1656	1.13073	402	1.76034	937	2.10126	427	4.02707	1766	1.03037	26
.242	.351490	1646	1.12671	400	1.75097	930	2.09699	425	4.00941	1753	1.03063	27
.243	.349744	1637	1.12271	398	1.74167	922	2.09274	423	3.99188	1739	1.03090	27
.244	.348007	1628	1.11873	396	1.73245	916	2.08851	422	3.97449	1725	1.03117	26
.245	.346279	1618	1.11477	395	1.72329	908	2.08429	420	3.95724	1712	1.03143	27
.246	.344561	1610	1.11082	394	1.71421	901	2.08009	419	3.94012	1698	1.03170	28
.247	.342851	1601	1.10688	391	1.70520	895	2.07590	417	3.92314	1685	1.03198	27
.248	.341150	1592	1.10297	390	1.69625	888	2.07173	415	3.90629	1672	1.03225	27
.249	.339458	1583	1.09907	388	1.68737	881	2.06758	414	3.88957	1659	1.03252	28
.250	.337775	1574	1.09519	386	1.67856	874	2.06344	413	3.87298	1646	1.03280	27
.251	.336101	1565	1.09133	385	1.66982	868	2.05931	410	3.85652	1633	1.03307	28
.252	.334436	1557	1.08748	385	1.66114	862	2.05521	410	3.84019	1621	1.03335	28
.253	.332779	1548	1.08365	382	1.65252	855	2.05111	408	3.82398	1608	1.03363	28
.254	.331131	1540	1.07983	380	1.64397	849	2.04703	406	3.80789	1596	1.03391	28
.255	.329491	1531	1.07603	378	1.63548	842	2.04297	405	3.79193	1585	1.03419	28
.256	.327860	1523	1.07225	377	1.62706	837	2.03892	403	3.77608	1572	1.03447	29
.257	.326237	1515	1.06848	375	1.61869	830	2.03489	402	3.76036	1561	1.03476	28
.258	.324622	1506	1.06473	374	1.61039	824	2.03087	400	3.74475	1549	1.03504	29
.259	.323016	1498	1.06099	372	1.60215	818	2.02687	398	3.72926	1538	1.03533	29
.260	.321418	1490	1.05727	371	1.59397	813	2.02288	398	3.71388	1526	1.03562	29
.261	.319828	1482	1.05356	368	1.58584	806	2.01890	396	3.69862	1515	1.03591	29
.262	.318246	1474	1.04987	368	1.57778	801	2.01494	395	3.68347	1504	1.03620	29
.263	.316672	1465	1.04619	366	1.56977	795	2.01099	393	3.66843	1493	1.03649	29
.264	.315107	1458	1.04253	364	1.56182	790	2.00706	393	3.65350	1483	1.03678	30
.265	.313549	1450	1.03889	363	1.55392	784	2.00313	390	3.63867	1471	1.03708	29
.266	.311999	1442	1.03526	362	1.54608	778	1.99923	389	3.62396	1461	1.03737	30
.267	.310457	1435	1.03164	360	1.53830	773	1.99534	388	3.60935	1450	1.03767	30
.268	.308922	1427	1.02804	359	1.53057	768	1.99146	387	3.59485	1440	1.03797	30
.269	.307395	1419	1.02445	357	1.52289	762	1.98759	385	3.58045	1430	1.03827	30
.270	.305876	1411	1.02088	356	1.51527	757	1.98374	384	3.56615	1420	1.03857	31
.271	.304365	1404	1.01732	355	1.50770	752	1.97990	383	3.55195	1409	1.03888	30
.272	.302861	1397	1.01377	355	1.50018	746	1.97607	382	3.53786	1400	1.03918	31
.273	.301364	1389	1.01024	352	1.49272	742	1.97225	380	3.52386	1390	1.03949	30
.274	.299875	1381	1.00672	350	1.48530	736	1.96845	378	3.50996	1380	1.03979	31
.275	.298394	1375	1.00322	348	1.47794	731	1.96467	378	3.49616	1370	1.04010	31
.276	.296919	1368	.999731	3475	1.47063	727	1.96089	378	3.48246	1362	1.04041	31
.277	.295453	1360	.996256	3482	1.46336	722	1.95713	376	3.46884	1351	1.04072	32
.278	.293993	1353	.992794	3449	1.45614	716	1.95337	376	3.45533	1343	1.04104	31
.279	.292540	1345	.989345	3435	1.44898	712	1.94964	373	3.44190	1333	1.04135	32
.280	.291095		.985910		1.44186		1.94591		3.42857		1.04167	

NACA

TABLE I.– CONTINUED

t	a(t)		b(t)		c(t)		d(t)		e(t)		f(t)	
.280	.291095	1439	.985910	3422	1.44186	707	1.94591	371	3.42857	1324	1.04167	31
.281	.289656	1431	.982488	3408	1.43479	703	1.94220	371	3.41533	1315	1.04198	32
.282	.288225	1424	.979079	3395	1.42776	698	1.93849	369	3.40218	1306	1.04230	32
.283	.286801	1417	.975684	3383	1.42078	693	1.93480	367	3.38912	1298	1.04262	32
.284	.285384	1411	.972301	3370	1.41385	689	1.93113	367	3.37614	1289	1.04294	33
.285	.283973	1403	.968931	3356	1.40696	684	1.92746	368	3.36325	1280	1.04327	32
.286	.282570	1397	.965575	3344	1.40012	679	1.92380	364	3.35045	1271	1.04359	33
.287	.281173	1390	.962231	3332	1.39333	676	1.92016	363	3.33774	1263	1.04392	32
.288	.279783	1383	.958899	3319	1.38657	671	1.91653	362	3.32511	1255	1.04424	33
.289	.278400	1377	.955580	3306	1.37986	666	1.91291	361	3.31256	1247	1.04457	33
.290	.277023	1370	.952274	3294	1.37320	663	1.90930	360	3.30009	1238	1.04490	33
.291	.275653	1363	.948980	3281	1.36657	658	1.90570	358	3.28771	1230	1.04523	34
.292	.274290	1357	.945699	3270	1.35999	654	1.90212	358	3.27541	1223	1.04557	33
.293	.272933	1350	.942429	3257	1.35345	648	1.89854	356	3.26318	1214	1.04590	34
.294	.271583	1343	.939172	3245	1.34696	646	1.89498	356	3.25104	1207	1.04624	34
.295	.270240	1338	.935927	3233	1.34050	641	1.89142	354	3.23897	1198	1.04658	33
.296	.268902	1331	.932694	3221	1.33409	638	1.88788	353	3.22699	1191	1.04691	34
.297	.267571	1324	.929473	3209	1.32771	633	1.88435	352	3.21508	1184	1.04725	35
.298	.266247	1318	.926264	3197	1.32138	630	1.88083	351	3.20324	1176	1.04760	34
.299	.264929	1312	.923067	3186	1.31508	625	1.87732	350	3.19148	1168	1.04794	34
.300	.263617	1306	.919881	3174	1.30883	622	1.87382	348	3.17980	1161	1.04828	35
.301	.262311	1300	.916707	3162	1.30261	618	1.87033	348	3.16819	1154	1.04863	35
.302	.261011	1293	.913545	3151	1.29643	614	1.86685	347	3.15665	1147	1.04898	35
.303	.259718	1287	.910394	3140	1.29029	610	1.86338	345	3.14518	1138	1.04933	35
.304	.258431	1281	.907254	3128	1.28419	607	1.85993	345	3.13379	1132	1.04968	35
.305	.257150	1275	.904126	3117	1.27812	603	1.85648	344	3.12247	1126	1.05003	36
.306	.255875	1270	.901009	3105	1.27209	599	1.85304	343	3.11121	1118	1.05039	35
.307	.254605	1263	.897904	3095	1.26610	596	1.84961	341	3.10003	1111	1.05074	36
.308	.253342	1257	.894809	3083	1.26014	592	1.84620	341	3.08892	1105	1.05110	36
.309	.252085	1251	.891726	3073	1.25422	588	1.84279	340	3.07787	1098	1.05146	36
.310	.250834	1246	.888653	3061	1.24834	585	1.83939	339	3.06689	1091	1.05182	36
.311	.249588	1239	.885592	3051	1.24249	581	1.83600	338	3.05598	1085	1.05218	36
.312	.248349	1234	.882541	3039	1.23668	578	1.83262	337	3.04513	1077	1.05254	37
.313	.247115	1228	.879502	3029	1.23090	575	1.82925	335	3.03436	1072	1.05291	36
.314	.245887	1222	.876473	3018	1.22515	571	1.82590	335	3.02364	1065	1.05327	37
.315	.244665	1217	.873454	3007	1.21944	567	1.82255	334	3.01299	1059	1.05364	37
.316	.243448	1211	.870447	2997	1.21377	565	1.81921	333	3.00240	1052	1.05401	37
.317	.242237	1205	.867450	2987	1.20812	561	1.81588	333	2.99188	1046	1.05438	37
.318	.241032	1200	.864463	2976	1.20251	558	1.81255	331	2.98142	1040	1.05475	38
.319	.239832	1194	.861487	2966	1.19693	554	1.80924	330	2.97102	1034	1.05513	37
.320	.238638	1189	.858521	2956	1.19139	551	1.80594	330	2.96068	1028	1.05550	38
.321	.237449	1183	.855565	2945	1.18588	548	1.80264	328	2.95040	1021	1.05588	38
.322	.236266	1177	.852620	2935	1.18040	545	1.79936	328	2.94019	1016	1.05626	38
.323	.235089	1173	.849685	2925	1.17495	542	1.79608	328	2.93003	1010	1.05664	38
.324	.233916	1166	.846760	2915	1.16953	539	1.79282	326	2.91993	1004	1.05702	38
.325	.232750	1162	.843845	2906	1.16414	535	1.78956	325	2.90989	998	1.05740	39
.326	.231588	1156	.840940	2895	1.15879	533	1.78631	324	2.89991	993	1.05779	38
.327	.230432	1151	.838045	2885	1.15346	530	1.78307	323	2.88998	987	1.05817	39
.328	.229281	1145	.835160	2875	1.14816	526	1.77984	323	2.88011	981	1.05856	39
.329	.228136	1141	.832285	2865	1.14290	524	1.77661	321	2.87030	976	1.05895	39
.330	.226995	1135	.829420	2856	1.13766	520	1.77340	321	2.86055	970	1.05934	40
.331	.225860	1130	.826564	2846	1.13246	518	1.77019	319	2.85085	965	1.05974	39
.332	.224730	1124	.823718	2837	1.12728	515	1.76700	319	2.84120	959	1.06013	40
.333	.223606	1120	.820881	2828	1.12213	512	1.76381	318	2.83161	954	1.06053	40
.334	.222486	1114	.818055	2818	1.11701	509	1.76063	317	2.82207	948	1.06093	40
.335	.221372	1110	.815237	2808	1.11192	506	1.75746	317	2.81259	943	1.06133	40
.336	.220262	1104	.812429	2798	1.10686	504	1.75429	315	2.80316	938	1.06173	40
.337	.219158	1099	.809631	2789	1.10182	500	1.75114	315	2.79378	932	1.06213	40
.338	.218059	1095	.806842	2780	1.09682	498	1.74799	314	2.78446	928	1.06253	41
.339	.216964	1089	.804062	2771	1.09184	495	1.74485	313	2.77518	922	1.06294	41
.340	.215875		.801291		1.08689		1.74172		2.76596		1.06335	41

NACA

TABLE I.– CONTINUED

t	a(t)		b(t)		c(t)		d(t)		e(t)		f(t)	
.340	.215875	1084	.801291	2761	1.08689	493	1.74172	316	2.76596	916	1.06335	41
.341	.214791	1080	.798530	2752	1.08196	490	1.73859	311	2.75678	912	1.06376	41
.342	.213711	1075	.795778	2743	1.07706	487	1.73548	311	2.74766	907	1.06417	41
.343	.212636	1069	.793035	2734	1.07219	484	1.73237	310	2.73859	903	1.06458	42
.344	.211567	1065	.790301	2725	1.06735	482	1.72927	308	2.72956	897	1.06500	41
.345	.210502	1060	.787576	2717	1.06253	479	1.72618	309	2.72059	893	1.06541	42
.346	.209442	1056	.784859	2707	1.05774	477	1.72309	307	2.71166	888	1.06583	42
.347	.208386	1050	.782152	2698	1.05297	474	1.72002	307	2.70278	883	1.06625	42
.348	.207336	1046	.779454	2690	1.04823	472	1.71695	306	2.69395	878	1.06667	43
.349	.206290	1041	.776764	2680	1.04351	468	1.71389	306	2.68517	874	1.06710	42
.350	.205249	1037	.774084	2673	1.03882	467	1.71083	304	2.67643	869	1.06752	43
.351	.204212	1032	.771411	2663	1.03415	464	1.70779	304	2.66774	865	1.06795	43
.352	.203180	1027	.768748	2655	1.02951	462	1.70475	303	2.65909	860	1.06838	43
.353	.202153	1023	.766093	2646	1.02489	459	1.70172	302	2.65049	855	1.06881	43
.354	.201130	1018	.763447	2638	1.02030	457	1.69870	302	2.64194	851	1.06924	43
.355	.200112	1015	.760809	2629	1.01573	454	1.69568	301	2.63343	847	1.06967	44
.356	.199099	1009	.758180	2621	1.01119	453	1.69267	301	2.62496	842	1.07011	43
.357	.198090	1004	.755559	2612	1.00666	449	1.68966	299	2.61654	838	1.07054	44
.358	.197086	1000	.752947	2604	1.00217	448	1.68667	298	2.60816	833	1.07098	44
.359	.196086	996	.750343	2596	.997692	4451	1.68368	298	2.59983	830	1.07142	45
.360	.195090	991	.747747	2587	.993241	4428	1.68070	297	2.59153	824	1.07187	44
.361	.194099	986	.745160	2579	.988813	4406	1.67773	297	2.58329	821	1.07231	45
.362	.193113	983	.742581	2571	.984407	4382	1.67476	296	2.57508	817	1.07276	44
.363	.192130	977	.740010	2563	.980025	4361	1.67180	295	2.56691	812	1.07320	45
.364	.191153	974	.737447	2555	.975664	4338	1.66885	295	2.55879	808	1.07365	46
.365	.190179	969	.734892	2548	.971326	4316	1.66590	294	2.55071	805	1.07411	45
.366	.189210	965	.732346	2538	.967010	4294	1.66296	293	2.54266	800	1.07456	45
.367	.188245	960	.729807	2531	.962716	4273	1.66003	293	2.53466	796	1.07501	46
.368	.187285	957	.727276	2522	.958443	4250	1.65710	292	2.52670	792	1.07547	46
.369	.186328	952	.724754	2515	.954193	4230	1.65418	291	2.51878	788	1.07593	46
.370	.185376	948	.722239	2507	.949963	4208	1.65127	291	2.51090	785	1.07639	46
.371	.184428	943	.719732	2499	.945755	4187	1.64836	289	2.50305	780	1.07685	47
.372	.183485	940	.717233	2492	.941568	4166	1.64547	290	2.49525	777	1.07732	46
.373	.182545	935	.714741	2483	.937402	4145	1.64257	288	2.48748	772	1.07778	47
.374	.181610	931	.712258	2476	.933257	4125	1.63969	288	2.47976	768	1.07825	47
.375	.180679	927	.709782	2469	.929132	4104	1.63681	288	2.47207	765	1.07872	47
.376	.179752	923	.707313	2460	.925028	4084	1.63393	286	2.46442	762	1.07919	47
.377	.178829	918	.704853	2453	.920944	4064	1.63107	286	2.45680	758	1.07966	48
.378	.177910	915	.702400	2446	.916880	4044	1.62821	286	2.44922	754	1.08014	48
.379	.176995	911	.699954	2438	.912836	4024	1.62535	285	2.44168	750	1.08062	48
.380	.176084	907	.697516	2430	.908812	4004	1.62250	284	2.43418	747	1.08110	48
.381	.175177	903	.695086	2423	.904808	3985	1.61966	283	2.42671	744	1.08158	48
.382	.174274	899	.692663	2416	.900823	3965	1.61683	283	2.41927	739	1.08206	49
.383	.173375	894	.690247	2408	.896858	3946	1.61400	283	2.41188	737	1.08255	48
.384	.172481	891	.687839	2401	.892912	3927	1.61117	282	2.40451	732	1.08303	49
.385	.171590	887	.685438	2393	.888985	3908	1.60835	281	2.39719	729	1.08352	49
.386	.170703	883	.683045	2386	.885077	3889	1.60554	280	2.38990	727	1.08401	48
.387	.169820	880	.680659	2379	.881188	3871	1.60274	280	2.38263	722	1.08450	50
.388	.168940	875	.678280	2372	.877317	3852	1.59994	279	2.37541	719	1.08500	50
.389	.168065	872	.675908	2365	.873465	3833	1.59715	279	2.36822	716	1.08550	49
.390	.167193	867	.673543	2357	.869632	3815	1.59436	278	2.36106	712	1.08599	51
.391	.166326	864	.671186	2351	.865817	3797	1.59158	278	2.35394	708	1.08650	50
.392	.165462	860	.668835	2343	.862020	3779	1.58880	277	2.34685	706	1.08700	50
.393	.164602	857	.666492	2336	.858241	3761	1.58603	276	2.33979	702	1.08750	51
.394	.163745	852	.664156	2330	.854480	3743	1.58327	276	2.33277	698	1.08801	51
.395	.162893	849	.661826	2322	.850737	3725	1.58051	276	2.32578	697	1.08852	51
.396	.162044	845	.659504	2315	.847012	3708	1.57775	274	2.31881	692	1.08903	51
.397	.161199	842	.657189	2309	.843304	3690	1.57501	274	2.31189	690	1.08954	51
.398	.160357	838	.654880	2301	.839614	3674	1.57227	274	2.30499	687	1.09005	52
.399	.159519	834	.652579	2295	.835940	3656	1.56953	273	2.29812	683	1.09057	52
.400	.158685		.650284		.832284		1.56680		2.29129		1.09109	

NACA

TABLE I.— CONTINUED

t	a(t)		b(t)		c(t)		d(t)		e(t)		f(t)	
.400	.158685	831	.650284	2288	.832284	3639	1.56680	273	2.29129	681	1.09109	52
.401	.157854	826	.647996	2281	.828645	3622	1.56407	272	2.28448	677	1.09161	52
.402	.157028	823	.645715	2274	.825023	3605	1.56135	271	2.27771	674	1.09213	53
.403	.156205	820	.643441	2268	.821418	3588	1.55864	271	2.27097	672	1.09266	52
.404	.155385	816	.641173	2261	.817829	3572	1.55593	270	2.26425	668	1.09318	53
.405	.154569	812	.638912	2254	.814257	3555	1.55323	270	2.25757	665	1.09371	53
.406	.153757	808	.636658	2248	.810702	3540	1.55053	269	2.25092	662	1.09424	54
.407	.152948	806	.634410	2241	.807162	3523	1.54784	268	2.24430	660	1.09478	53
.408	.152142	802	.632169	2234	.803639	3506	1.54515	268	2.23770	656	1.09531	54
.409	.151340	798	.629935	2228	.800133	3491	1.54247	268	2.23114	654	1.09585	54
.410	.150542	795	.627707	2221	.796642	3475	1.53979	267	2.22460	651	1.09639	54
.411	.149747	791	.625486	2215	.793167	3459	1.53712	267	2.21809	648	1.09693	54
.412	.148956	788	.623271	2208	.789708	3444	1.53445	266	2.21161	645	1.09747	55
.413	.148168	785	.621062	2201	.786264	3427	1.53179	265	2.20516	642	1.09802	55
.414	.147383	781	.618861	2196	.782837	3412	1.52914	265	2.19874	640	1.09857	55
.415	.146602	778	.616665	2189	.779424	3397	1.52649	265	2.19234	637	1.09912	55
.416	.145824	774	.614476	2183	.776027	3381	1.52384	264	2.18597	634	1.09967	55
.417	.145050	771	.612293	2176	.772646	3367	1.52120	264	2.17963	631	1.10022	56
.418	.144279	768	.610117	2171	.769279	3351	1.51856	263	2.17332	629	1.10078	56
.419	.143511	764	.607946	2164	.765928	3336	1.51593	262	2.16703	626	1.10134	56
.420	.142747	761	.605782	2157	.762592	3322	1.51331	262	2.16077	623	1.10190	56
.421	.141986	757	.603625	2152	.759270	3307	1.51069	262	2.15454	621	1.10246	57
.422	.141229	755	.601473	2145	.755963	3292	1.50807	261	2.14833	618	1.10303	56
.423	.140474	751	.599328	2139	.752671	3278	1.50546	261	2.14215	615	1.10359	57
.424	.139723	748	.597189	2133	.749393	3263	1.50285	260	2.13600	612	1.10416	58
.425	.138975	744	.595056	2127	.746130	3248	1.50025	260	2.12987	611	1.10474	57
.426	.138231	741	.592929	2120	.742882	3235	1.49765	259	2.12376	607	1.10531	58
.427	.137490	738	.590809	2115	.739647	3220	1.49506	259	2.11769	606	1.10589	57
.428	.136752	735	.588694	2109	.736427	3206	1.49247	258	2.11163	603	1.10646	59
.429	.136017	732	.586585	2102	.733221	3192	1.48989	258	2.10560	600	1.10705	58
.430	.135285	728	.584483	2097	.730029	3178	1.48731	257	2.09960	598	1.10763	59
.431	.134557	726	.582386	2091	.726851	3164	1.48474	257	2.09362	595	1.10822	58
.432	.133831	722	.580295	2084	.723687	3151	1.48217	257	2.08767	593	1.10880	59
.433	.133109	719	.578211	2079	.720536	3137	1.47960	256	2.08174	590	1.10939	58
.434	.132390	715	.576132	2073	.717399	3123	1.47704	255	2.07584	588	1.10998	60
.435	.131675	713	.574059	2067	.714276	3110	1.47449	255	2.06995	585	1.11058	60
.436	.130962	710	.571992	2061	.711166	3096	1.47194	255	2.06410	584	1.11118	60
.437	.130252	706	.569931	2055	.708070	3083	1.46939	254	2.05826	581	1.11178	60
.438	.129546	704	.567876	2050	.704987	3070	1.46685	254	2.05245	578	1.11238	60
.439	.128842	700	.565826	2044	.701917	3056	1.46431	253	2.04667	577	1.11298	61
.440	.128142	698	.563782	2038	.698861	3044	1.46178	253	2.04090	574	1.11359	61
.441	.127444	694	.561744	2032	.695817	3031	1.45925	252	2.03516	571	1.11420	61
.442	.126750	691	.559712	2027	.692786	3017	1.45673	252	2.02945	570	1.11481	61
.443	.126059	688	.557685	2021	.689769	3005	1.45421	252	2.02375	567	1.11542	62
.444	.125371	686	.555664	2015	.686764	2992	1.45169	251	2.01808	565	1.11604	62
.445	.124685	682	.553649	2008	.683772	2980	1.44918	251	2.01243	563	1.11666	62
.446	.124003	678	.551640	2005	.680792	2967	1.44667	250	2.00680	561	1.11728	62
.447	.123324	677	.549635	1998	.677825	2954	1.44417	250	2.00119	558	1.11790	63
.448	.122647	673	.547637	1993	.674871	2942	1.44167	249	1.99561	556	1.11853	62
.449	.121974	670	.545644	1987	.671929	2928	1.43918	249	1.99005	554	1.11915	63
.450	.121304	668	.543657	1982	.669000	2918	1.43669	248	1.98451	552	1.11978	64
.451	.120636	665	.541675	1978	.666082	2905	1.43420	248	1.97899	550	1.12042	63
.452	.119971	661	.539699	1971	.663177	2892	1.43172	248	1.97349	548	1.12105	64
.453	.119310	659	.537728	1965	.660285	2881	1.42924	248	1.96801	545	1.12169	64
.454	.118651	656	.535763	1960	.657404	2868	1.42676	247	1.96256	544	1.12233	65
.455	.117995	653	.533803	1954	.654535	2857	1.42429	246	1.95712	541	1.12298	64
.456	.117342	650	.531849	1948	.651678	2845	1.42183	246	1.95171	539	1.12362	65
.457	.116692	648	.529900	1944	.648833	2833	1.41937	246	1.94632	538	1.12427	65
.458	.116044	645	.527956	1938	.646000	2822	1.41691	246	1.94094	535	1.12492	65
.459	.115399	641	.526018	1933	.643178	2810	1.41445	245	1.93559	533	1.12557	66
.460	.114758		.524085		.640368		1.41200		1.93026		1.12623	

NACA

TABLE I.– CONTINUED

t	a(t)		b(t)		c(t)		d(t)		e(t)		f(t)	
.460	.114758	639	.524085	1828	.640368	2788	1.41200	244	1.93026	531	1.12623	66
.461	.114119	636	.522157	1822	.637570	2787	1.40956	243	1.92495	530	1.12689	66
.462	.113483	634	.520235	1817	.634783	2775	1.40711	243	1.91965	527	1.12755	66
.463	.112849	630	.518318	1812	.632008	2764	1.40468	244	1.91438	525	1.12821	67
.464	.112219	628	.516406	1806	.629244	2753	1.40224	243	1.90913	524	1.12888	67
.465	.111591	625	.514500	1801	.626491	2741	1.39981	243	1.90389	521	1.12955	67
.466	.110966	622	.512599	1797	.623750	2731	1.39738	242	1.89868	520	1.13022	67
.467	.110343	619	.510702	1791	.621019	2719	1.39496	242	1.89348	517	1.13089	68
.468	.109724	617	.508811	1785	.618300	2708	1.39254	242	1.88831	516	1.13157	68
.469	.109107	615	.506926	1781	.615592	2697	1.39012	241	1.88315	514	1.13225	68
.470	.108492	611	.505045	1775	.612895	2687	1.38771	241	1.87801	512	1.13293	69
.471	.107881	609	.503170	1771	.610208	2675	1.38530	240	1.87289	510	1.13362	68
.472	.107272	606	.501299	1765	.607533	2665	1.38290	240	1.86779	508	1.13430	69
.473	.106666	604	.499434	1760	.604868	2654	1.38050	240	1.86271	506	1.13499	70
.474	.106062	601	.497574	1755	.602214	2643	1.37810	240	1.85765	505	1.13569	69
.475	.105461	598	.495719	1750	.599571	2633	1.37570	239	1.85260	503	1.13638	70
.476	.104863	596	.493869	1745	.596938	2622	1.37331	238	1.84757	501	1.13708	70
.477	.104267	593	.492024	1740	.594316	2611	1.37093	239	1.84256	499	1.13778	70
.478	.103674	590	.490184	1735	.591705	2602	1.36854	238	1.83757	497	1.13848	71
.479	.103084	588	.488349	1731	.589103	2591	1.36616	237	1.83260	495	1.13919	71
.480	.102496	585	.486518	1725	.586512	2580	1.36379	238	1.82764	494	1.13990	71
.481	.101911	583	.484693	1720	.583932	2570	1.36141	237	1.82270	492	1.14061	72
.482	.101328	580	.482873	1715	.581362	2560	1.35904	236	1.81778	490	1.14133	72
.483	.100748	577	.481058	1711	.578802	2550	1.35668	236	1.81288	489	1.14205	72
.484	.100171	575	.479247	1705	.576252	2540	1.35432	236	1.80799	487	1.14277	72
.485	.0995958	5724	.477442	1701	.573712	2530	1.35196	236	1.80312	485	1.14349	73
.486	.0990234	5700	.475641	1696	.571182	2520	1.34960	235	1.79827	484	1.14422	73
.487	.0984534	5674	.473845	1691	.568662	2510	1.34725	235	1.79343	482	1.14495	73
.488	.0978860	5649	.472054	1686	.566152	2500	1.34490	235	1.78861	480	1.14568	74
.489	.0973211	5624	.470268	1681	.563652	2490	1.34255	234	1.78381	478	1.14642	73
.490	.0967587	5599	.468487	1677	.561162	2481	1.34021	234	1.77903	477	1.14715	73
.491	.0961988	5575	.466710	1672	.558681	2471	1.33787	234	1.77426	475	1.14790	74
.492	.0956413	5549	.464938	1667	.556210	2461	1.33553	233	1.76950	473	1.14864	75
.493	.0950864	5525	.463171	1662	.553749	2452	1.33320	233	1.76477	471	1.14939	75
.494	.0945339	5501	.461409	1658	.551297	2442	1.33087	233	1.76004	470	1.15014	75
.495	.0939838	5477	.459651	1653	.548855	2432	1.32854	232	1.75534	469	1.15089	75
.496	.0934361	5452	.457898	1648	.546423	2424	1.32622	232	1.75065	467	1.15164	76
.497	.0928909	5428	.456150	1644	.543999	2415	1.32390	232	1.74598	466	1.15240	77
.498	.0923481	5403	.454406	1639	.541586	2405	1.32158	231	1.74132	464	1.15317	76
.499	.0918078	5380	.452667	1634	.539181	2395	1.31927	231	1.73668	463	1.15393	77
.500	.0912698	5356	.450933	1630	.536786	2388	1.31696	231	1.73205	461	1.15470	77
.501	.0907342	5332	.449203	1625	.534400	2377	1.31465	230	1.72744	460	1.15547	78
.502	.0902010	5309	.447478	1621	.532023	2367	1.31235	231	1.72284	458	1.15625	77
.503	.0896701	5284	.445757	1616	.529656	2359	1.31004	230	1.71826	456	1.15702	78
.504	.0891417	5262	.444041	1611	.527297	2349	1.30774	229	1.71370	455	1.15780	79
.505	.0886155	5238	.442330	1607	.524948	2341	1.30545	229	1.70915	454	1.15859	79
.506	.0880917	5214	.440623	1603	.522607	2331	1.30316	229	1.70461	452	1.15938	78
.507	.0875703	5191	.438920	1597	.520276	2323	1.30087	229	1.70009	451	1.16016	80
.508	.0870512	5168	.437223	1594	.517953	2314	1.29858	228	1.69558	449	1.16096	80
.509	.0865344	5145	.435529	1589	.515639	2305	1.29630	229	1.69109	447	1.16176	79
.510	.0860199	5122	.433840	1584	.513334	2296	1.29401	227	1.68662	447	1.16255	81
.511	.0855077	5099	.432156	1580	.511038	2287	1.29174	228	1.68215	444	1.16336	80
.512	.0849978	5076	.430476	1575	.508751	2279	1.28946	227	1.67771	444	1.16416	81
.513	.0844902	5053	.428801	1571	.506472	2270	1.28719	227	1.67327	442	1.16497	82
.514	.0839849	5031	.427130	1567	.504202	2262	1.28492	227	1.66885	440	1.16579	81
.515	.0834818	5008	.425463	1562	.501940	2253	1.28265	226	1.66445	439	1.16660	82
.516	.0829810	4986	.423801	1558	.499687	2244	1.28039	226	1.66006	438	1.16742	82
.517	.0824824	4963	.422143	1554	.497443	2236	1.27813	226	1.65568	437	1.16824	83
.518	.0819861	4941	.420489	1549	.495207	2228	1.27587	226	1.65131	435	1.16907	83
.519	.0814920	4918	.418840	1545	.492979	2219	1.27361	225	1.64696	433	1.16990	83
.520	.0810001		.417195		.490760		1.27136		1.64263		1.17073	

NACA

TABLE I.— CONTINUED

t	a(t)		b(t)		c(t)		d(t)		e(t)		f(t)	
.520	.0810001	4896	.417195	1640	.490760	2211	1.27136	225	1.64263	433	1.17073	84
.521	.0805105	4875	.415555	1636	.488549	2208	1.26911	228	1.63830	430	1.17157	84
.522	.0800230	4852	.413919	1632	.486346	2184	1.26686	224	1.63400	430	1.17241	84
.523	.0795378	4830	.412287	1628	.484162	2187	1.26462	224	1.62970	428	1.17325	85
.524	.0790548	4809	.410659	1628	.481965	2178	1.26238	224	1.62542	427	1.17410	85
.525	.0785739	4787	.409036	1619	.479787	2170	1.26014	224	1.62115	426	1.17495	85
.526	.0780952	4766	.407417	1615	.477617	2162	1.25790	223	1.61689	424	1.17580	86
.527	.0776186	4745	.405802	1610	.475455	2153	1.25567	223	1.61265	423	1.17666	86
.528	.0771443	4723	.404192	1607	.473302	2146	1.25344	223	1.60842	422	1.17752	86
.529	.0766720	4701	.402585	1602	.471156	2138	1.25121	223	1.60420	420	1.17838	87
.530	.0762019	4679	.400983	1598	.469018	2130	1.24898	222	1.60000	420	1.17925	87
.531	.0757340	4658	.399385	1593	.466888	2122	1.24676	222	1.59580	418	1.18012	87
.532	.0752682	4633	.397792	1590	.464766	2114	1.24454	222	1.59162	416	1.18099	88
.533	.0748044	4615	.396202	1585	.462652	2107	1.24232	222	1.58746	416	1.18187	88
.534	.0743429	4595	.394617	1581	.460545	2099	1.24010	221	1.58330	414	1.18275	89
.535	.0738834	4574	.393036	1578	.458446	2090	1.23789	221	1.57916	413	1.18364	89
.536	.0734260	4554	.391458	1573	.456356	2084	1.23568	221	1.57503	411	1.18453	89
.537	.0729706	4532	.389885	1568	.454272	2075	1.23347	221	1.57092	411	1.18542	90
.538	.0725174	4512	.388317	1565	.452197	2068	1.23126	220	1.56681	408	1.18632	90
.539	.0720662	4490	.386752	1561	.450129	2061	1.22906	220	1.56272	408	1.18722	90
.540	.0716172	4471	.385191	1557	.448068	2053	1.22686	220	1.55864	407	1.18812	91
.541	.0711701	4450	.383634	1552	.446015	2045	1.22466	220	1.55457	406	1.18903	91
.542	.0707251	4429	.382082	1548	.443970	2038	1.22246	219	1.55051	404	1.18994	92
.543	.0702822	4410	.380534	1545	.441932	2030	1.22027	220	1.54647	403	1.19086	91
.544	.0698412	4388	.378989	1540	.439902	2023	1.21807	219	1.54244	403	1.19177	93
.545	.0694024	4369	.377449	1537	.437879	2016	1.21588	218	1.53841	401	1.19270	92
.546	.0689655	4349	.375912	1532	.435863	2008	1.21370	219	1.53440	399	1.19362	93
.547	.0685306	4328	.374380	1529	.433855	2001	1.21151	218	1.53041	399	1.19455	94
.548	.0680978	4309	.372851	1524	.431854	1994	1.20933	218	1.52642	398	1.19549	94
.549	.0676669	4288	.371327	1521	.429860	1987	1.20715	218	1.52244	396	1.19643	94
.550	.0672381	4269	.369806	1516	.427873	1979	1.20497	217	1.51848	395	1.19737	94
.551	.0668112	4249	.368290	1513	.425894	1972	1.20280	218	1.51453	394	1.19831	95
.552	.0663863	4230	.366777	1508	.423922	1965	1.20062	217	1.51059	393	1.19926	96
.553	.0659633	4209	.365269	1505	.421957	1958	1.19845	217	1.50666	392	1.20022	96
.554	.0655424	4181	.363764	1501	.419999	1951	1.19628	217	1.50274	391	1.20118	96
.555	.0651233	4171	.362263	1497	.418048	1944	1.19411	216	1.49883	390	1.20214	96
.556	.0647062	4151	.360766	1492	.416104	1936	1.19195	216	1.49493	389	1.20310	98
.557	.0642911	4132	.359274	1490	.414168	1930	1.18979	217	1.49104	387	1.20408	97
.558	.0638779	4113	.357784	1485	.412238	1923	1.18762	215	1.48717	387	1.20505	98
.559	.0634666	4093	.356299	1481	.410315	1916	1.18547	216	1.48330	385	1.20603	98
.560	.0630573	4075	.354818	1478	.408399	1910	1.18331	215	1.47945	384	1.20701	99
.561	.0626498	4054	.353340	1474	.406489	1902	1.18116	216	1.47561	384	1.20800	99
.562	.0622444	4037	.351866	1469	.404587	1895	1.17900	215	1.47177	382	1.20899	99
.563	.0618407	4018	.350397	1466	.402692	1889	1.17685	215	1.46795	381	1.20998	100
.564	.0614389	3998	.348931	1462	.400803	1882	1.17470	214	1.46414	380	1.21098	101
.565	.0610390	3979	.347468	1458	.398921	1875	1.17256	214	1.46034	379	1.21199	101
.566	.0606411	3961	.346010	1455	.397046	1868	1.17042	215	1.45655	379	1.21300	101
.567	.0602450	3943	.344555	1451	.395177	1862	1.16827	214	1.45276	377	1.21401	101
.568	.0598507	3924	.343104	1447	.393315	1855	1.16613	214	1.44899	376	1.21502	102
.569	.0594583	3905	.341657	1443	.391460	1849	1.16399	213	1.44523	375	1.21604	103
.570	.0590678	3887	.340214	1440	.389611	1842	1.16186	214	1.44148	374	1.21707	103
.571	.0586791	3868	.338774	1436	.387769	1835	1.15972	213	1.43774	373	1.21810	104
.572	.0582922	3850	.337338	1432	.385934	1830	1.15759	213	1.43401	372	1.21914	103
.573	.0579072	3832	.335906	1428	.384104	1822	1.15546	213	1.43029	371	1.22017	105
.574	.0575240	3813	.334478	1425	.382282	1816	1.15333	212	1.42658	370	1.22122	104
.575	.0571427	3796	.333053	1421	.380466	1810	1.15121	213	1.42288	370	1.22226	106
.576	.0567631	3777	.331632	1417	.378656	1803	1.14908	212	1.41918	368	1.22332	105
.577	.0563854	3760	.330215	1414	.376853	1797	1.14696	212	1.41550	367	1.22437	106
.578	.0560094	3742	.328801	1410	.375056	1791	1.14484	212	1.41183	367	1.22543	107
.579	.0556352	3725	.327391	1406	.373265	1784	1.14272	212	1.40816	365	1.22650	107
.580	.0552629		.325985		.371481		1.14060		1.40451		1.22757	

NACA

TABLE I.– CONTINUED

t	a(t)		b(t)		c(t)		d(t)		e(t)		f(t)	
.580	.0552629	3706	.325985	1403	.371481	1778	1.14060	211	1.40451	384	1.22757	108
.581	.0548923	3688	.324582	1399	.369703	1771	1.13849	212	1.40067	384	1.22865	108
.582	.0545235	3671	.323183	1395	.367932	1766	1.13637	211	1.39723	382	1.22973	108
.583	.0541564	3653	.321788	1392	.366166	1759	1.13426	211	1.39361	382	1.23081	109
.584	.0537911	3635	.320396	1388	.364407	1753	1.13215	211	1.38999	381	1.23190	110
.585	.0534276	3618	.319008	1385	.362654	1747	1.13004	211	1.38638	380	1.23300	109
.586	.0530658	3600	.317623	1381	.360907	1741	1.12793	210	1.38278	378	1.23409	111
.587	.0527058	3583	.316242	1377	.359166	1734	1.12583	210	1.37919	378	1.23520	111
.588	.0523475	3566	.314865	1374	.357432	1728	1.12373	211	1.37561	377	1.23631	111
.589	.0519909	3548	.313491	1370	.355703	1722	1.12162	210	1.37204	376	1.23742	112
.590	.0516361	3531	.312121	1367	.353981	1717	1.11952	209	1.36848	375	1.23854	112
.591	.0512830	3514	.310754	1363	.352264	1710	1.11743	210	1.36493	375	1.23966	113
.592	.0509316	3498	.309391	1360	.350554	1705	1.11533	210	1.36138	373	1.24079	113
.593	.0505818	3480	.308031	1356	.348849	1699	1.11323	209	1.35785	373	1.24192	114
.594	.0502338	3463	.306675	1352	.347150	1692	1.11114	209	1.35432	372	1.24306	114
.595	.0498875	3446	.305323	1350	.345458	1687	1.10905	209	1.35080	371	1.24420	115
.596	.0495429	3429	.303973	1345	.343771	1681	1.10696	209	1.34729	370	1.24535	116
.597	.0492000	3413	.302628	1342	.342090	1675	1.10487	209	1.34379	370	1.24651	116
.598	.0488587	3395	.301286	1339	.340415	1669	1.10278	208	1.34029	368	1.24767	116
.599	.0485192	3380	.299947	1335	.338746	1663	1.10070	209	1.33681	368	1.24883	117
.600	.0481812	3362	.298612	1331	.337083	1658	1.09861	208	1.33333	366	1.25000	117
.601	.0478450	3346	.297281	1328	.335425	1651	1.09653	208	1.32987	366	1.25117	118
.602	.0475104	3330	.295953	1325	.333774	1646	1.09445	208	1.32641	366	1.25235	119
.603	.0471774	3312	.294628	1321	.332128	1641	1.09237	208	1.32295	364	1.25354	119
.604	.0468462	3297	.293307	1318	.330487	1634	1.09029	208	1.31951	363	1.25473	119
.605	.0465165	3281	.291989	1314	.328853	1629	1.08821	207	1.31608	363	1.25592	121
.606	.0461884	3264	.290675	1311	.327224	1623	1.08614	207	1.31265	362	1.25713	120
.607	.0458620	3248	.289364	1308	.325601	1618	1.08407	208	1.30923	361	1.25833	121
.608	.0455372	3232	.288056	1304	.323983	1612	1.08199	207	1.30582	361	1.25954	122
.609	.0452140	3215	.286752	1301	.322371	1607	1.07992	207	1.30241	359	1.26076	123
.610	.0448925	3200	.285451	1297	.320764	1601	1.07785	207	1.29902	359	1.26199	123
.611	.0445725	3183	.284154	1294	.319163	1595	1.07578	206	1.29563	358	1.26322	123
.612	.0442542	3168	.282860	1291	.317568	1590	1.07372	207	1.29225	357	1.26445	124
.613	.0439374	3152	.281569	1287	.315978	1584	1.07165	206	1.28888	357	1.26569	125
.614	.0436222	3136	.280282	1284	.314394	1579	1.06959	206	1.28551	355	1.26694	125
.615	.0433086	3120	.278998	1280	.312815	1574	1.06753	207	1.28216	355	1.26819	125
.616	.0429966	3105	.277718	1277	.311241	1568	1.06546	206	1.27881	354	1.26944	127
.617	.0426861	3089	.276441	1274	.309673	1562	1.06340	206	1.27547	354	1.27071	127
.618	.0423772	3073	.275167	1271	.308111	1557	1.06135	206	1.27213	352	1.27198	127
.619	.0420699	3058	.273896	1267	.306554	1552	1.05929	206	1.26881	352	1.27325	128
.620	.0417641	3042	.272629	1264	.305002	1547	1.05723	205	1.26549	352	1.27453	129
.621	.0414599	3027	.271365	1260	.303455	1541	1.05518	206	1.26217	350	1.27582	129
.622	.0411572	3012	.270105	1257	.301914	1536	1.05312	205	1.25887	350	1.27711	130
.623	.0408560	2996	.268848	1254	.300378	1530	1.05107	205	1.25557	329	1.27841	130
.624	.0405564	2980	.267594	1251	.298848	1526	1.04902	205	1.25228	328	1.27971	131
.625	.0402584	2966	.266343	1247	.297322	1520	1.04697	205	1.24900	328	1.28102	132
.626	.0399618	2950	.265096	1244	.295802	1515	1.04492	205	1.24572	327	1.28234	132
.627	.0396668	2936	.263852	1241	.294287	1509	1.04287	205	1.24245	326	1.28366	133
.628	.0393732	2920	.262611	1238	.292778	1505	1.04082	204	1.23919	325	1.28499	134
.629	.0390812	2905	.261373	1234	.291273	1499	1.03878	205	1.23594	325	1.28633	134
.630	.0387907	2891	.260139	1231	.289774	1494	1.03673	204	1.23269	324	1.28767	135
.631	.0385016	2875	.258908	1228	.288280	1488	1.03469	204	1.22945	323	1.28902	136
.632	.0382141	2861	.257680	1224	.286791	1484	1.03265	204	1.22622	323	1.29038	136
.633	.0379280	2845	.256456	1222	.285307	1479	1.03061	204	1.22299	322	1.29174	136
.634	.0376435	2831	.255234	1218	.283828	1473	1.02857	204	1.21977	322	1.29310	138
.635	.0373604	2818	.254016	1215	.282355	1468	1.02653	204	1.21655	320	1.29448	138
.636	.0370788	2802	.252801	1212	.280886	1464	1.02449	204	1.21335	320	1.29586	139
.637	.0367986	2787	.251589	1208	.279422	1458	1.02245	203	1.21015	320	1.29725	139
.638	.0365199	2772	.250381	1206	.277964	1454	1.02042	204	1.20695	318	1.29864	140
.639	.0362427	2758	.249175	1202	.276510	1448	1.01838	203	1.20377	318	1.30004	141
.640	.0359669		.247973		.275062		1.01635		1.20059		1.30145	

NACA

TABLE I.– CONTINUED

t	a(t)		b(t)		c(t)		d(t)		e(t)		f(t)	
.640	.0359669	2743	.247973	1199	.275062	1444	1.01635	203	1.20059	318	1.30145	141
.641	.0356926	2729	.246774	1196	.273618	1439	1.01432	204	1.19741	317	1.30286	142
.642	.0354197	2715	.245578	1192	.272179	1434	1.01228	203	1.19424	316	1.30428	143
.643	.0351482	2700	.244386	1190	.270745	1428	1.01025	203	1.19108	315	1.30571	143
.644	.0348782	2686	.243196	1186	.269317	1424	1.00822	203	1.18793	315	1.30714	145
.645	.0346096	2672	.242010	1183	.267893	1420	1.00619	203	1.18478	314	1.30859	145
.646	.0343424	2658	.240827	1180	.266473	1414	1.00416	202	1.18164	314	1.31004	145
.647	.0340766	2643	.239647	1177	.265059	1409	1.00214	203	1.17850	313	1.31149	147
.648	.0338123	2630	.238470	1174	.263650	1405	1.00011	203	1.17537	312	1.31296	146
.649	.0335493	2615	.237296	1171	.262245	1400	.998084	2025	1.17225	312	1.31442	148
.650	.0332878	2602	.236125	1167	.260845	1394	.996059	2024	1.16913	311	1.31590	149
.651	.0330276	2587	.234958	1165	.259451	1391	.994035	2023	1.16602	311	1.31739	148
.652	.0327689	2574	.233793	1161	.258060	1385	.992012	2022	1.16291	310	1.31888	150
.653	.0325115	2560	.232632	1158	.256675	1381	.989990	2022	1.15981	309	1.32038	151
.654	.0322555	2546	.231473	1155	.255294	1376	.987968	2021	1.15672	309	1.32189	151
.655	.0320009	2532	.230318	1152	.253918	1371	.985947	2020	1.15363	308	1.32340	152
.656	.0317477	2519	.229166	1148	.252547	1367	.983927	2018	1.15055	308	1.32492	153
.657	.0314958	2505	.228017	1146	.251180	1361	.981908	2018	1.14747	307	1.32645	154
.658	.0312453	2491	.226871	1143	.249819	1358	.979889	2018	1.14440	306	1.32799	154
.659	.0309962	2478	.225728	1138	.248461	1352	.977871	2017	1.14134	306	1.32953	156
.660	.0307484	2464	.224589	1137	.247109	1348	.975854	2016	1.13828	305	1.33109	156
.661	.0305020	2451	.223452	1134	.245761	1344	.973838	2016	1.13523	305	1.33265	157
.662	.0302569	2438	.222318	1131	.244417	1338	.971822	2015	1.13218	304	1.33422	157
.663	.0300131	2424	.221187	1127	.243079	1334	.969807	2015	1.12914	304	1.33579	159
.664	.0297707	2411	.220060	1125	.241745	1330	.967792	2013	1.12610	303	1.33738	159
.665	.0295296	2397	.218935	1121	.240415	1325	.965779	2014	1.12307	302	1.33897	160
.666	.0292899	2384	.217814	1119	.239090	1321	.963765	2012	1.12005	302	1.34057	161
.667	.0290515	2371	.216695	1115	.237769	1316	.961753	2012	1.11703	302	1.34218	161
.668	.0288144	2358	.215580	1113	.236453	1311	.959741	2011	1.11401	300	1.34379	163
.669	.0285786	2345	.214467	1109	.235142	1307	.957730	2011	1.11101	301	1.34542	163
.670	.0283441	2332	.213358	1107	.233835	1302	.955719	2011	1.10800	300	1.34705	165
.671	.0281109	2319	.212251	1103	.232533	1298	.953708	2009	1.10500	299	1.34870	164
.672	.0278790	2306	.211148	1101	.231235	1294	.951699	2009	1.10201	298	1.35034	166
.673	.0276484	2293	.210047	1097	.229941	1289	.949690	2009	1.09902	298	1.35200	167
.674	.0274191	2280	.208950	1095	.228652	1285	.947681	2008	1.09604	298	1.35367	168
.675	.0271911	2267	.207855	1092	.227367	1280	.945673	2008	1.09306	297	1.35535	168
.676	.0269644	2255	.206763	1088	.226087	1276	.943665	2007	1.09009	297	1.35703	170
.677	.0267389	2241	.205675	1086	.224811	1272	.941658	2007	1.08712	296	1.35873	170
.678	.0265148	2228	.204589	1082	.223539	1267	.939651	2006	1.08416	295	1.36043	171
.679	.0262919	2217	.203507	1080	.222272	1263	.937645	2006	1.08121	296	1.36214	172
.680	.0260702	2204	.202427	1077	.221009	1258	.935639	2006	1.07825	294	1.36386	173
.681	.0258498	2191	.201350	1074	.219751	1254	.933633	2005	1.07531	295	1.36559	174
.682	.0256307	2179	.200276	1071	.218497	1250	.931628	2004	1.07236	293	1.36733	175
.683	.0254128	2166	.199205	1068	.217247	1246	.929624	2005	1.06943	294	1.36908	176
.684	.0251962	2154	.198137	1065	.216001	1241	.927619	2004	1.06649	292	1.37084	176
.685	.0249808	2141	.197072	1062	.214760	1237	.925615	2003	1.06357	293	1.37260	178
.686	.0247667	2129	.196010	1059	.213523	1233	.923612	2004	1.06064	291	1.37438	178
.687	.0245538	2117	.194951	1056	.212290	1228	.921608	2003	1.05773	292	1.37616	180
.688	.0243421	2104	.193895	1054	.211062	1224	.919605	2002	1.05481	291	1.37796	180
.689	.0241317	2093	.192841	1050	.209838	1221	.917603	2003	1.05190	290	1.37976	182
.690	.0239224	2080	.191791	1048	.208617	1215	.915600	2002	1.04900	290	1.38158	182
.691	.0237144	2068	.190743	1044	.207402	1212	.913598	2002	1.04610	290	1.38340	184
.692	.0235076	2055	.189699	1042	.206190	1208	.911596	2001	1.04320	289	1.38524	184
.693	.0233021	2044	.188657	1039	.204982	1203	.909595	2002	1.04031	288	1.38708	186
.694	.0230977	2032	.187618	1036	.203779	1199	.907593	2001	1.03743	288	1.38894	186
.695	.0228945	2020	.186582	1033	.202580	1195	.905592	2001	1.03455	288	1.39080	188
.696	.0226925	2008	.185549	1030	.201385	1191	.903591	2001	1.03167	287	1.39268	188
.697	.0224917	1996	.184519	1028	.200194	1187	.901590	2001	1.02880	287	1.39456	190
.698	.0222921	1984	.183491	1024	.199007	1182	.899589	2000	1.02593	287	1.39646	190
.699	.0220937	1972	.182467	1022	.197825	1179	.897589	2001	1.02306	286	1.39836	192
.700	.0218965		.181445		.196646		.895588		1.02020		1.40028	

NACA

TABLE I.– CONTINUED

t	a(t)		b(t)		c(t)		d(t)		e(t)		f(t)	
.700	.0218965	1961	.181445	1019	.196646	1174	.895588	2000	1.02020	285	1.40028	193
.701	.0217004	1948	.180426	1015	.195472	1171	.893588	2000	1.01735	285	1.40221	194
.702	.0215055	1937	.179411	1014	.194301	1166	.891588	2001	1.01450	285	1.40415	194
.703	.0213118	1925	.178397	1010	.193135	1162	.889587	2000	1.01165	284	1.40609	196
.704	.0211193	1914	.177387	1007	.191973	1159	.887587	2000	1.00881	284	1.40805	197
.705	.0209279	1903	.176380	1005	.190814	1154	.885587	2000	1.00597	284	1.41002	199
.706	.0207376	1891	.175375	1001	.189660	1150	.883587	2000	1.00313	283	1.41201	199
.707	.0205485	1878	.174374	999	.188510	1146	.881587	2000	1.00030	283	1.41400	200
.708	.0203606	1868	.173375	996	.187364	1143	.879587	2000	.997475	2823	1.41600	202
.709	.0201738	1857	.172379	994	.186221	1138	.877587	2000	.994652	2819	1.41802	203
.710	.0199881	1845	.171385	990	.185083	1134	.875587	2000	.991833	2815	1.42005	204
.711	.0198036	1834	.170395	988	.183949	1130	.873587	2000	.989018	2811	1.42209	205
.712	.0196202	1822	.169407	985	.182819	1127	.871587	2000	.986207	2807	1.42414	206
.713	.0194380	1811	.168422	981	.181692	1122	.869587	2001	.983400	2804	1.42620	207
.714	.0192569	1801	.167441	980	.180570	1119	.867586	2000	.980596	2800	1.42827	209
.715	.0190768	1788	.166461	978	.179451	1114	.865586	2001	.977796	2796	1.43036	210
.716	.0188979	1777	.165485	974	.178337	1111	.863585	2001	.975000	2792	1.43246	211
.717	.0187202	1767	.164511	970	.177226	1107	.861584	2000	.972208	2789	1.43457	212
.718	.0185435	1756	.163541	969	.176119	1106	.859584	2001	.969419	2785	1.43669	214
.719	.0183679	1744	.162572	965	.175016	1099	.857583	2002	.966634	2781	1.43883	215
.720	.0181935	1734	.161607	962	.173917	1095	.855581	2001	.963853	2778	1.44098	216
.721	.0180201	1723	.160645	960	.172822	1091	.853580	2002	.961075	2774	1.44314	217
.722	.0178478	1712	.159685	957	.171731	1088	.851578	2002	.958301	2771	1.44531	219
.723	.0176766	1701	.158728	954	.170643	1084	.849576	2002	.955530	2768	1.44750	220
.724	.0175065	1690	.157774	951	.169559	1079	.847574	2002	.952762	2764	1.44970	221
.725	.0173375	1678	.156823	949	.168480	1076	.845572	2003	.949998	2760	1.45191	222
.726	.0171696	1669	.155874	946	.167404	1073	.843569	2003	.947238	2757	1.45413	224
.727	.0170027	1658	.154928	943	.166331	1068	.841566	2004	.944481	2754	1.45637	226
.728	.0168369	1648	.153985	940	.165263	1065	.839562	2004	.941727	2751	1.45863	226
.729	.0166721	1636	.153045	938	.164198	1061	.837558	2004	.938976	2747	1.46089	228
.730	.0165085	1626	.152107	935	.163137	1057	.835554	2004	.936229	2744	1.46317	229
.731	.0163459	1616	.151172	932	.162080	1053	.833550	2005	.933485	2741	1.46546	231
.732	.0161843	1605	.150240	929	.161027	1050	.831545	2006	.930744	2738	1.46777	232
.733	.0160238	1594	.149311	927	.159977	1046	.829539	2005	.928006	2734	1.47009	234
.734	.0158644	1584	.148384	924	.158931	1042	.827534	2007	.925272	2732	1.47243	235
.735	.0157060	1574	.147460	921	.157889	1039	.825527	2006	.922540	2728	1.47478	237
.736	.0155486	1563	.146539	918	.156850	1034	.823521	2008	.919812	2726	1.47715	237
.737	.0153923	1553	.145621	916	.155816	1032	.821513	2007	.917086	2722	1.47952	240
.738	.0152370	1543	.144705	913	.154784	1027	.819506	2009	.914364	2719	1.48192	241
.739	.0150827	1533	.143792	910	.153757	1024	.817497	2008	.911645	2717	1.48433	242
.740	.0149294	1522	.142882	908	.152733	1020	.815488	2009	.908928	2713	1.48675	244
.741	.0147772	1512	.141974	905	.151713	1016	.813479	2010	.906215	2711	1.48919	246
.742	.0146260	1502	.141069	902	.150697	1013	.811469	2011	.903504	2708	1.49165	247
.743	.0144758	1492	.140167	899	.149684	1009	.809458	2011	.900796	2705	1.49412	248
.744	.0143266	1481	.139268	897	.148675	1005	.807447	2012	.898091	2702	1.49660	251
.745	.0141785	1472	.138371	894	.147670	1002	.805435	2012	.895389	2700	1.49911	251
.746	.0140313	1462	.137477	892	.146668	998	.803423	2014	.892689	2697	1.50162	254
.747	.0138851	1451	.136585	888	.145670	995	.801409	2013	.889992	2694	1.50416	255
.748	.0137400	1442	.135697	886	.144675	991	.799396	2015	.887298	2692	1.50671	256
.749	.0135958	1432	.134811	883	.143684	987	.797381	2016	.884606	2689	1.50927	259
.750	.0134526	1422	.133928	881	.142697	984	.795365	2016	.881917	2686	1.51186	260
.751	.0133104	1412	.133047	878	.141713	981	.793349	2017	.879231	2684	1.51446	262
.752	.0131692	1402	.132169	875	.140732	976	.791332	2018	.876547	2682	1.51708	263
.753	.0130290	1393	.131294	873	.139756	973	.789314	2018	.873865	2678	1.51971	265
.754	.0128897	1383	.130421	869	.138783	970	.787296	2020	.871186	2676	1.52236	267
.755	.0127514	1373	.129552	868	.137813	966	.785276	2020	.868510	2674	1.52503	269
.756	.0126141	1364	.128684	864	.136847	963	.783256	2021	.865836	2672	1.52772	270
.757	.0124777	1354	.127820	862	.135884	959	.781235	2022	.863164	2670	1.53042	272
.758	.0123423	1345	.126958	859	.134925	955	.779213	2023	.860494	2667	1.53314	274
.759	.0122078	1334	.126099	857	.133970	952	.777190	2024	.857827	2665	1.53588	276
.760	.0120744		.125242		.133018		.775166		.855162		1.53864	

NACA

TABLE I.– CONTINUED

t	a(t)		b(t)		c(t)		d(t)		e(t)		f(t)	
.760	.0120744	1326	.125242	858	.133018	848	.775166	2028	.855162	2663	1.53864	278
.761	.0119418	1316	.124389	852	.132070	845	.773140	2028	.852499	2660	1.54142	280
.762	.0118102	1306	.123537	848	.131125	842	.771114	2027	.849839	2659	1.54422	281
.763	.0116796	1298	.122689	846	.130183	838	.769087	2028	.847180	2656	1.54703	284
.764	.0115498	1287	.121843	843	.129245	834	.767059	2029	.844524	2654	1.54987	285
.765	.0114211	1279	.121000	841	.128311	831	.765030	2030	.841870	2653	1.55272	288
.766	.0112932	1268	.120159	838	.127380	828	.763000	2031	.839217	2650	1.55560	289
.767	.0111663	1260	.119321	835	.126452	824	.760969	2033	.836567	2648	1.55849	291
.768	.0110403	1251	.118486	832	.125528	821	.758936	2034	.833919	2646	1.56140	294
.769	.0109152	1241	.117654	830	.124607	817	.756902	2034	.831273	2645	1.56434	295
.770	.0107911	1232	.116824	828	.123690	814	.754868	2037	.828628	2642	1.56729	298
.771	.0106679	1224	.115996	824	.122776	810	.752831	2037	.825986	2641	1.57027	299
.772	.0105455	1214	.115172	822	.121866	807	.750794	2038	.823345	2639	1.57326	302
.773	.0104241	1205	.114350	820	.120959	803	.748756	2040	.820706	2637	1.57628	304
.774	.0103036	1196	.113530	816	.120056	801	.746716	2041	.818069	2635	1.57932	306
.775	.0101840	1187	.112714	815	.119155	796	.744675	2043	.815434	2634	1.58238	308
.776	.0100653	1178	.111899	811	.118259	794	.742632	2043	.812800	2632	1.58546	310
.777	.0099475	1169	.111088	809	.117365	790	.740589	2046	.810168	2630	1.58856	313
.778	.0098306	1161	.110279	806	.116475	788	.738543	2046	.807538	2629	1.59169	315
.779	.0097145	1151	.109473	804	.115589	788	.736497	2048	.804909	2628	1.59484	317
.780	.0095994	1145	.108669	801	.114706	780	.734449	2050	.802281	2625	1.59801	319
.781	.0094851	1133	.107868	798	.113826	777	.732399	2051	.799656	2625	1.60120	322
.782	.0093718	1126	.107070	796	.112949	773	.730348	2052	.797031	2623	1.60442	324
.783	.0092592	1116	.106274	793	.112076	769	.728296	2054	.794408	2621	1.60766	327
.784	.0091476	1108	.105481	790	.111207	767	.726242	2056	.791787	2620	1.61093	329
.785	.0090368	1099	.104691	788	.110340	763	.724186	2057	.789167	2618	1.61422	331
.786	.0089269	1090	.103903	785	.109477	760	.722129	2058	.786548	2616	1.61753	334
.787	.0088179	1082	.103118	783	.108617	756	.720071	2061	.783930	2616	1.62087	336
.788	.0087097	1074	.102335	780	.107761	753	.718010	2062	.781314	2615	1.62423	339
.789	.0086023	1064	.101555	777	.106908	750	.715948	2064	.778699	2614	1.62762	342
.790	.0084959	1057	.100778	775	.106058	747	.713884	2066	.776085	2613	1.63104	344
.791	.0083902	1048	.100003	772	.105211	743	.711819	2067	.773472	2612	1.63448	347
.792	.0082854	1039	.0992306	7686	.104368	740	.709752	2069	.770860	2611	1.63795	349
.793	.0081815	1031	.0984610	7663	.103528	736	.707683	2071	.768249	2609	1.64144	352
.794	.0080784	1023	.0976941	7644	.102692	733	.705612	2073	.765640	2609	1.64496	355
.795	.0079761	1014	.0969297	7617	.101859	730	.703539	2074	.763031	2608	1.64851	357
.796	.0078747	1007	.0961680	7591	.101029	727	.701465	2077	.760423	2607	1.65208	361
.797	.0077740	997	.0954089	7565	.100202	724	.699388	2078	.757816	2606	1.65569	363
.798	.0076743	990	.0946524	7539	.0993783	8202	.697310	2080	.755210	2605	1.65932	366
.799	.0075753	982	.0938985	7513	.0985581	8170	.695230	2083	.752605	2605	1.66298	369
.800	.0074771	973	.0931472	7487	.0977411	8137	.693147	2084	.750000	2604	1.66667	372
.801	.0073798	965	.0923985	7461	.0969274	8104	.691063	2087	.747396	2603	1.67039	374
.802	.0072833	957	.0916524	7435	.0961170	8072	.688976	2088	.744793	2602	1.67413	378
.803	.0071876	949	.0909089	7408	.0953098	8040	.686888	2091	.742191	2602	1.67791	381
.804	.0070927	941	.0901680	7383	.0945058	8007	.684797	2092	.739589	2602	1.68172	384
.805	.0069986	934	.0894297	7357	.0937051	7975	.682705	2095	.736987	2601	1.68556	387
.806	.0069052	925	.0886940	7331	.0929076	7943	.680610	2098	.734386	2600	1.68943	390
.807	.0068127	917	.0879609	7304	.0921133	7910	.678512	2099	.731786	2600	1.69333	394
.808	.0067210	909	.0872305	7278	.0913223	7878	.676413	2102	.729186	2599	1.69727	396
.809	.0066301	901	.0865026	7253	.0905345	7846	.674311	2104	.726587	2599	1.70123	400
.810	.0065400	894	.0857773	7227	.0897499	7815	.672207	2106	.723988	2599	1.70523	404
.811	.0064506	888	.0850546	7201	.0889684	7782	.670101	2108	.721389	2599	1.70927	406
.812	.0063620	878	.0843345	7175	.0881902	7750	.667992	2111	.718790	2598	1.71333	410
.813	.0062742	870	.0836170	7148	.0874152	7718	.665881	2114	.716192	2598	1.71743	414
.814	.0061872	863	.0829021	7123	.0866434	7688	.663767	2116	.713593	2598	1.72157	417
.815	.0061009	855	.0821898	7097	.0858748	7654	.661651	2119	.710995	2598	1.72574	421
.816	.0060154	847	.0814801	7071	.0851094	7623	.659532	2121	.708397	2598	1.72995	424
.817	.0059307	840	.0807730	7045	.0843471	7590	.657411	2124	.705799	2598	1.73419	428
.818	.0058467	832	.0800685	7018	.0835881	7558	.655287	2127	.703201	2598	1.73847	432
.819	.0057635	824	.0793666	6993	.0828322	7527	.653160	2128	.700603	2598	1.74279	435
.820	.0056811		.0786673		.0820795		.651031		.698004		1.74714	

NACA

TABLE I.– CONTINUED

t	a(t)		b(t)		c(t)		d(t)		e(t)		f(t)	
.820	.0056811	817	.0786673	6867	.0820795	7495	.651031	2132	.698004	2588	1.74714	439
.821	.0055994	810	.0779706	6841	.0813300	7464	.648899	2135	.695406	2578	1.75153	443
.822	.0055184	802	.0772765	6815	.0805836	7432	.646764	2138	.692807	2598	1.75596	448
.823	.0054382	795	.0765850	6889	.0798404	7401	.644626	2140	.690208	2599	1.76044	451
.824	.0053587	787	.0758961	6863	.0791003	7369	.642486	2143	.687609	2600	1.76495	455
.825	.0052800	780	.0752098	6837	.0783634	7338	.640343	2147	.685009	2600	1.76950	459
.826	.0052020	773	.0745261	6811	.0776296	7306	.638196	2149	.682409	2600	1.77409	463
.827	.0051247	765	.0738450	6785	.0768990	7274	.636047	2152	.679809	2601	1.77872	468
.828	.0050482	758	.0731665	6759	.0761716	7243	.633895	2156	.677208	2602	1.78340	471
.829	.0049724	751	.0724906	6733	.0754473	7212	.631739	2158	.674606	2602	1.78811	476
.830	.0048973	744	.0718173	6707	.0747261	7181	.629581	2162	.672004	2603	1.79287	481
.831	.0048229	736	.0711466	6681	.0740080	7149	.627419	2163	.669401	2603	1.79768	485
.832	.0047493	729	.0704785	6655	.0732931	7118	.625254	2168	.666798	2605	1.80253	490
.833	.0046764	723	.0698130	6629	.0725813	7088	.623086	2171	.664193	2605	1.80743	494
.834	.0046041	715	.0691501	6603	.0718727	7055	.620915	2175	.661588	2608	1.81237	498
.835	.0045326	708	.0684898	6577	.0711672	7023	.618740	2178	.658982	2607	1.81736	503
.836	.0044618	701	.0678321	6551	.0704647	6993	.616562	2182	.656375	2608	1.82239	509
.837	.0043917	694	.0671770	6524	.0697654	6961	.614380	2185	.653767	2608	1.82748	513
.838	.0043223	688	.0665246	6498	.0690693	6931	.612195	2188	.651158	2610	1.83261	518
.839	.0042535	680	.0658747	6472	.0683762	6899	.610006	2192	.648548	2612	1.83779	523
.840	.0041855	673	.0652275	6447	.0676863	6869	.607814	2196	.645936	2612	1.84302	529
.841	.0041182	667	.0645828	6420	.0669994	6837	.605618	2200	.643324	2614	1.84831	534
.842	.0040515	660	.0639408	6394	.0663157	6806	.603418	2203	.640710	2616	1.85365	538
.843	.0039855	653	.0633014	6368	.0656351	6776	.601215	2207	.638094	2616	1.85903	545
.844	.0039202	646	.0626646	6341	.0649575	6744	.599008	2211	.635478	2618	1.86448	550
.845	.0038556	638	.0620305	6316	.0642831	6713	.596797	2215	.632860	2620	1.86998	555
.846	.0037917	633	.0613989	6289	.0636118	6682	.594582	2219	.630240	2621	1.87553	561
.847	.0037284	626	.0607700	6263	.0629436	6652	.592363	2223	.627619	2623	1.88114	567
.848	.0036658	620	.0601437	6237	.0622784	6620	.590140	2227	.624996	2625	1.88681	572
.849	.0036038	613	.0595200	6211	.0616164	6589	.587913	2231	.622371	2627	1.89253	579
.850	.0035425	606	.0588989	6184	.0609575	6559	.585682	2236	.619744	2628	1.89832	584
.851	.0034819	600	.0582805	6158	.0603016	6528	.583446	2239	.617116	2630	1.90416	591
.852	.0034219	593	.0576647	6132	.0596488	6496	.581207	2245	.614486	2633	1.91007	597
.853	.0033626	587	.0570515	6105	.0589992	6466	.578962	2248	.611853	2634	1.91604	603
.854	.0033039	580	.0564410	6078	.0583526	6435	.576714	2253	.609219	2637	1.92207	609
.855	.0032459	574	.0558331	6053	.0577091	6404	.574461	2257	.606582	2638	1.92816	617
.856	.0031885	567	.0552278	6026	.0570687	6373	.572204	2262	.603944	2641	1.93433	623
.857	.0031318	561	.0546252	6000	.0564314	6343	.569942	2267	.601303	2644	1.94056	629
.858	.0030757	555	.0540252	5973	.0557971	6312	.567675	2272	.598659	2646	1.94685	637
.859	.0030202	548	.0534279	5947	.0551659	6280	.565403	2278	.596013	2648	1.95322	646
.860	.0029653	542	.0528332	5920	.0545379	6250	.563127	2281	.593365	2651	1.95965	651
.861	.0029111	536	.0522412	5894	.0539129	6220	.560846	2286	.590714	2653	1.96616	658
.862	.0028575	530	.0516518	5867	.0532909	6188	.558560	2291	.588061	2657	1.97274	666
.863	.0028045	523	.0510651	5841	.0526721	6158	.556269	2296	.585404	2659	1.97940	675
.864	.0027522	518	.0504810	5814	.0520563	6127	.553973	2302	.582745	2662	1.98613	681
.865	.0027004	511	.0498996	5788	.0514436	6098	.551671	2306	.580083	2665	1.99294	688
.866	.0026493	506	.0493208	5761	.0508340	6065	.549365	2312	.577418	2668	1.99982	697
.867	.0025987	499	.0487447	5734	.0502275	6034	.547053	2317	.574750	2671	2.00679	705
.868	.0025488	493	.0481713	5707	.0496241	6004	.544736	2323	.572079	2675	2.01384	713
.869	.0024995	487	.0476006	5681	.0490237	5973	.542413	2328	.569404	2678	2.02097	721
.870	.0024508	482	.0470325	5654	.0484264	5942	.540084	2334	.566726	2681	2.02818	731
.871	.0024026	475	.0464671	5627	.0478322	5911	.537750	2340	.564045	2685	2.03549	739
.872	.0023551	470	.0459044	5600	.0472411	5881	.535410	2345	.561360	2689	2.04288	748
.873	.0023081	463	.0453444	5573	.0466530	5849	.533065	2352	.558671	2692	2.05036	757
.874	.0022618	458	.0447871	5547	.0460681	5819	.530713	2358	.555979	2696	2.05793	766
.875	.0022160	452	.0442324	5519	.0454862	5788	.528355	2363	.553283	2700	2.06559	776
.876	.0021708	446	.0436805	5492	.0449074	5757	.525992	2370	.550583	2703	2.07335	786
.877	.0021262	441	.0431313	5465	.0443317	5727	.523622	2377	.547880	2708	2.08121	795
.878	.0020821	434	.0425848	5439	.0437590	5693	.521245	2382	.545172	2713	2.08916	806
.879	.0020387	429	.0420409	5411	.0431895	5664	.518863	2389	.542459	2716	2.09722	816
.880	.0019958		.0414998		.0426231		.516474		.539743		2.10538	

NACA

TABLE I.– CONCLUDED

t	a(t)		b(t)		c(t)		d(t)		e(t)		f(t)	
.880	.0019958	424	.0414998	5383	.0426231	5634	.516474	2396	.539743	2721	2.10538	827
.881	.0019534	417	.0409615	5357	.0420597	5608	.514078	2408	.537022	2726	2.11365	837
.882	.0019117	413	.0404258	5329	.0414994	5572	.511675	2408	.534296	2730	2.12202	848
.883	.0018704	406	.0398929	5302	.0409422	5540	.509266	2416	.531566	2735	2.13050	860
.884	.0018298	401	.0393627	5275	.0403882	5510	.506850	2424	.528831	2738	2.13910	871
.885	.0017897	396	.0388352	5247	.0398372	5478	.504426	2430	.526092	2745	2.14781	883
.886	.0017501	390	.0383105	5220	.0392893	5445	.501996	2438	.523347	2750	2.15664	894
.887	.0017111	385	.0377885	5192	.0387445	5417	.499558	2445	.520597	2755	2.16558	907
.888	.0016726	379	.0372693	5165	.0382028	5386	.497113	2453	.517842	2761	2.17465	918
.889	.0016347	374	.0367528	5137	.0376642	5354	.494660	2460	.515081	2766	2.18384	933
.890	.0015973	368	.0362391	5109	.0371288	5324	.492200	2468	.512315	2771	2.19317	946
.891	.0015604	363	.0357282	5082	.0365964	5293	.489732	2477	.509544	2778	2.20263	958
.892	.0015241	358	.0352200	5053	.0360671	5261	.487255	2484	.506766	2788	2.21221	973
.893	.0014883	353	.0347147	5026	.0355410	5230	.484771	2492	.503983	2790	2.22194	987
.894	.0014530	348	.0342121	4998	.0350180	5198	.482279	2501	.501193	2795	2.23181	1001
.895	.0014182	342	.0337123	4970	.0344981	5167	.479778	2509	.498398	2802	2.24182	1016
.896	.0013840	337	.0332153	4942	.0339814	5137	.477269	2517	.495596	2808	2.25198	1031
.897	.0013503	332	.0327211	4914	.0334677	5105	.474752	2527	.492788	2815	2.26229	1046
.898	.0013171	327	.0322297	4885	.0329572	5073	.472225	2535	.489973	2822	2.27275	1062
.899	.0012844	322	.0317412	4858	.0324499	5042	.469690	2545	.487151	2829	2.28337	1078
.900	.0012522	317	.0312554	4829	.0319457	5011	.467145	2553	.484322	2836	2.29416	1095
.901	.0012205	312	.0307725	4801	.0314446	4978	.464592	2564	.481486	2843	2.30511	1112
.902	.0011893	307	.0302924	4772	.0309467	4948	.462028	2572	.478643	2851	2.31623	1130
.903	.0011586	302	.0298152	4743	.0304519	4918	.459456	2583	.475792	2858	2.32753	1147
.904	.0011284	298	.0293409	4715	.0299603	4884	.456873	2592	.472934	2866	2.33900	1166
.905	.0010986	292	.0288694	4687	.0294719	4853	.454281	2603	.470068	2874	2.35066	1185
.906	.0010694	287	.0284007	4657	.0289866	4820	.451678	2612	.467194	2882	2.36251	1205
.907	.0010407	283	.0279350	4628	.0285046	4790	.449066	2624	.464312	2891	2.37456	1224
.908	.0010124	278	.0274721	4600	.0280256	4757	.446442	2634	.461421	2899	2.38680	1245
.909	.0009846	273	.0270121	4570	.0275499	4725	.443808	2645	.458522	2909	2.39925	1266
.910	.0009573	268	.0265551	4542	.0270774	4693	.441163	2656	.455613	2917	2.41191	1288
.911	.0009305	264	.0261009	4512	.0266081	4661	.438507	2667	.452696	2926	2.42479	1310
.912	.0009041	259	.0256497	4483	.0261420	4629	.435840	2678	.449770	2936	2.43789	1333
.913	.0008782	255	.0252014	4454	.0256791	4597	.433161	2691	.446834	2945	2.45122	1357
.914	.0008527	250	.0247560	4424	.0252194	4564	.430470	2703	.443889	2956	2.46479	1381
.915	.0008277	245	.0243136	4395	.0247630	4532	.427767	2715	.440933	2965	2.47860	1406
.916	.0008032	241	.0238741	4364	.0243098	4500	.425052	2727	.437968	2976	2.49266	1431
.917	.0007791	236	.0234377	4335	.0238598	4467	.422325	2740	.434992	2987	2.50697	1459
.918	.0007555	232	.0230042	4305	.0234131	4435	.419585	2754	.432005	2998	2.52156	1485
.919	.0007323	228	.0225737	4275	.0229696	4402	.416831	2766	.429007	3009	2.53641	1514
.920	.0007095	223	.0221462	4245	.0225294	4369	.414065	2781	.425998	3020	2.55155	1543
.921	.0006872	218	.0217217	4215	.0220925	4336	.411284	2794	.422978	3032	2.56698	1573
.922	.0006654	215	.0213002	4184	.0216589	4303	.408490	2808	.419946	3045	2.58271	1604
.923	.0006439	210	.0208818	4154	.0212286	4271	.405682	2823	.416901	3056	2.59875	1636
.924	.0006229	206	.0204664	4123	.0208015	4237	.402859	2835	.413845	3070	2.61511	1670
.925	.0006023	202	.0200541	4092	.0203778	4204	.400021	2853	.410775	3082	2.63181	1703
.926	.0005821	197	.0196449	4062	.0199574	4170	.397168	2868	.407693	3096	2.64884	1739
.927	.0005624	193	.0192387	4030	.0195404	4137	.394300	2884	.404597	3110	2.66623	1776
.928	.0005431	190	.0188357	4000	.0191267	4104	.391416	2901	.401487	3126	2.68399	1813
.929	.0005241	185	.0184357	3968	.0187163	4069	.388515	2917	.398364	3138	2.70212	1853
.930	.0005056	181	.0180389	3936	.0183094	4036	.385598	2934	.395225	3153	2.72065	1893
.931	.0004875	177	.0176453	3905	.0179058	4002	.382664	2951	.392072	3168	2.73958	1936
.932	.0004698	173	.0172548	3873	.0175056	3968	.379713	2969	.388904	3184	2.75894	1979
.933	.0004525	169	.0168675	3841	.0171088	3934	.376744	2988	.385720	3201	2.77873	2025
.934	.0004356	165	.0164834	3808	.0167154	3899	.373756	3006	.382519	3217	2.79898	2072
.935	.0004191	162	.0161025	3777	.0163255	3865	.370750	3025	.379302	3234	2.81970	2121
.936	.0004029	157	.0157248	3745	.0159390	3830	.367725	3045	.376068	3251	2.84091	2172
.937	.0003872	154	.0153503	3711	.0155560	3796	.364680	3066	.372817	3270	2.86263	2225
.938	.0003718	150	.0149792	3680	.0151764	3760	.361614	3086	.369547	3288	2.88488	2280
.939	.0003568	146	.0146112	3646	.0148004	3725	.358528	3107	.366259	3307	2.90768	2337
.940	.0003422		.0142466		.0144279		.355421		.362952		2.93105	

NACA

TABLE II.– STEP, CORNER, AND CURVATURE SOLUTIONS

t	g(t)		h(t)		i(t)		j(t)		k(t)		l(t)		m(t)	
.100	1.03564	586	2.14267	889	5.89216	6030	1.97491	444	9.03573	8892	.541079	2161	4.46376	4478
.101	1.02978	581	2.13368	880	5.83186	5913	1.97047	440	8.94681	8716	.538918	2139	4.41897	4391
.102	1.02397	574	2.12478	882	5.77273	5800	1.96607	435	8.85963	8548	.536779	2116	4.37506	4306
.103	1.01823	568	2.11596	873	5.71473	5690	1.96172	431	8.77415	8384	.534663	2085	4.33200	4223
.104	1.01254	563	2.10723	865	5.65783	5583	1.95741	427	8.69031	8223	.532568	2075	4.28977	4143
.105	1.00691	557	2.09858	857	5.60200	5478	1.95314	423	8.60808	8063	.530493	2052	4.24834	4066
.106	1.00134	552	2.09001	848	5.54721	5378	1.94891	419	8.52739	7917	.528441	2033	4.20768	3989
.107	.995819	5467	2.08152	840	5.49343	5280	1.94472	415	8.44822	7770	.526408	2012	4.16779	3916
.108	.990352	5414	2.07312	834	5.44063	5185	1.94057	411	8.37052	7627	.524396	1993	4.12863	3845
.109	.984938	5364	2.06478	825	5.38878	5091	1.93646	407	8.29425	7488	.522403	1974	4.09018	3774
.110	.979574	5314	2.05653	818	5.33787	5001	1.93239	403	8.21937	7353	.520429	1955	4.05244	3707
.111	.974260	5263	2.04834	811	5.28786	4913	1.92836	400	8.14584	7222	.518474	1936	4.01537	3641
.112	.968997	5214	2.04023	803	5.23873	4828	1.92436	396	8.07362	7094	.516538	1918	3.97896	3577
.113	.963783	5166	2.03220	797	5.19045	4744	1.92040	392	8.00268	6968	.514620	1900	3.94319	3514
.114	.958617	5120	2.02423	790	5.14301	4663	1.91648	389	7.93300	6846	.512720	1882	3.90805	3453
.115	.953497	5073	2.01633	783	5.09638	4583	1.91259	386	7.86452	6726	.510838	1865	3.87352	3394
.116	.948424	5028	2.00850	777	5.05055	4507	1.90873	382	7.79723	6610	.508973	1847	3.83958	3337
.117	.943395	4983	2.00073	769	5.00548	4431	1.90491	379	7.73110	6502	.507126	1831	3.80621	3279
.118	.938412	4939	1.99304	764	4.96117	4358	1.90112	376	7.66608	6392	.505295	1815	3.77342	3225
.119	.933473	4896	1.98540	757	4.91759	4287	1.89736	373	7.60216	6285	.503480	1798	3.74117	3171
.120	.928577	4854	1.97783	751	4.87472	4217	1.89363	369	7.53931	6181	.501682	1782	3.70946	3120
.121	.923723	4811	1.97032	744	4.83255	4149	1.88994	366	7.47750	6079	.499900	1767	3.67826	3068
.122	.918912	4772	1.96288	739	4.79106	4083	1.88628	364	7.41671	5980	.498133	1751	3.64758	3018
.123	.914140	4730	1.95549	733	4.75023	4018	1.88264	360	7.35691	5884	.496382	1736	3.61740	2970
.124	.909410	4690	1.94816	727	4.71005	3955	1.87904	357	7.29807	5789	.494646	1721	3.58770	2923
.125	.904720	4650	1.94089	721	4.67050	3894	1.87547	355	7.24018	5697	.492925	1706	3.55847	2876
.126	.900070	4613	1.93368	715	4.63156	3833	1.87192	351	7.18321	5608	.491219	1692	3.52971	2831
.127	.895457	4574	1.92653	710	4.59323	3774	1.86841	348	7.12713	5519	.489527	1677	3.50140	2788
.128	.890883	4537	1.91943	705	4.55549	3717	1.86492	346	7.07194	5434	.487850	1664	3.47352	2744
.129	.886346	4500	1.91238	699	4.51832	3661	1.86146	343	7.01760	5349	.486186	1650	3.44608	2702
.130	.881846	4464	1.90539	694	4.48171	3608	1.85803	341	6.96411	5268	.484536	1636	3.41906	2661
.131	.877382	4428	1.89845	688	4.44565	3555	1.85462	338	6.91143	5188	.482900	1622	3.39245	2620
.132	.872954	4392	1.89157	684	4.41012	3500	1.85124	335	6.85955	5110	.481278	1610	3.36625	2582
.133	.868562	4358	1.88473	678	4.37512	3449	1.84789	333	6.80845	5033	.479668	1596	3.34043	2543
.134	.864204	4324	1.87795	673	4.34063	3399	1.84456	330	6.75812	4959	.478072	1584	3.31500	2506
.135	.859880	4290	1.87122	669	4.30664	3350	1.84126	328	6.70853	4885	.476488	1571	3.28994	2469
.136	.855590	4258	1.86453	663	4.27314	3302	1.83798	325	6.65968	4814	.474917	1558	3.26525	2433
.137	.851334	4224	1.85790	659	4.24012	3255	1.83473	323	6.61154	4744	.473359	1546	3.24092	2398
.138	.847110	4191	1.85131	654	4.20757	3209	1.83150	320	6.56410	4675	.471813	1534	3.21694	2363
.139	.842919	4160	1.84477	648	4.17548	3165	1.82830	319	6.51735	4609	.470279	1523	3.19331	2330
.140	.838759	4128	1.83828	645	4.14383	3120	1.82511	315	6.47126	4543	.468756	1510	3.17001	2297
.141	.834631	4097	1.83183	641	4.11263	3078	1.82196	314	6.42583	4478	.467246	1499	3.14704	2265
.142	.830534	4067	1.82542	636	4.08185	3036	1.81882	311	6.38105	4416	.465747	1487	3.12439	2234
.143	.826467	4037	1.81906	631	4.05149	2994	1.81571	309	6.33689	4355	.464260	1476	3.10205	2202
.144	.822430	4008	1.81275	627	4.02155	2954	1.81262	307	6.29334	4294	.462784	1465	3.08003	2172
.145	.818424	3978	1.80648	623	3.99201	2914	1.80955	305	6.25040	4235	.461319	1453	3.05831	2143
.146	.814446	3948	1.80025	619	3.96287	2876	1.80650	303	6.20805	4177	.459864	1443	3.03688	2113
.147	.810498	3920	1.79406	615	3.93411	2838	1.80347	300	6.16628	4121	.458421	1433	3.01575	2085
.148	.806578	3892	1.78791	610	3.90573	2800	1.80047	299	6.12507	4066	.456988	1421	2.99490	2057
.149	.802686	3864	1.78181	606	3.87773	2765	1.79748	296	6.08441	4010	.455567	1412	2.97433	2030
.150	.798822	3836	1.77575	603	3.85008	2728	1.79452	295	6.04431	3958	.454155	1401	2.95403	2003
.151	.794986	3809	1.76972	598	3.82280	2693	1.79157	292	6.00473	3906	.452754	1392	2.93400	1977
.152	.791177	3783	1.76374	595	3.79587	2659	1.78865	290	5.96567	3854	.451362	1381	2.91423	1951
.153	.787394	3756	1.75779	591	3.76928	2626	1.78575	289	5.92713	3804	.449981	1371	2.89472	1926
.154	.783638	3730	1.75188	587	3.74302	2592	1.78286	286	5.88909	3755	.448610	1362	2.87546	1901
.155	.779908	3705	1.74601	583	3.71710	2560	1.78000	285	5.85154	3706	.447248	1352	2.85645	1877
.156	.776203	3678	1.74018	580	3.69150	2528	1.77715	283	5.81448	3659	.445896	1343	2.83768	1853
.157	.772525	3654	1.73438	576	3.66621	2497	1.77432	281	5.77789	3613	.444553	1333	2.81915	1830
.158	.768871	3629	1.72862	572	3.64124	2466	1.77151	279	5.74176	3567	.443220	1324	2.80085	1807
.159	.765242	3604	1.72290	569	3.61658	2437	1.76872	278	5.70609	3522	.441896	1314	2.78278	1784
.160	.761638		1.71721		3.59221		1.76594		5.67087		.440582		2.76494	

NACA

TABLE II.– CONTINUED

t	g(t)		h(t)		i(t)		j(t)		k(t)		l(t)		m(t)	
.160	.761638	3580	1.71721	565	3.59221	2407	1.76594	275	5.67087	3479	.440582	1306	2.76494	1782
.161	.758058	3557	1.71156	562	3.56814	2378	1.76319	274	5.63608	3435	.439276	1297	2.74732	1741
.162	.754501	3532	1.70594	559	3.54436	2350	1.76045	272	5.60173	3393	.437979	1288	2.72991	1719
.163	.750969	3510	1.70035	555	3.52086	2322	1.75773	271	5.56780	3351	.436691	1280	2.71272	1688
.164	.747459	3486	1.69480	552	3.49764	2295	1.75502	268	5.53429	3311	.435411	1270	2.69574	1678
.165	.743973	3463	1.68928	548	3.47469	2267	1.75234	267	5.50118	3271	.434141	1263	2.67896	1658
.166	.740510	3441	1.68380	545	3.45202	2242	1.74967	266	5.46847	3231	.432878	1253	2.66238	1638
.167	.737069	3418	1.67835	542	3.42960	2215	1.74701	264	5.43616	3193	.431625	1246	2.64600	1618
.168	.733651	3397	1.67293	539	3.40745	2190	1.74437	262	5.40423	3155	.430379	1238	2.62981	1600
.169	.730254	3375	1.66754	536	3.38555	2165	1.74175	260	5.37268	3118	.429141	1229	2.61381	1580
.170	.726879	3353	1.66218	532	3.36390	2141	1.73915	259	5.34150	3081	.427912	1221	2.59801	1563
.171	.723526	3331	1.65686	530	3.34249	2116	1.73656	258	5.31069	3045	.426691	1214	2.58238	1544
.172	.720195	3311	1.65156	526	3.32133	2093	1.73398	256	5.28024	3010	.425477	1205	2.56694	1527
.173	.716884	3290	1.64630	524	3.30040	2069	1.73142	254	5.25014	2975	.424272	1198	2.55167	1509
.174	.713594	3270	1.64106	521	3.27971	2046	1.72888	253	5.22039	2941	.423074	1190	2.53658	1492
.175	.710324	3249	1.63585	517	3.25925	2024	1.72635	252	5.19098	2907	.421884	1183	2.52166	1475
.176	.707075	3229	1.63068	515	3.23901	2002	1.72383	249	5.16191	2875	.420701	1175	2.50691	1458
.177	.703846	3209	1.62553	512	3.21899	1980	1.72134	249	5.13316	2842	.419526	1168	2.49233	1443
.178	.700637	3189	1.62041	509	3.19919	1958	1.71885	247	5.10474	2810	.418358	1160	2.47790	1426
.179	.697448	3170	1.61532	506	3.17961	1938	1.71638	246	5.07664	2779	.417198	1154	2.46364	1410
.180	.694278	3151	1.61026	504	3.16023	1917	1.71392	244	5.04885	2748	.416044	1146	2.44954	1395
.181	.691127	3132	1.60522	500	3.14106	1896	1.71148	243	5.02137	2717	.414898	1139	2.43559	1380
.182	.687995	3112	1.60022	499	3.12210	1876	1.70905	241	4.99420	2688	.413759	1132	2.42179	1364
.183	.684883	3094	1.59523	495	3.10334	1857	1.70664	240	4.96732	2659	.412627	1126	2.40815	1350
.184	.681789	3076	1.59028	493	3.08477	1837	1.70424	238	4.94073	2629	.411502	1118	2.39465	1335
.185	.678713	3057	1.58535	490	3.06640	1818	1.70185	238	4.91444	2602	.410384	1112	2.38130	1321
.186	.675656	3039	1.58045	487	3.04821	1799	1.69947	236	4.88842	2573	.409272	1105	2.36809	1307
.187	.672617	3022	1.57558	485	3.03022	1781	1.69711	235	4.86269	2546	.408167	1098	2.35502	1293
.188	.669595	3003	1.57073	483	3.01241	1763	1.69476	233	4.83723	2519	.407069	1092	2.34209	1280
.189	.666592	2986	1.56590	480	2.99478	1745	1.69243	233	4.81204	2492	.405977	1085	2.32929	1266
.190	.663606	2969	1.56110	477	2.97733	1727	1.69010	231	4.78712	2466	.404892	1079	2.31663	1253
.191	.660637	2951	1.55633	475	2.96006	1710	1.68779	229	4.76246	2440	.403813	1072	2.30410	1240
.192	.657686	2936	1.55158	473	2.94296	1693	1.68550	229	4.73806	2415	.402741	1066	2.29170	1227
.193	.654751	2918	1.54685	470	2.92603	1676	1.68321	227	4.71391	2390	.401675	1060	2.27943	1214
.194	.651833	2900	1.54215	468	2.90927	1659	1.68094	226	4.69001	2365	.400615	1054	2.26729	1203
.195	.648933	2885	1.53747	465	2.89268	1643	1.67868	225	4.66636	2341	.399561	1048	2.25526	1189
.196	.646048	2868	1.53282	464	2.87625	1628	1.67643	224	4.64295	2317	.398513	1041	2.24337	1178
.197	.643180	2851	1.52818	460	2.85997	1611	1.67419	223	4.61978	2294	.397472	1036	2.23159	1166
.198	.640329	2837	1.52358	459	2.84386	1596	1.67196	221	4.59684	2270	.396436	1030	2.21993	1155
.199	.637492	2820	1.51899	456	2.82790	1580	1.66975	221	4.57414	2248	.395406	1024	2.20838	1143
.200	.634672	2804	1.51443	454	2.81210	1565	1.66754	219	4.55166	2225	.394382	1018	2.19695	1131
.201	.631868	2789	1.50989	452	2.79645	1551	1.66535	218	4.52941	2203	.393364	1012	2.18564	1121
.202	.629079	2773	1.50537	450	2.78094	1536	1.66317	216	4.50738	2182	.392352	1007	2.17443	1109
.203	.626306	2758	1.50087	447	2.76559	1522	1.66101	216	4.48556	2159	.391345	1001	2.16334	1098
.204	.623548	2743	1.49640	446	2.75037	1507	1.65885	215	4.46397	2139	.390344	995	2.15235	1088
.205	.620805	2728	1.49194	443	2.73530	1493	1.65670	214	4.44258	2118	.389349	990	2.14147	1077
.206	.618077	2713	1.48751	441	2.72037	1479	1.65456	212	4.42140	2097	.388359	985	2.13070	1067
.207	.615364	2698	1.48310	439	2.70558	1465	1.65244	212	4.40043	2077	.387374	979	2.12003	1057
.208	.612666	2683	1.47871	437	2.69093	1452	1.65032	210	4.37966	2057	.386395	974	2.10946	1047
.209	.609983	2670	1.47434	435	2.67641	1439	1.64822	208	4.35909	2038	.385421	968	2.09899	1037
.210	.607313	2655	1.46999	432	2.66202	1426	1.64613	209	4.33871	2018	.384453	963	2.08862	1027
.211	.604658	2640	1.46567	431	2.64776	1413	1.64404	207	4.31853	1998	.383490	958	2.07835	1017
.212	.602018	2627	1.46136	429	2.63363	1400	1.64197	206	4.29855	1980	.382532	953	2.06818	1008
.213	.599391	2612	1.45707	427	2.61963	1388	1.63991	206	4.27875	1962	.381579	948	2.05810	999
.214	.596779	2599	1.45280	425	2.60575	1375	1.63785	204	4.25913	1943	.380631	942	2.04811	988
.215	.594180	2586	1.44855	423	2.59200	1363	1.63581	204	4.23970	1925	.379689	938	2.03822	980
.216	.591594	2571	1.44432	421	2.57837	1351	1.63377	202	4.22045	1907	.378751	933	2.02842	972
.217	.589023	2558	1.44011	419	2.56486	1340	1.63175	201	4.20138	1890	.377818	927	2.01870	962
.218	.586465	2545	1.43592	418	2.55146	1327	1.62974	200	4.18248	1872	.376891	923	2.00908	954
.219	.583920	2532	1.43174	415	2.53819	1316	1.62774	200	4.16376	1855	.375968	918	1.99954	945
.220	.581388		1.42759		2.52503		1.62574		4.14521		.375050		1.99009	

NACA

TABLE II.– CONTINUED

t	g(t)		h(t)		i(t)		j(t)		k(t)		l(t)		m(t)	
.220	.581388	2318	1.42759	414	2.52503	1305	1.62574	198	4.14521	1838	.375050	914	1.99009	936
.221	.578870	2306	1.42345	411	2.51198	1293	1.62376	198	4.12683	1822	.374136	908	1.98073	928
.222	.576364	2292	1.41934	410	2.49905	1282	1.62178	197	4.10861	1805	.373228	904	1.97145	920
.223	.573872	2280	1.41524	409	2.48623	1272	1.61981	196	4.09056	1789	.372324	899	1.96225	912
.224	.571392	2268	1.41115	406	2.47351	1260	1.61785	194	4.07267	1773	.371425	894	1.95313	903
.225	.568924	2254	1.40709	405	2.46091	1250	1.61591	194	4.05494	1758	.370531	890	1.94410	896
.226	.566470	2243	1.40304	402	2.44841	1240	1.61397	193	4.03736	1741	.369641	885	1.93514	887
.227	.564027	2229	1.39902	402	2.43601	1229	1.61204	193	4.01995	1727	.368756	881	1.92627	880
.228	.561598	2218	1.39500	399	2.42372	1218	1.61011	191	4.00268	1711	.367875	877	1.91747	873
.229	.559180	2205	1.39101	398	2.41153	1209	1.60820	190	3.98557	1696	.366998	872	1.90874	864
.230	.556775	2194	1.38703	396	2.39944	1199	1.60630	190	3.96861	1682	.366126	867	1.90010	858
.231	.554381	2181	1.38307	394	2.38745	1189	1.60440	189	3.95179	1667	.365259	863	1.89152	850
.232	.552000	2170	1.37913	393	2.37556	1179	1.60251	188	3.93512	1652	.364396	859	1.88302	843
.233	.549630	2158	1.37520	391	2.36377	1170	1.60063	187	3.91860	1639	.363537	855	1.87459	835
.234	.547272	2146	1.37129	389	2.35207	1160	1.59876	186	3.90221	1624	.362682	850	1.86624	829
.235	.544926	2135	1.36740	388	2.34047	1151	1.59690	185	3.88597	1611	.361832	846	1.85795	821
.236	.542591	2123	1.36352	388	2.32896	1142	1.59505	185	3.86986	1596	.360986	842	1.84974	815
.237	.540268	2112	1.35966	383	2.31754	1133	1.59320	183	3.85390	1584	.360144	838	1.84159	807
.238	.537956	2100	1.35581	383	2.30621	1123	1.59137	183	3.83806	1570	.359306	834	1.83352	801
.239	.535656	2090	1.35198	381	2.29498	1115	1.58954	183	3.82236	1557	.358472	830	1.82551	795
.240	.533366	2078	1.34817	380	2.28383	1106	1.58771	181	3.80679	1544	.357642	826	1.81756	788
.241	.531088	2068	1.34437	379	2.27277	1098	1.58590	181	3.79135	1531	.356816	821	1.80968	781
.242	.528820	2056	1.34058	378	2.26179	1088	1.58409	179	3.77604	1518	.355995	818	1.80187	775
.243	.526564	2045	1.33682	376	2.25091	1081	1.58230	179	3.76086	1506	.355177	814	1.79412	769
.244	.524319	2035	1.33306	374	2.24010	1072	1.58051	179	3.74580	1494	.354363	810	1.78643	762
.245	.522084	2024	1.32932	372	2.22938	1063	1.57872	177	3.73086	1481	.353553	806	1.77881	756
.246	.519860	2014	1.32560	371	2.21875	1056	1.57695	177	3.71605	1468	.352747	802	1.77125	750
.247	.517646	2002	1.32189	369	2.20819	1047	1.57518	176	3.70136	1458	.351945	798	1.76375	744
.248	.515444	1993	1.31820	368	2.19772	1040	1.57342	175	3.68678	1445	.351147	795	1.75631	738
.249	.513251	1982	1.31452	367	2.18732	1032	1.57167	175	3.67233	1434	.350352	791	1.74893	733
.250	.511069	1972	1.31085	365	2.17700	1024	1.56992	173	3.65799	1423	.349561	787	1.74160	726
.251	.508897	1962	1.30720	363	2.16676	1016	1.56819	174	3.64376	1411	.348774	784	1.73434	721
.252	.506735	1951	1.30357	363	2.15660	1009	1.56645	172	3.62965	1400	.347990	778	1.72713	715
.253	.504584	1942	1.29994	360	2.14651	1001	1.56473	172	3.61565	1389	.347211	777	1.71998	709
.254	.502442	1931	1.29634	360	2.13650	993	1.56301	170	3.60176	1378	.346434	772	1.71289	704
.255	.500311	1922	1.29274	358	2.12657	987	1.56131	171	3.58798	1367	.345662	769	1.70585	699
.256	.498189	1912	1.28916	357	2.11670	979	1.55960	169	3.57431	1356	.344893	766	1.69886	693
.257	.496077	1902	1.28559	355	2.10691	972	1.55791	169	3.56075	1346	.344127	762	1.69193	687
.258	.493975	1892	1.28204	354	2.09719	965	1.55622	168	3.54729	1336	.343365	758	1.68506	683
.259	.491883	1883	1.27850	353	2.08754	958	1.55454	168	3.53393	1325	.342607	755	1.67823	677
.260	.489800	1873	1.27497	351	2.07796	951	1.55286	167	3.52068	1314	.341852	752	1.67146	672
.261	.487727	1864	1.27146	351	2.06845	944	1.55119	166	3.50754	1305	.341100	748	1.66474	667
.262	.485663	1854	1.26795	348	2.05901	938	1.54953	165	3.49449	1295	.340352	745	1.65807	662
.263	.483609	1845	1.26447	348	2.04963	931	1.54788	165	3.48154	1285	.339607	742	1.65145	656
.264	.481564	1836	1.26099	346	2.04032	924	1.54623	164	3.46869	1275	.338865	738	1.64489	652
.265	.479528	1826	1.25753	345	2.03108	917	1.54459	164	3.45594	1266	.338127	735	1.63837	647
.266	.477502	1818	1.25408	344	2.02191	912	1.54295	163	3.44328	1256	.337392	731	1.63190	643
.267	.475484	1808	1.25064	342	2.01279	904	1.54132	162	3.43072	1246	.336661	728	1.62547	637
.268	.473476	1799	1.24722	341	2.00375	899	1.53970	161	3.41826	1237	.335932	725	1.61910	633
.269	.471477	1790	1.24381	340	1.99476	892	1.53809	161	3.40589	1228	.335207	721	1.61277	628
.270	.469487	1782	1.24041	339	1.98584	886	1.53648	161	3.39361	1219	.334486	719	1.60649	623
.271	.467505	1772	1.23702	338	1.97698	880	1.53487	159	3.38142	1210	.333767	716	1.60026	619
.272	.465533	1764	1.23364	338	1.96818	874	1.53328	159	3.36932	1201	.333051	712	1.59407	614
.273	.463569	1755	1.23028	335	1.95944	868	1.53169	159	3.35731	1192	.332339	709	1.58793	610
.274	.461614	1747	1.22693	334	1.95076	862	1.53010	158	3.34539	1184	.331630	707	1.58183	606
.275	.459667	1738	1.22359	333	1.94214	856	1.52852	157	3.33355	1175	.330923	703	1.57577	601
.276	.457729	1729	1.22026	331	1.93358	851	1.52695	157	3.32180	1166	.330220	700	1.56976	597
.277	.455800	1721	1.21695	331	1.92507	844	1.52538	156	3.31014	1158	.329520	697	1.56379	592
.278	.453879	1712	1.21364	329	1.91663	839	1.52382	155	3.29856	1149	.328823	694	1.55787	588
.279	.451967	1704	1.21035	328	1.90824	834	1.52227	155	3.28707	1141	.328129	691	1.55199	584
.280	.450063		1.20707		1.89990		1.52072		3.27566		.327438		1.54615	

NACA

TABLE II.– CONTINUED

t	g(t)		h(t)		i(t)		j(t)		k(t)		l(t)		m(t)	
.280	.450063	1896	1.20707	327	1.89990	827	1.52072	153	3.27566	1133	.327438	888	1.54615	580
.281	.448167	1888	1.20380	326	1.89163	823	1.51917	153	3.26433	1125	.326750	885	1.54035	576
.282	.446279	1879	1.20054	325	1.88340	817	1.51764	154	3.25308	1117	.326065	883	1.53459	572
.283	.444400	1871	1.19729	324	1.87523	811	1.51610	152	3.24191	1109	.325382	878	1.52887	568
.284	.442529	1863	1.19405	322	1.86712	807	1.51458	152	3.23082	1102	.324703	877	1.52319	564
.285	.440666	1855	1.19083	321	1.85905	801	1.51306	152	3.21980	1093	.324026	873	1.51755	559
.286	.438811	1847	1.18762	321	1.85104	795	1.51154	151	3.20887	1088	.323353	871	1.51196	556
.287	.436964	1839	1.18441	319	1.84309	791	1.51003	150	3.19801	1078	.322682	868	1.50640	553
.288	.435125	1832	1.18122	318	1.83518	785	1.50853	150	3.18723	1071	.322014	865	1.50087	548
.289	.433293	1823	1.17804	317	1.82733	781	1.50703	149	3.17652	1063	.321349	863	1.49539	545
.290	.431470	1816	1.17487	316	1.81952	775	1.50554	149	3.16589	1056	.320686	860	1.48994	540
.291	.429654	1808	1.17171	316	1.81177	771	1.50405	148	3.15533	1048	.320026	856	1.48454	538
.292	.427846	1800	1.16856	314	1.80406	766	1.50257	148	3.14484	1041	.319370	855	1.47916	533
.293	.426046	1792	1.16542	315	1.79640	760	1.50109	147	3.13443	1035	.318715	851	1.47383	530
.294	.424254	1785	1.16229	312	1.78880	756	1.49962	146	3.12408	1027	.318064	849	1.46853	526
.295	.422469	1778	1.15917	311	1.78124	752	1.49816	146	3.11381	1020	.317415	846	1.46327	523
.296	.420691	1770	1.15606	310	1.77372	746	1.49670	146	3.10361	1014	.316769	844	1.45804	518
.297	.418921	1762	1.15296	308	1.76626	742	1.49524	145	3.09347	1006	.316125	841	1.45285	516
.298	.417159	1756	1.14987	308	1.75884	737	1.49379	144	3.08341	1000	.315484	838	1.44769	512
.299	.415403	1747	1.14679	307	1.75147	733	1.49235	144	3.07341	993	.314846	836	1.44257	509
.300	.413656	1741	1.14372	305	1.74414	728	1.49091	144	3.06348	987	.314210	833	1.43748	506
.301	.411915	1733	1.14067	305	1.73686	724	1.48947	143	3.05361	979	.313577	831	1.43242	502
.302	.410182	1726	1.13762	304	1.72962	720	1.48804	142	3.04382	974	.312946	828	1.42740	499
.303	.408456	1719	1.13458	303	1.72242	714	1.48662	142	3.03408	967	.312318	828	1.42241	496
.304	.406737	1712	1.13155	302	1.71528	711	1.48520	142	3.02441	960	.311693	825	1.41745	492
.305	.405025	1704	1.12853	301	1.70817	706	1.48378	141	3.01481	954	.311070	823	1.41253	489
.306	.403321	1698	1.12552	300	1.70111	702	1.48237	140	3.00527	948	.310449	818	1.40764	486
.307	.401623	1690	1.12252	299	1.69409	698	1.48097	140	2.99579	942	.309831	818	1.40278	483
.308	.399933	1684	1.11953	298	1.68711	694	1.47957	140	2.98637	936	.309215	813	1.39795	480
.309	.398249	1677	1.11655	298	1.68017	688	1.47817	139	2.97701	929	.308602	810	1.39315	477
.310	.396572	1670	1.11357	296	1.67328	686	1.47678	139	2.96772	924	.307992	809	1.38838	474
.311	.394902	1663	1.11061	295	1.66642	681	1.47539	138	2.95848	917	.307383	806	1.38364	470
.312	.393239	1656	1.10766	295	1.65961	677	1.47401	137	2.94931	912	.306777	803	1.37894	468
.313	.391583	1649	1.10471	293	1.65284	674	1.47264	138	2.94019	906	.306174	802	1.37426	464
.314	.389934	1643	1.10178	293	1.64610	669	1.47126	136	2.93113	900	.305572	798	1.36962	462
.315	.388291	1637	1.09885	292	1.63941	666	1.46990	137	2.92213	894	.304974	797	1.36500	459
.316	.386654	1628	1.09593	291	1.63275	661	1.46853	135	2.91319	888	.304377	794	1.36041	456
.317	.385025	1623	1.09302	290	1.62614	658	1.46718	136	2.90430	883	.303783	792	1.35585	453
.318	.383402	1616	1.09012	289	1.61956	654	1.46582	135	2.89547	877	.303191	790	1.35132	450
.319	.381786	1610	1.08723	288	1.61302	650	1.46447	134	2.88670	872	.302601	787	1.34682	448
.320	.380176	1603	1.08435	287	1.60652	647	1.46313	134	2.87798	867	.302014	785	1.34234	444
.321	.378573	1597	1.08148	287	1.60005	642	1.46179	134	2.86931	861	.301429	783	1.33790	442
.322	.376976	1590	1.07861	286	1.59363	640	1.46045	133	2.86070	855	.300846	781	1.33348	439
.323	.375386	1584	1.07576	285	1.58723	635	1.45912	133	2.85215	851	.300265	778	1.32909	437
.324	.373802	1578	1.07291	284	1.58088	632	1.45779	132	2.84364	845	.299687	776	1.32472	433
.325	.372224	1571	1.07007	283	1.57456	628	1.45647	132	2.83519	840	.299111	774	1.32039	432
.326	.370653	1565	1.06724	283	1.56828	625	1.45515	131	2.82679	834	.298537	772	1.31607	428
.327	.369088	1559	1.06441	281	1.56203	622	1.45384	131	2.81845	830	.297965	770	1.31179	426
.328	.367529	1553	1.06160	281	1.55581	618	1.45253	131	2.81015	824	.297395	768	1.30753	423
.329	.365976	1547	1.05879	278	1.54963	614	1.45122	130	2.80191	820	.296827	765	1.30330	421
.330	.364429	1540	1.05600	279	1.54349	611	1.44992	129	2.79371	814	.296262	763	1.29909	418
.331	.362889	1534	1.05321	278	1.53738	607	1.44863	130	2.78557	810	.295699	761	1.29491	416
.332	.361355	1528	1.05043	278	1.53131	605	1.44733	129	2.77747	804	.295138	760	1.29075	413
.333	.359826	1522	1.04765	278	1.52526	601	1.44604	128	2.76943	800	.294578	757	1.28662	411
.334	.358304	1516	1.04489	276	1.51925	597	1.44476	128	2.76143	795	.294021	755	1.28251	408
.335	.356788	1511	1.04213	275	1.51328	595	1.44348	128	2.75348	790	.293466	752	1.27843	406
.336	.355277	1504	1.03938	274	1.50733	591	1.44220	127	2.74558	788	.292914	751	1.27437	404
.337	.353773	1498	1.03664	274	1.50142	588	1.44093	127	2.73772	781	.292363	748	1.27033	401
.338	.352274	1492	1.03390	272	1.49554	585	1.43966	128	2.72991	778	.291814	747	1.26632	398
.339	.350782	1487	1.03118	272	1.48969	582	1.43840	128	2.72215	771	.291267	745	1.26234	397
.340	.349295		1.02846		1.48387		1.43714		2.71444		.290722		1.25837	

NACA

TABLE II.– CONTINUED

t	g(t)		h(t)		i(t)		j(t)		k(t)		l(t)		m(t)	
.340	.349295	1481	1.02846	271	1.48387	578	1.43714	126	2.71444	768	.290722	542	1.25837	584
.341	.347814	1475	1.02575	270	1.47809	576	1.43588	125	2.70676	762	.290180	541	1.25443	582
.342	.346339	1469	1.02305	270	1.47233	572	1.43463	125	2.69914	756	.289639	539	1.25051	589
.343	.344870	1464	1.02035	269	1.46661	570	1.43338	124	2.69156	754	.289100	537	1.24662	587
.344	.343406	1458	1.01766	268	1.46091	566	1.43214	125	2.68402	749	.288563	535	1.24275	585
.345	.341948	1458	1.01498	267	1.45525	563	1.43089	126	2.67653	745	.288028	533	1.23890	583
.346	.340495	1446	1.01231	267	1.44962	561	1.42966	124	2.66908	740	.287495	531	1.23507	581
.347	.339049	1442	1.00964	265	1.44401	557	1.42842	122	2.66168	736	.286964	529	1.23126	578
.348	.337607	1435	1.00699	265	1.43844	555	1.42720	123	2.65432	732	.286435	527	1.22748	576
.349	.336172	1430	1.00434	265	1.43289	552	1.42597	122	2.64700	728	.285908	526	1.22372	574
.350	.334742	1425	1.00169	263	1.42737	549	1.42475	122	2.63972	724	.285382	525	1.21998	572
.351	.333317	1418	.999056	2628	1.42188	546	1.42353	121	2.63248	719	.284859	522	1.21626	570
.352	.331898	1414	.996427	2621	1.41642	543	1.42232	122	2.62529	715	.284337	519	1.21256	568
.353	.330484	1408	.993806	2615	1.41099	540	1.42110	120	2.61814	712	.283818	518	1.20888	566
.354	.329076	1403	.991191	2607	1.40559	538	1.41990	121	2.61102	707	.283300	516	1.20522	563
.355	.327673	1398	.988584	2601	1.40021	535	1.41869	120	2.60395	703	.282784	514	1.20159	562
.356	.326275	1392	.985983	2593	1.39486	532	1.41749	118	2.59692	700	.282270	513	1.19797	559
.357	.324883	1387	.983390	2587	1.38954	530	1.41630	120	2.58992	693	.281757	511	1.19438	558
.358	.323496	1381	.980803	2579	1.38424	527	1.41510	118	2.58297	691	.281246	508	1.19080	556
.359	.322115	1377	.978224	2573	1.37897	524	1.41392	119	2.57606	688	.280738	507	1.18724	553
.360	.320738	1371	.975651	2566	1.37373	521	1.41273	118	2.56918	684	.280231	506	1.18371	552
.361	.319367	1366	.973085	2558	1.36852	518	1.41155	118	2.56234	679	.279725	503	1.18019	550
.362	.318001	1361	.970527	2553	1.36333	517	1.41037	117	2.55555	677	.279222	502	1.17669	547
.363	.316640	1355	.967974	2545	1.35816	516	1.40920	118	2.54878	672	.278720	500	1.17322	546
.364	.315285	1351	.965429	2539	1.35303	512	1.40802	116	2.54206	669	.278220	498	1.16976	544
.365	.313934	1345	.962890	2532	1.34791	508	1.40686	117	2.53537	665	.277722	496	1.16632	542
.366	.312589	1340	.960358	2525	1.34283	507	1.40569	116	2.52872	661	.277226	495	1.16290	541
.367	.311249	1335	.957833	2519	1.33776	503	1.40453	116	2.52211	658	.276731	493	1.15949	538
.368	.309914	1331	.955314	2512	1.33273	502	1.40337	115	2.51553	654	.276238	492	1.15611	537
.369	.308583	1325	.952802	2506	1.32771	498	1.40222	115	2.50899	651	.275746	489	1.15274	534
.370	.307258	1320	.950296	2499	1.32273	497	1.40107	115	2.50248	647	.275257	488	1.14940	533
.371	.305938	1315	.947797	2493	1.31776	494	1.39992	114	2.49601	643	.274769	487	1.14607	531
.372	.304623	1311	.945304	2486	1.31282	491	1.39878	115	2.48958	640	.274282	484	1.14276	530
.373	.303312	1305	.942818	2480	1.30791	490	1.39763	113	2.48318	637	.273798	484	1.13946	527
.374	.302007	1301	.940338	2474	1.30301	486	1.39650	114	2.47681	633	.273314	481	1.13619	526
.375	.300706	1296	.937864	2467	1.29815	485	1.39536	113	2.47048	630	.272833	480	1.13293	525
.376	.299410	1290	.935397	2462	1.29330	482	1.39423	113	2.46418	626	.272353	478	1.12968	522
.377	.298120	1287	.932935	2454	1.28848	480	1.39310	112	2.45792	624	.271875	476	1.12646	521
.378	.296833	1281	.930481	2448	1.28368	478	1.39198	112	2.45168	619	.271399	475	1.12325	519
.379	.295552	1276	.928032	2442	1.27890	475	1.39086	112	2.44549	617	.270924	474	1.12006	517
.380	.294276	1272	.925590	2436	1.27415	473	1.38974	112	2.43932	613	.270450	471	1.11689	516
.381	.293004	1267	.923154	2431	1.26942	471	1.38862	111	2.43319	610	.269979	470	1.11373	514
.382	.291737	1263	.920723	2424	1.26471	469	1.38751	111	2.42709	607	.269509	469	1.11059	512
.383	.290474	1257	.918299	2418	1.26002	467	1.38640	110	2.42102	604	.269040	467	1.10747	511
.384	.289217	1253	.915881	2412	1.25535	464	1.38530	111	2.41498	600	.268573	465	1.10436	509
.385	.287964	1249	.913469	2406	1.25071	462	1.38419	110	2.40898	597	.268108	464	1.10127	508
.386	.286715	1243	.911063	2400	1.24609	460	1.38309	109	2.40301	595	.267644	463	1.09819	506
.387	.285472	1240	.908663	2394	1.24149	458	1.38200	110	2.39706	591	.267181	461	1.09513	504
.388	.284232	1234	.906269	2388	1.23691	456	1.38090	109	2.39115	588	.266720	459	1.09209	503
.389	.282998	1230	.903881	2382	1.23235	454	1.37981	109	2.38527	585	.266261	458	1.08906	501
.390	.281768	1226	.901499	2377	1.22781	451	1.37872	108	2.37942	582	.265803	456	1.08605	500
.391	.280542	1221	.899122	2371	1.22330	450	1.37764	108	2.37360	578	.265347	455	1.08305	298
.392	.279321	1217	.896751	2365	1.21880	448	1.37656	108	2.36781	576	.264892	453	1.08007	297
.393	.278104	1212	.894386	2359	1.21432	445	1.37548	108	2.36205	573	.264439	452	1.07710	295
.394	.276892	1207	.892027	2353	1.20987	444	1.37440	107	2.35632	570	.263987	450	1.07415	294
.395	.275685	1203	.889674	2348	1.20543	441	1.37333	107	2.35062	568	.263537	449	1.07121	292
.396	.274482	1199	.887326	2342	1.20102	440	1.37226	107	2.34494	564	.263088	448	1.06829	291
.397	.273283	1195	.884984	2337	1.19662	437	1.37119	106	2.33930	562	.262640	446	1.06538	289
.398	.272088	1190	.882647	2331	1.19225	436	1.37013	106	2.33368	558	.262194	444	1.06249	288
.399	.270898	1186	.880316	2325	1.18789	433	1.36907	106	2.32810	556	.261750	443	1.05961	286
.400	.269712		.877991		1.18356		1.36801		2.32254		.261307		1.05675	

NACA

TABLE II.– CONTINUED

t	g(t)		h(t)		i(t)		j(t)		k(t)		l(t)		m(t)	
.400	.269712	1181	.877991	2318	1.18356	432	1.36801	106	2.32254	559	.261307	442	1.05675	285
.401	.268531	1177	.875672	2315	1.17924	430	1.36696	106	2.31701	551	.260865	440	1.05390	284
.402	.267354	1173	.873357	2309	1.17494	428	1.36590	105	2.31150	547	.260425	439	1.05106	282
.403	.266181	1168	.871048	2303	1.17066	426	1.36485	104	2.30603	545	.259986	437	1.04824	281
.404	.265013	1165	.868745	2298	1.16640	424	1.36381	105	2.30058	542	.259549	436	1.04543	279
.405	.263848	1160	.866447	2292	1.16216	422	1.36276	104	2.29516	540	.259113	435	1.04264	278
.406	.262688	1156	.864155	2287	1.15794	421	1.36172	104	2.28976	536	.258678	433	1.03986	277
.407	.261532	1151	.861868	2282	1.15373	418	1.36068	103	2.28440	534	.258245	432	1.03709	275
.408	.260381	1148	.859586	2276	1.14955	417	1.35965	104	2.27906	532	.257813	430	1.03434	274
.409	.259233	1145	.857310	2272	1.14538	415	1.35861	103	2.27374	529	.257383	429	1.03160	273
.410	.258090	1139	.855038	2265	1.14123	413	1.35758	102	2.26845	526	.256954	428	1.02887	271
.411	.256951	1135	.852773	2261	1.13710	412	1.35656	103	2.26319	524	.256526	427	1.02616	270
.412	.255816	1131	.850512	2255	1.13298	410	1.35553	102	2.25795	521	.256099	426	1.02346	268
.413	.254685	1127	.848257	2250	1.12888	408	1.35451	102	2.25274	519	.255674	425	1.02078	268
.414	.253558	1123	.846007	2245	1.12480	406	1.35349	102	2.24755	516	.255251	423	1.01810	266
.415	.252435	1118	.843762	2240	1.12074	404	1.35247	101	2.24239	513	.254828	421	1.01544	265
.416	.251317	1115	.841522	2235	1.11670	403	1.35146	101	2.23726	512	.254407	420	1.01279	263
.417	.250202	1111	.839287	2229	1.11267	401	1.35045	101	2.23214	508	.253987	418	1.01016	262
.418	.249091	1106	.837058	2225	1.10866	399	1.34944	101	2.22706	506	.253569	417	1.00754	261
.419	.247985	1103	.834833	2219	1.10467	398	1.34843	100	2.22200	504	.253152	416	1.00493	260
.420	.246882	1099	.832614	2215	1.10069	396	1.34743	100	2.21696	502	.252736	415	1.00233	258
.421	.245783	1095	.830399	2209	1.09673	394	1.34643	100	2.21194	499	.252321	413	.999745	2573
.422	.244688	1090	.828190	2205	1.09279	393	1.34543	100	2.20696	497	.251908	412	.997172	2560
.423	.243598	1087	.825985	2199	1.08886	391	1.34443	99	2.20199	494	.251496	410	.994612	2549
.424	.242511	1083	.823786	2195	1.08495	389	1.34344	99	2.19705	492	.251086	410	.992063	2537
.425	.241428	1079	.821591	2190	1.08106	388	1.34245	98	2.19213	490	.250676	408	.989526	2524
.426	.240349	1076	.819401	2185	1.07718	386	1.34146	98	2.18723	487	.250268	407	.987002	2513
.427	.239273	1071	.817216	2179	1.07332	385	1.34048	99	2.18236	485	.249861	406	.984489	2501
.428	.238202	1068	.815037	2175	1.06947	383	1.33949	98	2.17751	483	.249455	404	.981988	2489
.429	.237134	1063	.812862	2171	1.06564	381	1.33851	98	2.17268	480	.249051	403	.979499	2478
.430	.236071	1061	.810691	2166	1.06183	380	1.33753	97	2.16788	478	.248648	402	.977021	2466
.431	.235010	1058	.808525	2160	1.05803	378	1.33656	98	2.16310	476	.248246	401	.974555	2455
.432	.233955	1053	.806365	2156	1.05424	376	1.33558	97	2.15834	474	.247845	399	.972100	2444
.433	.232902	1048	.804209	2151	1.05048	376	1.33461	97	2.15360	472	.247446	399	.969656	2432
.434	.231854	1045	.802058	2147	1.04672	374	1.33364	96	2.14888	468	.247047	397	.967224	2421
.435	.230809	1041	.799911	2141	1.04298	372	1.33268	96	2.14420	468	.246650	396	.964803	2410
.436	.229768	1038	.797770	2138	1.03926	371	1.33172	97	2.13952	465	.246254	394	.962393	2399
.437	.228730	1034	.795632	2132	1.03555	369	1.33075	95	2.13487	463	.245860	394	.959994	2388
.438	.227696	1030	.793500	2128	1.03186	368	1.32980	96	2.13024	461	.245466	392	.957606	2376
.439	.226666	1026	.791372	2124	1.02818	366	1.32884	96	2.12563	458	.245074	391	.955230	2367
.440	.225640	1022	.789248	2118	1.02452	365	1.32788	95	2.12105	457	.244683	390	.952863	2355
.441	.224618	1020	.787130	2115	1.02087	364	1.32693	95	2.11648	454	.244293	389	.950508	2345
.442	.223598	1015	.785015	2109	1.01723	362	1.32598	94	2.11194	453	.243904	388	.948163	2334
.443	.222583	1012	.782906	2105	1.01361	360	1.32504	95	2.10741	450	.243516	386	.945829	2324
.444	.221571	1008	.780801	2101	1.01001	359	1.32409	94	2.10291	448	.243130	386	.943505	2313
.445	.220563	1005	.778700	2096	1.00642	358	1.32315	94	2.09843	447	.242744	384	.941192	2303
.446	.219558	1001	.776604	2092	1.00284	356	1.32221	94	2.09396	444	.242360	383	.938889	2292
.447	.218557	997	.774512	2087	.999275	3549	1.32127	93	2.08952	442	.241977	382	.936597	2282
.448	.217560	994	.772425	2083	.995726	3536	1.32034	94	2.08510	440	.241595	381	.934315	2272
.449	.216566	991	.770342	2079	.992190	3523	1.31940	93	2.08070	439	.241214	379	.932043	2262
.450	.215575	987	.768263	2074	.988667	3509	1.31847	93	2.07631	436	.240835	378	.929781	2252
.451	.214588	983	.766189	2070	.985158	3495	1.31754	92	2.07195	434	.240456	377	.927529	2242
.452	.213605	980	.764119	2065	.981663	3481	1.31662	93	2.06761	433	.240079	376	.925287	2232
.453	.212625	976	.762054	2061	.978182	3469	1.31569	92	2.06328	430	.239703	376	.923055	2222
.454	.211649	973	.759993	2057	.974713	3455	1.31477	92	2.05898	429	.239327	374	.920833	2212
.455	.210676	970	.757936	2052	.971258	3442	1.31385	92	2.05469	427	.238953	373	.918621	2203
.456	.209706	966	.755884	2049	.967816	3429	1.31293	91	2.05042	425	.238580	372	.916418	2192
.457	.208740	963	.753835	2044	.964387	3416	1.31202	92	2.04617	423	.238208	370	.914226	2184
.458	.207777	959	.751791	2040	.960972	3403	1.31110	90	2.04194	421	.237838	370	.912042	2174
.459	.206818	956	.749751	2035	.957569	3390	1.31020	91	2.03773	419	.237468	369	.909868	2164
.460	.205862		.747716		.954179		1.30929		2.03354		.237099		.907704	

NACA

TABLE II.– CONTINUED

t	g(t)		h(t)		i(t)		j(t)		k(t)		l(t)		m(t)	
.460	.205862	852	.747716	2032	.954179	3377	1.30929	91	2.03354	418	.237099	368	.907704	2155
.461	.204910	849	.745684	2027	.950802	3365	1.30838	90	2.02936	415	.236731	366	.905549	2145
.462	.203961	846	.743657	2023	.947437	3352	1.30748	91	2.02521	413	.236365	365	.903404	2135
.463	.203015	843	.741634	2019	.944085	3339	1.30657	90	2.02108	413	.235999	364	.901268	2127
.464	.202072	839	.739615	2015	.940746	3327	1.30567	90	2.01695	410	.235635	363	.899141	2118
.465	.201133	835	.737600	2011	.937419	3315	1.30477	89	2.01285	409	.235272	363	.897023	2109
.466	.200198	833	.735589	2007	.934104	3302	1.30388	90	2.00876	406	.234909	361	.894914	2100
.467	.199265	829	.733582	2002	.930802	3290	1.30298	89	2.00470	405	.234548	360	.892814	2090
.468	.198336	826	.731580	1999	.927512	3278	1.30209	89	2.00065	403	.234188	360	.890724	2082
.469	.197410	822	.729581	1995	.924234	3266	1.30120	88	1.99662	402	.233828	358	.888642	2073
.470	.196488	820	.727586	1990	.920968	3254	1.30032	89	1.99260	400	.233470	357	.886569	2064
.471	.195568	816	.725596	1987	.917714	3242	1.29943	88	1.98860	398	.233113	356	.884505	2055
.472	.194652	813	.723609	1982	.914472	3230	.129855	89	1.98462	396	.232757	355	.882450	2046
.473	.193739	809	.721627	1979	.911242	3218	1.29766	88	1.98066	395	.232402	355	.880404	2038
.474	.192830	807	.719648	1975	.908024	3207	1.29678	87	1.97671	393	.232047	354	.878366	2030
.475	.191923	803	.717673	1971	.904817	3195	1.29591	88	1.97278	391	.231694	352	.876336	2020
.476	.191020	800	.715702	1967	.901622	3186	1.29503	87	1.96887	390	.231342	351	.874316	2012
.477	.190120	797	.713735	1963	.898439	3172	1.29416	87	1.96497	388	.230991	350	.872304	2004
.478	.189223	794	.711772	1959	.895267	3161	1.29329	87	1.96109	386	.230641	349	.870300	1996
.479	.188329	790	.709813	1955	.892106	3149	1.29242	87	1.95723	385	.230292	349	.868304	1986
.480	.187439	787	.707858	1952	.888957	3138	1.29155	86	1.95338	383	.229943	347	.866318	1979
.481	.186552	785	.705906	1947	.885819	3128	1.29069	87	1.94955	382	.229596	346	.864339	1971
.482	.185667	781	.703959	1944	.882693	3116	1.28982	86	1.94573	380	.229250	345	.862368	1962
.483	.184786	778	.702015	1940	.879577	3104	1.28896	86	1.94193	378	.228905	345	.860406	1954
.484	.183908	775	.700075	1936	.876473	3094	1.28810	86	1.93815	377	.228560	346	.858452	1946
.485	.183033	772	.698139	1933	.873379	3083	1.28724	85	1.93438	375	.228217	342	.856506	1938
.486	.182161	768	.696206	1929	.870296	3071	1.28639	85	1.93063	374	.227875	342	.854568	1930
.487	.181293	766	.694277	1925	.867225	3061	1.28554	86	1.92689	372	.227533	340	.852638	1922
.488	.180427	763	.692352	1921	.864164	3050	1.28468	85	1.92317	371	.227193	340	.850716	1914
.489	.179564	759	.690431	1917	.861114	3040	1.28383	84	1.91946	369	.226853	339	.848802	1907
.490	.178705	757	.688514	1914	.858074	3028	1.28299	85	1.91577	367	.226514	337	.846895	1898
.491	.177848	755	.686600	1911	.855046	3019	1.28214	84	1.91210	366	.226177	337	.844997	1891
.492	.176995	751	.684689	1906	.852027	3008	1.28130	85	1.90844	365	.225840	336	.843106	1883
.493	.176144	748	.682783	1903	.849019	2997	1.28045	84	1.90479	363	.225504	335	.841223	1876
.494	.175296	744	.680880	1900	.846022	2987	1.27961	83	1.90116	361	.225169	334	.839347	1867
.495	.174452	742	.678980	1895	.843035	2977	1.27878	84	1.89755	361	.224835	333	.837480	1861
.496	.173610	738	.677085	1893	.840058	2966	1.27794	84	1.89394	358	.224502	332	.835619	1852
.497	.172772	736	.675192	1888	.837092	2957	1.27710	83	1.89036	357	.224170	331	.833767	1846
.498	.171936	732	.673304	1885	.834135	2946	1.27627	83	1.88679	356	.223839	331	.831921	1837
.499	.171104	730	.671419	1882	.831189	2936	1.27544	83	1.88323	354	.223508	329	.830084	1831
.500	.170274	727	.669537	1878	.828253	2926	1.27461	83	1.87969	353	.223179	328	.828253	1823
.501	.169447	724	.667659	1874	.825327	2916	1.27378	82	1.87616	352	.222851	328	.826430	1816
.502	.168623	721	.665785	1871	.822411	2907	1.27296	83	1.87264	350	.222523	327	.824614	1808
.503	.167802	718	.663914	1867	.819504	2896	1.27213	82	1.86914	349	.222196	326	.822806	1802
.504	.166984	715	.662047	1864	.816608	2887	1.27131	82	1.86565	347	.221870	325	.821004	1794
.505	.166169	712	.660183	1861	.813721	2877	1.27049	82	1.86218	346	.221545	324	.819210	1787
.506	.165357	710	.658322	1857	.810844	2867	1.26967	81	1.85872	344	.221221	323	.817423	1780
.507	.164547	708	.656465	1853	.807977	2858	1.26886	82	1.85528	344	.220898	322	.815643	1773
.508	.163741	704	.654612	1850	.805119	2848	1.26804	81	1.85184	341	.220576	322	.813870	1766
.509	.162937	701	.652762	1847	.802271	2838	1.26723	81	1.84843	341	.220254	321	.812104	1759
.510	.162136	698	.650915	1843	.799432	2828	1.26642	81	1.84502	338	.219933	319	.810345	1752
.511	.161338	695	.649072	1840	.796603	2820	1.26561	81	1.84163	338	.219614	318	.808593	1745
.512	.160543	692	.647232	1837	.793783	2810	1.26480	80	1.83825	336	.219295	318	.806848	1738
.513	.159751	690	.645395	1833	.790973	2801	1.26400	81	1.83489	335	.218977	318	.805110	1732
.514	.158961	687	.643562	1830	.788172	2792	1.26319	80	1.83154	334	.218659	316	.803378	1725
.515	.158174	684	.641732	1826	.785380	2783	1.26239	80	1.82820	333	.218343	315	.801653	1718
.516	.157390	681	.639906	1824	.782597	2774	1.26159	80	1.82487	331	.218028	315	.799935	1711
.517	.156609	678	.638082	1820	.779823	2764	1.26079	80	1.82156	330	.217713	314	.798224	1705
.518	.155831	676	.636262	1816	.777059	2756	1.25999	78	1.81826	328	.217399	313	.796519	1698
.519	.155055	673	.634446	1814	.774303	2747	1.25920	80	1.81498	328	.217086	312	.794821	1692
.520	.154282		.632632		.771556		1.25840		1.81170		.216774		.793129	

NACA

TABLE II.– CONTINUED

t	g(t)		h(t)		i(t)		j(t)		k(t)		l(t)		m(t)	
.520	.154282	770	.632632	1810	.771556	2737	1.25840	79	1.81170	326	.216774	312	.793129	1685
.521	.153512	766	.630822	1806	.768819	2729	1.25761	79	1.80844	325	.216462	310	.791444	1678
.522	.152744	764	.629016	1804	.766090	2720	1.25682	78	1.80519	323	.216152	310	.789766	1672
.523	.151980	762	.627212	1800	.763370	2711	1.25603	78	1.80196	322	.215842	309	.788094	1666
.524	.151218	760	.625412	1797	.760659	2703	1.25524	78	1.79874	322	.215533	308	.786428	1659
.525	.150458	756	.623615	1794	.757956	2694	1.25446	79	1.79552	319	.215225	307	.784769	1653
.526	.149702	754	.621821	1791	.755262	2685	1.25367	78	1.79233	319	.214918	307	.783116	1647
.527	.148948	751	.620030	1788	.752577	2677	1.25289	78	1.78914	318	.214611	305	.781469	1640
.528	.148197	749	.618242	1784	.749900	2668	1.25211	78	1.78596	316	.214306	305	.779829	1634
.529	.147448	746	.616458	1781	.747232	2660	1.25133	78	1.78280	315	.214001	304	.778195	1628
.530	.146702	743	.614677	1778	.744572	2651	1.25055	77	1.77965	314	.213697	304	.776567	1622
.531	.145959	741	.612899	1775	.741921	2643	1.24978	78	1.77651	312	.213393	302	.774945	1615
.532	.145218	738	.611124	1772	.739278	2634	1.24900	77	1.77339	312	.213091	302	.773330	1610
.533	.144480	735	.609352	1769	.736644	2626	1.24823	77	1.77027	310	.212789	301	.771720	1603
.534	.143745	733	.607583	1765	.734018	2618	1.24746	77	1.76717	309	.212488	300	.770117	1598
.535	.143012	730	.605818	1763	.731400	2610	1.24669	77	1.76408	308	.212188	300	.768519	1591
.536	.142282	727	.604055	1759	.728790	2601	1.24592	76	1.76100	307	.211888	298	.766928	1585
.537	.141555	725	.602296	1757	.726189	2594	1.24516	77	1.75793	305	.211590	298	.765343	1580
.538	.140830	722	.600539	1753	.723595	2585	1.24439	76	1.75488	305	.211292	297	.763763	1573
.539	.140108	720	.598786	1751	.721010	2577	1.24363	76	1.75183	303	.210995	296	.762190	1568
.540	.139388	717	.597035	1747	.718433	2570	1.24287	76	1.74880	303	.210699	296	.760622	1562
.541	.138671	715	.595288	1744	.715863	2561	1.24211	76	1.74577	301	.210403	295	.759060	1556
.542	.137956	712	.593544	1741	.713302	2553	1.24135	76	1.74276	299	.210108	294	.757504	1550
.543	.137244	709	.591803	1738	.710749	2546	1.24059	75	1.73977	299	.209814	293	.755954	1545
.544	.136535	707	.590064	1735	.708203	2538	1.23984	76	1.73678	298	.209521	293	.754409	1539
.545	.135828	705	.588329	1732	.705665	2530	1.23908	75	1.73380	297	.209228	292	.752870	1533
.546	.135123	702	.586597	1730	.703135	2522	1.23833	75	1.73083	295	.208936	291	.751337	1528
.547	.134421	699	.584867	1726	.700613	2515	1.23758	75	1.72788	295	.208645	290	.749809	1522
.548	.133722	697	.583141	1723	.698098	2507	1.23683	74	1.72493	293	.208355	289	.748287	1516
.549	.133025	694	.581418	1721	.695591	2499	1.23609	75	1.72200	293	.208066	289	.746771	1511
.550	.132331	692	.579697	1718	.693092	2492	1.23534	74	1.71907	291	.207777	288	.745260	1505
.551	.131639	689	.577979	1714	.690600	2484	1.23460	75	1.71616	290	.207489	288	.743755	1500
.552	.130950	687	.576265	1712	.688116	2477	1.23385	74	1.71326	289	.207201	286	.742255	1494
.553	.130263	685	.574553	1708	.685639	2469	1.23311	74	1.71037	288	.206915	286	.740761	1489
.554	.129578	682	.572844	1706	.683170	2462	1.23237	74	1.70749	287	.206629	286	.739272	1483
.555	.128896	678	.571138	1703	.680708	2454	1.23163	73	1.70462	286	.206343	284	.737789	1478
.556	.128217	678	.569435	1701	.678254	2447	1.23090	74	1.70176	285	.206059	284	.736311	1473
.557	.127539	674	.567734	1697	.675807	2440	1.23016	73	1.69891	284	.205775	283	.734838	1468
.558	.126865	672	.566037	1695	.673367	2433	1.22943	74	1.69607	283	.205492	282	.733370	1462
.559	.126193	669	.564342	1692	.670934	2425	1.22869	73	1.69324	282	.205210	282	.731908	1457
.560	.125524	668	.562650	1689	.668509	2418	1.22796	73	1.69042	281	.204928	281	.730451	1451
.561	.124856	665	.560961	1686	.666091	2411	1.22723	73	1.68761	279	.204647	280	.729000	1447
.562	.124191	662	.559275	1683	.663680	2404	1.22650	72	1.68482	279	.204367	280	.727553	1441
.563	.123529	660	.557592	1681	.661276	2397	1.22578	73	1.68203	278	.204087	279	.726112	1436
.564	.122869	658	.555911	1678	.658879	2389	1.22505	72	1.67925	277	.203808	278	.724676	1431
.565	.122211	655	.554233	1675	.656490	2383	1.22433	73	1.67648	276	.203530	277	.723245	1426
.566	.121556	653	.552558	1672	.654107	2376	1.22360	72	1.67372	275	.203253	277	.721819	1421
.567	.120903	651	.550886	1670	.651731	2369	1.22288	72	1.67097	274	.202976	276	.720398	1415
.568	.120252	648	.549216	1667	.649362	2362	1.22216	71	1.66823	273	.202700	276	.718983	1411
.569	.119604	646	.547549	1664	.647000	2355	1.22145	72	1.66550	272	.202424	274	.717572	1406
.570	.118958	643	.545885	1661	.644645	2348	1.22073	72	1.66278	271	.202150	274	.716166	1401
.571	.118315	641	.544224	1659	.642297	2342	1.22001	71	1.66007	270	.201876	274	.714765	1395
.572	.117674	639	.542565	1656	.639955	2334	1.21930	71	1.65737	269	.201602	272	.713370	1391
.573	.117035	637	.540909	1653	.637621	2328	1.21859	71	1.65468	268	.201330	272	.711979	1386
.574	.116398	634	.539256	1651	.635293	2322	1.21788	71	1.65200	267	.201058	272	.710593	1382
.575	.115764	631	.537605	1648	.632971	2314	1.21717	71	1.64933	267	.200786	271	.709211	1376
.576	.115133	630	.535957	1645	.630657	2308	1.21646	71	1.64666	265	.200515	270	.707835	1371
.577	.114503	627	.534312	1643	.628349	2302	1.21575	71	1.64401	264	.200245	269	.706464	1367
.578	.113876	625	.532669	1640	.626047	2295	1.21504	70	1.64137	264	.199976	269	.705097	1362
.579	.113251	623	.531029	1637	.623752	2288	1.21434	70	1.63873	263	.199707	268	.703735	1357
.580	.112628		.529392		.621464		1.21364		1.63610		.199439		.702378	

NACA

TABLE II.– CONTINUED

t	g(t)		h(t)		i(t)		j(t)		k(t)		l(t)		m(t)	
.580	.112628	620	.529392	1665	.621464	2282	1.21364	70	1.63610	261	.199439	267	.702378	1353
.581	.112008	618	.527757	1662	.619182	2275	1.21294	71	1.63349	261	.199172	267	.701025	1348
.582	.111390	616	.526125	1630	.616907	2269	1.21223	69	1.63088	260	.198905	266	.699677	1343
.583	.110774	613	.524495	1627	.614638	2263	1.21154	70	1.62828	259	.198639	264	.698334	1338
.584	.110161	612	.522868	1624	.612375	2256	1.21084	70	1.62569	258	.198373	264	.696996	1334
.585	.109549	609	.521244	1622	.610119	2250	1.21014	68	1.62311	257	.198109	265	.695662	1329
.586	.108940	606	.519622	1620	.607869	2244	1.20945	70	1.62054	256	.197844	263	.694333	1325
.587	.108334	605	.518002	1618	.605625	2237	1.20875	68	1.61798	256	.197581	263	.693008	1320
.588	.107729	602	.516386	1614	.603388	2231	1.20806	69	1.61542	254	.197318	262	.691688	1316
.589	.107127	600	.514772	1612	.601157	2225	1.20737	69	1.61288	254	.197056	262	.690372	1311
.590	.106527	598	.513160	1609	.598932	2218	1.20668	69	1.61034	253	.196794	261	.689061	1307
.591	.105929	596	.511551	1607	.596713	2213	1.20599	69	1.60781	252	.196533	260	.687754	1302
.592	.105333	593	.509944	1604	.594500	2206	1.20530	68	1.60529	251	.196273	260	.686452	1298
.593	.104740	591	.508340	1601	.592294	2200	1.20462	69	1.60278	250	.196013	259	.685154	1293
.594	.104149	589	.506739	1599	.590094	2195	1.20393	68	1.60028	250	.195754	259	.683861	1289
.595	.103560	587	.505140	1597	.587899	2188	1.20325	68	1.59778	248	.195495	258	.682572	1285
.596	.102973	585	.503543	1594	.585711	2182	1.20257	68	1.59530	248	.195237	257	.681287	1280
.597	.102388	582	.501949	1591	.583529	2177	1.20189	68	1.59282	247	.194980	257	.680007	1276
.598	.101806	580	.500358	1590	.581352	2170	1.20121	68	1.59035	246	.194723	256	.678731	1271
.599	.101226	578	.498768	1586	.579182	2165	1.20053	68	1.58789	245	.194467	255	.677460	1266
.600	.100648	576	.497182	1584	.577017	2158	1.19985	67	1.58544	245	.194212	255	.676192	1263
.601	.100072	574	.495598	1582	.574859	2153	1.19918	68	1.58299	243	.193957	254	.674929	1259
.602	.0994979	5716	.494016	1578	.572706	2147	1.19850	67	1.58056	243	.193703	254	.673670	1254
.603	.0989263	5695	.492437	1577	.570559	2141	1.19783	67	1.57813	242	.193449	253	.672416	1251
.604	.0983568	5674	.490860	1575	.568418	2135	1.19716	67	1.57571	241	.193196	253	.671165	1246
.605	.0977894	5652	.489285	1572	.566283	2130	1.19649	67	1.57330	240	.192943	251	.669919	1242
.606	.0972242	5631	.487713	1570	.564153	2124	1.19582	67	1.57090	240	.192692	252	.668677	1238
.607	.0966611	5609	.486143	1567	.562029	2118	1.19515	67	1.56850	239	.192440	250	.667439	1234
.608	.0961002	5588	.484576	1565	.559911	2113	1.19448	66	1.56611	238	.192190	251	.666205	1230
.609	.0955413	5567	.483011	1562	.557798	2107	1.19382	67	1.56373	237	.191939	249	.664975	1225
.610	.0949846	5547	.481449	1561	.555691	2101	1.19315	66	1.56136	236	.191690	249	.663750	1222
.611	.0944299	5525	.479888	1558	.553590	2096	1.19249	66	1.55900	236	.191441	248	.662528	1217
.612	.0938774	5505	.478330	1555	.551494	2090	1.19183	66	1.55664	235	.191193	248	.661311	1214
.613	.0933269	5485	.476775	1553	.549404	2085	1.19117	66	1.55429	234	.190945	247	.660097	1210
.614	.0927786	5463	.475222	1551	.547319	2079	1.19051	66	1.55195	233	.190698	247	.658887	1205
.615	.0922323	5442	.473671	1548	.545240	2074	1.18985	66	1.54962	233	.190451	246	.657682	1202
.616	.0916881	5421	.472123	1546	.543167	2069	1.18919	65	1.54729	231	.190205	245	.656480	1197
.617	.0911460	5401	.470577	1544	.541098	2063	1.18854	66	1.54498	231	.189960	245	.655283	1194
.618	.0906059	5380	.469033	1542	.539035	2057	1.18788	65	1.54267	231	.189715	244	.654089	1190
.619	.0900679	5360	.467491	1539	.536978	2052	1.18723	65	1.54036	229	.189471	244	.652899	1186
.620	.0895319	5338	.465952	1537	.534926	2047	1.18658	65	1.53807	228	.189227	243	.651713	1182
.621	.0889980	5320	.464415	1535	.532879	2041	1.18593	65	1.53578	228	.188984	243	.650531	1178
.622	.0884660	5298	.462880	1532	.530838	2036	1.18528	65	1.53350	227	.188741	242	.649353	1175
.623	.0879362	5277	.461348	1530	.528802	2031	1.18463	65	1.53123	227	.188499	242	.648178	1170
.624	.0874085	5257	.459818	1528	.526771	2025	1.18398	65	1.52896	226	.188257	241	.647008	1167
.625	.0868828	5237	.458290	1525	.524746	2021	1.18333	64	1.52670	225	.188016	240	.645841	1165
.626	.0863591	5218	.456765	1524	.522725	2015	1.18269	65	1.52445	224	.187776	240	.644678	1160
.627	.0858373	5197	.455241	1521	.520710	2010	1.18204	64	1.52221	224	.187536	239	.643518	1155
.628	.0853176	5177	.453720	1519	.518700	2005	1.18140	64	1.51997	223	.187297	239	.642363	1152
.629	.0847999	5157	.452201	1516	.516695	1999	1.18076	64	1.51774	222	.187058	238	.641211	1148
.630	.0842842	5137	.450685	1515	.514696	1995	1.18012	64	1.51552	222	.186820	238	.640063	1145
.631	.0837705	5116	.449170	1512	.512701	1989	1.17948	64	1.51330	220	.186582	237	.638918	1141
.632	.0832587	5097	.447658	1510	.510712	1985	1.17884	64	1.51110	221	.186345	236	.637777	1137
.633	.0827490	5077	.446148	1508	.508727	1979	1.17820	63	1.50889	219	.186109	236	.636640	1133
.634	.0822413	5058	.444640	1506	.506748	1974	1.17757	64	1.50670	219	.185873	236	.635507	1130
.635	.0817355	5038	.443134	1503	.504774	1970	1.17693	63	1.50451	218	.185637	235	.634377	1126
.636	.0812317	5018	.441631	1501	.502804	1964	1.17630	63	1.50233	217	.185402	234	.633251	1123
.637	.0807299	4998	.440130	1499	.500840	1960	1.17567	64	1.50016	217	.185168	234	.632128	1119
.638	.0802301	4979	.438631	1497	.498880	1954	1.17503	63	1.49799	216	.184934	233	.631009	1116
.639	.0797322	4958	.437134	1495	.496926	1950	1.17440	63	1.49583	215	.184701	233	.629893	1112
.640	.0792363	4940	.435639	1492	.494976	1944	1.17378	63	1.49368	215	.184468	232	.628781	1109

NACA

TABLE II.– CONTINUED

t	g(t)		h(t)		i(t)		j(t)		k(t)		l(t)		m(t)	
.640	.0792363	4840	.435639	1482	.494976	1944	1.17378	63	1.49368	215	.184468	232	.628781	1109
.641	.0787423	4821	.434147	1481	.493032	1940	1.17315	63	1.49153	213	.184236	232	.627672	1108
.642	.0782502	4801	.432656	1488	.491092	1938	1.17252	63	1.48940	214	.184004	231	.626567	1101
.643	.0777601	4883	.431168	1486	.489157	1931	1.17189	62	1.48726	212	.183773	231	.625466	1099
.644	.0772718	4862	.429682	1485	.487226	1928	1.17127	63	1.48514	212	.183542	230	.624367	1094
.645	.0767856	4844	.428197	1482	.485301	1921	1.17064	62	1.48302	212	.183312	230	.623273	1091
.646	.0763012	4824	.426715	1478	.483380	1916	1.17002	62	1.48090	210	.183082	229	.622182	1088
.647	.0758188	4805	.425236	1478	.481464	1911	1.16940	62	1.47880	210	.182853	229	.621094	1085
.648	.0753383	4788	.423758	1476	.479553	1906	1.16878	62	1.47670	209	.182624	228	.620009	1081
.649	.0748597	4767	.422282	1478	.477647	1902	1.16816	62	1.47461	209	.182396	228	.618928	1077
.650	.0743830	4748	.420809	1472	.475745	1897	1.16754	62	1.47252	208	.182168	227	.617851	1075
.651	.0739082	4728	.419337	1469	.473848	1893	1.16692	61	1.47044	207	.181941	226	.616776	1071
.652	.0734354	4710	.417868	1467	.471955	1888	1.16631	62	1.46837	207	.181715	227	.615705	1067
.653	.0729644	4691	.416401	1466	.470067	1883	1.16569	61	1.46630	206	.181488	225	.614638	1065
.654	.0724953	4673	.414935	1466	.468184	1878	1.16508	61	1.46424	206	.181263	225	.613573	1061
.655	.0720280	4654	.413472	1461	.466305	1874	1.16447	62	1.46218	204	.181038	225	.612512	1058
.656	.0715626	4635	.412011	1459	.464431	1869	1.16385	61	1.46014	205	.180813	224	.611454	1054
.657	.0710991	4616	.410552	1457	.462562	1865	1.16324	61	1.45809	205	.180589	224	.610400	1051
.658	.0706375	4598	.409095	1455	.460697	1861	1.16263	61	1.45606	203	.180365	223	.609349	1048
.659	.0701777	4578	.407640	1453	.458836	1856	1.16202	60	1.45403	202	.180142	222	.608301	1045
.660	.0697199	4561	.406187	1451	.456980	1851	1.16142	61	1.45201	202	.179920	222	.607256	1042
.661	.0692638	4541	.404736	1449	.455129	1848	1.16081	61	1.44999	201	.179698	222	.606214	1038
.662	.0688097	4525	.403287	1447	.453281	1842	1.16020	60	1.44798	201	.179476	221	.605176	1035
.663	.0683572	4505	.401840	1445	.451439	1838	1.15960	60	1.44597	200	.179255	221	.604141	1033
.664	.0679067	4487	.400395	1443	.449600	1833	1.15900	61	1.44397	199	.179034	220	.603108	1028
.665	.0674580	4468	.398952	1441	.447767	1830	1.15839	60	1.44198	198	.178814	220	.602080	1026
.666	.0670112	4450	.397511	1439	.445937	1825	1.15779	60	1.44000	199	.178594	219	.601054	1023
.667	.0665662	4432	.396072	1437	.444112	1821	1.15719	60	1.43801	197	.178375	219	.600031	1019
.668	.0661230	4414	.394635	1435	.442291	1817	1.15659	60	1.43604	197	.178156	219	.599012	1017
.669	.0656816	4398	.393200	1433	.440474	1812	1.15599	59	1.43407	196	.177937	217	.597995	1013
.670	.0652420	4378	.391767	1432	.438662	1808	1.15540	60	1.43211	196	.177720	217	.596982	1011
.671	.0648042	4359	.390335	1429	.436854	1804	1.15480	60	1.43015	195	.177503	217	.595971	1007
.672	.0643683	4342	.388906	1427	.435050	1798	1.15420	59	1.42820	194	.177286	216	.594964	1004
.673	.0639341	4323	.387479	1425	.433251	1795	1.15361	59	1.42626	194	.177070	216	.593960	1001
.674	.0635018	4306	.386054	1424	.431456	1791	1.15302	60	1.42432	194	.176854	215	.592959	999
.675	.0630712	4287	.384630	1421	.429665	1787	1.15242	59	1.42238	192	.176639	215	.591960	995
.676	.0626425	4270	.383209	1419	.427878	1783	1.15183	59	1.42046	193	.176424	215	.590965	992
.677	.0622155	4252	.381790	1418	.426095	1779	1.15124	59	1.41853	191	.176209	214	.589973	989
.678	.0617903	4235	.380372	1416	.424316	1774	1.15065	58	1.41662	191	.175995	213	.588984	987
.679	.0613668	4216	.378956	1413	.422542	1770	1.15006	58	1.41471	191	.175782	213	.587997	983
.680	.0609452	4199	.377543	1412	.420772	1766	1.14948	59	1.41280	190	.175569	213	.587014	980
.681	.0605253	4181	.376131	1410	.419006	1763	1.14889	59	1.41090	189	.175356	212	.586034	978
.682	.0601072	4164	.374721	1408	.417243	1758	1.14830	58	1.40901	189	.175144	212	.585056	974
.683	.0596908	4146	.373313	1406	.415485	1754	1.14772	58	1.40712	188	.174932	211	.584082	972
.684	.0592762	4128	.371907	1405	.413731	1750	1.14714	59	1.40524	188	.174721	211	.583110	969
.685	.0588634	4112	.370502	1402	.411981	1746	1.14655	58	1.40336	187	.174510	210	.582141	966
.686	.0584522	4093	.369100	1401	.410235	1742	1.14597	58	1.40149	187	.174300	210	.581175	963
.687	.0580429	4076	.367699	1398	.408493	1738	1.14539	58	1.39962	186	.174090	210	.580212	960
.688	.0576353	4059	.366301	1397	.406755	1734	1.14481	58	1.39776	185	.173880	209	.579252	957
.689	.0572294	4042	.364904	1395	.405021	1730	1.14423	58	1.39591	185	.173671	208	.578295	955
.690	.0568252	4024	.363509	1393	.403291	1726	1.14365	57	1.39406	185	.173463	208	.577340	952
.691	.0564228	4007	.362116	1392	.401565	1722	1.14308	58	1.39221	183	.173255	208	.576388	949
.692	.0560221	3990	.360724	1389	.399843	1719	1.14250	57	1.39038	184	.173047	207	.575439	946
.693	.0556231	3973	.359335	1388	.398124	1714	1.14193	58	1.38854	183	.172840	207	.574493	946
.694	.0552258	3955	.357947	1386	.396410	1711	1.14135	57	1.38671	182	.172633	206	.573550	941
.695	.0548303	3938	.356561	1384	.394699	1706	1.14078	57	1.38489	182	.172427	206	.572609	938
.696	.0544364	3921	.355177	1382	.392993	1703	1.14021	57	1.38307	181	.172221	206	.571671	935
.697	.0540443	3904	.353795	1380	.391290	1700	1.13964	57	1.38126	181	.172015	205	.570736	933
.698	.0536539	3888	.352415	1379	.389590	1695	1.13907	57	1.37945	180	.171810	204	.569803	929
.699	.0532651	3870	.351036	1378	.387895	1691	1.13850	57	1.37765	179	.171606	204	.568874	928
.700	.0528781	3854	.349660	1375	.386204	1688	1.13793	57	1.37586	180	.171402	204	.567946	924

NACA

TABLE II.– CONTINUED

t	g(t)		h(t)		i(t)		j(t)		k(t)		l(t)		m(t)	
.700	.0528781	3854	.349660	1375	.386204	1688	1.13793	57	1.37586	180	.171402	204	.567946	924
.701	.0524927	3837	.348285	1374	.384516	1684	1.13736	57	1.37406	178	.171198	203	.567022	922
.702	.0521090	3820	.346911	1371	.382832	1680	1.13679	56	1.37228	178	.170995	203	.566100	919
.703	.0517270	3803	.345540	1370	.381152	1677	1.13623	57	1.37050	178	.170792	202	.565181	916
.704	.0513467	3788	.344170	1367	.379475	1673	1.13566	56	1.36872	177	.170590	202	.564265	914
.705	.0509681	3770	.342803	1366	.377802	1669	1.13510	56	1.36695	177	.170388	202	.563351	911
.706	.0505911	3753	.341437	1365	.376133	1665	1.13454	56	1.36518	176	.170186	201	.562440	908
.707	.0502158	3736	.340072	1362	.374468	1662	1.13398	57	1.36342	175	.169985	201	.561532	906
.708	.0498422	3720	.338710	1361	.372806	1658	1.13341	56	1.36167	175	.169784	200	.560626	903
.709	.0494702	3703	.337349	1359	.371148	1655	1.13285	55	1.35992	175	.169584	200	.559723	901
.710	.0490999	3687	.335990	1357	.369493	1651	1.13230	56	1.35817	174	.169384	200	.558822	898
.711	.0487312	3670	.334633	1356	.367842	1647	1.13174	56	1.35643	174	.169184	199	.557924	896
.712	.0483642	3654	.333277	1354	.366195	1644	1.13118	56	1.35469	173	.168985	198	.557028	893
.713	.0479988	3637	.331923	1352	.364551	1640	1.13062	55	1.35296	173	.168787	198	.556135	890
.714	.0476351	3621	.330571	1350	.362911	1637	1.13007	56	1.35123	172	.168589	198	.555245	888
.715	.0472730	3605	.329221	1348	.361274	1633	1.12951	55	1.34951	171	.168391	198	.554357	885
.716	.0469125	3588	.327872	1347	.359641	1629	1.12896	55	1.34780	172	.168193	197	.553472	883
.717	.0465537	3572	.326525	1345	.358012	1626	1.12841	56	1.34608	170	.167996	196	.552589	881
.718	.0461965	3556	.325180	1344	.356386	1622	1.12785	55	1.34438	170	.167800	196	.551708	877
.719	.0458409	3539	.323836	1341	.354764	1619	1.12730	55	1.34268	170	.167604	196	.550831	876
.720	.0454870	3523	.322495	1341	.353145	1616	1.12675	55	1.34098	169	.167408	195	.549955	873
.721	.0451347	3508	.321154	1338	.351529	1612	1.12620	55	1.33929	169	.167213	195	.549082	870
.722	.0447839	3491	.319816	1337	.349917	1609	1.12565	54	1.33760	169	.167018	195	.548212	868
.723	.0444348	3475	.318479	1335	.348308	1605	1.12511	55	1.33591	167	.166823	194	.547344	866
.724	.0440873	3459	.317144	1335	.346703	1601	1.12456	55	1.33424	168	.166629	194	.546478	863
.725	.0437414	3443	.315811	1332	.345102	1599	1.12401	54	1.33256	167	.166435	193	.545615	861
.726	.0433971	3427	.314479	1330	.343503	1595	1.12347	55	1.33089	166	.166242	193	.544754	858
.727	.0430544	3411	.313149	1328	.341908	1591	1.12292	54	1.32923	166	.166049	193	.543896	856
.728	.0427133	3395	.311821	1327	.340317	1588	1.12238	54	1.32757	166	.165856	192	.543040	853
.729	.0423738	3380	.310494	1325	.338729	1585	1.12184	54	1.32591	165	.165664	192	.542187	851
.730	.0420358	3363	.309169	1324	.337144	1582	1.12130	55	1.32426	165	.165472	191	.541336	849
.731	.0416995	3348	.307845	1321	.335562	1578	1.12075	54	1.32261	164	.165281	191	.540487	846
.732	.0413647	3332	.306524	1321	.333984	1575	1.12021	54	1.32097	165	.165090	190	.539641	844
.733	.0410315	3316	.305203	1318	.332409	1571	1.11967	53	1.31934	164	.164900	191	.538797	842
.734	.0406999	3301	.303885	1317	.330838	1568	1.11914	54	1.31770	163	.164709	189	.537955	839
.735	.0403698	3284	.302568	1315	.329270	1565	1.11860	54	1.31607	162	.164520	190	.537116	838
.736	.0400414	3270	.301253	1314	.327705	1562	1.11806	53	1.31445	162	.164330	189	.536278	834
.737	.0397144	3253	.299939	1312	.326143	1558	1.11753	54	1.31283	161	.164141	188	.535444	833
.738	.0393891	3238	.298627	1310	.324585	1556	1.11699	53	1.31122	161	.163953	189	.534611	830
.739	.0390653	3223	.297317	1308	.323029	1552	1.11646	54	1.30961	161	.163764	188	.533781	828
.740	.0387430	3207	.296008	1307	.321477	1548	1.11592	53	1.30800	160	.163576	187	.532953	825
.741	.0384223	3192	.294701	1306	.319929	1546	1.11539	53	1.30640	160	.163389	187	.532128	823
.742	.0381031	3176	.293395	1304	.318383	1542	1.11486	53	1.30480	159	.163202	187	.531305	821
.743	.0377855	3160	.292091	1302	.316841	1539	1.11433	53	1.30321	159	.163015	186	.530484	819
.744	.0374695	3146	.290789	1301	.315302	1536	1.11380	53	1.30162	159	.162829	186	.529665	817
.745	.0371549	3130	.289488	1298	.313766	1533	1.11327	53	1.30003	158	.162643	186	.528848	814
.746	.0368419	3114	.288189	1298	.312233	1530	1.11274	53	1.29845	157	.162457	185	.528034	812
.747	.0365305	3100	.286891	1296	.310703	1527	1.11221	52	1.29688	157	.162272	185	.527222	810
.748	.0362205	3084	.285595	1295	.309176	1523	1.11169	53	1.29531	157	.162087	184	.526412	808
.749	.0359121	3068	.284300	1293	.307653	1520	1.11116	52	1.29374	156	.161903	183	.525604	805
.750	.0356052	3054	.283007	1291	.306133	1518	1.11064	53	1.29218	156	.161718	183	.524799	803
.751	.0352998	3038	.281716	1290	.304615	1514	1.11011	52	1.29062	156	.161535	184	.523996	802
.752	.0349960	3024	.280426	1288	.303101	1511	1.10959	53	1.28906	155	.161351	183	.523194	798
.753	.0346936	3008	.279138	1287	.301590	1508	1.10906	52	1.28751	155	.161168	182	.522396	797
.754	.0343928	2993	.277851	1285	.300082	1505	1.10854	52	1.28596	154	.160986	183	.521599	795
.755	.0340935	2979	.276566	1284	.298577	1502	1.10802	52	1.28442	154	.160803	181	.520804	792
.756	.0337956	2963	.275282	1282	.297075	1499	1.10750	52	1.28288	153	.160622	182	.520012	791
.757	.0334993	2948	.274000	1280	.295576	1496	1.10698	52	1.28135	153	.160440	181	.519221	788
.758	.0332045	2933	.272720	1280	.294080	1493	1.10646	52	1.27982	153	.160259	181	.518433	786
.759	.0329112	2919	.271440	1277	.292587	1490	1.10594	51	1.27829	152	.160078	180	.517647	784
.760	.0326193	2904	.270163	1276	.291097	1487	1.10543	52	1.27677	152	.159898	181	.516863	782

NACA

TABLE II.– CONTINUED

t	g(t)		h(t)		i(t)		j(t)		k(t)		l(t)		m(t)	
.760	.0326193	2904	.270163	1278	.291097	1487	1.10543	52	1.27677	152	.159898	181	.516863	782
.761	.0323289	2888	.268887	1275	.289610	1484	1.10491	52	1.27525	151	.159717	179	.516081	779
.762	.0320401	2874	.267612	1273	.288126	1481	1.10439	51	1.27374	151	.159538	180	.515302	778
.763	.0317527	2859	.266339	1271	.286645	1478	1.10388	51	1.27223	151	.159358	179	.514524	776
.764	.0314668	2844	.265068	1270	.285167	1475	1.10337	52	1.27072	150	.159179	178	.513748	773
.765	.0311824	2830	.263798	1268	.283692	1472	1.10285	51	1.26922	150	.159001	179	.512975	772
.766	.0308994	2815	.262530	1267	.282220	1469	1.10234	51	1.26772	149	.158822	178	.512203	769
.767	.0306179	2800	.261263	1266	.280751	1467	1.10183	51	1.26623	149	.158644	177	.511434	768
.768	.0303379	2785	.259997	1264	.279284	1463	1.10132	51	1.26474	149	.158467	177	.510666	765
.769	.0300594	2771	.258733	1262	.277821	1461	1.10081	51	1.26325	148	.158290	178	.509901	763
.770	.0297823	2757	.257471	1261	.276360	1458	1.10030	51	1.26177	148	.158112	176	.509138	762
.771	.0295066	2741	.256210	1260	.274902	1455	1.09979	52	1.26029	147	.157936	176	.508376	759
.772	.0292325	2727	.254950	1258	.273447	1452	1.09927	50	1.25882	146	.157760	176	.507617	757
.773	.0289598	2713	.253692	1257	.271995	1449	1.09877	50	1.25734	146	.157584	176	.506860	755
.774	.0286885	2698	.252435	1255	.270546	1446	1.09827	51	1.25588	147	.157408	175	.506105	754
.775	.0284186	2683	.251180	1254	.269100	1444	1.09776	50	1.25441	146	.157233	175	.505351	751
.776	.0281503	2670	.249926	1252	.267656	1441	1.09726	51	1.25295	145	.157058	174	.504600	749
.777	.0278833	2655	.248674	1251	.266215	1438	1.09675	50	1.25150	145	.156884	174	.503851	748
.778	.0276178	2640	.247423	1249	.264777	1435	1.09625	50	1.25005	145	.156710	174	.503103	745
.779	.0273538	2626	.246174	1248	.263342	1432	1.09575	51	1.24860	145	.156536	173	.502358	744
.780	.0270912	2612	.244926	1246	.261910	1430	1.09524	50	1.24715	144	.156363	174	.501614	741
.781	.0268300	2598	.243680	1245	.260480	1427	1.09474	50	1.24571	143	.156189	172	.500873	740
.782	.0265702	2583	.242435	1244	.259053	1424	1.09424	50	1.24428	144	.156017	173	.500133	737
.783	.0263119	2570	.241191	1242	.257629	1421	1.09374	50	1.24284	143	.155844	172	.499396	736
.784	.0260549	2555	.239949	1241	.256208	1418	1.09324	50	1.24141	142	.155672	172	.498660	734
.785	.0257994	2540	.238708	1239	.254789	1416	1.09274	49	1.23999	142	.155500	171	.497926	732
.786	.0255454	2527	.237469	1238	.253373	1413	1.09225	50	1.23857	142	.155329	171	.497194	730
.787	.0252927	2513	.236231	1236	.251960	1411	1.09175	50	1.23715	142	.155158	171	.496464	728
.788	.0250414	2498	.234995	1235	.250549	1408	1.09125	49	1.23573	141	.154987	171	.495736	726
.789	.0247916	2484	.233760	1234	.249141	1405	1.09076	50	1.23432	141	.154816	170	.495010	724
.790	.0245432	2471	.232526	1232	.247736	1402	1.09026	49	1.23291	140	.154646	169	.494286	723
.791	.0242961	2456	.231294	1231	.246334	1400	1.08977	49	1.23151	140	.154477	170	.493563	720
.792	.0240505	2442	.230063	1229	.244934	1398	1.08928	50	1.23011	140	.154307	168	.492843	719
.793	.0238063	2429	.228834	1228	.243536	1394	1.08878	49	1.22871	139	.154138	169	.492124	717
.794	.0235634	2414	.227606	1227	.242142	1392	1.08829	49	1.22732	139	.153969	168	.491407	715
.795	.0233220	2401	.226379	1225	.240750	1389	1.08780	49	1.22593	139	.153801	168	.490692	713
.796	.0230819	2387	.225154	1224	.239361	1387	1.08731	49	1.22454	138	.153632	167	.489979	711
.797	.0228432	2372	.223930	1222	.237974	1384	1.08682	49	1.22316	138	.153465	168	.489268	710
.798	.0226060	2359	.222708	1222	.236590	1382	1.08633	49	1.22178	138	.153297	167	.488558	707
.799	.0223701	2345	.221486	1219	.235208	1379	1.08584	48	1.22040	137	.153130	167	.487851	707
.800	.0221356	2332	.220267	1219	.233829	1376	1.08536	49	1.21903	137	.152963	166	.487144	704
.801	.0219024	2318	.219048	1217	.232453	1374	1.08487	49	1.21766	136	.152797	167	.486440	702
.802	.0216706	2304	.217831	1215	.231079	1371	1.08438	48	1.21630	137	.152630	166	.485738	700
.803	.0214402	2290	.216616	1214	.229708	1369	1.08390	49	1.21493	136	.152464	165	.485038	699
.804	.0212112	2276	.215402	1213	.228339	1366	1.08341	48	1.21357	135	.152299	166	.484339	697
.805	.0209836	2263	.214189	1212	.226973	1363	1.08293	48	1.21222	135	.152133	164	.483642	695
.806	.0207573	2250	.212977	1210	.225610	1362	1.08245	49	1.21087	135	.151969	165	.482947	694
.807	.0205323	2235	.211767	1209	.224248	1358	1.08196	48	1.20952	135	.151804	164	.482253	691
.808	.0203088	2222	.210558	1207	.222890	1356	1.08148	48	1.20817	134	.151640	165	.481562	690
.809	.0200866	2208	.209351	1207	.221534	1354	1.08100	48	1.20683	134	.151475	163	.480872	688
.810	.0198657	2195	.208144	1204	.220180	1351	1.08052	48	1.20549	133	.151312	164	.480184	687
.811	.0196462	2182	.206940	1204	.218829	1349	1.08004	48	1.20416	134	.151148	163	.479497	685
.812	.0194280	2168	.205736	1202	.217480	1346	1.07956	48	1.20282	132	.150985	162	.478812	683
.813	.0192112	2154	.204534	1201	.216134	1343	1.07908	47	1.20150	133	.150823	163	.478129	681
.814	.0189958	2141	.203333	1199	.214791	1342	1.07861	48	1.20017	132	.150660	162	.477448	679
.815	.0187817	2128	.202134	1199	.213449	1339	1.07813	48	1.19885	132	.150498	162	.476769	678
.816	.0185689	2115	.200935	1198	.212110	1336	1.07765	47	1.19753	132	.150336	162	.476091	676
.817	.0183574	2101	.199739	1196	.210774	1334	1.07718	48	1.19621	131	.150174	161	.475415	673
.818	.0181473	2087	.198543	1194	.209440	1331	1.07670	47	1.19490	131	.150013	161	.474740	673
.819	.0179386	2075	.197349	1193	.208109	1330	1.07623	48	1.19359	130	.149852	160	.474067	671
.820	.0177311		.196156		.206779		1.07575		1.19229		.149692		.473396	

NACA

TABLE II.– CONTINUED

t	g(t)		h(t)		i(t)		j(t)		k(t)		l(t)		m(t)	
.820	.0177311	2061	.196156	1182	.206779	1326	1.07575	47	1.19229	131	.149692	161	.473396	669
.821	.0175250	2048	.194964	1180	.205453	1325	1.07528	47	1.19098	130	.149531	160	.472727	668
.822	.0173202	2035	.193774	1189	.204128	1322	1.07481	47	1.18968	129	.149371	160	.472059	666
.823	.0171167	2021	.192585	1185	.202806	1319	1.07434	48	1.18839	128	.149211	159	.471393	664
.824	.0169146	2008	.191397	1186	.201487	1317	1.07386	47	1.18710	130	.149052	159	.470729	663
.825	.0167138	1996	.190211	1185	.200170	1315	1.07339	47	1.18580	128	.148893	159	.470066	662
.826	.0165142	1982	.189026	1184	.198855	1313	1.07292	46	1.18452	129	.148734	159	.469404	659
.827	.0163160	1968	.187842	1183	.197542	1310	1.07246	47	1.18323	128	.148575	158	.468745	658
.828	.0161192	1956	.186659	1181	.196232	1308	1.07199	47	1.18195	127	.148417	158	.468087	656
.829	.0159236	1943	.185478	1180	.194924	1305	1.07152	47	1.18068	128	.148259	157	.467431	655
.830	.0157293	1929	.184298	1178	.193619	1303	1.07105	47	1.17940	127	.148102	156	.466776	652
.831	.0155364	1917	.183119	1178	.192316	1301	1.07058	46	1.17813	127	.147944	157	.466124	652
.832	.0153447	1904	.181941	1176	.191015	1298	1.07012	46	1.17686	126	.147787	157	.465472	650
.833	.0151543	1891	.180765	1175	.189716	1296	1.06966	47	1.17560	127	.147630	156	.464822	648
.834	.0149652	1877	.179590	1174	.188420	1294	1.06919	46	1.17433	125	.147474	156	.464174	646
.835	.0147775	1865	.178416	1172	.187126	1292	1.06873	47	1.17308	126	.147318	156	.463528	645
.836	.0145910	1852	.177244	1171	.185834	1289	1.06826	46	1.17182	125	.147162	156	.462883	644
.837	.0144058	1839	.176073	1170	.184545	1287	1.06780	46	1.17057	125	.147006	155	.462239	642
.838	.0142219	1826	.174903	1169	.183258	1285	1.06734	46	1.16932	125	.146851	155	.461597	640
.839	.0140393	1813	.173734	1167	.181973	1283	1.06688	46	1.16807	125	.146696	155	.460957	639
.840	.0138580	1801	.172567	1167	.180690	1280	1.06642	46	1.16682	124	.146541	154	.460318	637
.841	.0136779	1788	.171400	1164	.179410	1278	1.06596	46	1.16558	123	.146387	155	.459681	635
.842	.0134991	1775	.170236	1164	.178132	1276	1.06550	46	1.16435	124	.146232	154	.459046	634
.843	.0133216	1762	.169072	1163	.176856	1274	1.06504	46	1.16311	123	.146078	153	.458412	633
.844	.0131454	1749	.167909	1161	.175582	1272	1.06458	46	1.16188	123	.145925	153	.457779	631
.845	.0129705	1737	.166748	1160	.174310	1269	1.06412	45	1.16065	123	.145772	154	.457148	630
.846	.0127968	1724	.165588	1159	.173041	1267	1.06367	46	1.15942	122	.145618	152	.456518	627
.847	.0126244	1711	.164429	1158	.171774	1265	1.06321	46	1.15820	122	.145466	153	.455891	627
.848	.0124533	1699	.163271	1156	.170509	1263	1.06275	45	1.15698	122	.145313	152	.455264	625
.849	.0122834	1686	.162115	1155	.169246	1260	1.06230	46	1.15576	121	.145161	152	.454639	623
.850	.0121148	1674	.160960	1154	.167986	1258	1.06184	45	1.15455	121	.145009	151	.454016	622
.851	.0119474	1661	.159806	1153	.166728	1257	1.06139	45	1.15334	121	.144858	152	.453394	620
.852	.0117813	1648	.158653	1151	.165471	1254	1.06094	45	1.15213	121	.144706	151	.452774	619
.853	.0116165	1636	.157502	1150	.164217	1252	1.06049	46	1.15092	120	.144555	151	.452155	618
.854	.0114529	1624	.156352	1150	.162965	1250	1.06003	45	1.14972	120	.144404	150	.451537	615
.855	.0112905	1611	.155202	1147	.161715	1247	1.05958	45	1.14852	120	.144254	151	.450922	615
.856	.0111294	1598	.154055	1147	.160468	1246	1.05913	45	1.14732	120	.144103	150	.450307	613
.857	.0109696	1586	.152908	1146	.159222	1243	1.05868	45	1.14612	119	.143953	149	.449694	611
.858	.0108110	1574	.151762	1144	.157979	1241	1.05823	45	1.14493	119	.143804	150	.449083	611
.859	.0106536	1561	.150618	1143	.156738	1240	1.05778	44	1.14374	118	.143654	149	.448472	608
.860	.0104975	1548	.149475	1142	.155498	1237	1.05734	45	1.14256	119	.143505	149	.447864	607
.861	.0103426	1536	.148333	1141	.154261	1235	1.05689	45	1.14137	118	.143356	148	.447257	606
.862	.0101890	1525	.147192	1140	.153026	1233	1.05644	44	1.14019	118	.143208	149	.446651	604
.863	.0100365	1511	.146052	1138	.151793	1231	1.05600	45	1.13901	117	.143059	148	.446047	603
.864	.0098854	1498	.144914	1137	.150562	1228	1.05555	45	1.13784	118	.142911	148	.445444	601
.865	.0097355	1488	.143777	1136	.149334	1227	1.05510	44	1.13666	118	.142763	147	.444843	600
.866	.0095867	1475	.142641	1136	.148107	1225	1.05466	44	1.13550	117	.142616	148	.444243	599
.867	.0094392	1462	.141506	1134	.146882	1222	1.05422	45	1.13433	117	.142468	147	.443644	597
.868	.0092930	1451	.140372	1132	.145660	1221	1.05377	44	1.13316	116	.142321	147	.443047	596
.869	.0091479	1438	.139240	1132	.144439	1218	1.05333	44	1.13200	116	.142174	146	.442451	594
.870	.0090041	1426	.138108	1130	.143221	1217	1.05289	44	1.13084	115	.142028	146	.441857	593
.871	.0088615	1414	.136978	1129	.142004	1214	1.05245	45	1.12969	116	.141882	146	.441264	591
.872	.0087201	1402	.135849	1128	.140790	1213	1.05200	44	1.12853	115	.141736	146	.440673	590
.873	.0085799	1390	.134721	1127	.139577	1210	1.05156	44	1.12738	114	.141590	145	.440083	589
.874	.0084409	1377	.133594	1126	.138367	1209	1.05112	44	1.12624	115	.141445	145	.439494	587
.875	.0083032	1366	.132468	1124	.137158	1206	1.05068	43	1.12509	115	.141300	145	.438907	586
.876	.0081666	1353	.131344	1124	.135952	1205	1.05025	44	1.12394	114	.141155	145	.438321	585
.877	.0080313	1342	.130220	1122	.134747	1202	1.04981	44	1.12280	114	.141010	144	.437736	583
.878	.0078971	1330	.129098	1121	.133545	1201	1.04937	44	1.12166	113	.140866	145	.437153	582
.879	.0077641	1317	.127977	1120	.132344	1198	1.04893	43	1.12053	113	.140721	144	.436571	580
.880	.0076324		.126857		.131146		1.04850		1.11940		.140577		.435991	

NACA

TABLE II.– CONTINUED

t	g(t)		h(t)		i(t)		j(t)		k(t)		l(t)		m(t)	
.880	.0076324	1305	.126857	1118	.131146	1197	1.04850	44	1.11940	113	.140577	145	.435991	579
.881	.0075019	1294	.125738	1117	.129949	1194	1.04806	43	1.11827	113	.140434	144	.435412	578
.882	.0073725	1281	.124621	1117	.128755	1196	1.04763	44	1.11714	113	.140290	143	.434834	577
.883	.0072444	1270	.123504	1115	.127562	1190	1.04719	43	1.11601	112	.140147	143	.434257	575
.884	.0071174	1255	.122389	1115	.126372	1189	1.04676	43	1.11489	112	.140004	142	.433682	573
.885	.0069916	1246	.121274	1113	.125183	1187	1.04633	44	1.11377	111	.139862	142	.433109	573
.886	.0068670	1234	.120161	1112	.123996	1185	1.04589	43	1.11266	112	.139720	143	.432536	571
.887	.0067436	1222	.119049	1111	.122811	1183	1.04546	43	1.11154	111	.139577	141	.431965	570
.888	.0066214	1210	.117938	1110	.121628	1181	1.04503	43	1.11043	111	.139436	142	.431395	568
.889	.0065004	1199	.116828	1109	.120447	1179	1.04460	43	1.10932	111	.139294	141	.430827	567
.890	.0063805	1187	.115719	1107	.119268	1177	1.04417	43	1.10821	110	.139153	142	.430260	565
.891	.0062618	1175	.114612	1107	.118091	1176	1.04374	43	1.10711	111	.139011	140	.429694	565
.892	.0061443	1163	.113505	1105	.116915	1173	1.04331	43	1.10600	110	.138871	141	.429129	563
.893	.0060280	1151	.112400	1105	.115742	1172	1.04288	43	1.10490	109	.138730	140	.428566	562
.894	.0059129	1140	.111295	1103	.114570	1169	1.04245	43	1.10381	110	.138590	140	.428004	560
.895	.0057989	1128	.110192	1102	.113401	1168	1.04202	42	1.10271	109	.138450	140	.427444	560
.896	.0056861	1117	.109090	1101	.112233	1166	1.04160	43	1.10162	109	.138310	140	.426884	558
.897	.0055744	1105	.107989	1100	.111067	1164	1.04117	43	1.10053	109	.138170	139	.426326	557
.898	.0054639	1093	.106889	1099	.109903	1162	1.04074	42	1.09944	108	.138031	139	.425769	555
.899	.0053546	1082	.105790	1098	.108741	1161	1.04032	43	1.09836	109	.137892	139	.425214	554
.900	.0052464	1070	.104692	1097	.107580	1158	1.03989	42	1.09727	108	.137753	139	.424660	553
.901	.0051394	1058	.103595	1095	.106422	1157	1.03947	43	1.09619	107	.137614	138	.424107	552
.902	.0050336	1047	.102500	1095	.105265	1155	1.03904	42	1.09512	108	.137476	138	.423555	550
.903	.0049289	1035	.101405	1093	.104110	1153	1.03862	42	1.09404	107	.137338	138	.423005	550
.904	.0048254	1024	.100312	1093	.102957	1151	1.03820	42	1.09297	107	.137200	138	.422455	547
.905	.0047230	1013	.0992192	10914	.101806	1149	1.03778	43	1.09190	107	.137062	137	.421908	547
.906	.0046217	1000	.0981278	10903	.100657	1148	1.03735	42	1.09083	107	.136925	138	.421361	546
.907	.0045217	990	.0970375	10892	.0995094	11458	1.03693	42	1.08976	106	.136787	137	.420815	544
.908	.0044227	978	.0959483	10882	.0983636	11438	1.03651	42	1.08870	106	.136650	136	.420271	543
.909	.0043249	966	.0948601	10871	.0972197	11422	1.03609	42	1.08764	106	.136514	137	.419728	542
.910	.0042283	955	.0937730	10861	.0960775	11406	1.03567	42	1.08658	106	.136377	136	.419186	540
.911	.0041328	944	.0926869	10849	.0949372	11386	1.03525	41	1.08552	105	.136241	136	.418646	539
.912	.0040384	932	.0916020	10840	.0937986	11368	1.03484	42	1.08447	106	.136105	136	.418107	538
.913	.0039452	921	.0905180	10828	.0926618	11350	1.03442	42	1.08342	105	.135969	135	.417569	537
.914	.0038531	910	.0894351	10818	.0915268	11333	1.03400	42	1.08237	105	.135834	136	.417032	536
.915	.0037621	898	.0883533	10808	.0903935	11315	1.03358	41	1.08132	104	.135698	135	.416496	534
.916	.0036723	887	.0872725	10798	.0892620	11297	1.03317	42	1.08028	105	.135563	134	.415962	534
.917	.0035836	876	.0861927	10787	.0881323	11280	1.03275	41	1.07923	104	.135429	135	.415428	532
.918	.0034960	864	.0851140	10777	.0870043	11262	1.03234	42	1.07819	103	.135294	134	.414896	531
.919	.0034096	853	.0840363	10766	.0858781	11243	1.03192	41	1.07716	104	.135160	134	.414365	530
.920	.0033243	842	.0829597	10756	.0847536	11228	1.03151	41	1.07612	104	.135026	134	.413835	528
.921	.0032401	831	.0818841	10746	.0836308	11210	1.03110	42	1.07508	103	.134892	134	.413307	527
.922	.0031570	819	.0808095	10735	.0825098	11194	1.03068	41	1.07405	103	.134758	133	.412780	526
.923	.0030751	809	.0797360	10725	.0813904	11175	1.03027	41	1.07302	102	.134625	134	.412254	525
.924	.0029942	797	.0786635	10715	.0802729	11159	1.02986	41	1.07200	103	.134491	133	.411729	524
.925	.0029145	786	.0775920	10705	.0791570	11142	1.02945	41	1.07097	102	.134358	132	.411205	523
.926	.0028359	775	.0765215	10694	.0780428	11125	1.02904	42	1.06995	102	.134226	133	.410682	521
.927	.0027584	763	.0754521	10684	.0769303	11107	1.02862	41	1.06893	102	.134093	132	.410161	520
.928	.0026821	753	.0743837	10674	.0758196	11091	1.02821	40	1.06791	101	.133961	132	.409641	519
.929	.0026068	741	.0733163	10664	.0747105	11074	1.02781	41	1.06690	102	.133829	132	.409122	518
.930	.0025327	731	.0722499	10654	.0736031	11057	1.02740	41	1.06588	101	.133697	132	.408604	517
.931	.0024596	719	.0711845	10644	.0724974	11040	1.02699	41	1.06487	101	.133565	131	.408087	516
.932	.0023877	709	.0701201	10633	.0713934	11023	1.02658	41	1.06386	100	.133434	131	.407571	515
.933	.0023168	697	.0690568	10624	.0702911	11007	1.02617	40	1.06286	101	.133303	131	.407056	513
.934	.0022471	687	.0679944	10613	.0691904	10990	1.02577	41	1.06185	100	.133172	131	.406543	512
.935	.0021784	675	.0669331	10604	.0680914	10974	1.02536	41	1.06085	100	.133041	130	.406031	511
.936	.0021109	665	.0658727	10593	.0669940	10957	1.02495	40	1.05985	100	.132911	130	.405520	510
.937	.0020444	653	.0648134	10584	.0658983	10941	1.02455	41	1.05885	100	.132781	130	.405010	509
.938	.0019791	643	.0637550	10573	.0648042	10924	1.02414	40	1.05785	99	.132651	130	.404501	508
.939	.0019148	631	.0626977	10564	.0637118	10907	1.02374	40	1.05686	99	.132521	130	.403993	507
.940	.0018517		.0616413		.0626211		1.02334		1.05587		.132391		.403486	

NACA

TABLE II.– CONCLUDED

t	g(t)		h(t)		i(t)		j(t)		k(t)		l(t)		m(t)	
.940	.0018517	621	.0616413	10554	.0626211	10892	1.02334	41	1.05587	99	.132391	129	.403486	505
.941	.0017896	610	.0605859	10544	.0615319	10875	1.02293	40	1.05488	99	.132262	130	.402981	505
.942	.0017286	599	.0595315	10534	.0604444	10859	1.02253	40	1.05389	99	.132132	128	.402476	503
.943	.0016687	588	.0584781	10524	.0593585	10842	1.02213	40	1.05290	98	.132004	129	.401973	502
.944	.0016099	577	.0574257	10514	.0582743	10827	1.02173	41	1.05192	98	.131875	129	.401471	501
.945	.0015522	567	.0563743	10505	.0571916	10810	1.02132	40	1.05094	98	.131746	128	.400970	501
.946	.0014955	558	.0553238	10494	.0561106	10795	1.02092	40	1.04996	98	.131618	128	.400469	499
.947	.0014399	545	.0542744	10485	.0550311	10778	1.02052	40	1.04898	97	.131490	128	.399970	497
.948	.0013854	534	.0532259	10475	.0539533	10762	1.02012	40	1.04801	97	.131362	127	.399473	497
.949	.0013320	523	.0521784	10466	.0528771	10747	1.01972	39	1.04704	98	.131235	128	.398976	496
.950	.0012797	516	.0511318	10456	.0518024	10731	1.01933	40	1.04606	97	.131107	127	.398480	495
.951	.0012284	502	.0500862	10446	.0507293	10714	1.01893	40	1.04509	96	.130980	127	.397985	493
.952	.0011782	491	.0490416	10436	.0496579	10699	1.01853	40	1.04413	97	.130853	127	.397492	493
.953	.0011291	481	.0479980	10427	.0485880	10684	1.01813	39	1.04316	96	.130726	126	.396999	491
.954	.0010810	469	.0469553	10417	.0475196	10667	1.01774	40	1.04220	96	.130600	127	.396508	490
.955	.0010341	460	.0459136	10408	.0464529	10652	1.01734	40	1.04124	96	.130473	126	.396018	490
.956	.0009881	448	.0448728	10388	.0453877	10637	1.01694	39	1.04028	95	.130347	126	.395528	488
.957	.0009433	436	.0438330	10388	.0443240	10621	1.01655	40	1.03932	95	.130221	125	.395040	487
.958	.0008995	427	.0427942	10379	.0432619	10605	1.01615	38	1.03837	95	.130096	126	.394553	486
.959	.0008568	417	.0417563	10370	.0422014	10590	1.01576	39	1.03742	96	.129970	125	.394067	485
.960	.0008151	406	.0407193	10360	.0411424	10575	1.01537	40	1.03646	94	.129845	125	.393582	484
.961	.0007745	396	.0396833	10350	.0400849	10559	1.01497	39	1.03552	95	.129720	125	.393098	484
.962	.0007349	385	.0386483	10341	.0390290	10544	1.01458	39	1.03457	95	.129595	125	.392614	482
.963	.0006964	374	.0376142	10332	.0379746	10528	1.01419	38	1.03362	94	.129470	124	.392132	480
.964	.0006590	364	.0365810	10322	.0369218	10514	1.01380	40	1.03268	94	.129346	124	.391652	480
.965	.0006226	354	.0355488	10312	.0358704	10488	1.01340	39	1.03174	94	.129222	124	.391172	478
.966	.0005872	343	.0345176	10304	.0348206	10485	1.01301	39	1.03080	94	.129098	124	.390693	478
.967	.0005529	333	.0334872	10294	.0337723	10467	1.01262	39	1.02986	93	.128974	124	.390215	477
.968	.0005196	321	.0324578	10284	.0327256	10454	1.01223	39	1.02893	93	.128850	123	.389738	476
.969	.0004875	312	.0314294	10276	.0316802	10438	1.01184	39	1.02800	94	.128727	124	.389262	474
.970	.0004563	301	.0304018	10268	.0306364	10422	1.01145	38	1.02706	92	.128603	123	.388788	474
.971	.0004262	291	.0293752	10256	.0295942	10408	1.01107	39	1.02614	93	.128480	122	.388314	473
.972	.0003971	280	.0283496	10248	.0285534	10394	1.01068	39	1.02521	93	.128358	123	.387841	472
.973	.0003691	270	.0273248	10238	.0275140	10378	1.01029	39	1.02428	92	.128235	122	.387369	471
.974	.0003421	260	.0263010	10229	.0264762	10365	1.00990	38	1.02336	92	.128113	123	.386898	470
.975	.0003161	248	.0252781	10220	.0254399	10348	1.00952	39	1.02244	92	.127990	122	.386428	468
.976	.0002912	239	.0242561	10210	.0244050	10334	1.00913	38	1.02152	92	.127868	121	.385960	468
.977	.0002673	228	.0232351	10202	.0233716	10319	1.00874	38	1.02060	92	.127747	122	.385492	467
.978	.0002445	219	.0222149	10192	.0223397	10305	1.00836	39	1.01968	91	.127625	121	.385025	466
.979	.0002226	207	.0211957	10183	.0213092	10290	1.00797	38	1.01877	91	.127504	122	.384559	465
.980	.0002019	198	.0201774	10174	.0202802	10276	1.00759	38	1.01786	91	.127382	121	.384094	463
.981	.0001821	187	.0191600	10165	.0192526	10261	1.00721	39	1.01695	91	.127261	120	.383631	463
.982	.0001634	178	.0181435	10158	.0182265	10248	1.00682	38	1.01604	91	.127141	121	.383168	462
.983	.0001456	167	.0171279	10147	.0172019	10233	1.00644	38	1.01513	90	.127020	120	.382706	461
.984	.0001289	156	.0161132	10138	.0161786	10217	1.00606	38	1.01423	91	.126900	120	.382245	460
.985	.0001133	147	.0150994	10128	.0151569	10204	1.00568	38	1.01332	90	.126780	120	.381785	459
.986	.0000986	136	.0140866	10120	.0141365	10188	1.00529	38	1.01242	90	.126660	120	.381326	458
.987	.0000850	126	.0130746	10111	.0131176	10175	1.00491	38	1.01152	89	.126540	120	.380868	457
.988	.0000724	116	.0120635	10102	.0121001	10161	1.00453	38	1.01063	90	.126420	119	.380411	456
.989	.0000608	106	.0110533	10093	.0110840	10148	1.00415	38	1.00973	89	.126301	119	.379955	455
.990	.0000502	95	.0100440	10084	.0100694	10132	1.00377	38	1.00884	89	.126182	120	.379500	455
.991	.0000407	86	.0090356	10074	.0090562	10119	1.00339	38	1.00795	89	.126062	118	.379045	453
.992	.0000321	75	.0080282	10067	.0080443	10104	1.00301	37	1.00706	89	.125944	119	.378592	452
.993	.0000246	66	.0070215	10057	.0070339	10090	1.00264	38	1.00617	89	.125825	118	.378140	452
.994	.0000180	55	.0060158	10048	.0060249	10078	1.00226	38	1.00528	88	.125707	119	.377688	450
.995	.0000125	45	.0050110	10040	.0050173	10068	1.00188	38	1.00440	89	.125588	118	.377238	450
.996	.0000080	35	.0040070	10030	.0040110	10048	1.00150	37	1.00351	88	.125470	117	.376788	448
.997	.0000045	25	.0030040	10022	.0030062	10034	1.00113	38	1.00263	88	.125353	118	.376340	448
.998	.0000020	15	.0020018	10014	.0020028	10021	1.00075	37	1.00175	87	.125235	117	.375892	446
.999	.0000005	5	.0010004	10004	.0010007	10007	1.00038	38	1.00088	88	.125118	118	.375446	446
1.000	0		0		0		1		1		.125000		.375000	

NACA

FORM A: Calculation of sonic Flow Past Bo

Compute 6 sig. figs. or 7 dec.

Interpolate linearly in tables

1	Given M =	
2	Given γ =	
3	(1) × (1)	
4	(3) − 1	
5	√(4)	
6	1 ÷ (5)	
7	(2) + 1	
8	½(3) × (7) ÷ (4)	
9	(2) − 1	
10	½(3) × (8)	
11	(2) ÷ (9)	
12	2 + [(2) × (3)]	

		P_0	P_1	P_2	P_3	P_4	P_5	P_6
13	Given: × (*1)	*						
14	R (*R′)	*						
15	R′							
16	R″ (*0)	*						
17	(3) × (14)							
18	(13) − (17)							
19	(6) × (15)							
0d	(17) ÷ (13)							
0e	b(t) From Table I as funct. of (0d)							
0f	d(t)							
0g	e(t)							
0h	f(t)							
0s	(19) ÷ (0g)							
0t	(0s) × (0e) × (13)							
0u	(0s) × (0f)							
0v	(0s) × (0s)							
0w	(0s) × (0h) + (13)							
1d	(17) ÷ (13)							
1e	a(t) From Table I as functions of (1d)							
1f	b(t)							
1g	c(t)							
1h	d(t)							
1m	(18) − [All V's above]							
1n	(13) × (19)							
1s	(1m) ÷ (1n)							
1t	(13) × (13) × (13) × (1e)							
1u	(13) × (13) × (1f)							
1v	(13) × (13) × (1g)							
1w	(13) × (1h)							
2a	(13) − [(18) from column P_1 ⇧]							
2d	(17) ÷ (2a)							
2e	a(t) From Table I as functions of (2d)							
2f	b(t)							
2g	c(t)							
2h	d(t)							
2m	(19) − [All V's above]							
2n	(2a) × (2g)							
2s	(2m) ÷ (2n)							
2t	(25) × (2a) × (2a) × (2e)							
2u	(25) × (2a) × (2f)							
2v	(25) × (2a) × (2g)							
2w	(25) × (2h)							
3a	(13) − [(18) from column P_2 ⇧]							
3d	(17) ÷ (3a)							
3e	a(t) From Table I as functions of (3d)							
3f	b(t)							
3g	c(t)							
3h	d(t)							
3m	(19) − [All V's above]							
3n	(3a) × (3g)							
3s	(3m) ÷ (3n)							
3t	(35) × (3a) × (3a) × (3e)							
3u	(35) × (3a) × (3f)							
3v	(35) × (3a) × (3g)							
3w	(35) × (3h)							
4a	(13) − [(18) from column P_3 ⇧]							
4d	(17) ÷ (4a)							
4e	a(t) From Table I as functions of (4d)							
4f	b(t)							
4g	c(t)							
4h	d(t)							
4m	(18) − [All V's above]							
4n	(4a) × (4g)							
4s	(4m) ÷ (4n)							
4t	(45) × (4a) × (4a) × (4e)							
4u	(45) × (4a) × (4f)							
4v	(45) × (4a) × (4g)							
4w	(45) × (4h)							
5a	(13) − [(18) from column P_4 ⇧]							
5d	(17) ÷ (5a)							
5e	a(t) From Table I as functions of (5d)							
5f	b(t)							
5g	c(t)							
5h	d(t)							
5m	(19) − [All V's above]							
5n	(5a) × (5g)							
5s	(5m) ÷ (5n)							
5t	(55) × (5a) × (5a) × (5e)							
5u	(55) × (5a) × (5f)							
5v	(55) × (5a) × (5g)							
5w	(55) × (5h)							
6a	(13) − [(18) from column P_5 ⇧]							
6d	(17) ÷ (6a)							
6e	a(t) From Table I as functions of (6d)							
6f	b(t)							
6g	c(t)							
6h	d(t)							
6m	(19) − [All V's above]							
6n	(6a) × (6g)							
6s	(6m) ÷ (6n)							
6t	(65) × (6a) × (6a) × (6e)							
6u	(65) × (6a) × (6f)							
6v	(65) × (6a) × (6g)							
6w	(65) × (6h)							
20	Add all t's							
21	Add all u's							
22	Add all v's							
23	Add all w's							

		P_0	P_1	P_2	P_3
53	Copy (13)				
54	Copy (19)				
55	1 − (21)				
56	(3) × (46)				
57	(3) × (6) × (49)				
58	(3) × (52)				
59	(54) × (55)				
60	(59) − (57)				
0ss	(60) ÷ (54)				
0uu	(0ss) × (0u)				
0vv	(0ss) × (0v)				
1mm	(60) − [All VV's above]				
1ss	(1mm) ÷ (1m)				
1uu	(1ss) × (1u)				
1vv	(1ss) × (1v)				
2mm	(60) − [All VV's above]				
2ss	(2mm) ÷ (2m)				
2uu	(2ss) × (2u)				
2vv	(2ss) × (2v)				
3mm	(60) − [All VV's above]				
3ss	(3mm) ÷ (3m)				
3uu	(3ss) × (3u)				
3vv	(3ss) × (3v)				
4mm	(60) − [All VV's above]				
4ss	(4mm) ÷ (4m)				
4uu	(4ss) × (4u)				
4vv	(4ss) × (4v)				
5mm	(60) − [All VV's above]				
5ss	(5mm) ÷ (5m)				
5uu	(5ss) × (5u)				
5vv	(5ss) × (5v)				
6mm	(60) − [All VV's above]				
6ss	(6mm) ÷ (6m)				
6uu	(6ss) × (6u)				
6vv	(6ss) × (6v)				
61	(34) + All uu's				
62	(37) + All vv's				

Check: (22) should equal (19)

4h	a(t)
4m	(19) − [All V's above]
4n	(4a) × (4g)
4s	(4m) ÷ (4n)
4t	(4s) × (4a) × (4a) × (4e)
4u	(4s) × (4a) × (4f)
4v	(4s) × (4a) × (4g)
4w	(4s) × (4h)

4mm	(6a) − [All VV's above]
4ss	(4mm) ÷ (4m)
4uu	(4ss) × (4u)
4vv	(4ss) × (4v)

5a	(13) − [(18) from column P_4 ⇧]
5d	(17) ÷ (5a)
5e	a(t) } From Table I as functions of (5d)
5f	b(t)
5g	c(t)
5h	d(t)
5m	(19) − [All V's above]
5n	(5a) × (5g)
5s	(5m) ÷ (5n)
5t	(5s) × (5a) × (5a) × (5e)
5u	(5s) × (5a) × (5f)
5v	(5s) × (5a) × (5g)
5w	(5s) × (5h)

5mm	(6a) − [All VV's above]
5ss	(5mm) ÷ (5m)
5uu	(5ss) × (5u)
5vv	(5ss) × (5v)

6a	(13) − [(18) from column P_5 ⇧]
6d	(17) ÷ (6a)
6e	a(t) } From Table I as functions of (6d)
6f	b(t)
6g	c(t)
6h	d(t)
6m	(19) − [All V's above]
6n	(6a) × (6g)
6s	(6m) ÷ (6n)
6t	(6s) × (6a) × (6a) × (6e)
6u	(6s) × (6a) × (6f)
6v	(6s) × (6a) × (6g)
6w	(6s) × (6h)

6mm	(6a) − [All VV's above]
6ss	(6mm) ÷ (6m)
6uu	(6ss) × (6u)
6vv	(6ss) × (6v)

20	Add all t's
21	Add all u's
22	Add all v's
23	Add all w's
24	(5) × (23)
25	(24) + (14)
26	(4) × (23)
27	(25) + (26)
28	(15) × (27)
29	(16) + (28)
30	(8) × (14)
31	(30) × (24)
32	(30) × (28)
33	(30) × (27)
34	(31) − (20)
35	(32) − (21)
36	[(8)+1] × (24)
37	(33) − (36)
38	3 × (14) × (28)
39	3 × (14) × (27)
40	(39) − (24)
41	½ × (24) × (24)
42	(23) × (34)
43	(21) × (35)
44	(38) × (41)
45	(42)+(43)+(44)
46	(28) × (34)
47	(21) × (37)
48	(40) × (41)
49	(46)+(47)+(48)
50	(21) × (34)
51	(14) × (24) × (41)
52	(50) + (51)

Check: (22) should equal (19)

61	(32) + All uu's
62	(57) + All VV's

Check: (62) should equal (6

63	1 − (61)
64	(63) × (63)
65	(4) × (62) × (62)
66	1 − (64) − (65)
67	(10) × (66)
68	1 + (67)
69	$\log_{10}$ (68)
70	(11) × (69)
71	antilog (70)
72	(71) − 1
73	(12) × (72)

Second-order G_p Keep only 3 sig. f

74	(52) × (55)
75	(15) × (15)
76	1 − (74) − (75)
77	(10) × (76)
78	1 + (77)
79	$\log_{10}$ (78)
80	(11) × (79)
81	antilog (80)
82	(81) − 1
83	(12) × (82)

First-order G_p

Calculate only on each side of every corner (that
column which has a (Gs) somewhere above, and the c

mpute	5	$\sqrt{④}$		Interpolate	9	② − 1
ig. figs.	6	1 ÷ ⑤		linearly	10	½③ × ⑨
7 dec.	7	② + 1		in tables	11	② ÷ ⑧
	8	½③ × ⑦ ÷ ④			12	2 ÷ [② × ③]

FORM A: Calculation of 2nd-Order Supersonic Flow Past Body of Revolution

		P_0	P_1	P_2	P_3	P_4	P_5	P_6
53	Copy (13)							
54	Copy (19)							
55	1 − (21)							
56	⑨ × (45)							
57	③ × ⑥ × (49)							
58	③ × (52)							
59	(54) × (55)							
60	(59) − (57)							

0ss	(60) ÷ (54)							
0uu	(0ss) × (0u)							
0vv	(0ss) × (0v)							

1mm	(60) − [All VV's above]							
1ss	(1mm) ÷ (1m)							
1uu	(1ss) × (1u)							
1vv	(1ss) × (1v)							

⇧]

2mm	(60) − [All VV's above]							
2ss	(2mm) ÷ (2m)							
2uu	(2ss) × (2u)							
2vv	(2ss) × (2v)							

n P_2 ⇧]

of (3d)

3mm	(60) − [All VV's above]							
3ss	(3mm) ÷ (3m)							
3uu	(3ss) × (3u)							
3vv	(3ss) × (3v)							

, P_3 ⇧]

of (4d)

NACA-Langley - 7-25-52 - 1800

1mm	(60) − [All VV's above]	
1ss	(1mm) ÷ (1m)	
1uu	(1ss) × (1u)	
1vv	(1ss) × (1v)	

2mm	(60) − [All VV's above]	
2ss	(2mm) ÷ (2m)	
2uu	(2ss) × (2u)	
2vv	(2ss) × (2v)	

3mm	(60) − [All VV's above]	
3ss	(3mm) ÷ (3m)	
3uu	(3ss) × (3u)	
3vv	(3ss) × (3v)	

4mm	(60) − [All VV's above]	
4ss	(4mm) ÷ (4m)	
4uu	(4ss) × (4u)	
4vv	(4ss) × (4v)	

5mm	(60) − [All VV's above]	
5ss	(5mm) ÷ (5m)	
5uu	(5ss) × (5u)	
5vv	(5ss) × (5v)	

6mm	(60) − [All VV's above]	
6ss	(6mm) ÷ (6m)	
6uu	(6ss) × (6u)	
6vv	(6ss) × (6v)	

Check: (22) should equal (19)

61	(36) + All uu's	
62	(37) + All vv's	

Check: (82) should equal (59)

63	1 − (61)	
64	(63) × (63)	
65	(4) × (62) × (62)	
66	1 − (64) − (65)	
67	(10) × (66)	
68	1 + (67)	
69	$\log_{10}$ (68)	
70	(11) × (69)	
71	antilog (70)	
72	(71) − 1	
73	(12) × (72)	

Second-order C_p

Keep only 3 sig. figs. in final results

74	(58) × (55)	
75	(13) × (15)	
76	1 − (74) − (75)	
77	(10) × (76)	
78	1 + (77)	
79	$\log_{10}$ (78)	
80	(11) × (79)	
81	antilog (80)	
82	(81) − 1	
83	(12) × (82)	

First-order C_p

Calculate only on each side of every corner (that is, only for every column which has a (Cs) somewhere above, and the column preceding it).

Ca	(13) - [(18) from this col. ⇨]						
Cb	$\sqrt{(Ca)}$						
Cc	(Ca) × (Cb)						
Cd	(17) ÷ (Ca)						
Ce	h(t)						
Cf	j(t)						
Cg	k(t)						
Ch	l(t)						
Ci	m(t)						
Cm	(19) - [All V's above]						
Cs	(Cb) × (Cm)						
Ct	(Cs) × (Ce) × (Cb)						
Cu	(Cs) × (Cf) ÷ (Cb)						
Cv	(Cs) × (Cg) ÷ (Cb)						
Cw	- (Cs) × (Ch) ÷ (Cc)						
Cx	(Cs) × (Ci) ÷ (Cc)						
Ka	(13) - [(18) from this col. ⇨]						
Kb	$\sqrt{(Ka)}$						
Kd	(17) ÷ (Ka)						
Ke	g(t)						
Kf	h(t)						
Kg	i(t)						
Kh	j(t)						
Ki	k(t)						
Kj	3 × (5) × (Cw)						
Kk	7 × (4) × (Cw)						
Kl	[(27) from this col. ⇩] - (Kk)						
Km	(15) × (Kl)						
Kn	[(29) from this col. ⇩] - (Kj)						
Kp	(16) + (Km) - (Kn)						
Kq	(4) × (15)						
Kr	(5) - (Kq)						
Ks	(Kb) × (Kp) ÷ (Kr)						
Kt	(Ks) × (Ka) × (Kb) × (Ke)						
Ku	(Ks) × (Kb) × (Kf)						
Kv	(Ks) × (Kb) × (Kg)						
Kw	(Ks) × (Kh) ÷ (Kb)						
Kx	(Ks) × (Ki) ÷ (Kb)						

From Table II as functions of (Cd)

From Table II as functions of (Kd)

← 0 if no corner (No (Cw) ten rows above)

← -(Kk), -(Kj) if no previous column

FORM B: Insert at Corner or Curvature Discontinuity

Spp	(58) from this ⇧ col.						
Sqq	(58) from this col. ⇨						
Srr	(Spp) - (Sqq)						
Sss	(Srr) ÷ [First (Cu)]						
Suu	(Sss) × (Cw)						
Svv	(Sss) × (Cx)						

← 0 if no previous column

Cmm	(60) - [All VV's above]	

Omit these 3 rows if no corner (no (S-)'s directly above)

Kss	(Cmm) ÷ (Cm)						
Kuu	(Kss) × (Ku)						
Kvv	(Kss) × (Kv)						

Css	(Cmm) ÷ [First (Kx)]						
Cuu	(Css) × (Kw)						
Cvv	(Css) × (Kx)						

NACA-Langley - 7-25-52 - 1000