9118
NACA TN 2757

TECH LIBRARY KAFB, NM
0065871

# NATIONAL ADVISORY COMMITTEE FOR AERONAUTICS

## TECHNICAL NOTE 2757

## EXPERIMENTAL STUDIES OF NOISE FROM SUBSONIC JETS IN STILL AIR

By Leslie W. Lassiter and Harvey H. Hubbard

Langley Aeronautical Laboratory
Langley Field, Va.

Washington
August 1952

AFMDC
TECHNICAL LIBRARY
AFL 2811

TECH LIBRARY KAFB, NM
0065871

.K

NATIONAL ADVISORY COMMITTEE FOR AERONAUTICS

TECHNICAL NOTE 2757

# EXPERIMENTAL STUDIES OF NOISE FROM SUBSONIC JETS IN STILL AIR

By Leslie W. Lassiter and Harvey H. Hubbard

## SUMMARY

Experimental studies, which were conducted on the ground in still air, were made to evaluate some of the effects of parameters such as jet velocity, density, and turbulence level, as well as jet size, on the noise generated by subsonic jets. Most of the tests were conducted with simple model jets so that flow conditions could be closely controlled, and the results are compared with data obtained with a turbojet engine. The noise intensity was found to increase considerably with increases in exit velocity and turbulence level and by a lesser amount with increases in jet size and exit gas density, with the highest levels being generally observed downstream of the orifice and near the jet boundary. The jet-noise spectrum was found to be a function of jet size and observer's position; the spectrums having a relatively large low-frequency content are associated with the larger jet sizes and locations close to the jet axis.

The noise generated by a turbojet engine is shown to be closely related to that generated by simple model jets and an empirical relation is given to allow the extrapolation of available jet-noise data to other operating conditions.

## INTRODUCTION

The jet-noise problem has recently attracted much attention because of the increased use of jet engines for aircraft propulsion. The problem is of special concern in areas where people are frequently exposed to the noise either during static engine testing or low-altitude flight, as in take-off or landing. Though many studies of the problem have been made by various agencies and aircraft companies, the resulting information is difficult to correlate because of the use of many types of instrumentation which differ in regard to sensitivity, frequency response, and the manner in which data are recorded. The corresponding test conditions for experimental studies may also vary widely and, in the event that only a few data points are recorded, the directional properties of the noise source may

not be adequately accounted for. Hence, in many cases the information obtained is of a specific nature and has only limited use in estimating the noise from other engines or for other operating conditions of a given engine.

In general, studies of jet noise, of which references 1, 2, and 3 are typical, have shown that continuous-type jet engines are prolific generators of a random-noise spectrum which includes essentially all frequencies from the subaudible to the ultrasonic. The intensities in some parts of the spectrum are of such magnitude as to produce adverse physiological effects on man. The noise field is directional, with the bulk of the sound energy radiated to the rear of the engine.

In addition to noise that may be generated inside a turbojet engine by such sources as the turbine, the compressor, the burning processes, the air flow over the various aerodynamic surfaces, and other factors associated with combustion, the exhaust gas jet is known to be an intense source of noise as it mixes with the surrounding air and, in certain conditions of operation, may be the main source of noise from the engine. To date, few, if any, systematic studies have been reported in which the effects of the various jet parameters on this type of noise have been evaluated.

The present tests, which were conducted on the ground with the jets exhausting into the atmosphere, were made to evaluate some of the effects of parameters such as jet velocity, density, and turbulence, as well as jet size, on the noise generated in the jet mixing region. Most of the tests were conducted with simple model jets so that flow conditions could be closely controlled and so that the noise generated at points other than in the jet mixing region would be a minimum. During the course of the studies, jets of different mediums were tested and, for a limited number of tests, turbulence was purposely introduced upstream of the jet exit.

Since one of the purposes of the investigation was to obtain information useful in estimating and, if possible, alleviating the noise from turbojet engines, comparisons of simple model data and turbojet engine data are made in the present paper. The results obtained may also serve as a guide to theoretical studies and to further experimental work on jet noise.

## SYMBOLS

| | |
|---|---|
| Z | distance to observer, measured from center of jet exit, in. |
| D | jet nozzle diameter, in. |

| | |
|---|---|
| $Z/D$ | nondimensional distance parameter |
| $\psi$ | azimuth angle ($0^{\circ}$ is on jet axis downstream from exit), deg |
| $T$ | temperature, $^{\circ}R$ |
| $\rho$ | density, lb-sec$^2$/ft$^4$ |
| $V$ | jet velocity, ft/sec |
| $x$ | exponent of power |
| $a$ | speed of sound, ft/sec |
| $k$ | ratio of specific heats, $c_p/c_v$ |
| $c_p$ | specific heat at constant pressure, Btu/lb/$^{\circ}$F |
| $c_v$ | specific heat at constant volume, Btu/lb/$^{\circ}$F |
| $A$ | nozzle exit area, sq ft |
| $M$ | Mach number |
| $P$ | (initial) tank pressure, lb/sq in. abs |
| $\overline{p}$ | over-all sound pressure, dynes/cm$^2$ |
| $\overline{I}$ | over-all sound-pressure level, db $\left(\text{db} = 20 \log_{10} \overline{p}/0.0002\right)$ |
| $p$ | sound pressure of a band of frequencies, dynes/cm$^2$ |
| $I$ | sound-pressure level of a band of frequencies, db |

Subscripts:

| | |
|---|---|
| e | conditions at jet-nozzle exit |
| o | initial conditions in tank |
| max | maximum value |

## APPARATUS AND METHODS

Tests were conducted to measure and analyze the noise generated by subsonic air jets of various sizes. Quiescent dry air, initially at

approximately ambient-air temperature and 35 pounds absolute pressure, was exhausted from a 5000-cubic-foot tank through converging nozzles into the atmosphere. Five circular wooden nozzles having exit diameters of 0.75 inch, 1.5 inches, 3 inches, 6 inches, and 12 inches were used to produce the air jets. The nozzles were fitted to the end of the tank, in the manner shown in figure 1, so that the air entered the entrance fairing and passed through the nozzles without encountering any valves or other obstructions which might have generated additional turbulence in the stream. The configuration was thus intended to produce jets having low turbulence, except for a limited number of tests where high-level turbulence was purposely introduced by the use of two right-angle pipe bends external to the nozzle.

While the air in the tank was under pressure, the nozzle was sealed from the inside by means of a sliding door which pressed against a pneumatic pressure seal. At the beginning of each test, pressure in the seal was released and the door was allowed to drop clear by force of gravity. All runs were started at a higher tank pressure than that for which data were desired in order that flow through the nozzle would have time to stabilize.

Adiabatic flow relations were assumed to apply both in the tank and nozzles for these tests. Calculated exit conditions of temperature, density, and velocity are shown in figure 2 as a function of absolute tank pressure for the initial conditions of 35 pounds absolute pressure and a temperature of 540° R. The exit temperature and density are essentially constant during a given test but the velocity varies as a function of the tank pressure. The rate of this velocity variation is believed low enough to provide essentially steady-state conditions for all test configurations.

Sound measurements were obtained by placing the microphone at the same height above ground as the jet axis and recording data at 15° intervals in azimuth from 0° to 90° as defined by the coordinate system of figure 1. In order to obtain data at angles greater than 90°, a straight extension pipe was fixed to the nozzle. Aside from the air tank and the ground there were no other large reflecting surfaces in the sound field. Because of the directional characteristics of the noise source and the locations at which data were taken, it is believed that neither of these surfaces appreciably affected the results; therefore, the data presented are thought to have essentially free-space values. (Data are expressed in pressure units rather than in energy units throughout this paper.)

For a limited number of tests, where it was desirable to use various jet mediums for density studies, a tank of 100-cubic-foot capacity was used in conjunction with the 0.75-inch nozzle. The tank-nozzle configuration and the relative distances of the measurements were such that the data obtained with this tank are comparable to those obtained with the larger tank.

The instrumentation used in the tests is illustrated schematically in figure 3. Sound pressures were detected by a Massa Laboratories sound pressure measurement system calibrated to read in dynes per square centimeter. This system has a frequency response which is essentially flat from 20 to 20,000 cycles per second and is sensitive to frequencies as high as 38,000 cycles per second. Output of this system was subchanneled into six frequency bands by means of an NACA filter system. A multichannel oscillograph recorder was used to record simultaneous time histories of the sound-pressure levels in each band and the air pressure in the tank so that correlation of noise data and flow velocity could be made.

Before the records were taken, the signals in each channel were rectified; thus, the deflection of the oscillograph trace from its zero position was an indication of average sound pressure at any given time. A typical multichannel oscillograph record obtained with the instrumentation of figure 3 is shown in figure 4. The recorded noise signals are seen to fluctuate in magnitude even for nearly constant test conditions; therefore, in evaluating the records an average value of trace deflection as estimated by inspection was used. For a limited number of tests where steady-state conditions prevailed, a Panoramic Sonic Analyzer was used to obtain frequency analyses.

Some noise data were obtained with a turbojet engine for comparison with the model data. The engine was operated in an airplane secured to a concrete base for the tests. Instrumentation and techniques of measurement were similar to those used for the model tests except that the output of the Massa system was recorded on a Type PT-6 Magnecorder tape recorder to provide a permanent record for later analysis.

## RESULTS AND DISCUSSION

### Model Jets

The tests were made for the purpose of evaluating the effects of various parameters on the noise generated in the mixing region of a free jet; therefore, except in instances where the jet stream was purposely made highly turbulent, the air was caused to issue from a quiescent tank through a smooth converging nozzle in order that any noise due to protuberances and stream turbulence other than that in the mixing region could be kept to a minimum. The sound field was then determined from measurements obtained at various distances and azimuth angles in accordance with the coordinate system shown in figure 1. From these tests, noise data as a function of such parameters as

observer's distance and azimuth angle, jet size, exit gas velocity, density, temperature, and turbulence were obtained. The results are illustrated in figures 5 to 15.

Observer's distance.- In order to evaluate the effect of distance on the over-all sound pressure, data were obtained for each nozzle at various azimuth angles and at several distances greater than four times the nozzle diameter. The results of these measurements are shown in figure 5, in which the over-all pressure magnitudes relative to those at a distance of 48 inches are plotted as a function of distance in inches. Each data point represents the average of available measurements for the five jet sizes; hence, the figure is a composite plot of all the data obtained at the 30° and 90° azimuth angles with a jet velocity of 1000 feet per second. For comparison, a straight line describing the inverse square law, or the normal divergence of a sound wave with distance, is included. Because of the good agreement shown in figure 5 between the data points and the inverse square law, the inverse square law appears to be adequate for describing the sound-pressure variation in the range of distances included in the present tests. At distances of the order of several hundred feet or more, the pressure magnitudes may be noticeably influenced by atmospheric and terrain attentuation. This latter effect not only results in greater pressure reductions than predicted by the inverse square law but also alters the spectrum somewhat, since the extent of atmospheric and terrain attentuation is, in general, a function of frequency (ref. 4). In the region close to the jet exit the inverse square law may not apply because of the complexity of the jet as a noise source.

Jet size.- The effect of jet size on the over-all sound pressures generated by air jets is illustrated in figure 6, where over-all sound-pressure levels in decibels are plotted as a function of azimuth angle for three jet sizes. The curves shown were obtained from measurements at a distance of 48 inches and a jet velocity of 1000 feet per second. As expected, the higher sound pressures are associated with the large jet sizes. The average interval between curves is approximately 12 decibels, which corresponds to a factor of 4 in the pressure magnitudes. Since the corresponding jet diameters plotted in the figure also increase by a factor of 4, the over-all sound pressure apparently varies directly with the jet-exit diameter and, hence, with the square root of the jet-exit area.

Figure 5 illustrated the fact that over-all sound pressure varies inversely as the distance, and figure 6 indicated a direct relation of sound pressure to jet diameter; therefore, for given flow conditions, the parameter $Z/D$ may afford a convenient index for comparison of over-all pressures from various-size air jets. The results of such a comparison are illustrated in figure 7 in which over-all sound-pressure

levels at a distance of 16 exit diameters $\left(\frac{Z}{D} = 16\right)$ are plotted as a function of azimuth angle for five jet sizes. The figure indicates that all the jet sizes tested produce approximately the same over-all sound pressure at a given $Z/D$ value. Although some scatter in the data is evident, no systematic variation with jet size is apparent.

Although figure 7 shows approximate equality of over-all pressure magnitude at a given value of $Z/D$, noticeable differences occur in the frequency spectrums associated with jets of various sizes. This phenomenon is illustrated in figure 8 where sound pressures in six frequency bands between 20 and 38,000 cycles per second are shown for five jet sizes. The figure shows that the smaller air jets generate a predominantly high-frequency spectrum; whereas, the larger jets generate noise in which the low-frequency components are somewhat more intense than those in the upper part of the spectrum. Even so, the greatest part of this shift of energy among the spectrums occurs among the 0.75-inch, 1.50-inch, and 3.00-inch sizes, since low-frequency data for jets of 3.00-inch, 6.00-inch, and 12.00-inch diameter do not differ greatly.

Azimuth angle.- The over-all sound pressures that are measured at a given distance $Z$ vary considerably as a function of the azimuth angle $\psi$ and may also be affected by refraction in the jet stream. Both of these effects are illustrated in figure 9. The air-jet curve is a composite of the polar distribution data for the model air jets of the present tests and the helium-jet curve was obtained with a 0.75-inch-diameter jet.

The part of the air-jet curve between 15° and 90° is obtained from the faired data of figure 7 converted to nondimensional linear ratios, and data at angles larger than 90° were obtained with straight extension pipes. Although only a limited amount of data were obtained at 0°, the sound pressures at that point were small in comparison with those at other points equidistant from the jet exit. This finding is in agreement with the results of reference 5 in which the noise on the axis of a small air jet was indicated to be near zero intensity. The part of the curve between 0° and 15° was estimated since no measurements were made in that range. From the data of figure 9 the maximum sound radiation for the model air jets is concluded to occur at an azimuth angle of 15° or less. This occurrence of the maximum pressures at a point removed from the jet axis may be due, in part, to refraction of the sound waves traveling down the jet stream.

Wave-front refraction in a free jet results from the fact that sound is propagated at a higher velocity on the jet axis than it is near the fringe of the mixing region and thus the amount of refraction observed

would be a function of the flow velocity and the speed of sound of the jet medium. In order to study this phenomenon further, some additional tests were made with a helium jet and these results are also shown in figure 9. The helium data were recorded at the same exit Mach number as the air data but the helium-jet flow velocity and speed of sound were much higher (of the order of those encountered in high-temperature jets), as shown in table I.

The absolute pressure magnitudes are higher for helium jets but, for convenience, the data have been nondimensionalized in figure 9. The point of maximum sound pressure is seen to be shifted farther away from the jet axis than it is for the air jet and occurs near the 45° azimuth angle for the helium jet. The directional characteristics of the jet-noise field are thus noticeably affected by an apparent refraction phenomenon.

In addition to the over-all intensity variation shown in figure 9, a change also occurs in frequency content as a function of azimuth angle. This phenomenon is illustrated in figure 10, where the relative pressure magnitudes in three frequency bands are shown as a function of azimuth angle for a 1.5-inch-diameter air jet at an exit velocity of 900 feet per second. The largest pressures are seen to be in the lowest frequency band, with the point of maximum radiation occurring at an azimuth angle of 15° or less. The maximum pressures in the two higher bands occur at successively larger angles. In general, figure 10 indicates that with increasing azimuth angle the higher-frequency components of the spectrum have a tendency to become more pronounced. Although this trend was noted to apply to all jet sizes tested, in large jets the relative amplitudes of the low-frequency components are so great that they may predominate even at azimuth angles approaching 90°.

Density.- In order to examine the effects of variations in density of the jet stream on the jet-noise intensity, a limited number of tests, in which air, helium, and Freon 12 were used as the jet fluid, were made with a 0.75-inch nozzle. The range of flow parameters covered by these experiments may be observed from the values of table 1. The results of the tests are illustrated by the data of figure 11 in which over-all sound pressures from the 0.75-inch jet are plotted as a function of velocity for each of the mediums used. All data were measured at an azimuth angle of 90° where directional effects are small. The respective sets of data define power curves of approximately equal slope but which cover different pressure-magnitude and velocity ranges. If the air and helium curves are extrapolated in the subsonic direction and a comparison is made at equal velocity values with the Freon data, the medium of higher density is seen to produce the higher sound pressures. Numerically, the extrapolation indicates that the sound pressure ratios for the various mediums are approximately the same as their respective

density ratios. Thus, the sound pressure appears to vary directly as the stream density for a given exit velocity.

Further evidence of this relationship is afforded by the data presented in figure 12. The helium and Freon sound pressures of figure 11 have been multiplied by the air-helium and air-Freon density ratios, respectively, and the normalized data are then compared with the air data of figure 11. The normalized Freon and helium data are seen to fall on a single straight line with the air data.

Velocity.- During the course of the present studies the jet exit velocity was found to have large effects on the noise generated by a jet. One of these effects is illustrated in figure 13 in which the over-all sound pressures are plotted as a function of the velocity for two configurations of a 3-inch-diameter air jet. The lower curve represents data for a low-turbulence air jet and the upper curve represents data for a jet which was made highly turbulent by the addition of two $90^{\circ}$ pipe bends upstream of the jet exit. In both cases sound pressures increase as the velocity increases and are seen to be a power function of the velocity ($p \propto V^x$). The value of $x$ was found to vary from approximately 3.0 to 3.7 for a large number of tests of low-turbulence jets. In the case of the high-turbulence jets the value of $x$ is somewhat lower and was found to vary from approximately 2.1 to 3.0. Even though the slopes of the two curves shown in figure 13 are different, the sound pressures are higher for the high-turbulence jet at all velocities covered in the range of the tests.

In addition to changing the over-all intensity of jet noise, a change in exit velocity may also affect the frequency spectrum. Figure 14 illustrates qualitatively the variation observed with a 3-inch-diameter model air jet operating at three different velocities. The conditions under which these data were taken differed from those under which the data of figure 13 were obtained and the turbulence level is thought to be at some intermediate value. Data were recorded by means of a tape recorder and the tapes were then played back for analysis into a Panoramic Sonic Analyzer. The spectrums of figure 14 were recorded photographically from the viewing screen of the analyzer which indicates intensity on the vertical scale as a function of frequency on the horizontal scale. The shaded part of the record is an indication of the relative amplitudes of the various frequencies present. The records show that, as the jet velocity increases, the maximum amplitudes occur at higher frequencies.

Of significance is the fact that this effect of velocity as shown in figure 14 was not detected during operation of the low-turbulence jets and, hence, may be a function of the turbulence level in the jet stream.

Turbulence.- A limited number of studies, of the type conducted for relatively low-turbulence jets, were also made for the 0.75-inch-, 1.50-inch-, and 3.00-inch-diameter jets which were made highly turbulent by the addition of two 90° pipe bends external to the nozzle. The most obvious effect of an increase in turbulence is an increase in the sound pressures for any given jet exit velocity, as shown in figure 13. Figure 13 also shows that the sound pressure is a power function of the velocity and that the exponent of the power is somewhat lower than for a low-turbulence jet.

In order to estimate the relative levels of turbulence for the air-jet configurations of the present tests, turbulence measurements were made on the axis just outside of the exit of a 0.75-inch-diameter nozzle for a range of velocities up to approximately 600 feet per second. For the low-turbulence configuration, the axial velocity fluctuations were found to be approximately 1.0 percent of the mean flow velocity; whereas, for the high-turbulence configuration, the fluctuations varied from about 9.5 percent at 400 feet per second to about 6.6 percent at 600 feet per second. Although these measured turbulence levels are considerably higher than those for wind-tunnel flows, they are in quantitative agreement with the results of reference 6 for a 1.00-inch-diameter jet of low velocity. The decrease in the turbulence level with increased velocity for the high-turbulence configuration of the present tests may at least partly account for the lesser slope of the upper curve of figure 13.

Although the data of figure 13 are for one azimuth angle, similar results were obtained at other azimuth angles. The data of figure 15, for a velocity of 1000 feet per second and a $Z/D$ value of 16, show the over-all sound-pressure levels as a function of azimuth angle for three different sizes of high-turbulence jets. The dashed curve which represents the mean values for the high-turbulence jets may be compared to the characteristic distribution curve, which is replotted from figure 7, for low-turbulence jets. Mean sound pressures for the high-turbulence jets are seen to be from 8 to 15 decibels higher than the pressures for the low-turbulence jets at all azimuth angles. The greater differences occur at the larger azimuth angles and result in a distribution which is somewhat less directional than that for the low-turbulence jets. In general, the lower frequencies are most intense at the smaller azimuth angles as was illustrated in figure 10 for jets with a lower turbulence level.

## Comparison of Model and Engine Data

The tests described in the previous section dealt with model jets and were concerned with the evaluation of the effects of various geometric and flow parameters on the jet noise generated. The noise from

the mixing region of the jet was shown to be a function of the size of the jet and also of its velocity, density, and turbulence level. An interesting comparison can be made between the results thus obtained with simple model jets and those obtained with a turbojet engine, an apparently more complex source of noise because of its internal appendages, burning processes, and so forth.

Spectrums.- A comparison of the intensity levels in various frequency bands of the noise from a turbojet engine and a model air jet of nearly equal size is given in figure 16. The comparison is made at a $Z/D$ value of 16 and at an azimuth angle of $90^{\circ}$. The model-jet data have been extrapolated to the turbojet exit conditions of density and velocity on the basis of model-jet results illustrated in figures 11 and 13. Figure 16 shows that, although differences in the intensities exist because of possible differences in the turbulence levels and directional properties, the two spectrums are in very good qualitative agreement.

Velocity.- The effect of exit gas velocity on the intensity of the over-all noise generated by a turbojet engine is illustrated in figure 17, along with comparable data for low- and high-turbulence air jets. Data were obtained for a $Z/D$ value of 16 and an azimuth angle of $90^{\circ}$, with the model-jet data adjusted to the engine exhaust density for comparison. The sound pressures are seen to increase rapidly as a function of the turbojet velocity in a manner similar to that of the air jets; however, the slope of the curve is greater at the higher velocities than at the lower ones. A study of the spectrums indicated that there are important discrete frequencies in the spectrums at low engine speeds, whereas at the higher speeds they are not noticeable. Apparently, the noise from the mixing region of the jet is of sufficient intensity at the higher jet velocities to override any discrete-frequency noise due to the turbine, resonances, or other factors. The largest slope of the turbojet-noise curve as a function of velocity is approximately 3.0; whereas, the model-jet-noise curves for varying turbulence levels varied in slope from approximately 2.1 to 3.7 for a large number of cases.

Azimuth angle.- The directional properties of turbojet-engine noise are illustrated qualitatively in figure 18, where relative over-all sound-pressure magnitudes are plotted as a function of azimuth angle. In addition, the directional patterns for an air and a helium jet from figure 9 are included for comparison. The helium and air data are for jets having both higher and lower values of velocity, speed of sound, and density (see table I) than the corresponding quantities for the turbojet exhaust. Figure 18 shows that the turbojet noise is a maximum at an azimuth angle of approximately $30^{\circ}$ from the jet axis and, hence, lies between the two extreme values of the model tests. Thus, in regard to the directional properties of jet-exhaust noise, the quantities which

apparently are significant for simple model jets may also apply to turbojet engines.

Turbulence.- The results shown in figures 16, 17, and 18 lead to the general conclusion that the noise generated by a turbojet engine, at least for the high-thrust conditions, is very closely related to the noise generated by simple model jets. For these conditions of operation (where the jet exit velocities are high), the noise from the mixing region is apparently of sufficient intensity to override the discrete-frequency noise from other sources. Data for model jets have shown that turbulence induced in the jet fluid results in increased noise; hence, it is of interest to estimate the amount of noise from the turbojet engine that may be due to additional turbulence of the jet exhaust because of internal appendages, burning processes, and other factors.

This effect of turbulence on the noise can be evaluated from figure 19 in which the data of figure 15, for low- and high-turbulence air jets, are replotted and shown with noise data for a turbojet engine. The air-jet data have been adjusted to the density and velocity values of the turbojet exhaust; thus, the three curves of figure 19 are comparable except for the differences in their directional characteristics. The noise levels for the turbojet are generally higher than those for the low-turbulence air jet and are generally lower than those for the high-turbulence air jet. The turbulence level of the turbojet may therefore be at some value between the extremes of the air-jet tests. The solid curve of figure 19 may thus correspond to the minimum noise levels obtainable for jets of this velocity and density because of its relatively low turbulence level. The additional turbulence due to the turbojet engine may add 5 to 10 decibels to the exhaust noise levels over those estimated for a comparable jet with a minimum of turbulence.

## General Considerations

Sources of jet noise.- Since these present experimental studies have substantiated the fact that intense noise is generated in the mixing region of a jet, some experiments were conducted to define more completely these noise sources. A directional type of microphone and various recording equipment were used for studies involving a turbojet engine and some smaller model jets. The over-all noise in these cases appeared to emanate from a region downstream of the jet exit at a distance of several jet diameters. Further tests were made with a model jet in which filters were used to select certain frequency bands for study. The results of these tests indicate that the higher frequency components emanate from the region immediately outside the jet pipe; whereas, the lower frequency components appear to be generated at points several diameters downstream of the exit.

Further evidence that the jet mixing region is a complex pattern of noise sources was obtained from tests where the microphone was stationed along a given azimuth line at points progressively nearer the jet. In general, the pressure amplitudes in all frequency bands increase as the distance $Z$ is decreased; however, at azimuth angles near the jet boundary a certain range of distances was reached in the immediate vicinity of the jet where the pressures in the range of 20 to 3000 cycles per second no longer increased but began to decrease as though the microphone were then being moved away from the source.

Estimation of jet noise levels.- An estimation of the noise levels associated with various jet engines is frequently desirable at an early stage in their development. Since some of the significant parameters in the generation of jet noise have been evaluated in the present tests, the results may be used in extrapolating available jet-noise data to various other static operating conditions. If the directional characteristics and the turbulence level of the turbojet of figure 19 are assumed to be representative of this type of engine, extrapolations to other configurations may be given approximately by the following relation which is based on the experiments reported herein:

$$\frac{\overline{p}'}{\overline{p}} = \left(\frac{Z}{Z'}\right)\left(\frac{\rho'}{\rho}\right)\left(\frac{A'}{A}\right)^{0.5}\left(\frac{V'}{V}\right)^{3.0}$$

where over-all sound pressure $\overline{p}$, distance $Z$, nozzle exit area $A$, jet density $\rho$, and jet velocity $V$ may be evaluated from figure 19 and the primed quantities are those associated with the new configuration. The jet temperature is believed to have no direct effect on the noise generated except insofar as it may affect the jet density, velocity, and turbulence, which are known to be significant parameters. Changes in thrust caused by increasing the area for the same flow conditions will result in a small change in $\overline{p}$; whereas, an increase in jet velocity may result in a large change in $\overline{p}$. These data are believed valid only for the subsonic velocity range since shock-wave formations may appreciably affect the results.

## CONCLUSIONS

Experimental studies of the noise from the mixing region of subsonic jets indicate the following conclusions:

1. The mixing region of a jet is a complex noise generator, as evidenced by the fact that the apparent sources of the high-frequency components are near the jet exit, whereas the low-frequency components appear to emanate from points farther downstream.

2. For the distance range of the tests, the over-all sound pressures vary inversely as the distance along a given azimuth. This result may

not apply for large distances because of atmospheric and terrain attenuation, nor for very small distances because of the complexity of the jet as a noise source.

3. At a given distance and for given flow conditions, the over-all sound pressures increase directly as the orifice diameter increases.

4. The over-all sound pressures for various sizes of jets are approximately equal at equal values of the nondimensional distance parameter (distance/diameter). The frequency spectrums differ in accordance with the jet size, the spectrums with the greater low-frequency content being associated with the larger jets.

5. The jet-noise radiation pattern is highly directional both in regard to the intensity level and the frequency content. The minimum intensity is measured on the axis of the jet ($0^{\circ}$) and the angle of maximum intensity, depending on the exit flow conditions, may vary from $15^{\circ}$ or less to approximately $45^{\circ}$. The spectrums at azimuth angles near the jet axis generally have a relatively large low-frequency content; whereas, the higher-frequency components become relatively more intense at the larger azimuth angles.

6. The over-all sound pressures increase as a power function of the velocity. The exponent of the power varied from 2.1 to 3.7 for model jets with different turbulence levels and, for a turbojet engine, was approximately 3.0.

7. At a given velocity the over-all sound pressures vary directly as the density of the jet fluid.

8. An increase in the turbulence level of the jet fluid results in higher over-all noise levels. Highly turbulent air jets generate noise levels approximately 8 to 15 decibels higher than those of minimum turbulence.

9. The noise generated in the jet mixing region of a turbojet engine is very closely related to the noise generated by simple model jets and, for the high-thrust conditions of the engine, may be the main source of noise.

Langley Aeronautical Laboratory
National Advisory Committee for Aeronautics
Langley Field, Va., May 13, 1952

## REFERENCES

1. Eldredge, Donald H., Jr., and Parrack, Horace O.: Jet Engine Sound Spectra. AF TR No. 5827, ATI 57639, Air Materiel Command, U.S. Air Force, June 1949.

2. Wathen-Dunn, Weiant: Audible P-80 Jet Aircraft Noise. Naval Res. Lab. Rep. No. S-3266, March 26, 1948.

3. Anon.: Noise Measurements in an Aircraft in Flight. N.P.L. Rep. ref. GC.934, British A.R.C., Aug. 12, 1949.

4. Regier, Arthur A.: Effect of Distance on Airplane Noise. NACA TN 1353, 1947.

5. Ernsthausen, Wilhelm: Sound and Vibration in Aircraft. Vol. II of German Aviation Medicine World War II, ch. VII-A, Dept. of the [U.S.] Air Force, p. 662.

6. Corrsin, Stanley: Investigation of Flow in an Axially Symmetrical Heated Jet of Air. NACA ACR 3L23, 1943.

TABLE I

FLOW PARAMETERS FOR JET-NOISE TESTS

| Medium | $k = \frac{c_p}{c_v}$ | $\rho$ at 68° F, lb-sec$^2$/ft$^4$ | Gas constant, R | a at 68° F, fps | $P_o$, lb/sq in. abs | Exit conditions | | | | |
|---|---|---|---|---|---|---|---|---|---|---|
| | | | | | | $M_e$ | $T_e$, °F abs | $\rho_e$, lb-sec$^2$/ft$^4$ | $a_e$, fps | $V_e$, fps |
| Air | 1.40 | 0.00234 | 53.3 | 1126 | 27.2 | 0.90 | 434 | 0.00279 | 1030 | 928 |
| Helium | 1.66 | .00032 | 386.3 | 3320 | 27.2 | .90 | 403 | .00046 | 2910 | 2620 |
| Freon 12 | 1.13 | .01000 | 12.5 | 490 | 25.2 | .90 | 470 | .01130 | 462 | 415 |

NACA

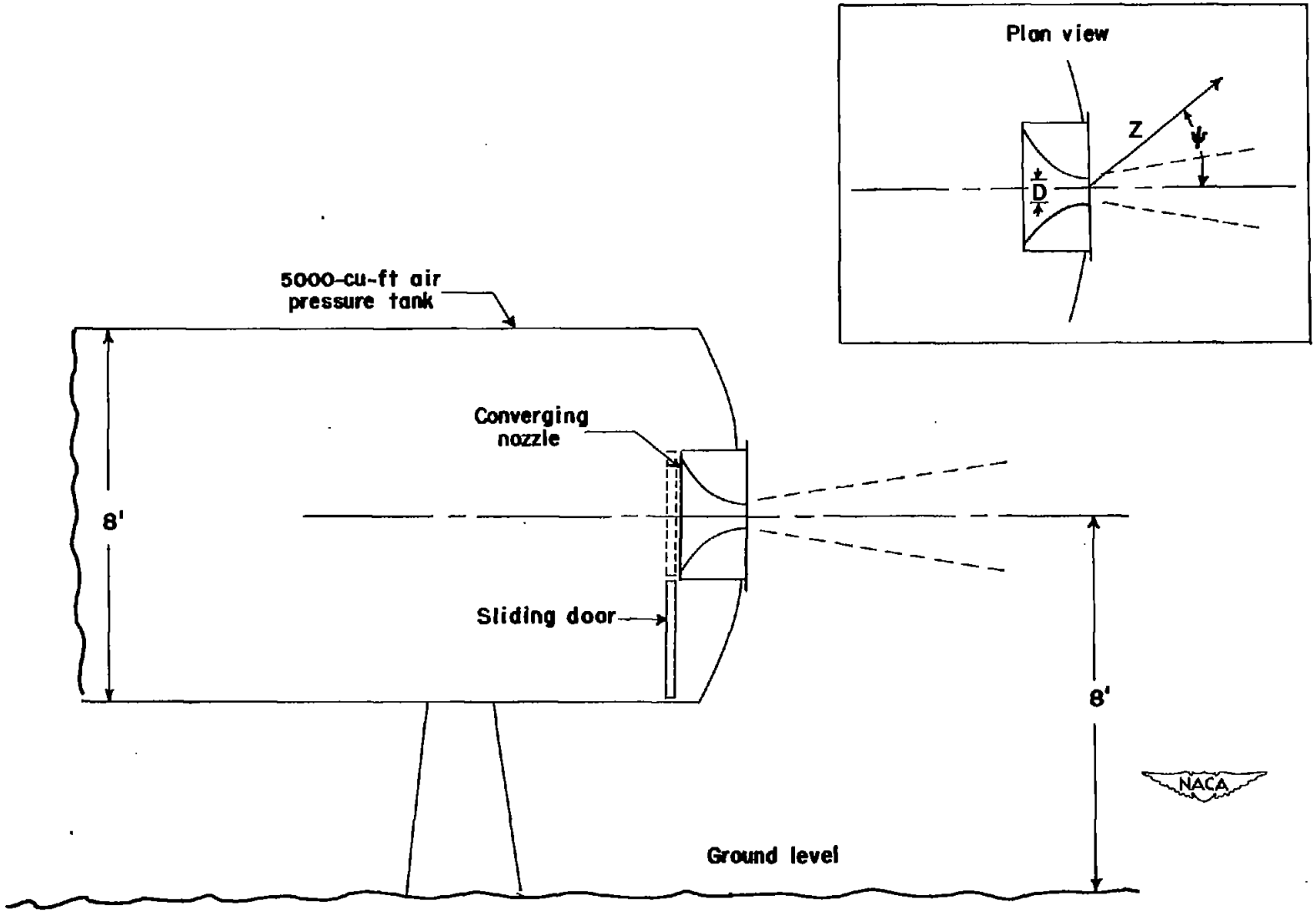


Figure 1.- Schematic diagram of equipment used in generation of air jets.

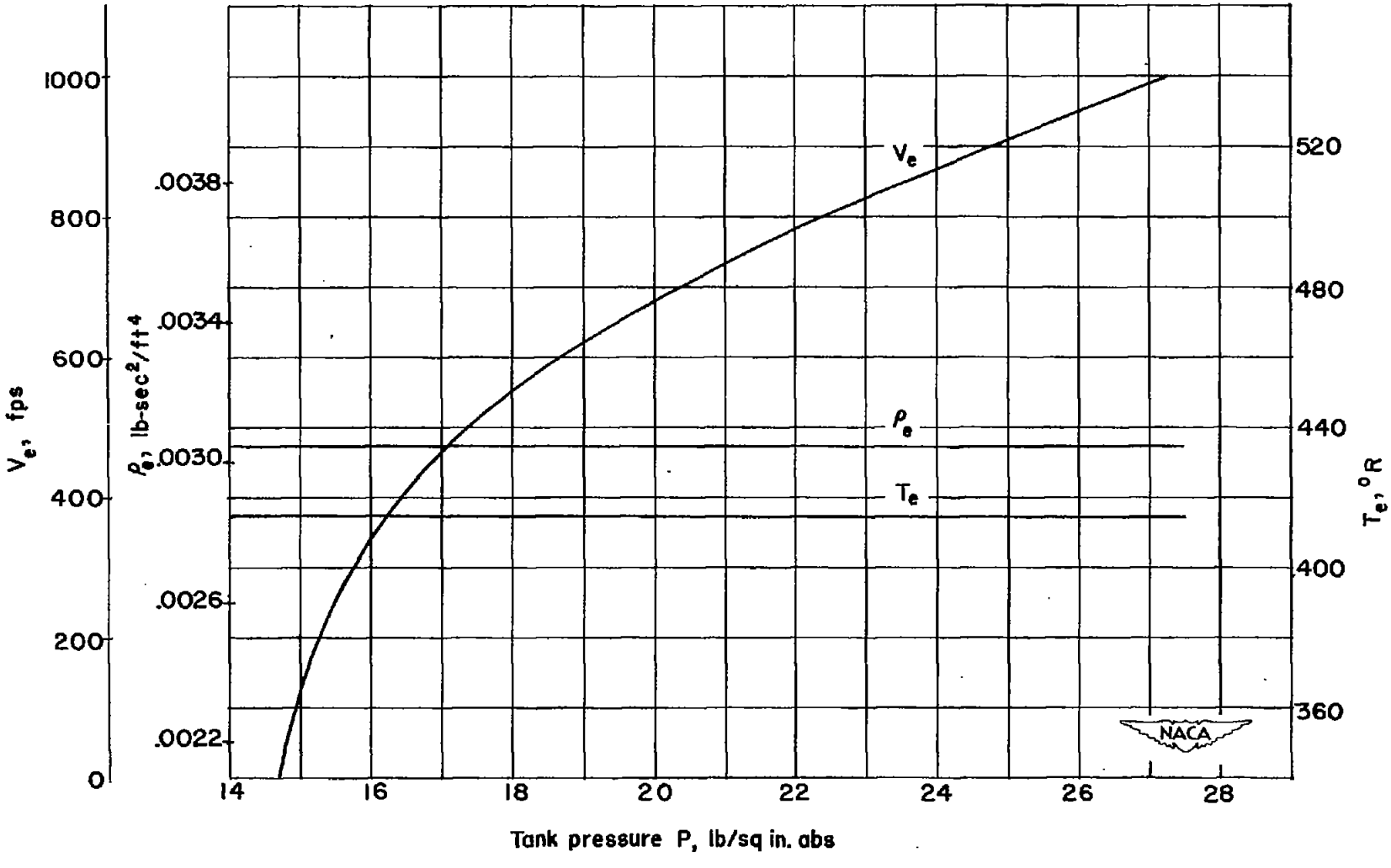


Figure 2.- Exit flow conditions as a function of absolute tank pressure for adiabatic expansion through a converging nozzle. $P_o$ = 35 pounds per square inch absolute; $T_o$ = 540° R.

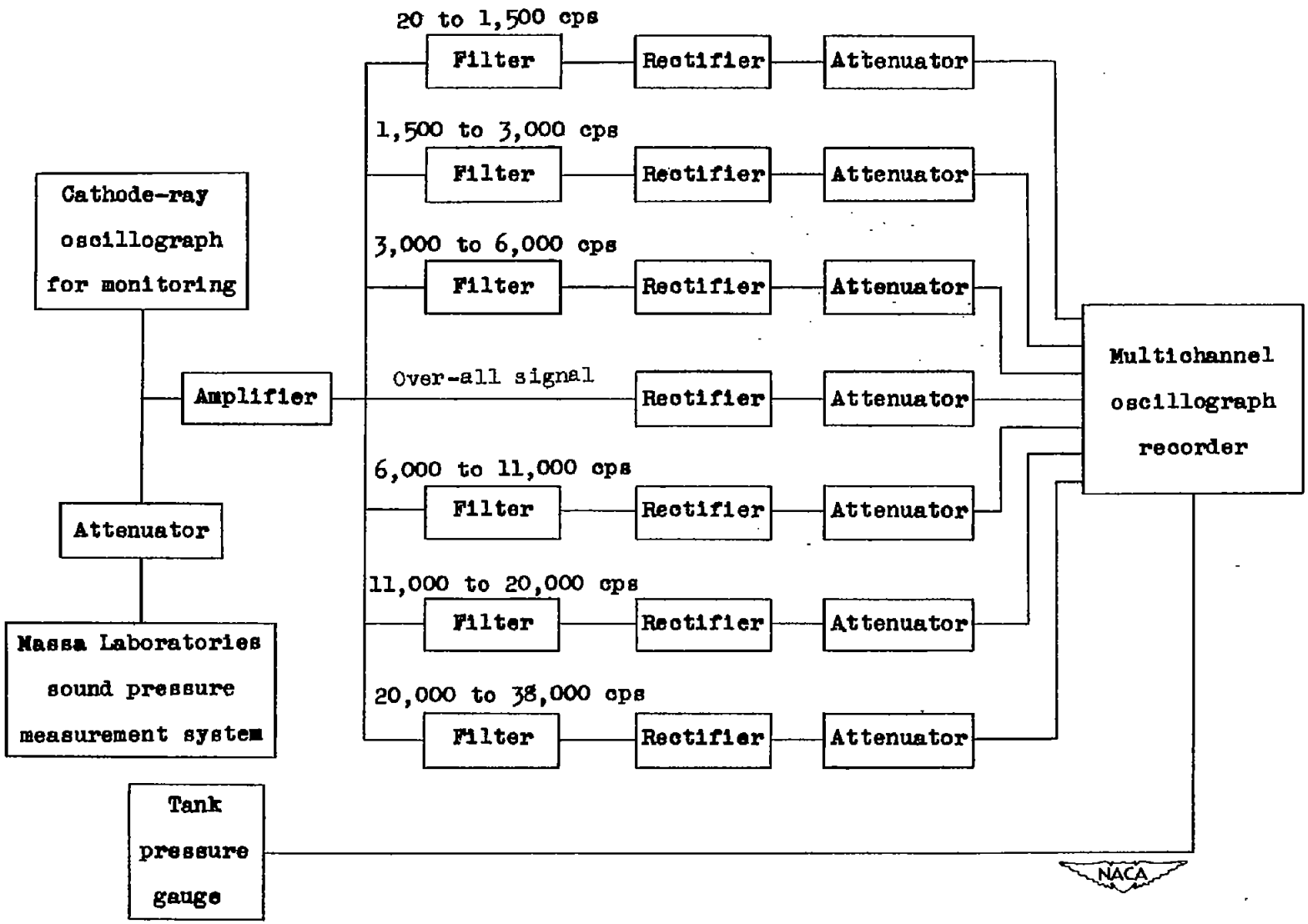


Figure 3.- Schematic diagram of the instrumentation used in jet-noise tests.

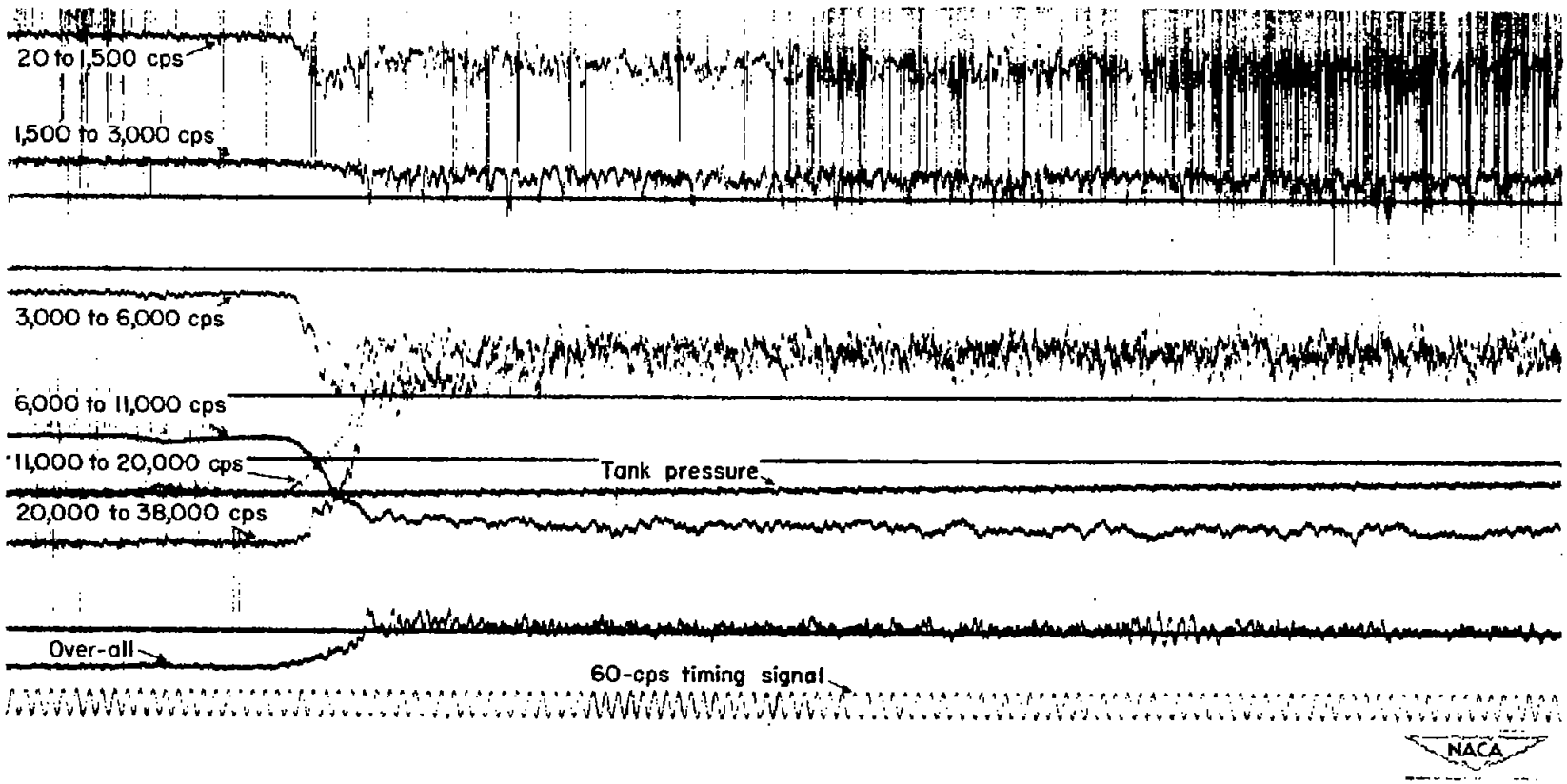


Figure 4.- Typical multichannel oscillograph record of jet-noise data obtained by instrumentation of figure 3. (Time increases from left to right.)

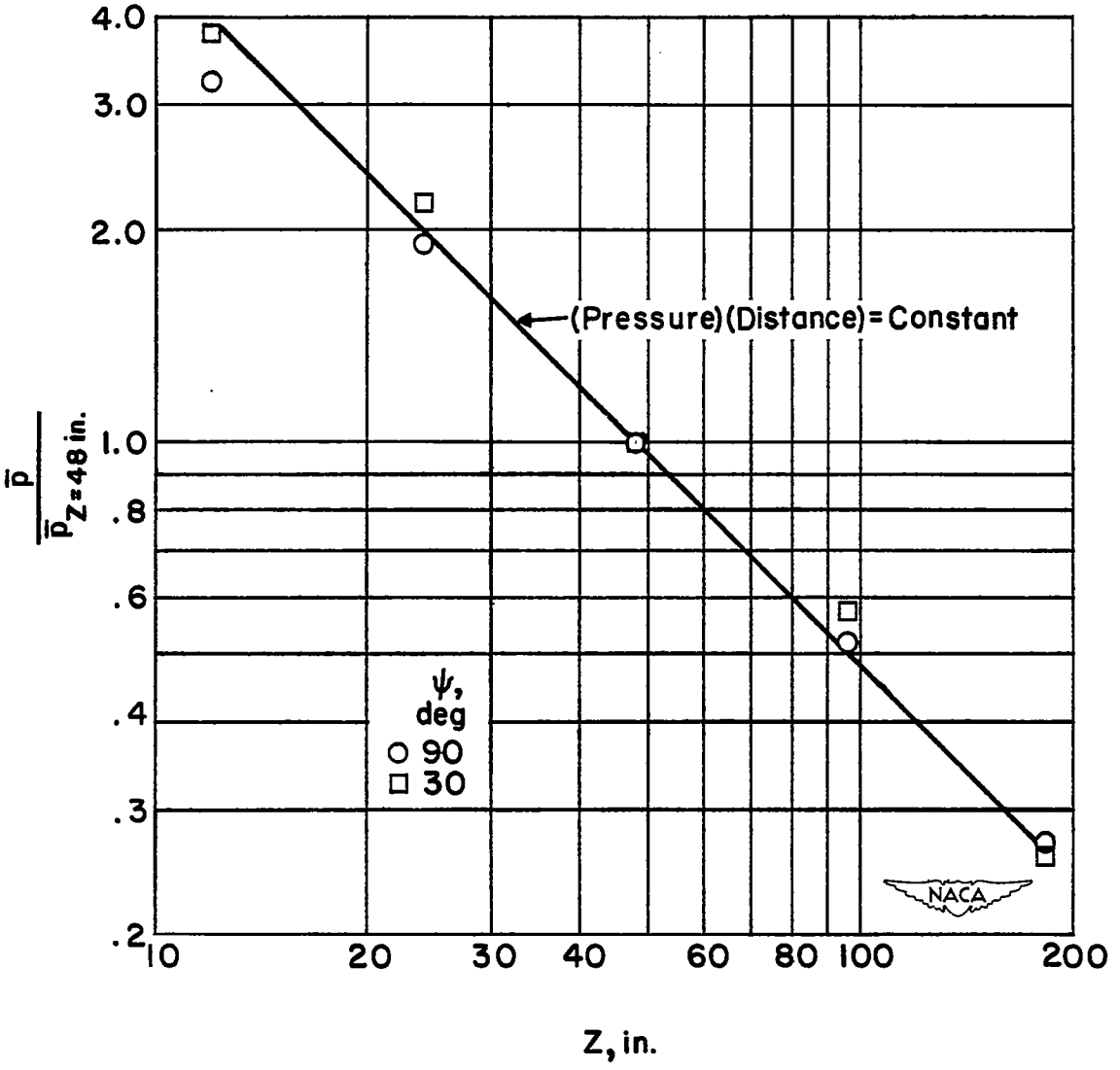


Figure 5.- Effect of distance on over-all sound pressure from air jets. V = 1000 feet per second.

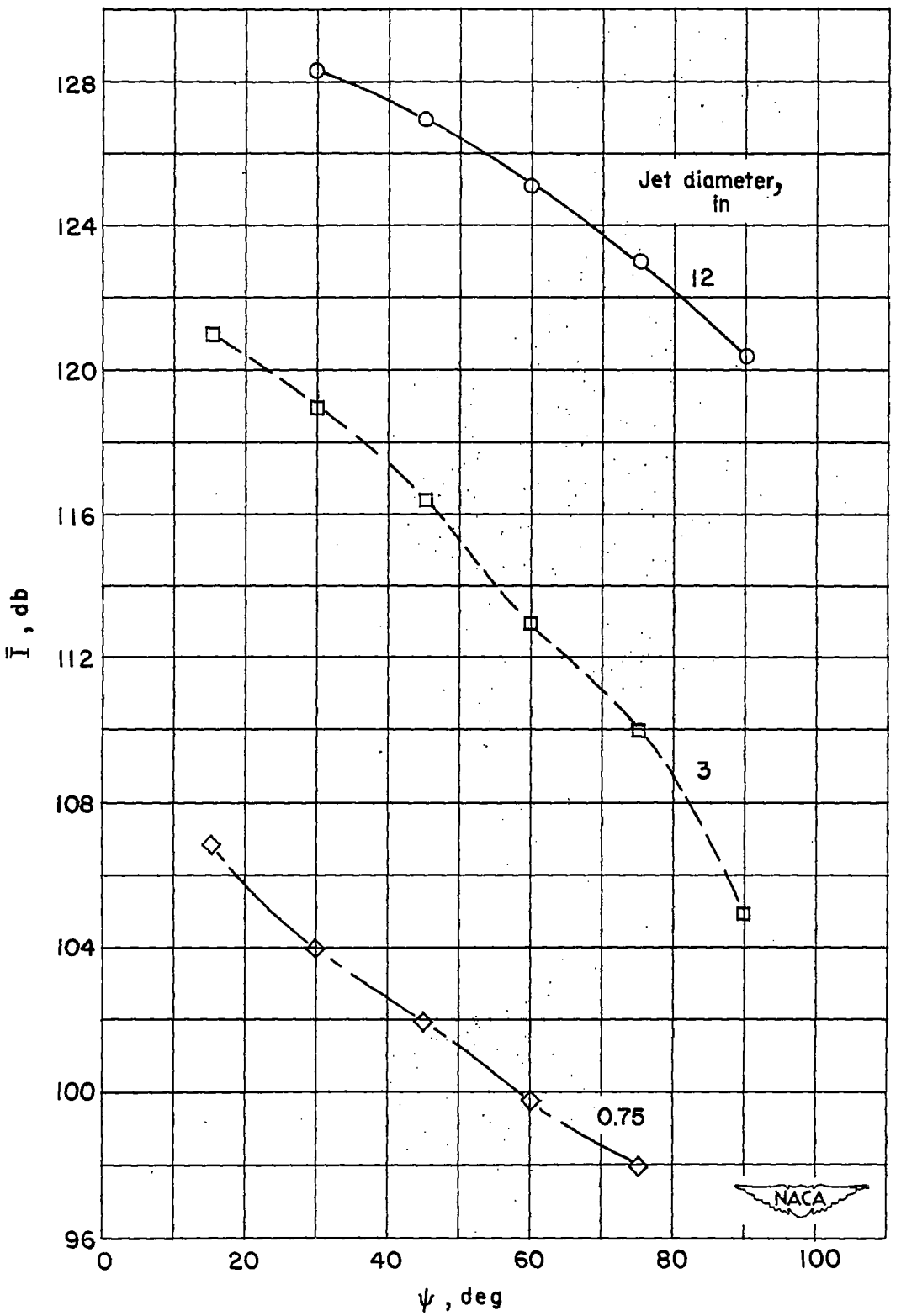


Figure 6.- Over-all sound pressure level as a function of azimuth angle for three sizes of air jets. Z = 48 inches; $V_e$ = 1000 feet per second.

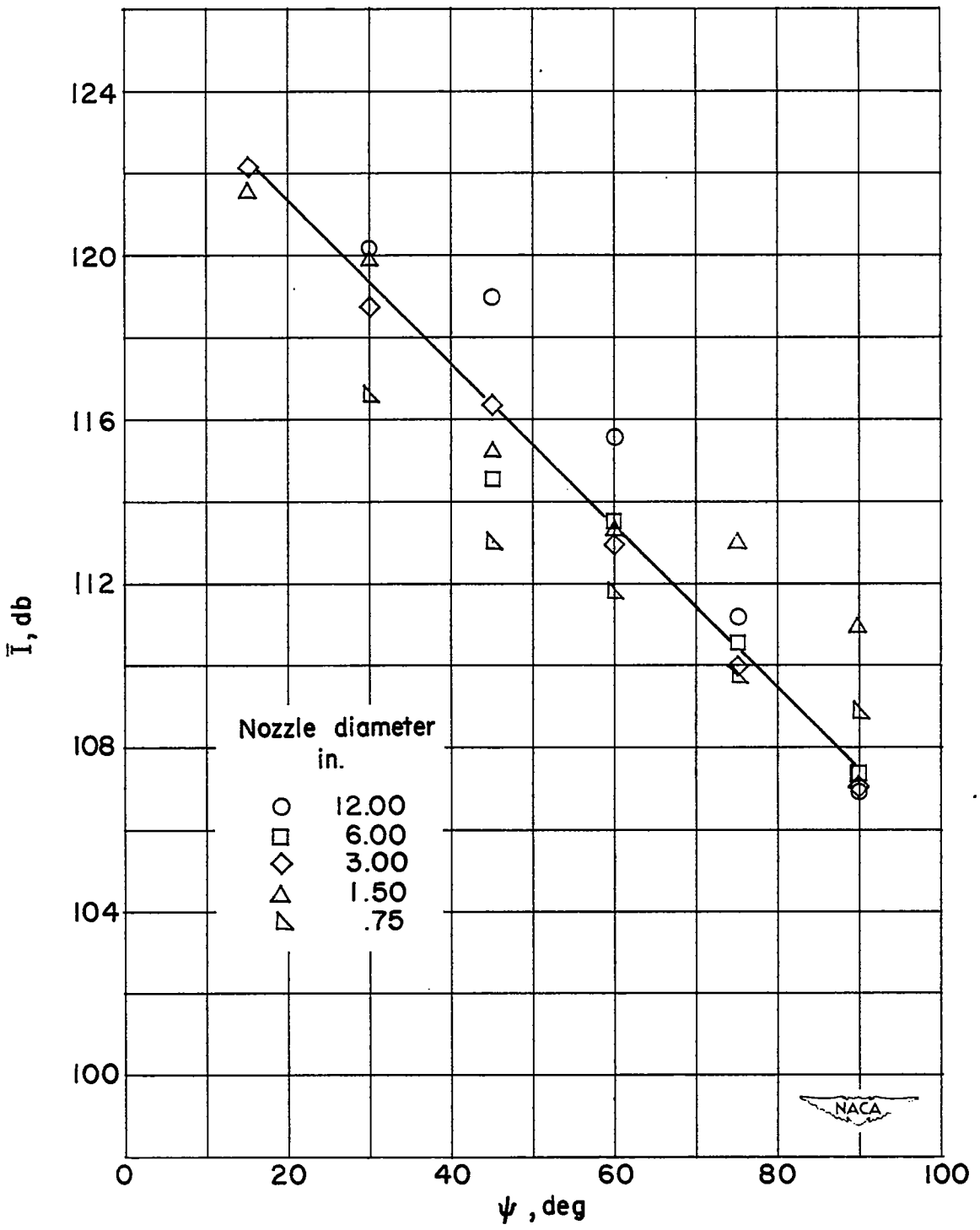


Figure 7.- Effect of azimuth angle and jet size on the over-all sound pressure generated by air jets. $V_e$ = 1000 feet per second; $\frac{Z}{D}$ = 16.

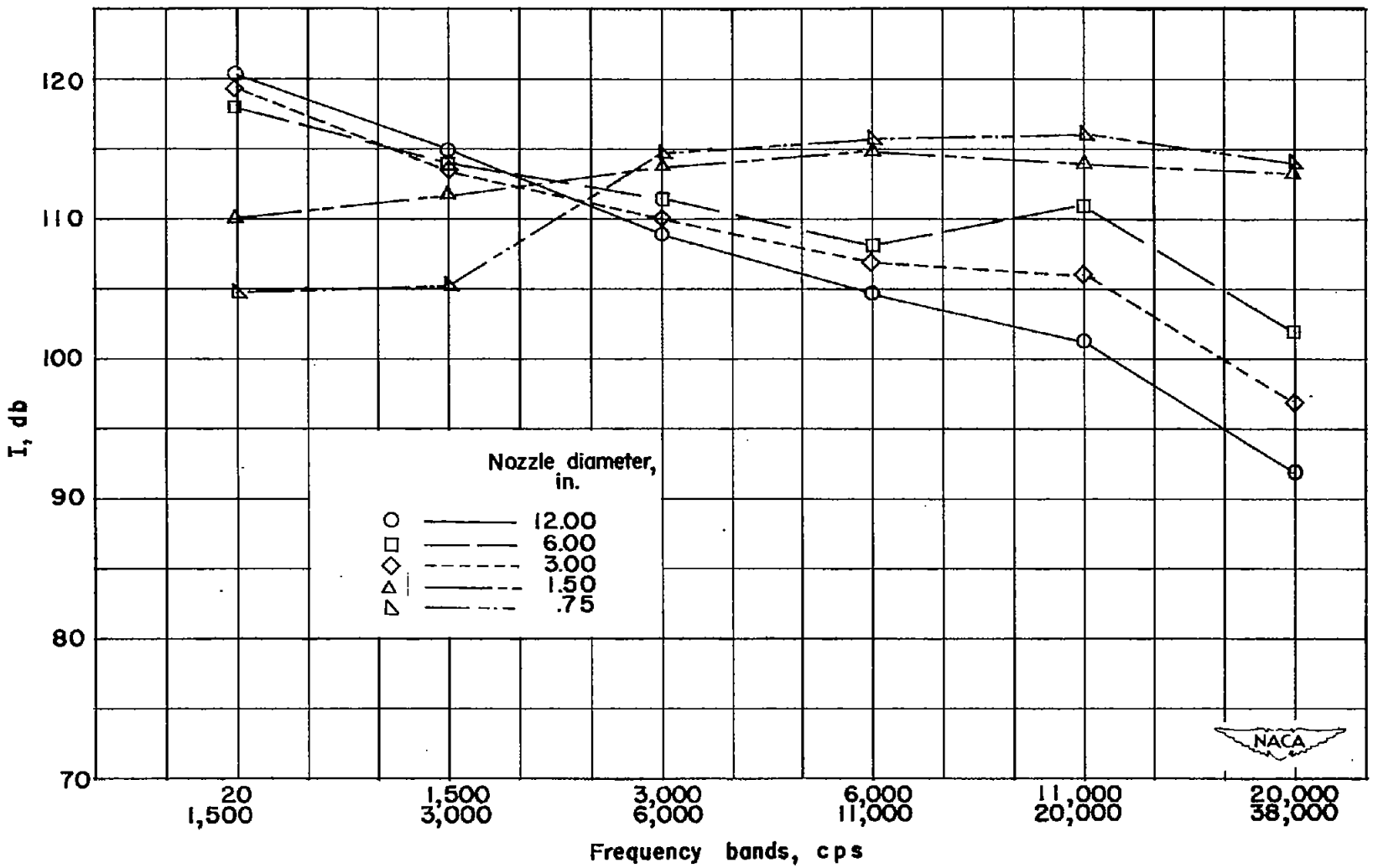


Figure 8.- Effect of nozzle size on air-jet noise spectrums. $\psi = 30^{\circ}$; $\frac{Z}{D} = 16$; $V_e = 1000$ feet per second.

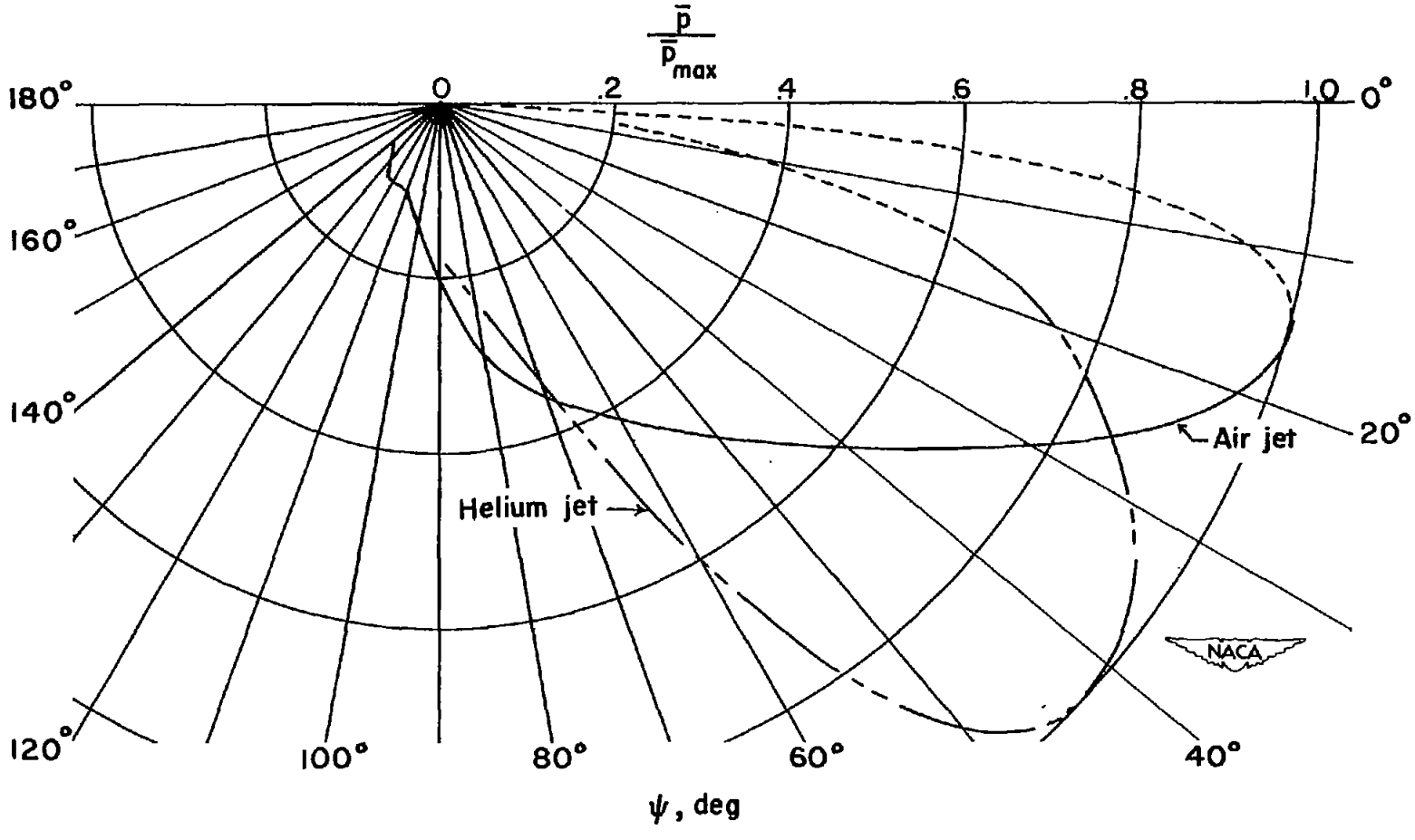


Figure 9.- Relative over-all sound pressure as a function of azimuth angle for model jets.

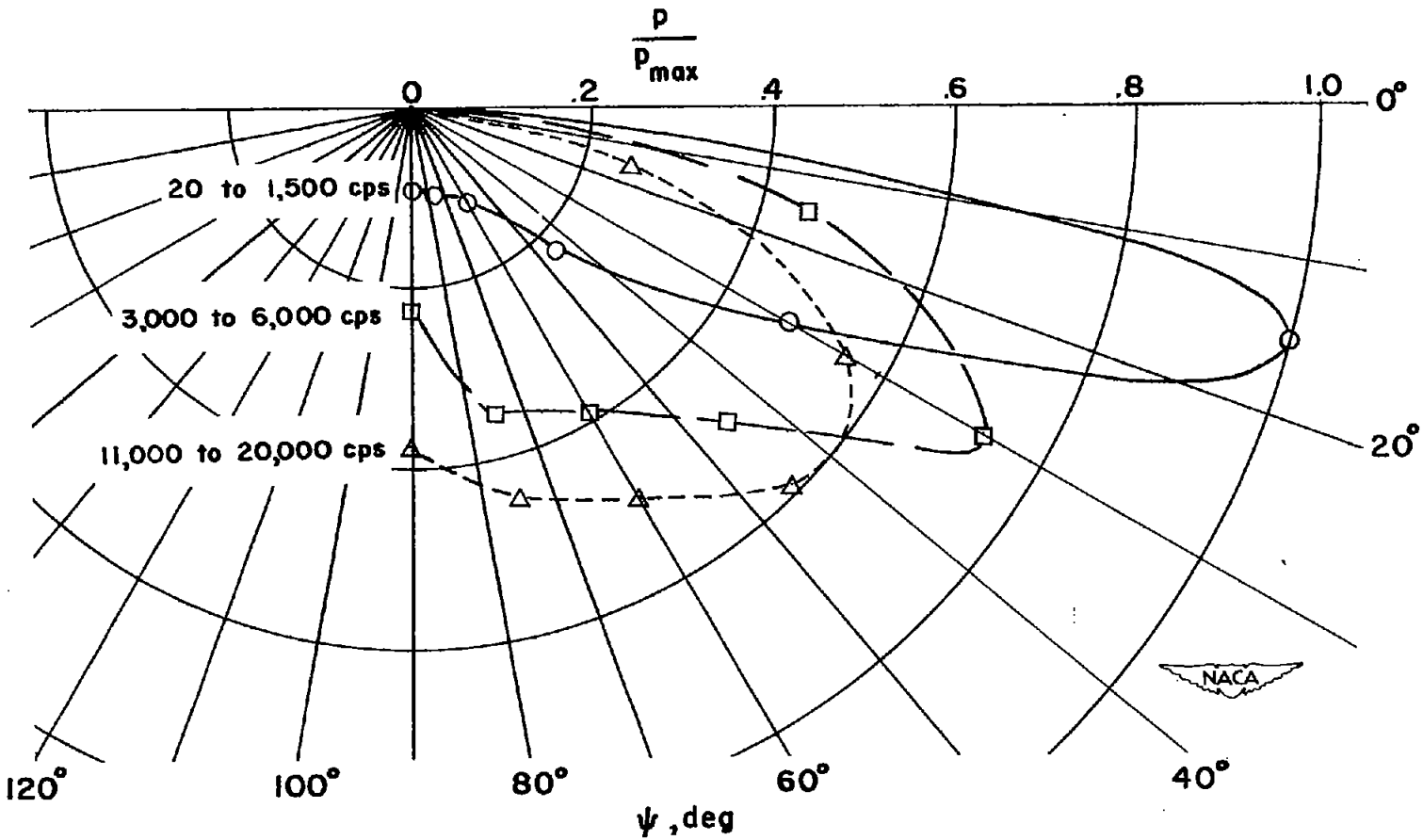


Figure 10.- Polar distribution of various frequency bands of noise generated by a 1.5-inch-diameter air jet. $V_e$ = 900 feet per second.

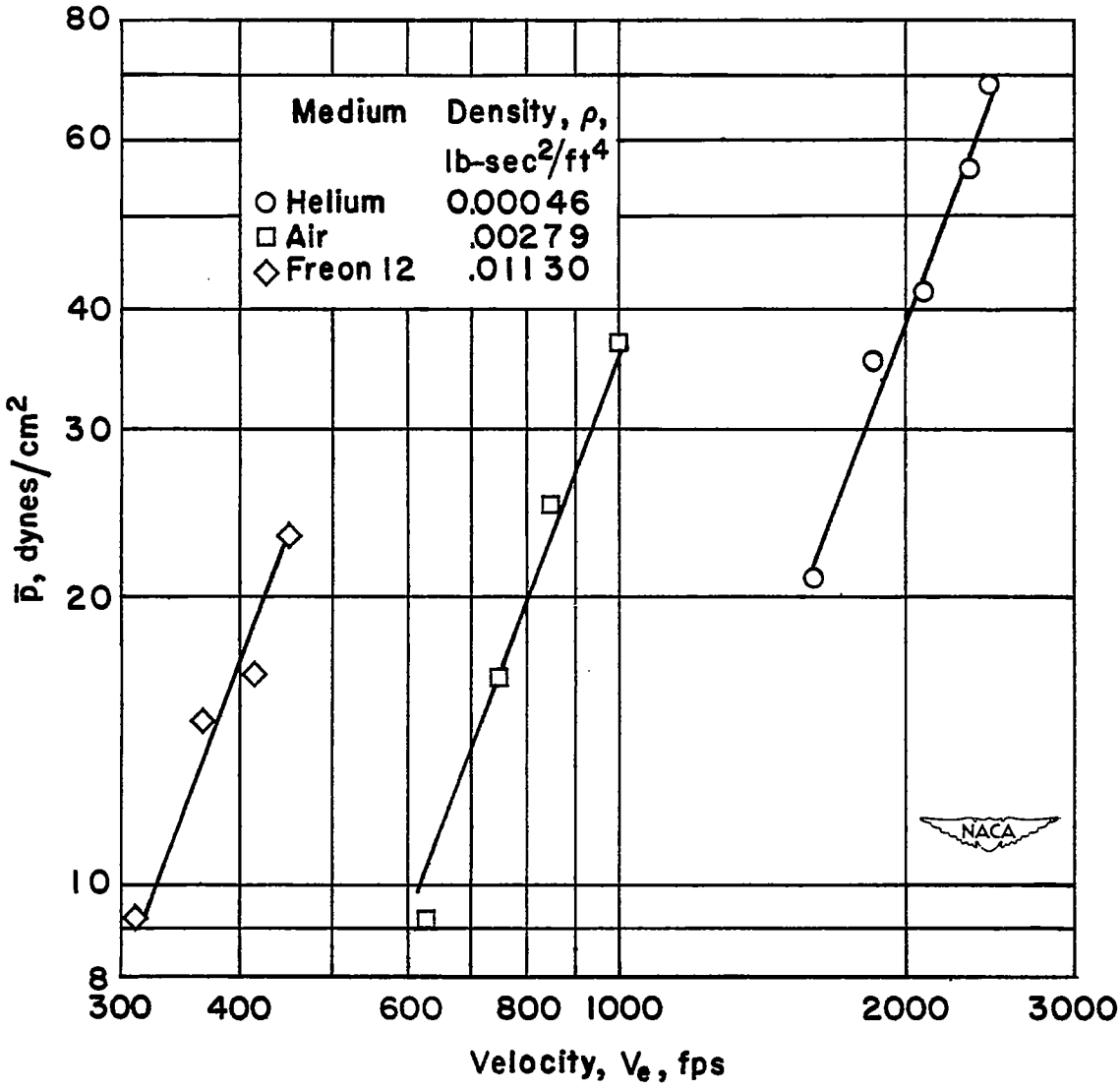


Figure 11.- Over-all sound pressure as a function of jet exit velocity for three jet mediums. $\psi = 90^{\circ}$; $\frac{Z}{D} = 16$; D = 0.75 inch.

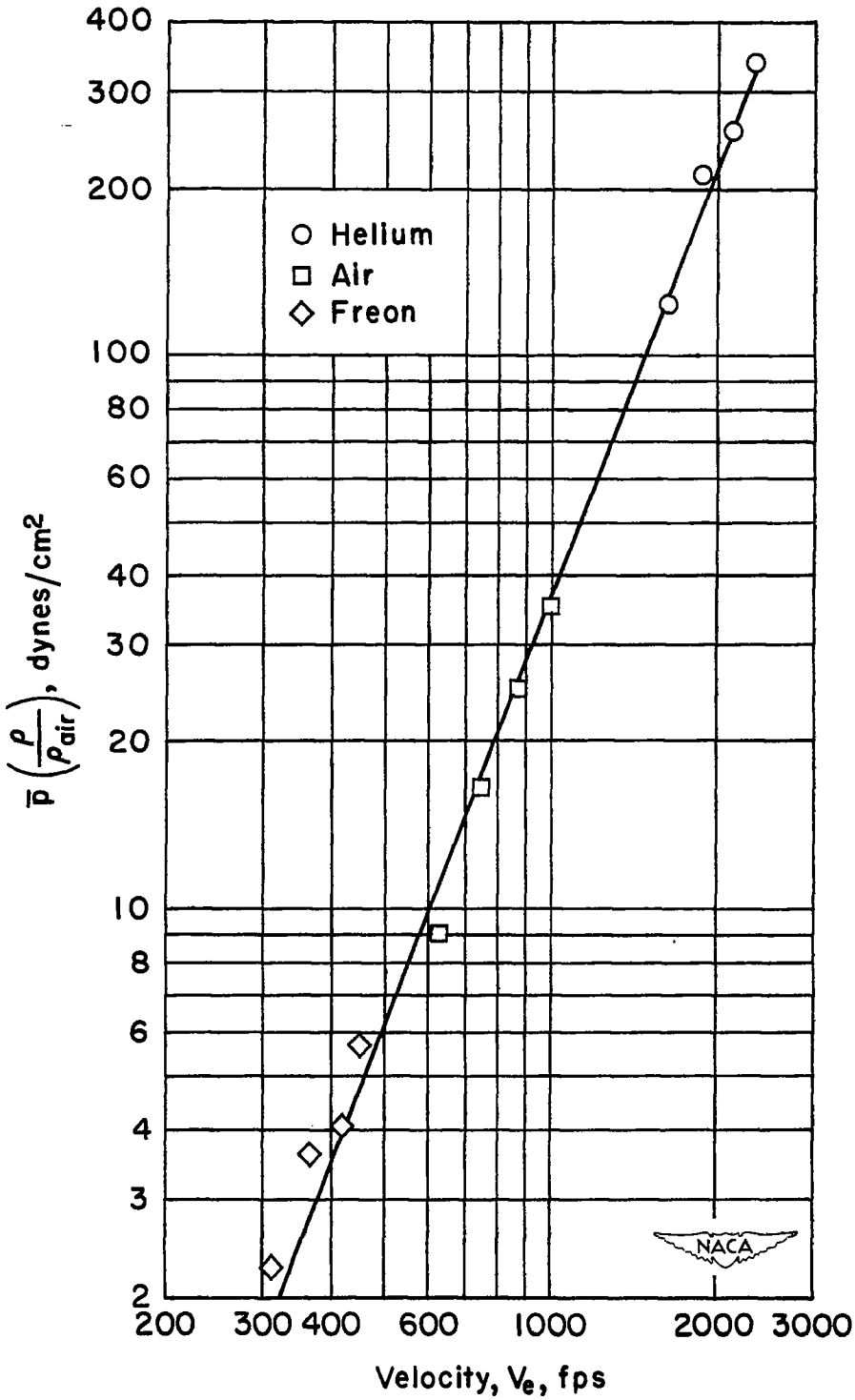


Figure 12.- Over-all sound pressure as a function of jet exit velocity after normalization of Freon and helium data to air density. $\psi = 90^{\circ}$; $D = 0.75$ inch; $\frac{Z}{D} = 16$; $\rho_e = 0.00279$ pound-seconds$^2$/feet$^4$.

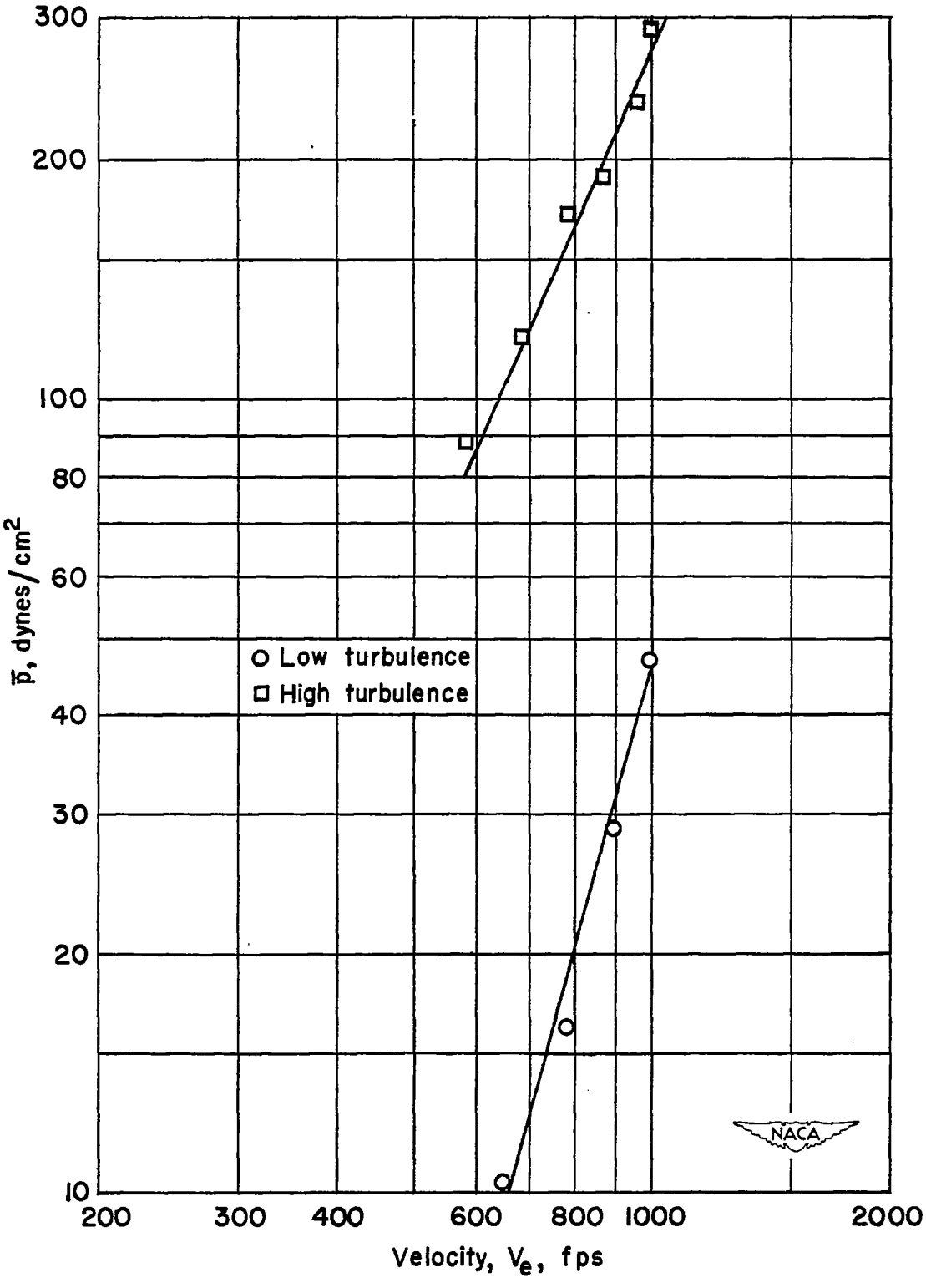


Figure 13.- Effect of exit velocity on the over-all sound pressures generated by subsonic air jets. $\psi = 90^{\circ}$; D = 3 inches; $\frac{Z}{D} = 16$.

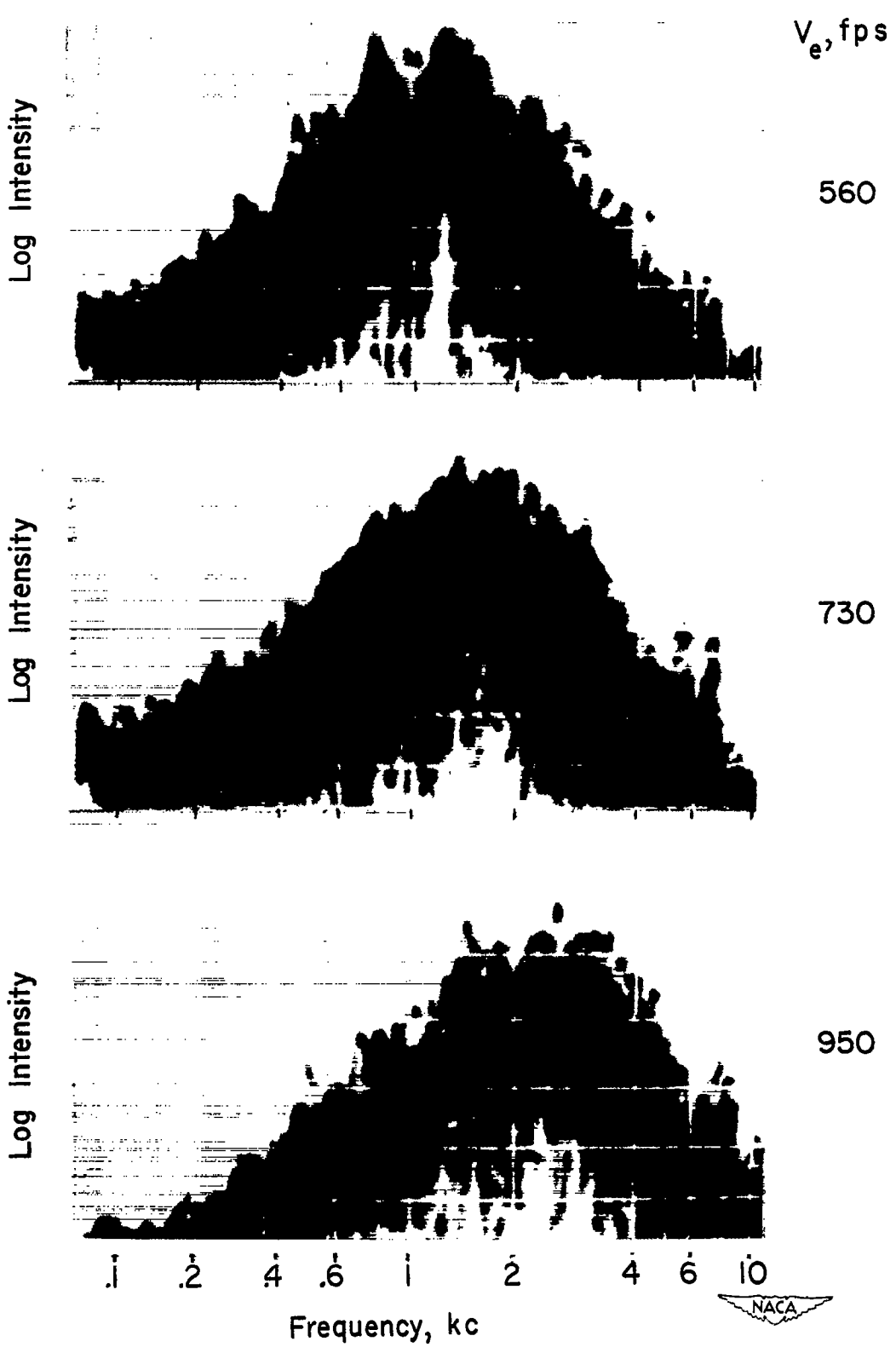


Figure 14.- Effect of exit velocity on noise spectrums of a model air jet. D = 3 inches; Z = 4.6 inches; $\psi = 40^{\circ}$.

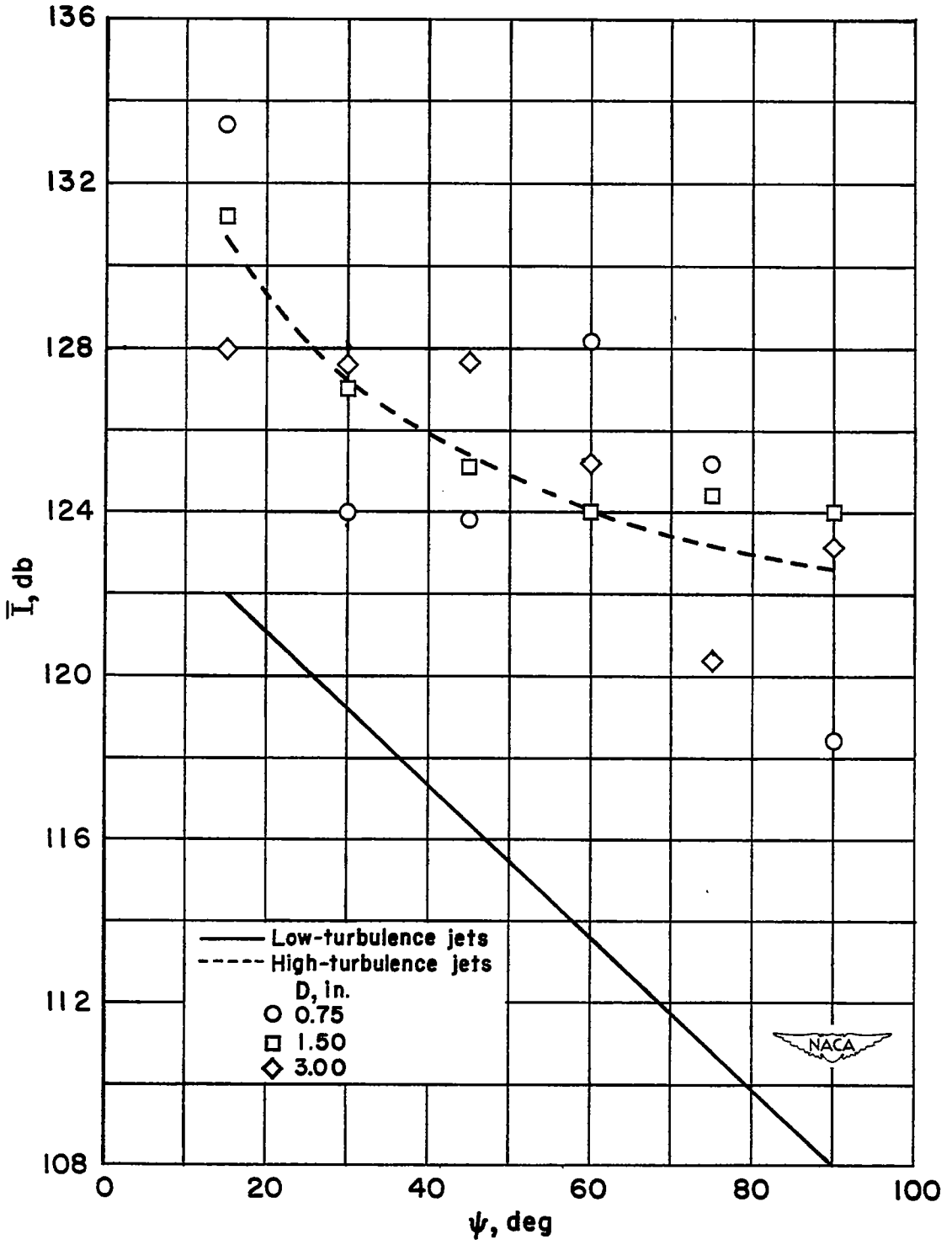


Figure 15.- Comparison of over-all sound pressure distribution in low-turbulence and high-turbulence subsonic air jets. $\frac{Z}{D} = 16$; $V_e = 1000$ feet per second.

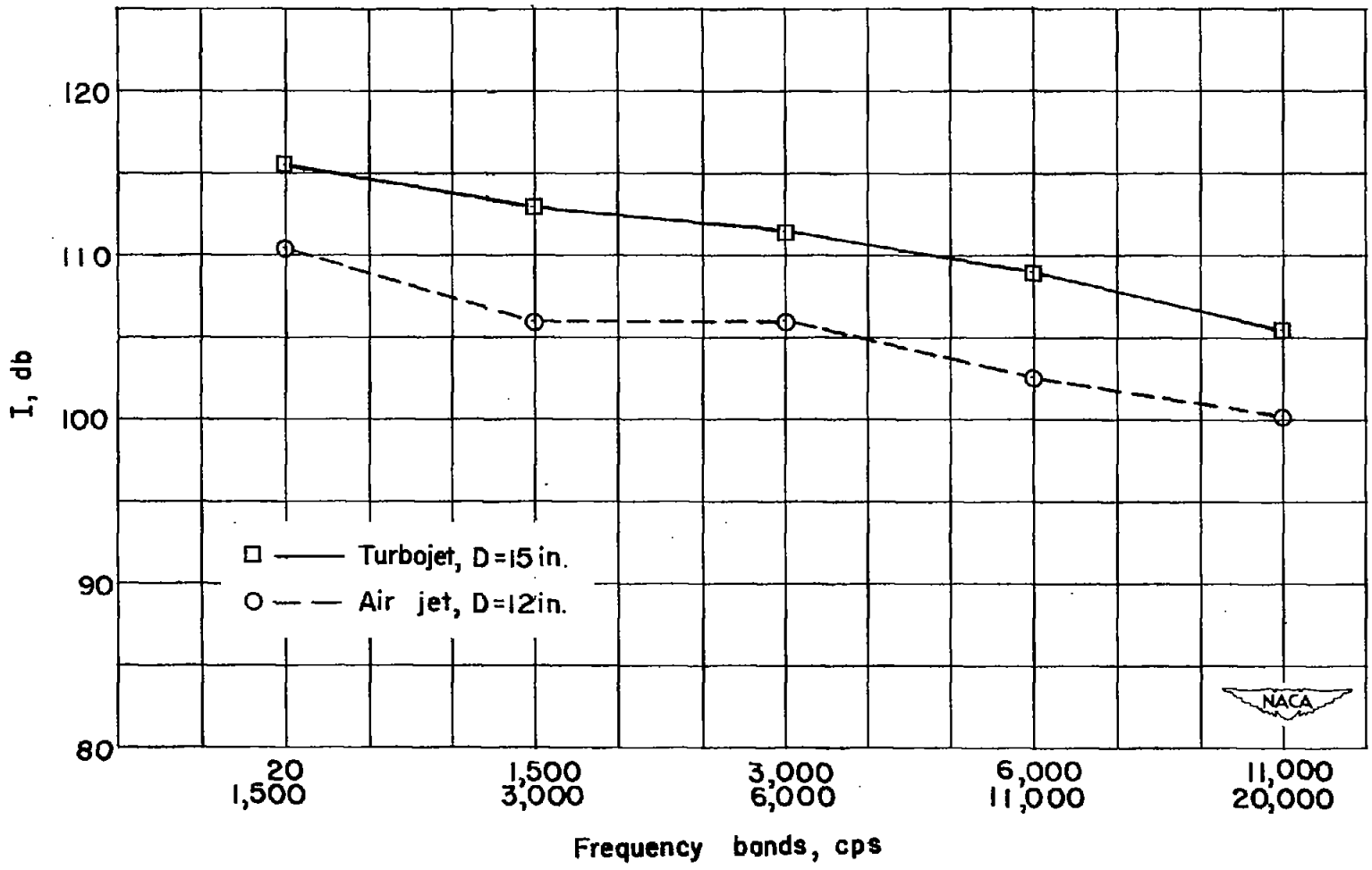


Figure 16.- Comparison of model-jet and turbojet frequency spectrums. $\frac{Z}{D} = 16$; $\psi = 90^{\circ}$; $\rho_e = 0.00086$ pound-seconds$^2$/feet$^4$; $V_e = 1625$ feet per second.

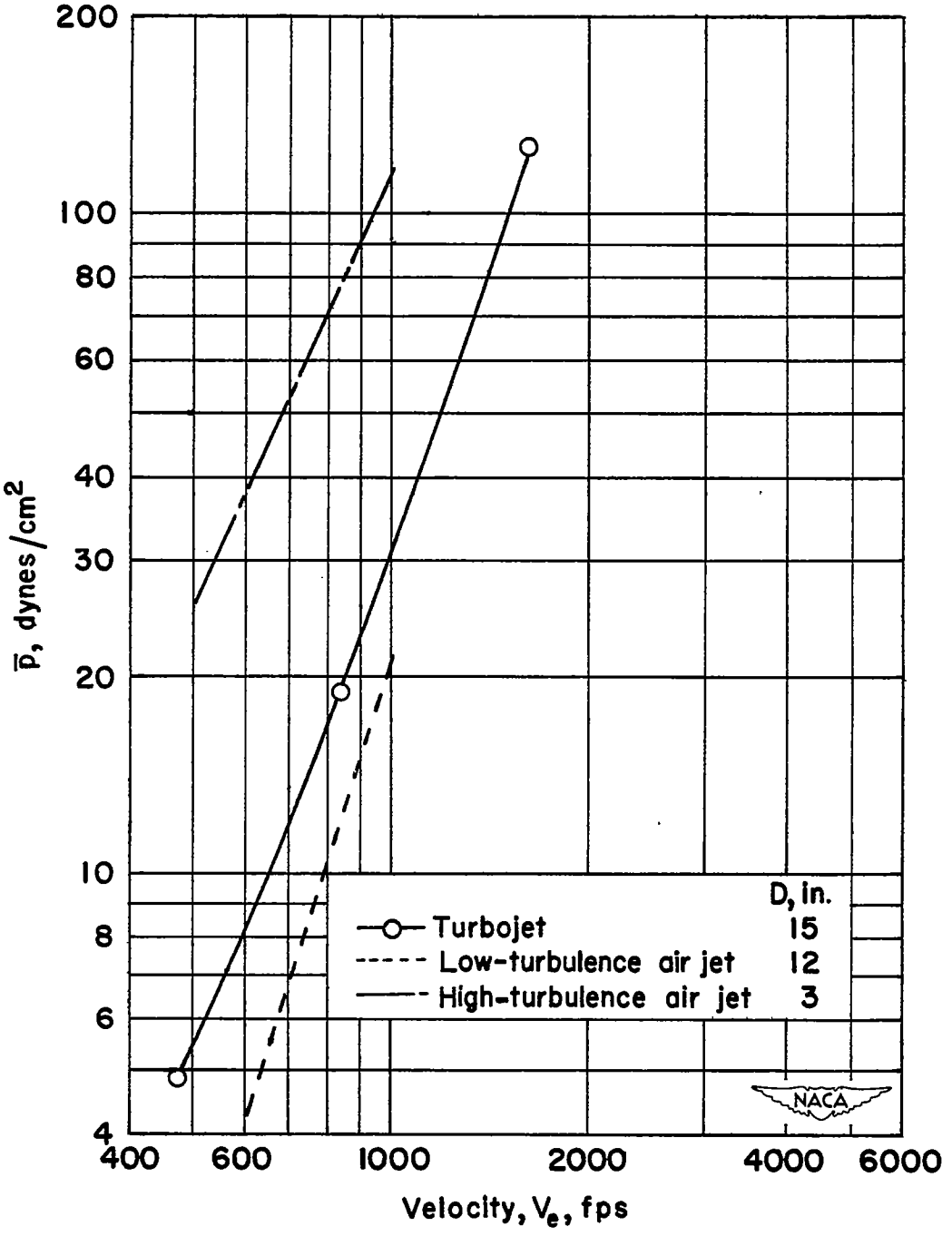


Figure 17.- Effect of exit velocity on over-all sound pressures from turbojet and model air jets. $\psi = 90^\circ$; $\frac{Z}{D} = 16$; $\rho_e = 0.00086$ pound-seconds$^2$/feet$^4$.

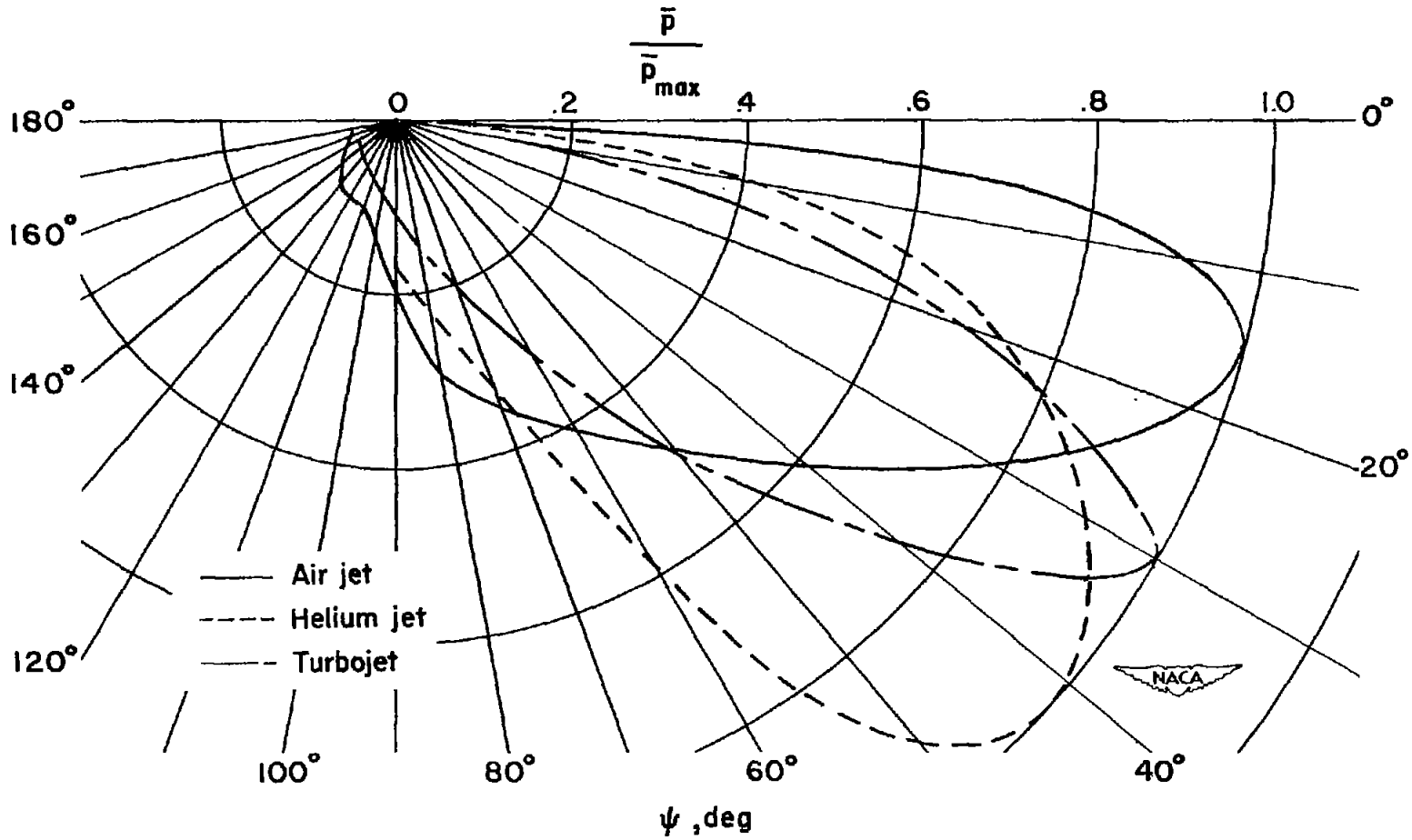


Figure 18.- Comparison of over-all sound pressure distributions for turbojet and model jets.

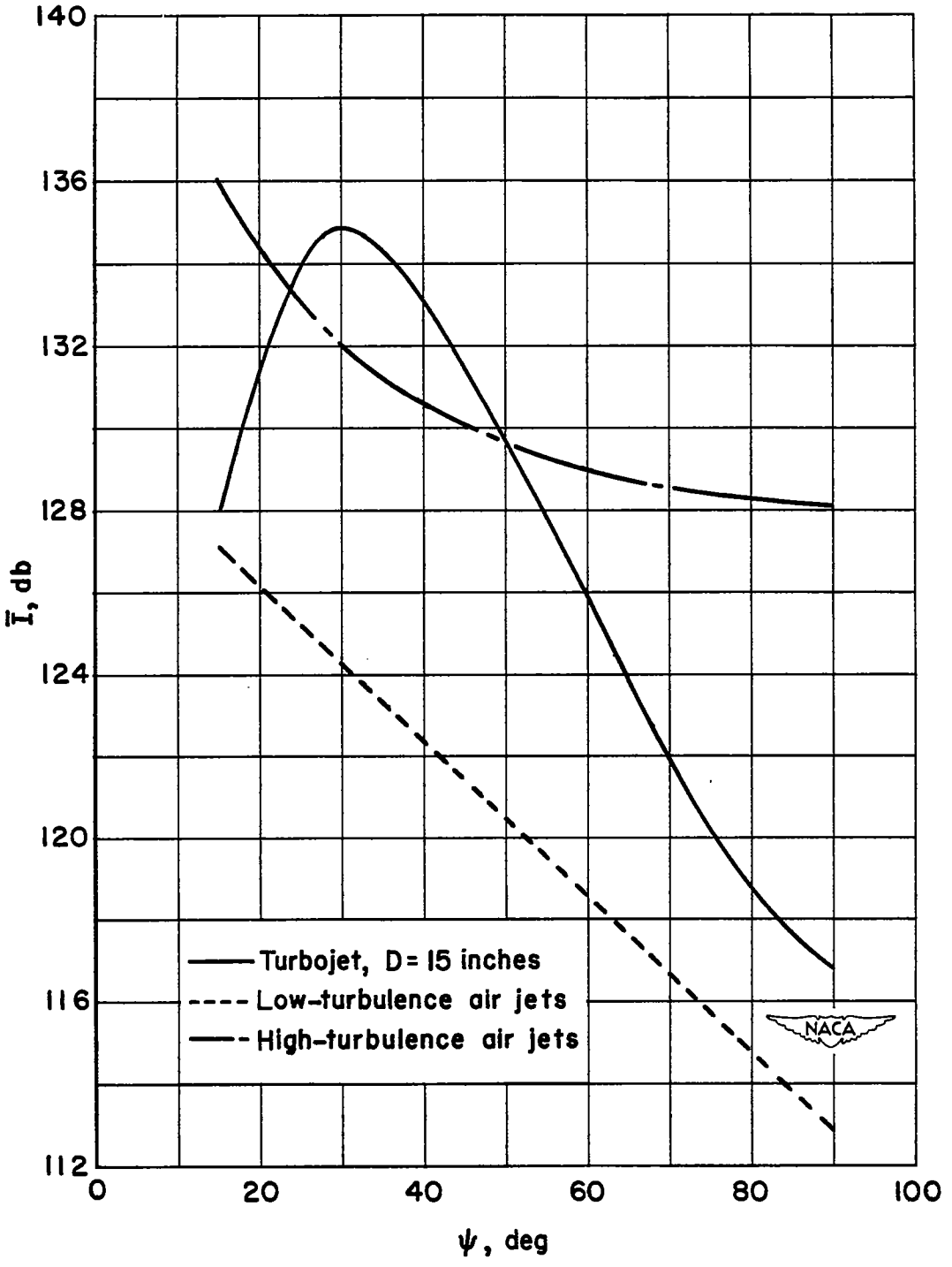


Figure 19.- Comparison of measured turbojet intensity levels with low-turbulence air-jet intensity levels extrapolated to turbojet flow conditions. V = 1625 feet per second; $\frac{Z}{D} = 16$; $\rho_e = 0.00086$ pound-seconds$^2$/feet$^4$.