9142
NACA TN 2785

TECH LIBRARY KAFB, NM
0065924

NATIONAL ADVISORY COMMITTEE FOR AERONAUTICS

TECHNICAL NOTE 2785

INTRODUCTION TO ELECTRICAL-CIRCUIT ANALOGIES FOR BEAM ANALYSIS

By Stanley U. Benscoter and Richard H. MacNeal

California Institute of Technology

Washington
September 1952

TECHNICAL LIBRARY
AFL 2811

TECH LIBRARY KAFB, NM

0065924

NATIONAL ADVISORY COMMITTEE FOR AERONAUTICS

TECHNICAL NOTE 2785

INTRODUCTION TO ELECTRICAL-CIRCUIT ANALOGIES FOR BEAM ANALYSIS

By Stanley U. Benscoter and Richard H. MacNeal

SUMMARY

An application is described of the well-known analogy between electrical and mechanical systems to the calculation of stresses and deflections of beams. The object of the present paper is to give an explanation of the analogies in an elementary manner which will enable a structural engineer to understand the process of designing the electrical circuits. The analogies which are discussed are those that are now being used in the Cal-Tech analog computer. Analogies are given for beams in bending and torsion with static loads and in vibrational motion.

INTRODUCTION

In recent years a considerable amount of progress has been made in the development of applications of electrical-circuit analogies to problems in structural analysis. Many solutions of such problems have been obtained on the Cal-Tech analog computer. A number of papers have also been written in which the electrical analogies for various problems have been presented. These papers have been written mainly by electrical engineers and have assumed the reader to be reasonably familiar with circuit theory. Consequently structural engineers have found some difficulty in appreciating and evaluating this new method of analysis. In the present paper the design of the electrical circuits will be explained in complete detail without assuming any knowledge of circuit theory on the part of the reader. It is hoped that this paper will assist structural engineers in reaching a better understanding of the practical utility of electrical analogies in structural analysis.

In order to develop an electrical analogy for the action of a beam under load it is necessary to replace the differential equations which govern the stresses and deflections by difference equations. The relations between voltages and currents in an electrical circuit may also be expressed by difference equations. An analogous electrical circuit for a beam is one in which the voltages and currents are related by difference equations which have a form identical to that of the structural equations,

including the boundary conditions. When such a circuit is designed and constructed the physical circuit, with its components, is called an analog computer. It might also be called an electrical simulator or even an electrical model.

This paper was prepared at the California Institute of Technology under the sponsorship and with the financial assistance of the National Advisory Committee for Aeronautics.

SYMBOLS

A	shear-resistant area
C	capacity of a condenser
E	Young's modulus; also voltage with respect to ground
G	shearing modulus of elasticity
I	moment of inertia of cross section of a beam; also current
I_β	rotary inertia of a segment of a beam
I_ϕ	moment of inertia of mass about axis of beam
i	current
J	torsion constant
j	station number along a rib; also number of a nodal point
k	station number along a beam; also number of a nodal point
L	inductance of an induction coil
M	bending moment
m	mass; also bay number along a rib and number of a nodal point when used as a subscript
n	bay number along a beam; also number of a nodal point
P	concentrated vertical load
Q	concentrated torque load

R	resistance
r	turns ratio of a transformer
T	section torque
t	time
V	section shear
V_{sn}	vertical component of internal forces in nth bay
V_{in}	indeterminate part of section shear
w	vertical deflection
x	spanwise coordinate
β	angle of rotation of a normal to elastic axis
γ	shearing strain
Δ_k,Δ_n	differencing operators
θ	slope of elastic axis
λ	bay length
μ	Poisson's ratio
ϕ	rotation (angle of twist)
$'$	quantities in upper coil

GENERAL DESIGN PRINCIPLES

From a mathematical viewpoint the theory of circuit analogies has not been fully developed. Questions of existence and uniqueness remain yet to be answered. From an engineering standpoint the procedure for designing a circuit which is analogous to a given structure is at present dependent to some extent upon the ingenuity of the designer. It would be

desirable to have available a set of rules defining a standardized design procedure which could always be depended upon to give a correct analogous circuit for any given differential equation. However, no such rules have as yet been developed.

Several principles have been found to be useful in a large number of circuit designs and these will be stated briefly. Exact limitations upon the usefulness of the principles are not known. The first principle is that the equations governing the action of the structure must be expressed as difference equations with respect to the space coordinates. If the stresses or deflections are governed by differential equations these equations must be replaced by difference equations.

The two quantities which are available in an electrical circuit are voltages and currents. The two types of quantities which occur in structural analysis are force quantities and displacement quantities. Two general methods can be used in designing analogous circuits. In one method the voltage drops across various elements of the circuit correspond to forces and the currents in the elements of the circuit correspond to displacement quantities. In the second method the voltages at nodal points correspond to displacement quantities and the currents correspond to force quantities. The second method will be used in all analogies throughout this paper since this type of analogy has been found to be more efficient on the Cal-Tech analog computer for beam and plate analogies. The types of circuits to be considered are those containing only passive elements. The elements which will be used are inductors, resistors, capacitors, and transformers. (Amplifiers are not required in the analogies described herein.)

Another simple principle can now be stated for circuits with passive elements. In many cases it is possible to determine the correspondence between currents and force quantities after the correspondence between voltages and displacements has been assumed. Whenever the voltages at either end of a circuit element both represent the same type of displacement quantity, the product of current by the drop in voltage across the element must correspond to a true structural energy quantity (or derivative or integral with respect to time of a structural energy quantity). The structural energy quantity may be either internal strain energy or external work.

In the equations which govern the structure there are three types of relations involved. Forces are related to forces from equilibrium conditions. Forces are related to displacements from an application of Hooke's law. Displacements are related to displacements from geometric conditions of continuity. The equations of the electrical circuits involve three corresponding types of relations. Currents are related to currents from Kirchhoff's nodal law which states that the outflow of

current at a node must equal the inflow. Currents are related to voltages from Ohm's law for a resistor and similar laws for an inductor or a capacitor. Voltages are related to voltages, in the analogies herein described, by means of the transformer law. (The voltage relations given by Kirchhoff's mesh law are not employed.) The correspondence between these structural and electrical relationships may be illustrated as given in table 1.

A final principle may be stated in relation to the coefficients of the equations which govern the electrical circuit. For maximum simplicity in the process of solution it is necessary to design the circuit in such a way that the equations governing the circuit have coefficients which are independent of the frequency.

EQUATIONS GOVERNING ELECTRICAL CIRCUIT ELEMENTS

The equations governing currents and voltages in individual circuit elements will be stated in complete detail. These equations will be expressed in the form of first-order difference equations. The first equation to be considered will be an expression of Kirchhoff's law for a node. Currents at the kth node of a circuit are shown in figure 1(a). The current in the nth element of the main line is indicated as i_n. The current being forced into the line by a generator at the kth node is I_k. Kirchhoff's law gives

$$i_n - i_{n-1} - I_k = 0 \tag{1}$$

A differencing operator Δ_k will be introduced and defined as the jump in a function across the kth node. When this operator is applied to the current i_n the result is

$$\Delta_k i_n = i_n - i_{n-1} \tag{2}$$

Substituting equation (2) into equation (1) gives

$$\Delta_k i_n = I_k \tag{3}$$

The next equation to be considered is an expression of Ohm's law for a resistor as shown in figure 1(b). This resistor, which has a resistance R_n, is the nth element connecting two nodal points in a circuit. The current in the element is related to the voltages at the nodes by the equation

$$R_n i_n = E_k - E_{k+1} \tag{4}$$

A second differencing operator Δ_n will be introduced and defined as the jump, or increase, in a function across the nth element. Applying this operator to the voltage gives

$$\Delta_n E_k = E_{k+1} - E_k \tag{5}$$

Substituting equation (5) into equation (4) gives

$$\Delta_n E_k = -R_n i_n \tag{6}$$

Similar equations can be written for the inductor and condenser as shown in figures 1(c) and 1(d). The equation for the inductor becomes

$$\Delta_n E_k = -L_n \frac{di_n}{dt} \tag{7}$$

The equation for the capacitor becomes

$$\Delta_n \frac{dE_k}{dt} = -\frac{1}{C_n} i_n \tag{8}$$

The final element to be considered is the ideal transformer as shown in figure 1(e). The ideal transformer is governed by two laws, one relating the currents in the two coils and one relating the voltage drops across the coils. The turns ratio r_n of the coils, as shown in the figure, enters into both equations. Using a prime to indicate quantities in the upper coil the equations relating currents and voltages are as follows:

$$i_n' = -r_n i_n \tag{9}$$

$$\Delta_n E_k' = \frac{1}{r_n} \Delta_n E_k \tag{10}$$

The currents are related by an algebraic equation while the voltages are related by a difference equation, since all voltages are defined with respect to the same ground.

BEAM WITH TORSIONAL LOADING

A beam with torsional loading is shown in figure 2(a). It will be assumed that the loading consists of a finite number of concentrated torques. If the applied load is distributed, it must be replaced in some manner by an equivalent set of concentrated loads. An element of the beam at the kth station is shown in figure 2(b). The equation of equilibrium of this element, relating applied load and section torque (fig. 2(c)), is as follows:

$$\Delta_k T_n = -Q_k \tag{11}$$

The operator Δ_k indicates the jump in a function across the kth station.

The rotation (angle of twist) at any point is related to the section torque by the equation

$$\frac{d\phi}{dx} = \frac{T}{GJ} \tag{12}$$

The difference between ϕ at either end of the nth bay, or segment of the beam, is given by the area under the T/GJ diagram as can be seen from an integration of equation (12) as follows:

$$\phi_{k+1} = \phi_k + \int_{x_k}^{x_{k+1}} \frac{T\,dx}{GJ} \tag{13}$$

The length of the nth bay will be indicated as λ_n and the average value of $1/GJ$ over the nth bay as $1/GJ_n$. Since T is constant over the nth bay equation (13) may be written as follows:

$$\phi_{k+1} - \phi_k = \left(\frac{\lambda_n}{GJ_n}\right)T_n \tag{14}$$

The $1/GJ$ diagram is shown in figure 2(d) where the average values of $1/GJ_n$ are indicated as a stepped diagram. The rotations are shown in figure 2(e) as a broken-line diagram. The operator Δ_n may be introduced and defined as the increase in a function across the nth bay. Using this operator, equation (14) becomes

$$\Delta_n\phi_k = \left(\frac{\lambda_n}{GJ_n}\right)T_n \tag{15}$$

The structural problem is now governed by two first-order difference equations given as equations (11) and (15). It is now necessary to choose two electrical equations having the same form in order to design the analogous circuit. Equation (11) relates forces to forces and must correspond to an electrical equation relating currents to currents. The only electrical equation having the correct form is equation (3) which expresses Kirchhoff's nodal law. By comparing equation (3) with equation (11) the correspondence between currents and forces becomes obvious. This correspondence is illustrated in figure 3(a).

Equation (15) relates forces to displacements and must correspond to an electrical equation relating current to voltage. Equations (6), (7), and (8) each have the correct form and any one of these equations may be used. Equation (6) involving a resistor will be chosen for the present case. The correspondence between electrical and structural quantities is shown in figure 3(b). The components of the circuit which are shown in figures 3(a) and 3(b) may be joined together to obtain the complete circuit as shown in figure 3(c).

In order for the analogy to be complete it is also necessary that the end conditions shall be correctly represented in the circuit. At an end where the rotation is zero the corresponding voltage is brought to zero by grounding the circuit. At an end where the section torque is zero this force condition may be taken care of directly without converting it to a condition upon the derivative of the rotation as is necessary in analytical solutions. It is necessary that the corresponding current shall be zero. This merely means that there must be no circuit elements beyond the end of the beam. Such a boundary condition is oftentimes referred to as a natural boundary condition.

The elements of correspondence between the structure and the analogous circuit may be outlined as given in table 2.

BEAM WITH BENDING LOADS

The problem of torsional loading was explained in detail in order to provide a simple introduction to the process of designing an analogous circuit. The problem of bending due to vertical loads will now be treated more briefly. The distributed loading is assumed to have been replaced by a set of equivalent forces with P_k acting at station k as shown in figure 4(a). Vertical equilibrium of an element at the kth station, as shown in figure 4(b), provides the following equation relating section shear to applied load:

$$\Delta_k V_n = -P_k \tag{16}$$

Equilibrium of moments acting upon the nth bay; as shown in figure 4(c), gives the following relation between bending moment and shear:

$$\Delta_n M_k = \lambda_n V_n \tag{17}$$

The remaining equations may be most conveniently derived by considering the conjugate beam loaded with the M/EI diagram. This loading must be assumed to be replaced by a set of equivalent concentrations as shown in figure 4(d). The slopes are computed as the shears in the conjugate beam as shown in figure 4(e). This gives the following relation between moment and slope:

$$\Delta_k \beta_n = -\left(\frac{\lambda_k}{EI_k}\right) M_k \tag{18}$$

The quantity $1/EI_k$ may be computed as the average value of $1/EI$ over the length λ_k which extends between midpoints of the bays which are adjacent to the kth station. The deflections are obtained as the bending moments in the conjugate beam as shown in figure 4(f). The relation between slope and deflection is given by

$$\Delta_n w_k = \lambda_n \beta_n \tag{19}$$

The structural theory is expressed by four first-order difference equations given as equations (16) to (19). It is now necessary to choose

four corresponding circuit equations. Equation (16) relates forces to forces at the kth station and calls for an application of Kirchhoff's law at the kth node of a circuit. Corresponding currents are illustrated in figure 5(a) and are related by the equation

$$\Delta_k i_n = I_k \tag{20}$$

Equation (17) is also a relation between force quantities and calls for another application of Kirchhoff's law. Since equation (17) relates to the nth bay of the structure, the corresponding currents must be associated with the nth node of a circuit as shown in figure 5(b). These currents will be indicated with primes and are related by the following equation:

$$\Delta_n i_k' = I_n' \tag{21}$$

The next structural equation to be considered is equation (18) which relates slope to moment. This is a relation between a displacement quantity and a force quantity. The corresponding electrical equation may be obtained by considering a resistor between two nodes as shown in figure 5(c). Since the current in this resistor is analogous to bending moment the current is indicated with a prime. Ohm's law gives the following equation:

$$\Delta_k E_n' = -R_k i_k' \tag{22}$$

One structural equation remains to be considered. Equation (19) relates displacements to displacements. This type of equation did not occur in the torsion problem. An electrical equation relating voltages is required. Such an equation is given by the transformer law. Comparing equation (10) with equation (19) indicates that these equations are not of the same form. However, the electrical equation will take the same form as the structural equation if one coil of the transformer is grounded as shown in figure 5(d). If the turns ratio of the transformer is r_n, the relation between voltages is given by

$$\Delta_n E_k = r_n E_n' \tag{23}$$

It is now necessary to assemble the components shown in figure 5 into a complete circuit in which the currents and voltages will be consistent. The required arrangement is shown in figure 6. An examination of this figure, along with figure 5, will show that all of the voltages and currents are consistent. The group of four components consisting of two nodes, a resistor, and a transformer may be referred to as one cell of the circuit. Not only must it be shown that the voltages and currents will be consistent when the circuit elements are connected but it must also be shown that the current law for the transformer is not violated. This current law is given by equation (9). In terms of the currents shown in figure 6 this current law becomes

$$I_n' = -r_n i_n \tag{24}$$

If the corresponding structural quantities, as illustrated in figure 5, are substituted into equation (24), the equation becomes an identity. Hence, this condition will always be satisfied. When the circuit elements are connected the circuit appears as shown in figure 7.

The elements of correspondence of the analogy may be summarized as in table 3.

BEAMS WITH TORSIONAL AND BENDING VIBRATION

The structural equations for a vibrating beam may be conveniently formulated by using D'Alembert's principle. In the case of torsion the concentrated torque load may be expressed in terms of equivalent concentrated mass moments of inertia as follows:

$$Q_k = -I\phi_k \frac{d^2\phi_k}{dt^2} \tag{25}$$

The additional structural equations are the same as for the static case. Equation (25) expresses a relation between forces and displacements. When a structural equation relating forces and displacements contains time derivatives it is not immediately obvious as to whether the corresponding circuit element should be an inductor, resistor, or capacitor. This decision can be made only after the complete circuit is designed and assembled. The condition of consistency of the currents, voltages, and their time derivatives will indicate whether or not the correct elements have been chosen.

In the present case the correct element is a condenser as shown in figure 8(a). The relation between current and voltage is given by

$$I_k = -C_k \frac{dE_k}{dt} \tag{26}$$

Comparing equation (26) with equation (25) it is seen that voltage is analogous to rotational velocity. It is possible to define an analogy in which voltage is analogous to rotation by merely differentiating equation (26) to obtain

$$\frac{dI_k}{dt} = -C_k \frac{d^2E_k}{dt^2} \tag{27}$$

If equation (27) is compared with equation (25) it is seen that displacement corresponds to voltage and torque corresponds to the time derivative of current. Equations (26) and (27) are equally satisfactory for defining the analogy. Throughout this paper voltage will always be assumed analogous to displacement and equation (27) will be used in the present case. The reason for this choice is that in calculating vibration modes the displacements are of fundamental interest. In a transient stress problem currents are usually made analogous to forces because the forces are of fundamental interest.

The structural equation of equilibrium as given by equation (11) corresponds to the following circuit equation:

$$\Delta_k\left(\frac{di_n}{dt}\right) = \frac{dI_k}{dt} \tag{28}$$

The nodal point for this equation is shown in figure 8(b). The structural equation relating section torque to rotation, as given by equation (15), corresponds to the circuit element shown in figure 8(c). In order that the currents and voltages in the final circuit shall be consistent, it is necessary that this element be chosen as an inductor. The electrical equation is as follows:

$$\Delta_n E_k = -L_n \frac{di_n}{dt} \tag{29}$$

The complete circuit diagram is shown in figure 9. The elements of correspondence of the analogy may be summarized as in table 4.

In the case of bending vibration the applied load is an inertia load given by the formula

$$P_k = -m_k \frac{d^2 w_k}{dt^2} \tag{30}$$

The corresponding electrical equation is obtained from a condenser as shown in figure 10(a):

$$\frac{dI_k}{dt} = -C_k \frac{d^2 E_k}{dt^2} \tag{31}$$

The remaining structural equations for the vibration case are the same as for the static case.

The equation relating currents at the kth node of the shear circuit, as shown in figure 10(b), is as follows:

$$\Delta_k\left(\frac{di_n}{dt}\right) = \frac{dI_k}{dt} \tag{32}$$

The equation relating currents at the nth node of the moment circuit, as shown in figure 10(c), is as follows:

$$\Delta_n\left(\frac{di_k'}{dt}\right) = \frac{dI_n'}{dt} \tag{33}$$

The structural equation relating slope and moment corresponds to an electrical equation relating voltage and current in a circuit element as shown in figure 10(d). This element must be an inductor in order to obtain consistent voltages and currents in the complete circuit. The electrical equation is

$$\Delta_k E_n' = -L_k \frac{di_k'}{dt} \tag{34}$$

A transformer is required for the vibration case just as in the static case and the voltages are again related by equation (23).

The complete circuit is shown in figure 11. The elements of correspondence of the analogy may be summarized as in table 5.

BEAM IN BENDING WITH AXIAL TENSION

A static-loading case will be considered for a beam with vertical loads and axial tension as shown in figure 12(a). The distributed loading has been replaced by a set of equivalent concentrated loads. A small element of the beam at the kth station is shown in figure 12(b) with the vertical load P_k. The resultant internal forces have been resolved into vertical and horizontal components. The horizontal component is the tension T_n in the nth bay. This quantity is known or may be computed by direct quadrature as in the case of centrifugal forces. The vertical component V_{sn} is the statically determinant part of the section shear and may be obtained by direct integration of the vertical loads. The condition for vertical equilibrium gives

$$\Delta_k V_{sn} = -P_k \tag{35}$$

The total shear on a cross section consists of a statically determinate part and an indeterminate part V_{in}. The total shear V_n may be expressed as the difference of the two parts

$$V_n = V_{sn} - V_{in} \tag{36}$$

The total shear acts on a plane normal to the axis of the beam as shown in figure 12(c). Since the slope of the axis β_n is a small angle it is seen from figure 12 that the section shear can be obtained from the following formula:

$$V_n = V_{sn} - T_n\beta_n \tag{37}$$

Comparing equations (36) and (37) gives the formula for V_{in}:

$$V_{in} = T_n\beta_n \tag{38}$$

The remaining structural equations are the same as for the case of bending without tension and are given as equations (17), (18), and (19). It is convenient in designing the analogous circuit to substitute equation (19) into equation (38) in order to obtain a difference equation as follows:

$$\Delta_n w_k = \left(\frac{\lambda_n}{T_n}\right) V_{in} \tag{39}$$

The analogous circuit for the present case differs from that for bending without tension by changes in the shear circuit. The new elements which are required are shown in figure 13. At the kth node the equation relating currents is given as before by equation (20). The current i_n, as indicated in figure 13(a), represents only the statically determinate part of the shear in agreement with equation (35). Equation (39) relates a force to a displacement and calls for a new circuit element in the shear circuit. A resistor must be used as shown in figure 13(b) if a resistor is used in the moment circuit. The current through this element is the indeterminate part of the shear.

Equation (36) expresses an algebraic relation between force quantities. An analogous circuit equation can be obtained by considering two elements in parallel as shown in figure 13(c). One coil of the transformer, carrying a current which is analogous to the total shear, is in parallel with the resistor carrying the indeterminate part of the shear. The relation between currents, from Kirchhoff's law, is seen from the figure to be

$$i_n''' = i_n - i_n'' \tag{40}$$

The circuit elements may be arranged as indicated in figure 14. If the voltages and currents which have been previously associated with each element are examined, they will be found to be consistent in this arrangement. The complete circuit with loading generators is shown in figure 15. It is interesting to note that the addition of axial tension makes only a minor increase in difficulty when the solution is being obtained on an analog computer. However, when the solution is being obtained on a digital computer, the addition of axial tension makes a very large increase in the calculation effort since the solution can no longer be obtained by direct quadrature. This analogy is useful in the analysis of such structures as helicopter blades or suspension bridges.

EFFECT OF SHEARING STRAINS ON BENDING DEFLECTIONS

The effect of shearing strains upon the bending deflections of beams may be easily included in the analogous circuit. The only structural equation which must be revised is that which relates slope to deflection. In figure 16(a) there is shown a short segment of a beam within the

nth bay. A vertical line has been drawn normal to the axis of the beam as it would appear before loading. After loading the axis deforms into a curve as shown in figure 16(b). The physical points lying on the original normal now lie on the solid line which makes an angle γ_n with a perpendicular to the axis. The original normal rotates, because of the loading, through an angle β_n from its original vertical position.

Introducing θ as the slope of the axis of the beam at any point gives

$$\theta = \frac{\partial w}{\partial x} \tag{41}$$

From figure 16(b) it is seen that θ may be expressed as

$$\theta = \beta + \gamma \tag{42}$$

It is necessary to express the shearing strain in terms of the shear by the formula

$$\gamma = \frac{V}{GA} \tag{43}$$

In this formula the area A is the area of a cross section which is resistant to vertical shear. This section property was introduced and defined by Kirste (reference 1) for thin-walled beams with closed cross sections such as airplane wings or fuselages. Substituting equation (43) into equation (42) gives

$$\theta = \beta + \frac{V}{GA} \tag{44}$$

Introducing finite differences into equation (41) gives

$$\lambda_n \theta_n = \Delta_n w_k \tag{45}$$

Writing equation (44) for the nth bay gives

$$\theta_n = \beta_n + \frac{V_n}{GA_n} \tag{46}$$

Equations (45) and (46) are the new structural equations which must be represented by electrical circuits and analogous electrical equations.

The required circuit elements to allow for the effect of shearing strains are shown in figure 17. The nth node in the moment circuit is shown in figure 17(a). Equation (46) relates force and displacement quantities. The analogous electrical relations from Ohm's law for a resistor are illustrated in figure 17(b). The circuit equation which is analogous to equation (46) becomes

$$E_n'' - E_n' = R_n' I_n' \tag{47}$$

Equation (45) relates two displacement quantities. The analogous electrical equation is obtained from the transformer law and is illustrated in figure 17(c). The electrical equation becomes

$$r_n E_n'' = \Delta_n E_k \tag{48}$$

When the elements are assembled into a complete circuit it is found that in order to obtain consistent currents the current I_n' in the resistor shown in figure 17(b) must be analogous to the product $\lambda_n V_n$ rather than V_n as would be suggested by comparing equations (46) and (47). The assembled circuit is shown in figure 18.

EFFECT OF ROTARY INERTIA UPON BENDING VIBRATIONS

It is possible to include the effect of rotary inertia in the circuit for bending vibration in a rather simple manner. In order to formulate this analogy it is necessary to consider the effect of applied moment loads upon the behavior of a beam. In figure 19(a) there is shown a cantilever beam with moment loads distributed along its length. These moment loads are similar to the twisting moments which occur in elastic plates. The distributed moment load must be replaced by an equivalent set of concentrated couples. The nth bay of the beam is shown in figure 19(b) with a concentrated couple T_n. Rotational equilibrium of this element gives the following structural equation:

$$\Delta_n M_k = \lambda_n V_n + T_n \tag{49}$$

The remaining structural equations are not changed from those given previously for bending vibration. If the moment loads are due to rotary inertia, D'Alembert's principle gives the following formula for the concentrated couples:

$$T_n = -I_{\beta_n} \frac{d^2\beta_n}{dt^2} \tag{50}$$

It is assumed that the distributed rotary inertia has been replaced by an equivalent set of concentrated values which are indicated as I_{β_n} for the nth bay.

The analogous circuit equation for equation (49) is obtained from Kirchhoff's nodal law. The nth node of the moment circuit is shown in figure 19(c). Kirchhoff's law gives

$$\Delta_n i_k' = I_n' - I_n'' \tag{51}$$

Equation (51) is analogous to equation (49). In order to obtain an electrical equation which is analogous to equation (50) it is necessary to introduce a condenser at the nth node of the moment circuit as shown in figure 19(d). The applied concentrated couple is analogous to the time derivative of the current and the appropriate electrical equation becomes

$$\frac{dI_n''}{dt} = C_n \frac{d^2E_n'}{dt^2} \tag{52}$$

For the vibration problem it is necessary to differentiate equation (51) with respect to time to obtain

$$\Delta_n \frac{di_k'}{dt} = \frac{dI_n'}{dt} - \frac{dI_n''}{dt} \tag{53}$$

The new elements of correspondence in the analogy become immediately apparent by comparing equations (52) and (53) with equations (49) and (50). The complete circuit is shown in figure 20.

GRIDWORK OF BEAMS HAVING NO TORSIONAL STIFFNESS

A cantilever gridwork, as shown in figure 21(a), will be considered. The structure is loaded with vertical loads normal to the plane of the gridwork. It will be assumed that the ribs and spars have no torsional stiffness. The condition of structural continuity requires that the ribs and spars must have the same vertical deflections at the intersection points. There is no relation between the slopes and rotations of the ribs and spars. From these considerations it may be realized that the solution for a sweptback gridwork, as shown in figure 21(b), is identically the same as for the straight gridwork for a load at the same corresponding point.

Since the spars and ribs act as ordinary beams in bending, they may be represented by analogous circuits which have been previously presented. One cell of the circuit for the kth rib is shown in figure 22(a) and one cell of the circuit for the jth spar is shown in figure 22(b). The notation of the spar circuit is exactly the same as was previously used for a beam.

In the circuit for the kth rib the jth node in the shear circuit corresponds to the structural intersection point of the kth rib and jth spar. Similarly, in the circuit for the jth spar the kth node corresponds to the same structural intersection point. Consequently, from the structural condition of continuity the voltage E_j (corresponding to w_j) and the voltage E_k (corresponding to w_k) must be the same under all loading conditions. This requires that the shear circuits be connected to form a planar network as shown in figure 22(c). The voltage E_{jk} (corresponding to w_{jk}) is identically the same as E_j or E_k. Similarly, the loading current I_{jk} (corresponding to the concentrated load P_{jk}) is identically the same as I_j in the rib circuit or I_k in the spar circuit.

The only boundary conditions which need to be considered in designing the circuit are the conditions that the deflection and slope of the spars must be zero at the root. This condition is obtained by grounding the shear and moment circuits at these points. The remaining boundary conditions are natural boundary conditions which are automatically satisfied by the analogous circuit.

ADDITIONAL ANALOGIES

The analogies which have been developed were chosen as the most elementary types which might be used to provide an introduction to this

subject for the structural engineer. Many additional analogies have been published, although some of them do not satisfy the condition of being true dynamic analogies in the sense that they are valid for any time history of the variables.

Analogous circuits for beams with coupled bending and torsion are given by McCann and MacNeal in reference 2. This reference gives circuits for several complete beams including boundary conditions. Analogous circuits for elastic plates have been given by MacNeal (reference 3). Applications of the beam analogies to aeroelastic problems are described in reference 4.

SCALE FACTORS

Once it has been determined that a mechanical system and an electrical network satisfy the same form of equations, the electrical network could be constructed by equating currents to forces, voltages to displacements, and electrical time to mechanical time. This procedure will usually lead to a group of physical electrical elements that are of very inconvenient magnitudes. For example, a mass of one slug is not at all unreasonable but the equivalent electrical element, a capacitor of one farad, is very unreasonable.

To avoid such difficulties, scale factors (or modeling factors) are introduced in the relationships between mechanical and electrical quantities, and these factors are chosen so as to make the resulting electrical circuit as reasonable as possible as regards the availability of elements of the required sizes and the accuracy of measurements.

One scale factor is introduced relating mechanical time and electrical time, and another, relating mechanical energy and electrical energy. A group of scale factors relating the dependent variables (displacements and voltages), in the manner of a linear transformation of coordinates, is also introduced. Usually the matrix of coefficients of this linear transformation will be a diagonal matrix so that each displacement is calculated from one voltage of the electrical circuit. In such cases there will be several distinct scale factors relating displacements and voltages, each of which is chosen to give the most reasonable values of electrical-circuit elements. In simple examples the scale factor may be the same for all displacements giving a total of three scale factors.

The details of this process will not be further discussed in this report since it relates to the design of circuits for use on analog computers and not to the form of the required circuits and the equations

describing them. In practice the form of the circuit is first determined and values are given for all of the elements in algebraic form as if all the scale factors were unity. At a later stage scale factors are chosen and numerical values of the elements are computed. A more complete discussion of scale factors is included in reference 4.

CONCLUDING REMARKS

In order that electrical analogies may find their rightful amount of utilization in structural analysis, it is necessary that the structural engineer be enabled to acquire a reasonable understanding of the process whereby an analogous circuit is designed. This will enable him to know where electrical analog methods are useful and what degree of accuracy may be expected from such solutions. An attempt has been made herein to explain in very elementary terms the procedure for designing circuits which are analogous to statically determinate beams under various conditions. It is hoped that structural engineers will be enabled to proceed from this paper to the reading of references which are written from the viewpoint of electrical engineers. Emphasis has been placed upon the fact that the type of analogy described herein is a true dynamic analogy which permits the structure to be analyzed for transient as well as static and steady-state conditions.

California Institute of Technology
Pasadena, Calif., January 9, 1952

REFERENCES

1. Kirste, L.: Sur le calcul des poutres en caisson. L'Aérotechnique, (suppl. to L'Aéronautique), t. 16, no. 169, Jan. 1937, pp. 1-6, no. 173, May 1937, pp. 57-58.

2. McCann, G. D., and MacNeal, R. H.: Beam-Vibration Analysis with the Electric-Analog Computer. Jour. Appl. Mech., vol. 17, no. 1, March 1950, pp. 13-26.

3. MacNeal, R. H.: The Solution of Elastic Plate Problems by Electrical Analogies. Jour. Appl. Mech., vol. 18, no. 1, March 1951, pp. 59-67.

4. MacNeal, R. H., McCann, G. D., and Wilts, C. H.: The Solution of Aeroelastic Problems by Means of Electrical Analogies. Jour. Aero. Sci., vol. 18, no. 12, Dec. 1951, pp. 777-789.

TABLE 1

CORRESPONDENCE BETWEEN STRUCTURAL AND ELECTRICAL RELATIONSHIPS

Structural	Electrical
Equations relating -	
Forces to forces	Currents to currents
Forces to displacements	Currents to voltages
Displacements to displacements	Voltages to voltages
Equations expressing -	
Equilibrium	Kirchhoff's nodal law
Hooke's law	Ohm's law
Continuity	Transformer law

TABLE 2

ELEMENTS OF CORRESPONDENCE BETWEEN STRUCTURE AND ANALOGOUS CIRCUIT FOR BEAM WITH TORSIONAL LOADING

Structural	Electrical
$\Delta_k T_n = -Q_k$	$\Delta_k i_n = I_k$
$\Delta_n \phi_k = \left(\frac{\lambda_n}{GJ_n}\right) T_n$	$\Delta_n E_k = -R_n i_n$
Q_k	I_k
$-T_n$	i_n
$\frac{\lambda_n}{GJ_n}$	R_n
ϕ_k	E_k

TABLE 3

ELEMENTS OF CORRESPONDENCE BETWEEN STRUCTURE AND ANALOGOUS CIRCUIT FOR BEAM WITH BENDING DUE TO VERTICAL LOADS

Structural	Electrical
$\Delta_k V_n = -P_k$	$\Delta_k i_n = I_k$
$\Delta_n M_k = \lambda_n V_n$	$\Delta_n i_k' = I_n'$
$\Delta_k \beta_n = -\left(\frac{\lambda_k}{EI_k}\right) M_k$	$\Delta_k E_n' = -R_k i_k'$
$\Delta_n w_k = \lambda_n \beta_n$	$\Delta_n E_k = r_n E_n'$
P_k	I_k
$-V_n$	i_n
M_k	i_k'
β_n	E_n'
w_k	E_k
λ_n	r_n
$\frac{\lambda_k}{EI_k}$	R_k
$\lambda_n V_n$	I_n'

TABLE 4

ELEMENTS OF CORRESPONDENCE BETWEEN STRUCTURE AND ANALOGOUS CIRCUIT FOR BEAM WITH TORSIONAL VIBRATION

Structural	Electrical
$Q_k = -I\phi_k \frac{d^2\phi_k}{dt^2}$	$\frac{dI_k}{dt} = -C_k \frac{d^2E_k}{dt^2}$
$\Delta_k T_n = -Q_k$	$\Delta_k\left(\frac{di_n}{dt}\right) = \frac{dI_k}{dt}$
$\Delta_n \phi_k = \left(\frac{\lambda_n}{GJ_n}\right)T_n$	$\Delta_n E_k = -L_n \frac{di_n}{dt}$
$I\phi_k$	C_k
Q_k	$\frac{dI_k}{dt}$
ϕ_k	E_k
$-T_n$	$\frac{di_n}{dt}$
$\frac{\lambda_n}{GJ_n}$	L_n

NACA

TABLE 5

ELEMENTS OF CORRESPONDENCE BETWEEN STRUCTURE AND ANALOGOUS CIRCUIT FOR BEAM WITH BENDING VIBRATION

Structural	Electrical
$P_k = -m_k \frac{d^2 w_k}{dt^2}$	$\frac{dI_k}{dt} = -C_k \frac{d^2 E_k}{dt^2}$
$\Delta_k V_n = -P_k$	$\Delta_k\left(\frac{di_n}{dt}\right) = \frac{dI_k}{dt}$
$\Delta_n M_k = \lambda_n V_n$	$\Delta_n\left(\frac{di_k'}{dt}\right) = \frac{dI_n'}{dt}$
$\Delta_k \beta_n = -\left(\frac{\lambda_k}{EI}\right) M_k$	$\Delta_k E_n' = -L_k \frac{di_k'}{dt}$
$\Delta_n w_k = \lambda_n \beta_n$	$\Delta_n E_k = r_n E_n'$
m_k	C_k
P_k	$\frac{dI_k}{dt}$
$-V_n$	$\frac{di_n}{dt}$
M_k	$\frac{di_k'}{dt}$
β_n	E_n'
w_k	E_k
λ_n	r_n
$\frac{\lambda_k}{EI_k}$	L_k
$V_n \lambda_n$	$\frac{dI_n'}{dt}$

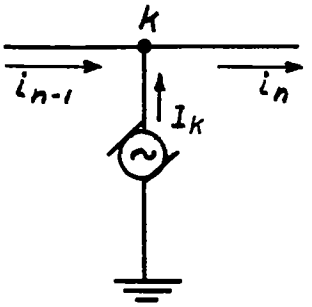

(a) Nodal point. $\Delta_k i_n = I_k$.

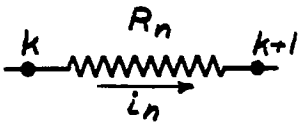

(b) Resistor. $\Delta_n E_k = -R_n i_n$.

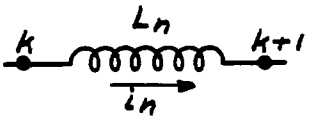

(c) Inductor. $\Delta_n E_k = -L_n \frac{di_n}{dt}$.

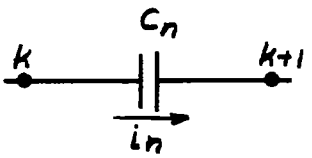

(d) Condenser. $\Delta_n \frac{dE_k}{dt} = -\frac{1}{C_n} i_n$.

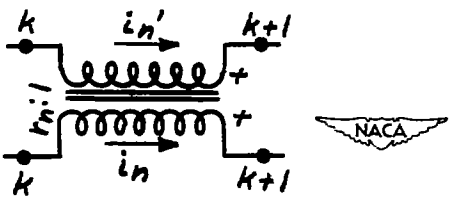

(e) Transformer. $i_n' = -r_n i_n$; $\Delta_n E_k' = \frac{1}{r_n} \Delta_n E_k$.

Figure 1.- Electrical circuit elements.

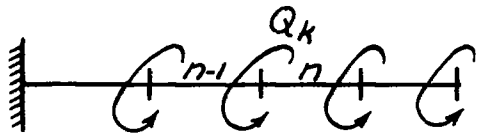

(a) Loads.

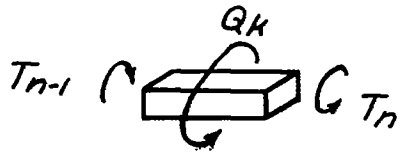

(b) Beam element at kth station.

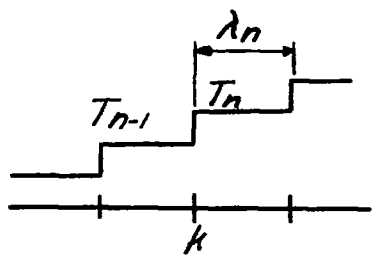

(c) Section torque. $\Delta_k T_n = -Q_k$.

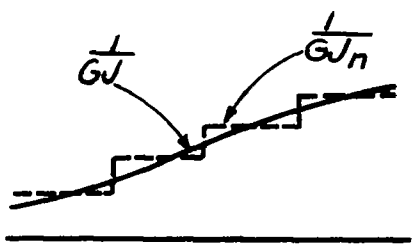

(d) Reciprocal of torsional stiffness.

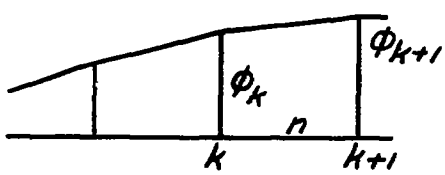

(e) Rotations. $\Delta_n \phi_k = \left(\frac{\lambda_n}{GJ_n}\right) T_n$.

Figure 2.- Beam in torsion.

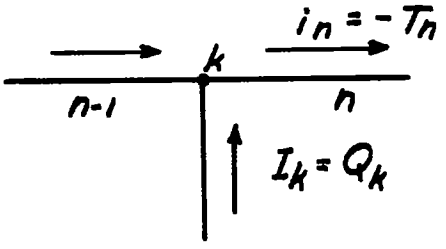

(a) Nodal point. $\Delta_k T_n = -Q_k$; $\Delta_k i_n = I_k$.

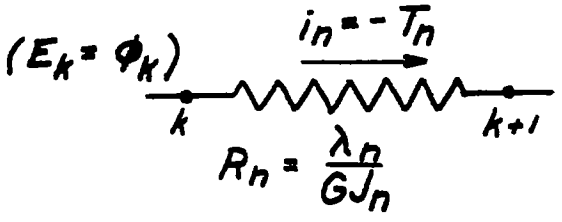

(b) Circuit element. $\Delta_n E_k = -R_n i_n$; $\Delta_n \phi_k = \left(\frac{\lambda_n}{GJ_n}\right) T_n$.

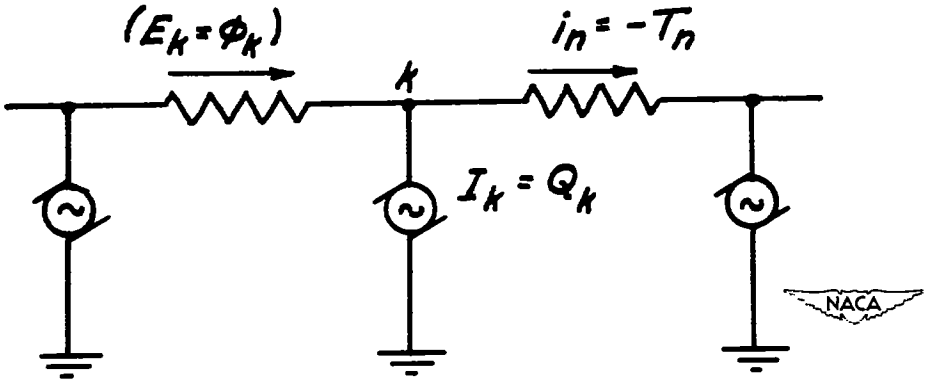

(c) Typical section of circuit.

Figure 3.- Analogous circuit for beam in torsion.

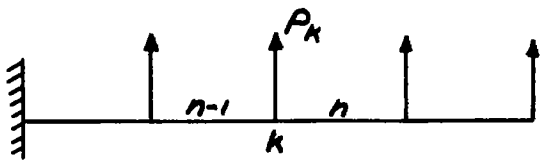

(a) Loads.

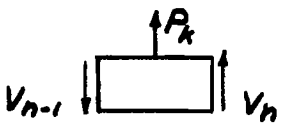

(b) Beam element at kth station. $\Delta_k V_n = -P_k$.

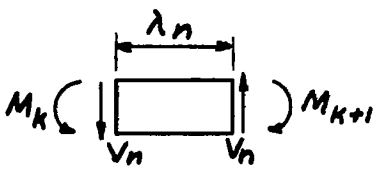

(c) Beam element in nth bay. $\Delta_n M_k = \lambda_n V_n$.

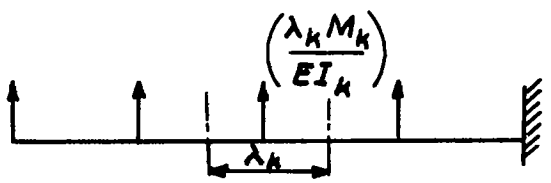

(d) Loads on conjugate beam.

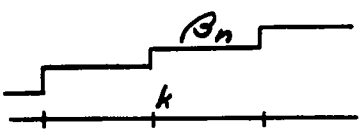

(e) Slopes. $\Delta_k \beta_n = -\left(\frac{\lambda_k}{EI_k}\right) M_k$.

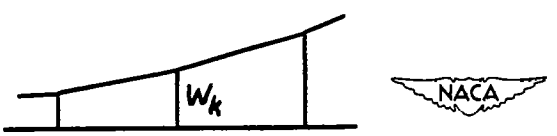

(f) Deflections $\Delta_n w_k = \lambda_n \beta_n$.

Figure 4.- Beam in bending.

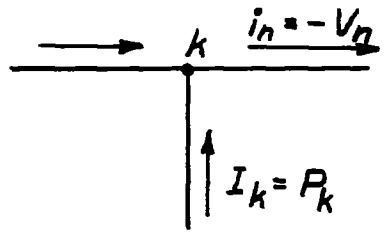

(a) kth node in shear circuit. $\Delta_k V_n = -P_k$; $\Delta_k i_n = I_k$.

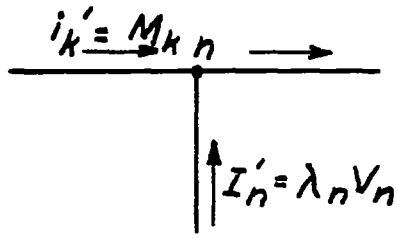

(b) nth node in moment circuit. $\Delta_n M_k = \lambda_n V_n$; $\Delta_n i_k' = I_n'$.

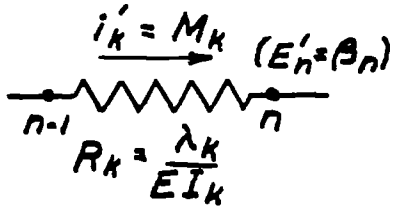

(c) kth circuit element in moment circuit. $\Delta_k \beta_n = -\left(\frac{\lambda_k}{EI_k}\right) M_k$;

$\Delta_k E_n' = -R_k i_k'$.

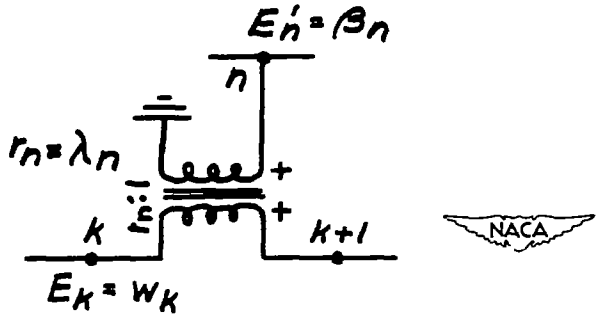

(d) nth circuit element in shear circuit. $\Delta_n w_k = \lambda_n \beta_n$; $\Delta_n E_k = r_n E_n'$.

Figure 5.- Breakdown of circuit for beam in bending.

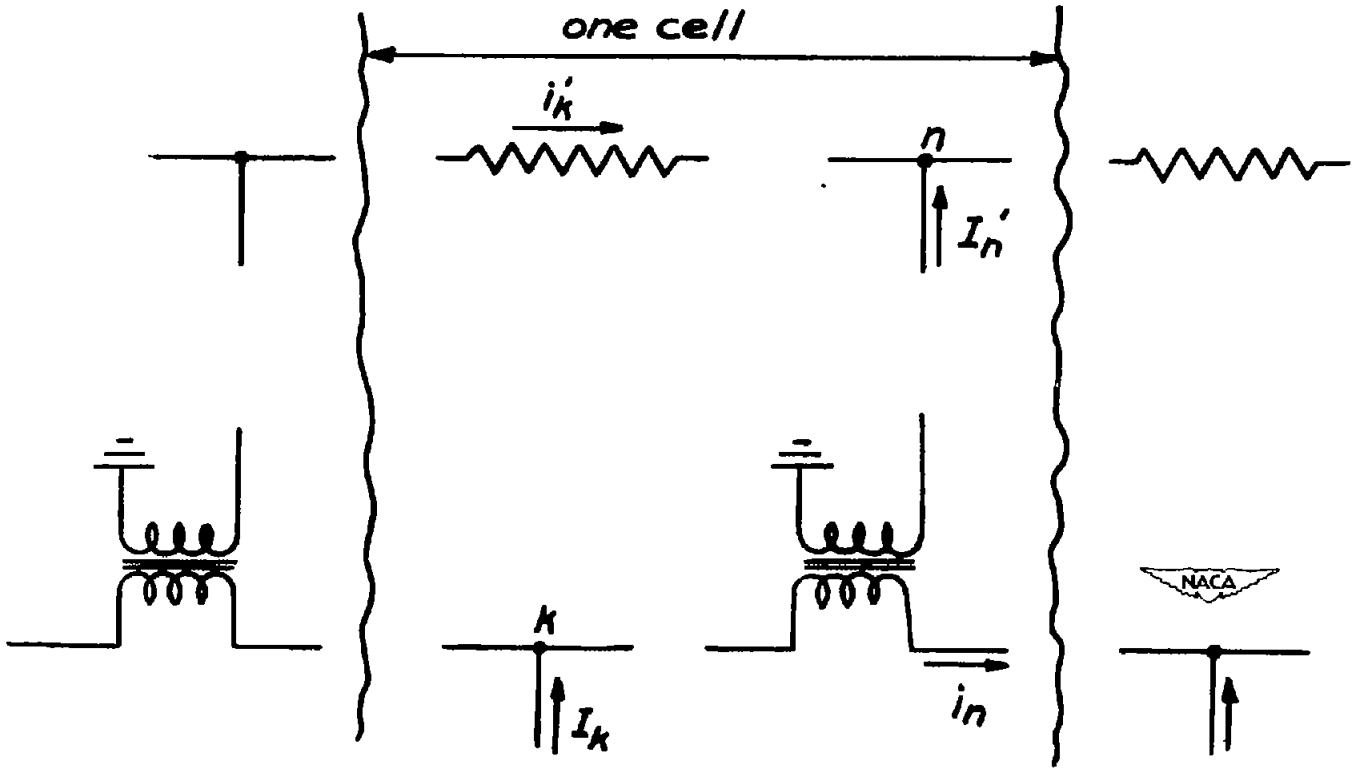

Figure 6.- Exploded diagram of circuit for beam in bending.

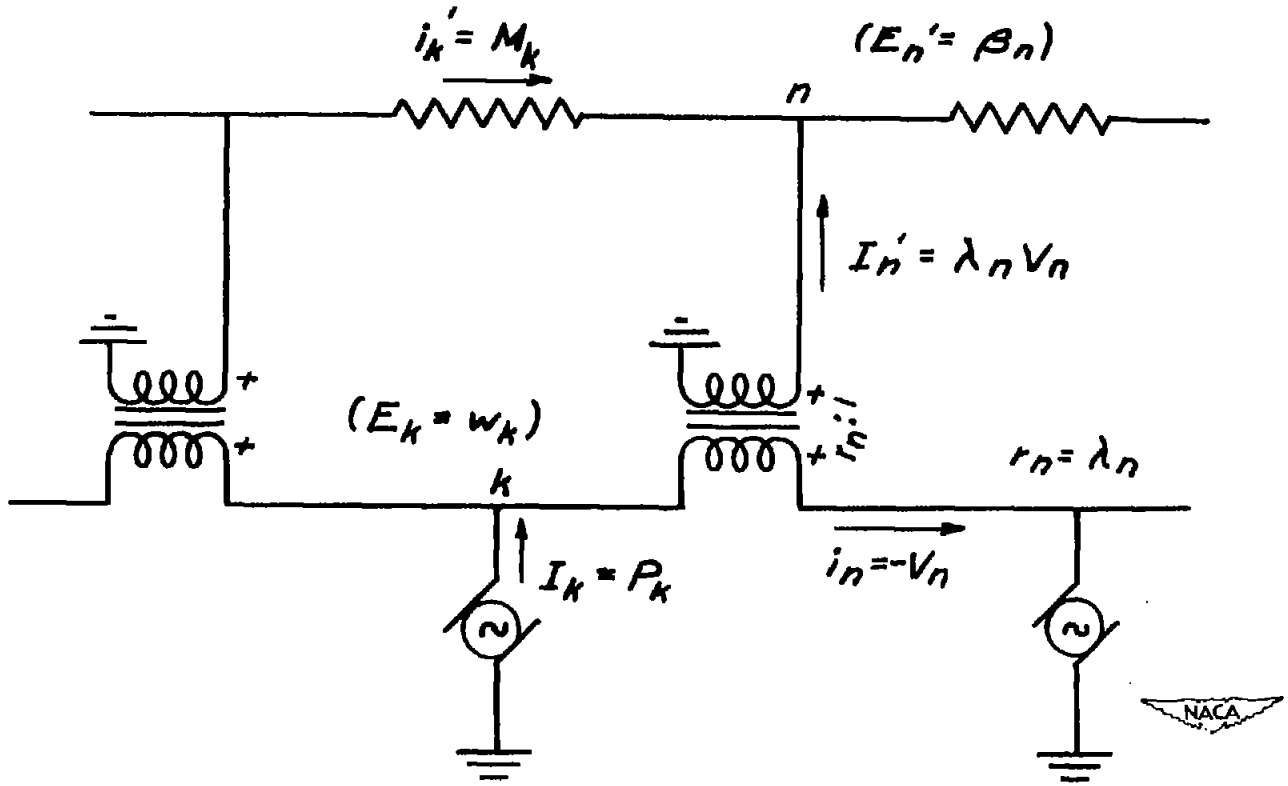

Figure 7.- Analogous circuit for beam in bending.

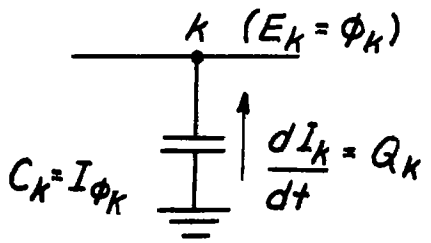

(a) Condenser. $Q_k = -I_{\phi_k} \frac{d^2\phi_k}{dt^2}$; $\frac{dI_k}{dt} = -C_k \frac{d^2E_k}{dt^2}$.

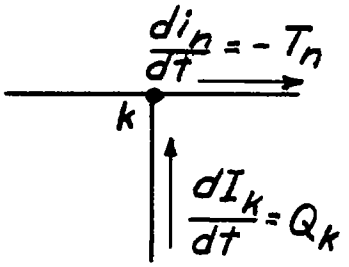

(b) Nodal point. $\Delta_k T_n = -Q_k$; $\Delta_k\left(\frac{di_n}{dt}\right) = \frac{dI_k}{dt}$.

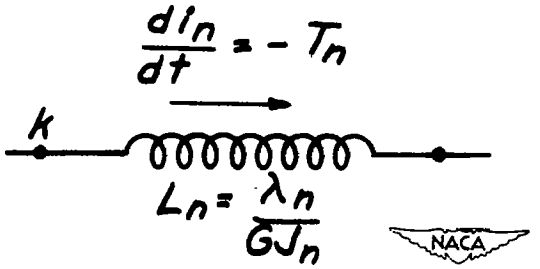

(c) Inductance. $\Delta_n\phi_k = \left(\frac{\lambda_n}{GJ_n}\right)T_n$; $\Delta_n E_k = -L_n \frac{di_n}{dt}$.

Figure 8.- Analogous circuit elements for torsional vibration.

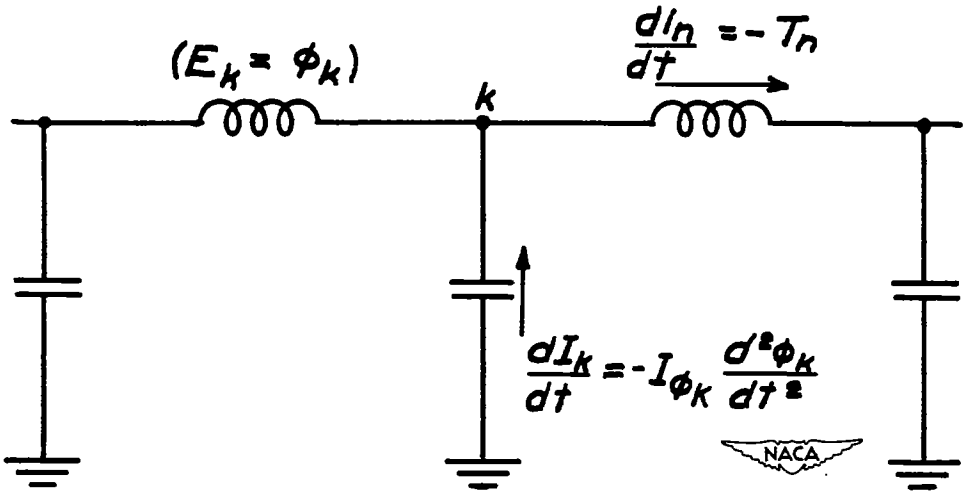

Figure 9.- Complete analogous circuit for torsional beam vibration.

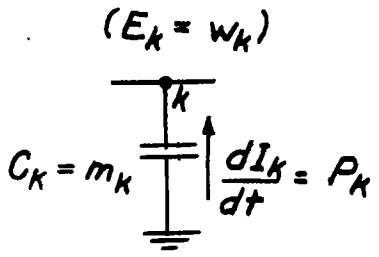

(a) Condenser at kth node of shear circuit.

$$P_k = -m_k \frac{d^2w_k}{dt^2}; \quad \frac{dI_k}{dt} = -C_k \frac{d^2E_k}{dt^2}.$$

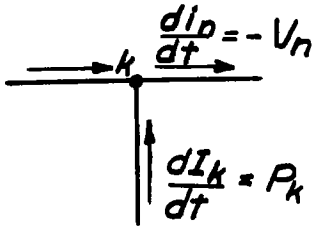

(b) kth node in shear circuit. $\Delta_k V_n = -P_k$; $\Delta_k\left(\frac{di_n}{dt}\right) = \frac{dI_k}{dt}$.

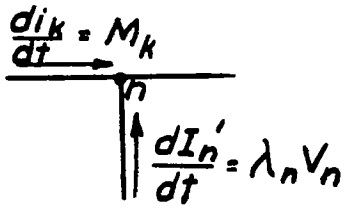

(c) nth node in moment circuit. $\Delta_n M_k = \lambda_n V_n$; $\Delta_n\left(\frac{di_k'}{dt}\right) = \frac{dI_n'}{dt}$.

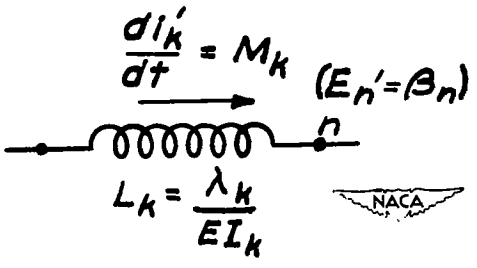

(d) Inductance in moment circuit. $\Delta_k \beta_n = -\left(\frac{\lambda_k}{EI_k}\right) M_k$; $\Delta_k E_n' = -L_k \frac{di_k'}{dt}$.

Figure 10.- Analogous circuit elements for bending vibration.

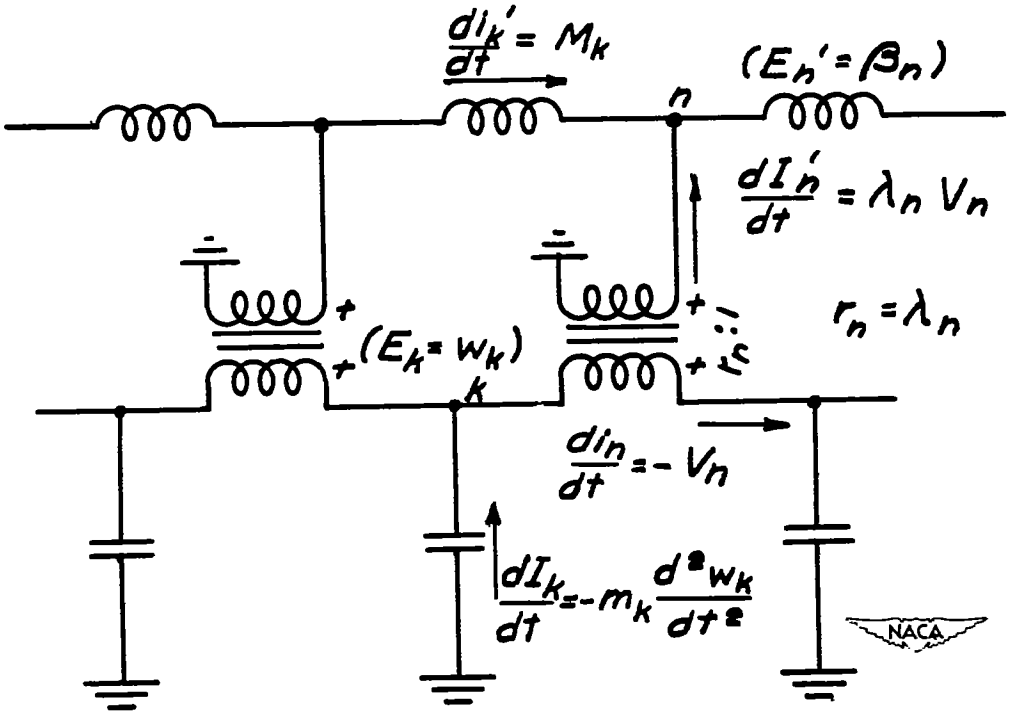

Figure 11.- Complete analogous circuit for bending beam vibration.

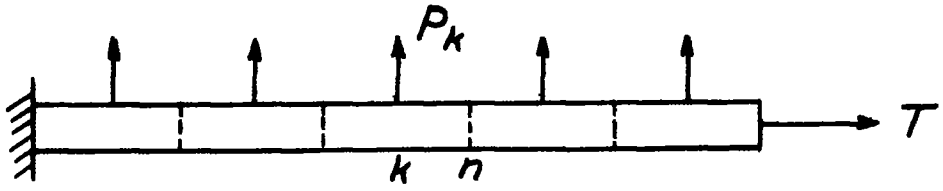

(a) Loaded beam.

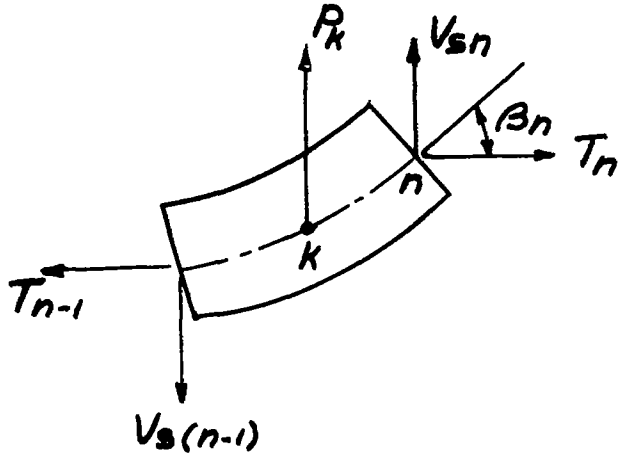

(b) Statically determinate shear.

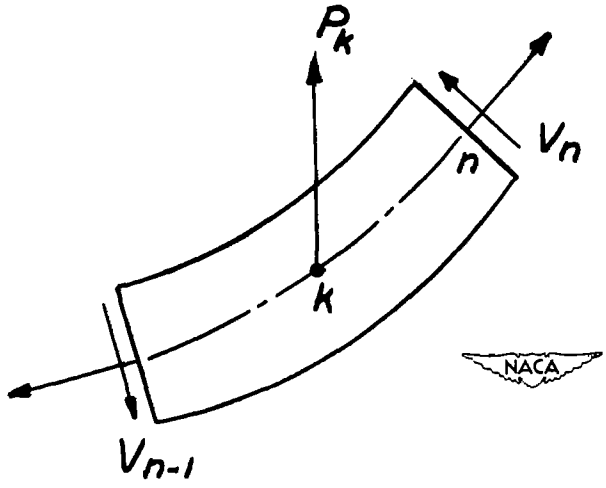

(c) Total shear.

Figure 12.- Beam in bending with axial tension.

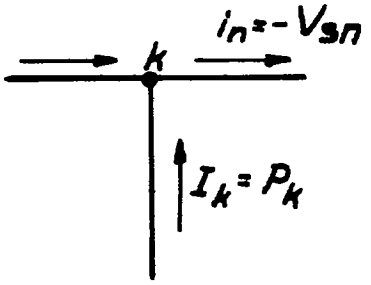

(a) kth node in shear circuit. $\Delta_k V_{sn} = -P_k$; $\Delta_k i_n = I_k$.

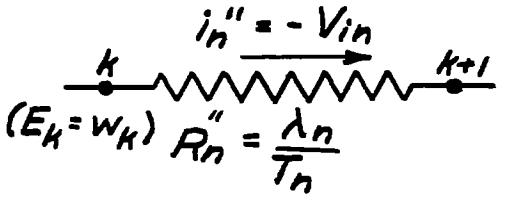

(b) Resistance element in shear circuit.
$\Delta_n w_k = \frac{\lambda_n}{T_n} V_{in}$; $\Delta_n E_k = -R_n'' i_n''$.

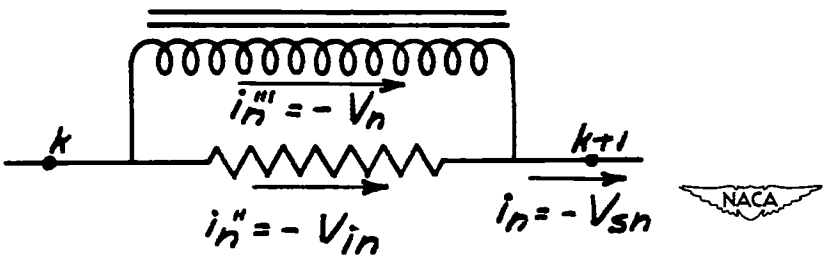

(c) Parallel elements in shear circuit.
$V_n = V_{sn} - V_{in}$; $i_n''' = i_n - i_n''$.

Figure 13.- Circuit elements for beam in bending with axial tension.

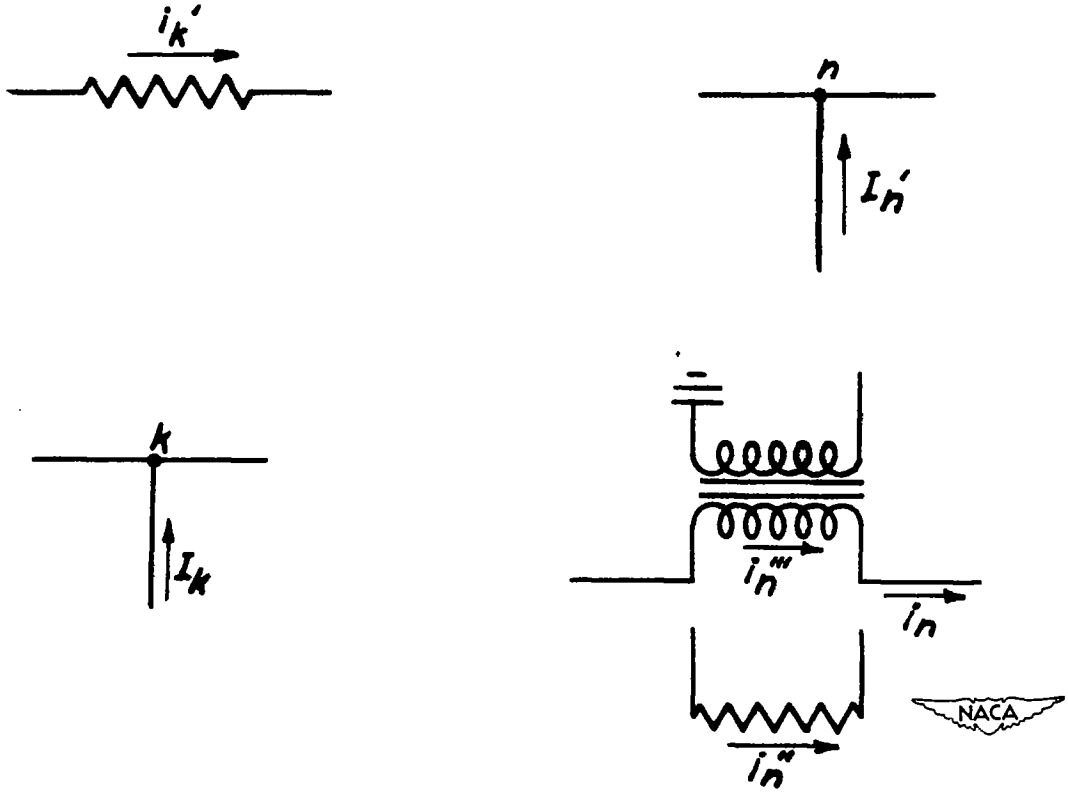

Figure 14.- Exploded diagram of one cell of circuit for beam in bending with tension.

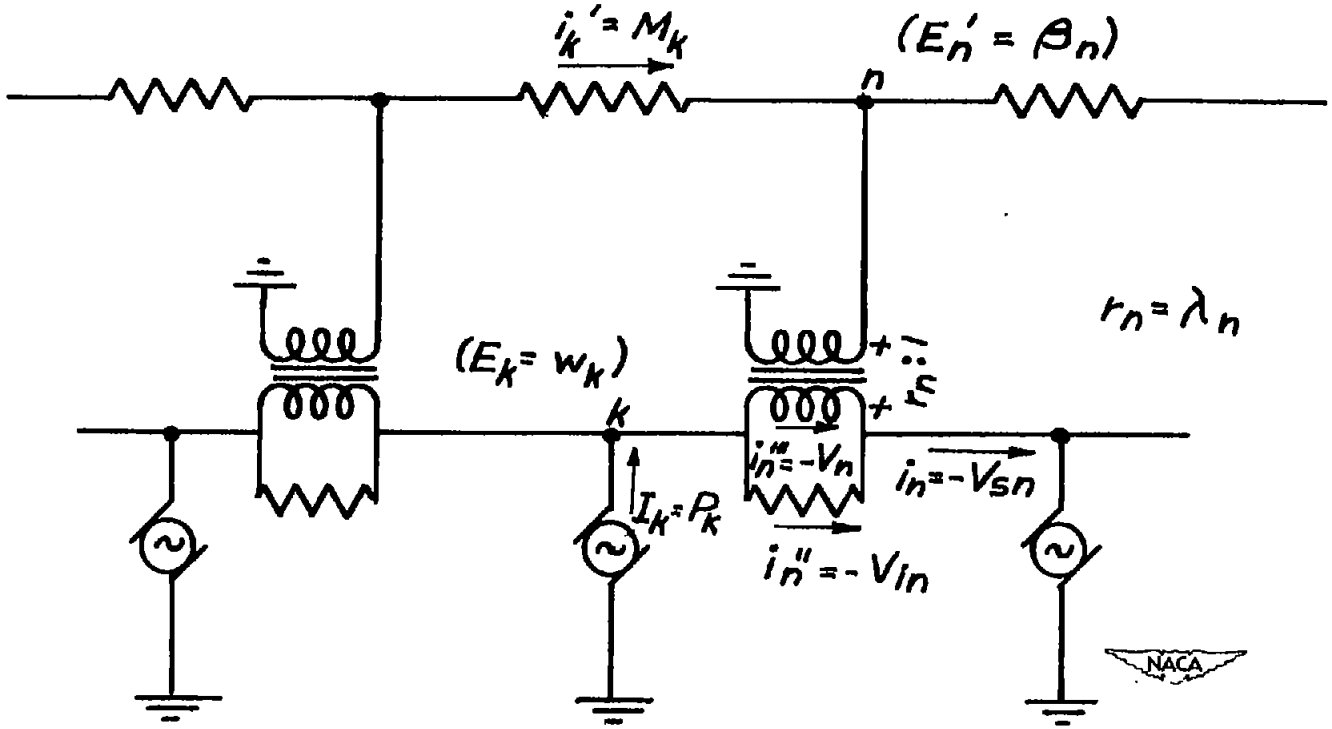

Figure 15.- Analogous circuit for beam in bending with axial tension.

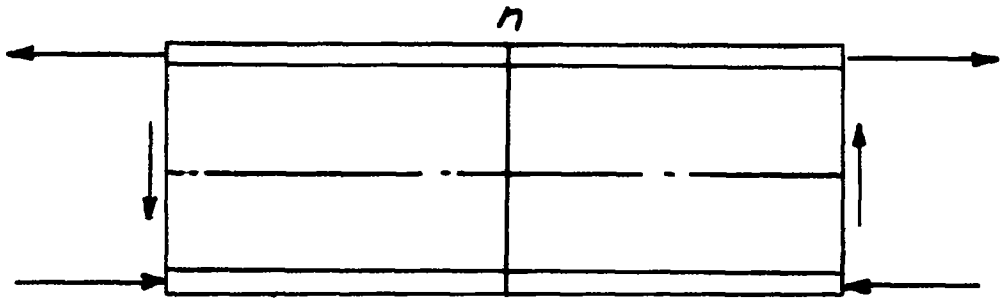

(a) Normal to beam axis before distortion.

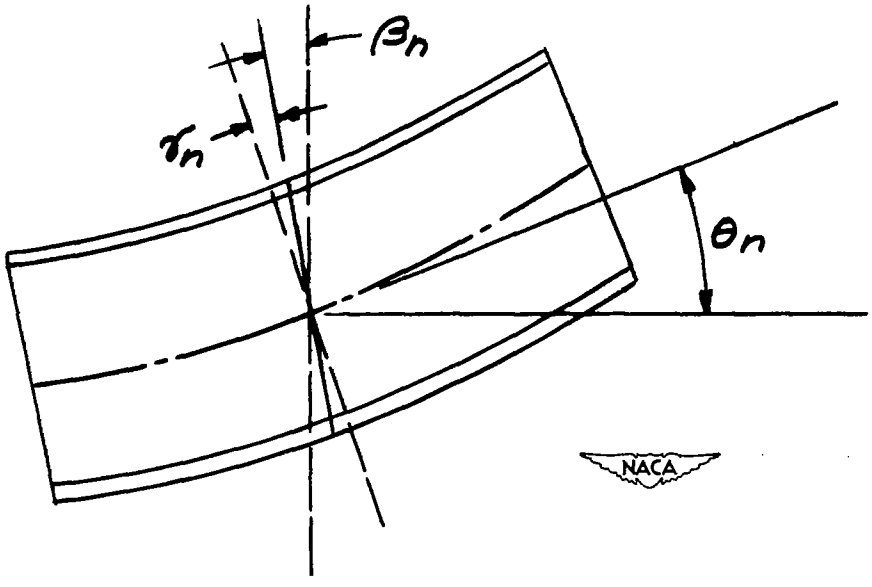

(b) Position of normal after distortion.

Figure 16.- Distortion of an element of a beam.

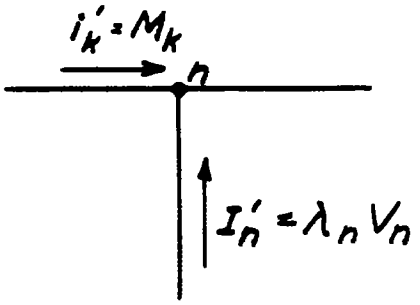

(a) nth node in moment circuit. $\Delta_n M_k = \lambda_n V_n$; $\Delta_n i_k' = I_n'$.

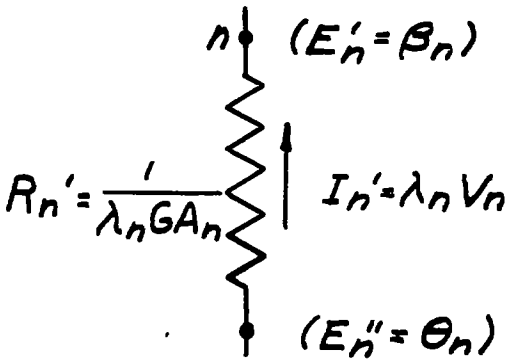

(b) Resistance element required by shearing strains.
$\theta_n - \beta_n = \frac{V_n}{GA_n}$; $E_n'' - E_n' = R_n' I_n'$.

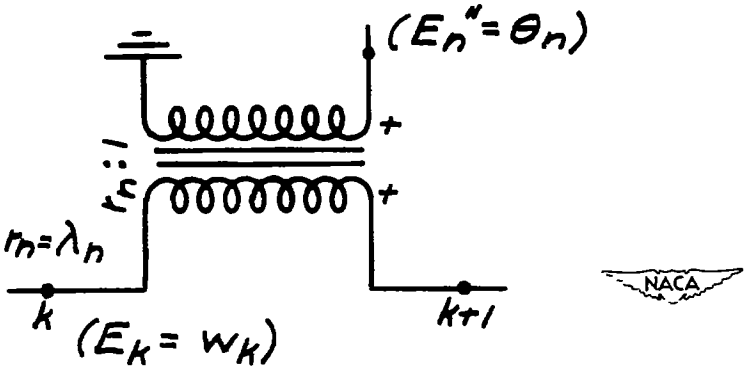

(c) Transformer in shear circuit. $\Delta_n w_k = \lambda_n \theta_n$; $\Delta_n E_k = \lambda_n E_n''$.

Figure 17.- Circuit elements to give effect of shearing strains on bending deflections.

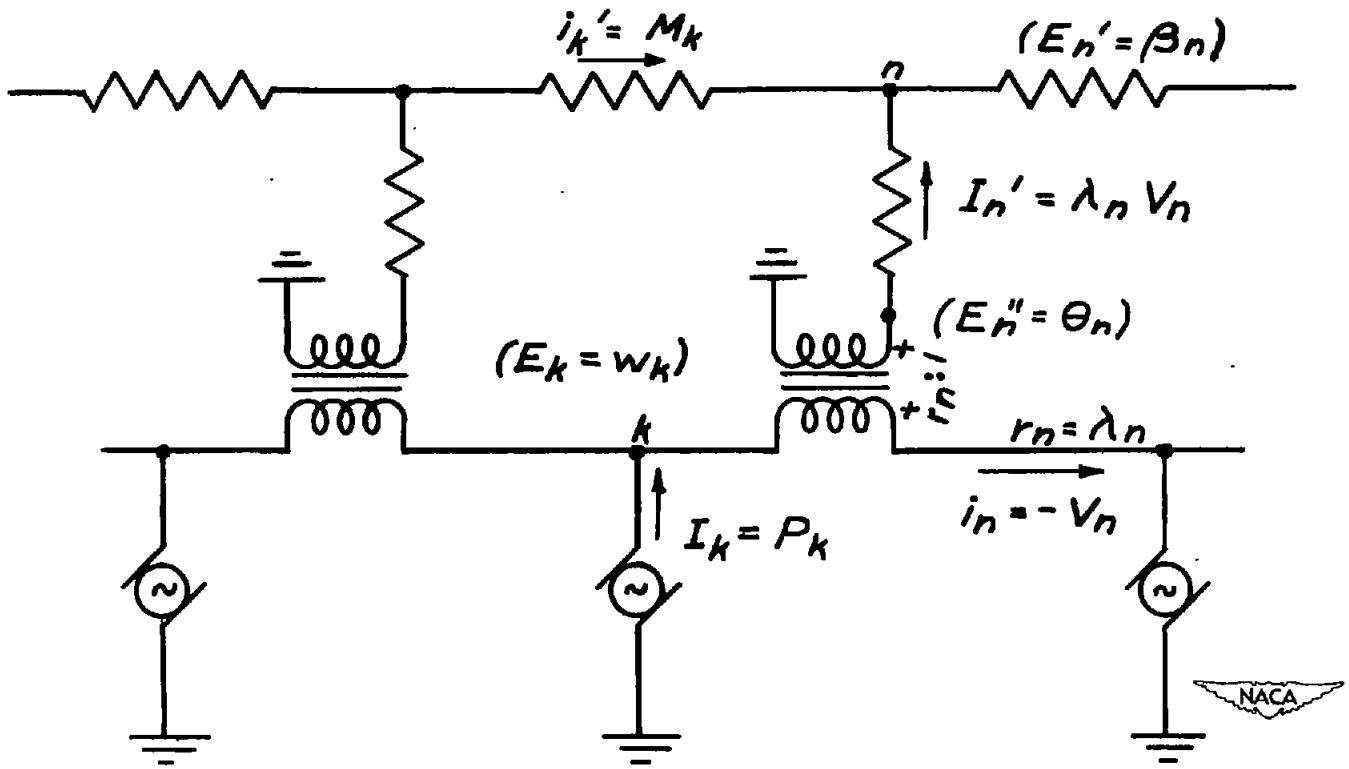

Figure 18.- Analogous circuit to give effect of shearing strains on bending deflections.

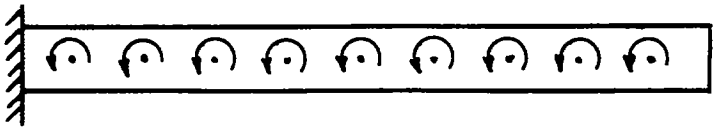

(a) Beam loaded with moment loads.

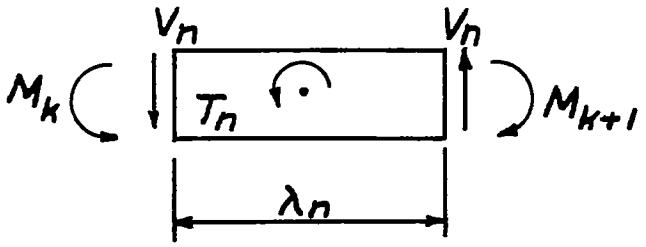

(b) nth bay of beam.

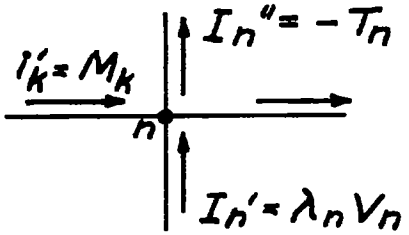

(c) nth node in moment circuit. $\Delta_n M_k = \lambda_n V_n + T_n$; $\Delta_n i_k' = I_n' - I_n''$.

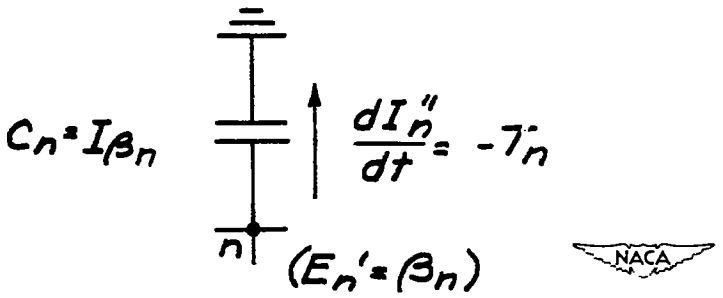

(d) Condenser element for rotary inertia.

$$T_n = -I_{\beta_n} \frac{d^2\beta_n}{dt^2}; \quad \frac{dI_n''}{dt} = C_n \frac{d^2E_n'}{dt^2}.$$

Figure 19.- Moment loads due to rotary inertia.

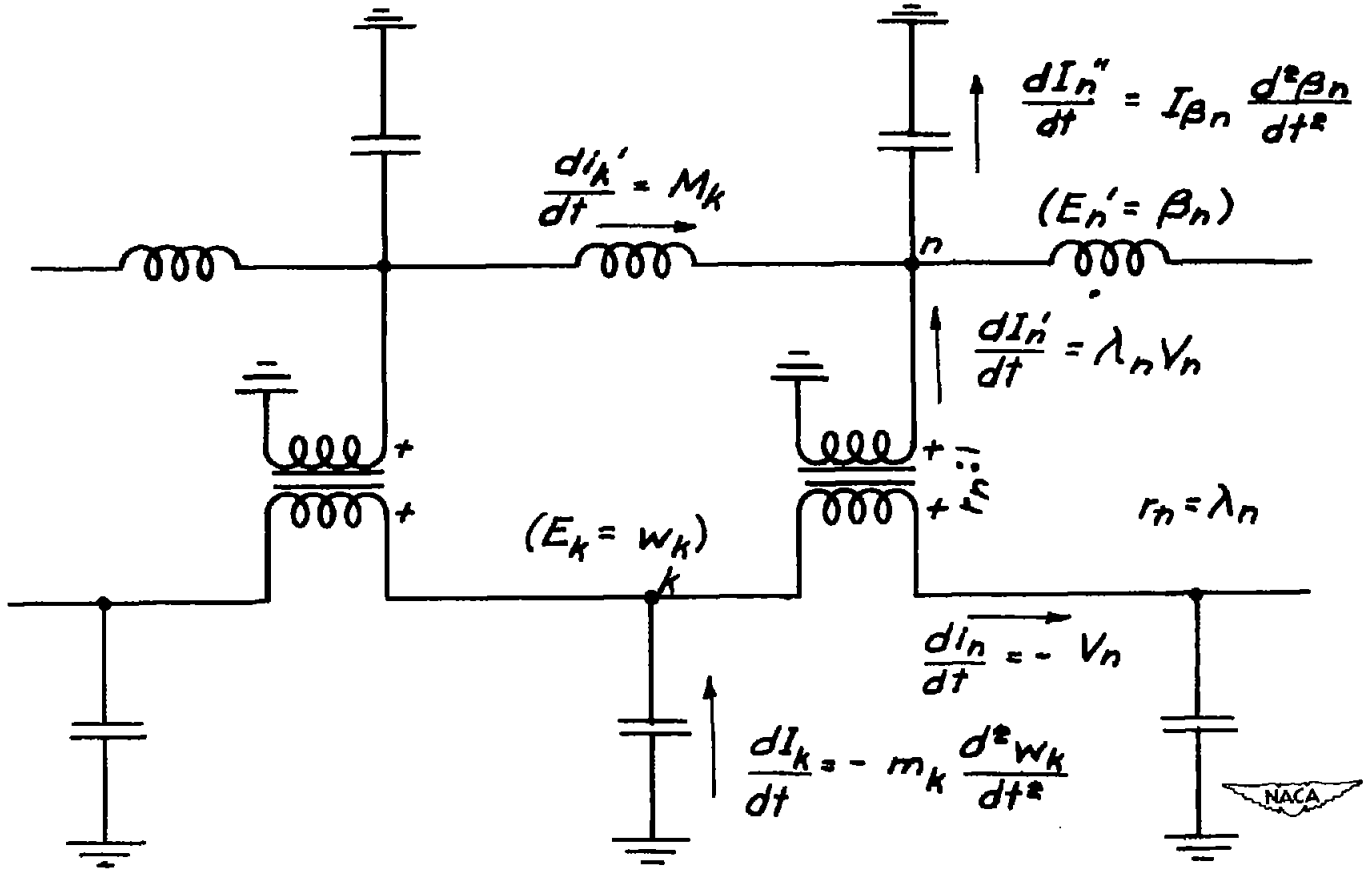

Figure 20.- Analogous circuit for bending vibration with rotary inertia.

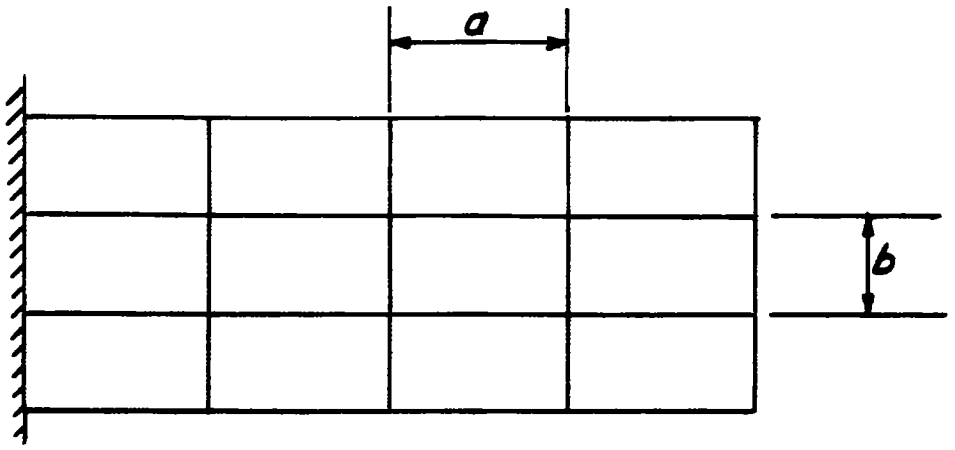

(a) Rectangular gridwork.

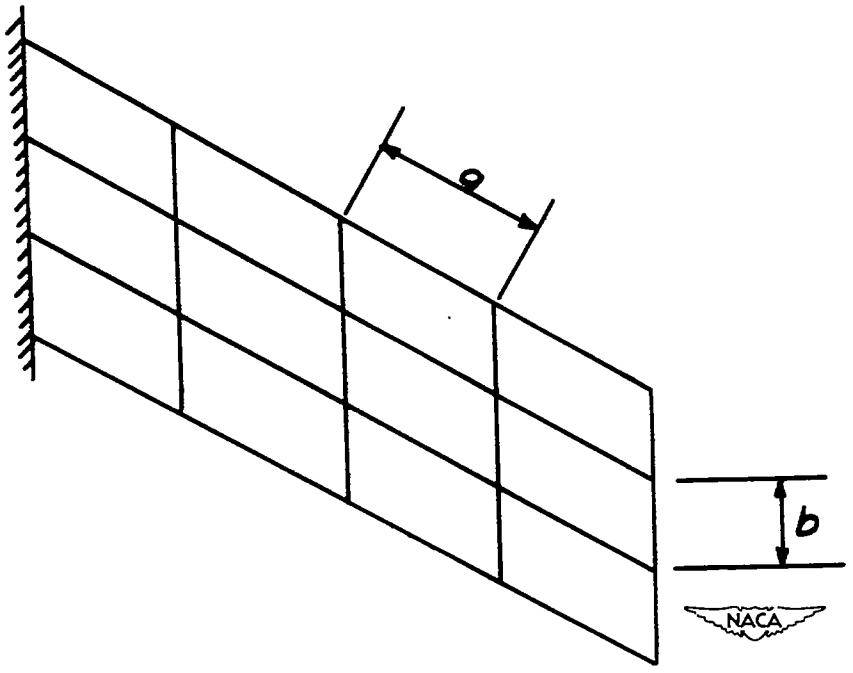

(b) Skewed gridwork

Figure 21.- Gridwork of spars and ribs.

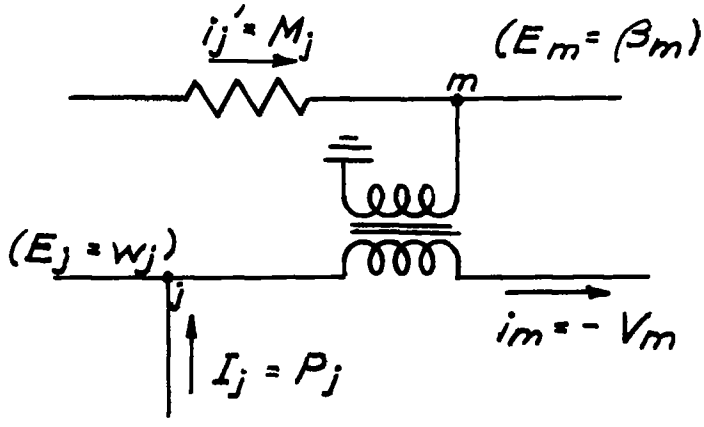

(a) One cell of circuit for kth rib.

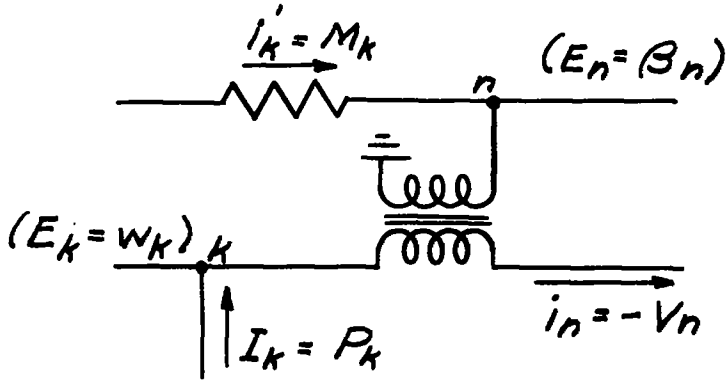

(b) One cell of circuit for jth spar.

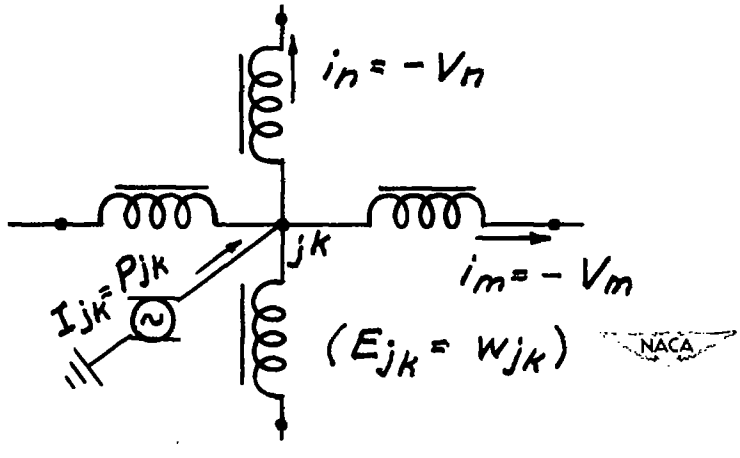

(c) Combined shear circuit.

Figure 22.- Analogous circuit for a gridwork.