3182
TN 2848
NATIONAL ADVISORY COMMITTEE
TECH LIBRARY KAI
0065882

3182
TN 2848
NATIONAL ADVISORY COMMITTEE
TECH LIBRARY KAI
0065882

1V

TECH LIBRARY KAFB, NM
0065882

NATIONAL ADVISORY COMMITTEE FOR AERONAUTICS

TECHNICAL NOTE 2848

INVESTIGATION OF SPONTANEOUS IGNITION TEMPERATURES OF ORGANIC COMPOUNDS WITH PARTICULAR EMPHASIS ON LUBRICANTS

By Charles E. Frank, Angus U. Blackham,
and Donald E. Swarts

SUMMARY

The study of spontaneous ignition characteristics of organic compounds has been continued with major emphasis on the various types of lubricating oils. The usefulness of the crucible apparatus previously described in NACA TN 2549 has been extended to these less-volatile materials by employing spray injection as well as dropwise addition of the liquid to the ignition chamber. It has been shown that certain relatively nonvolatile compounds previously considered to have relatively high spontaneous ignition temperatures actually exhibit fundamentally the same ease of ignition as their lower-molecular-weight homologues.

Examination of a variety of lubricants including paraffin oils, polyethylenes, polyethers, esters of dibasic acids, polypropylenes, and polyisobutylenes has given spontaneous ignition temperatures below approximately 400° C for all except the polyisobutylenes. The unique resistance of the polyisobutylene structure to spontaneous ignition apparently is due to its extremely high percentage of primary hydrogen atoms. Additional data also have been obtained on the influence of additives and metal surfaces on spontaneous ignition temperatures and on the ignition behavior of selected two-component mixtures.

INTRODUCTION

In previous work on this program (reference 1), spontaneous ignition temperatures were determined for some 50 pure organic compounds including paraffins, olefins, aromatic hydrocarbons, ethers, alcohols, and esters. Earlier observations regarding the effect of structure on the spontaneous ignition temperature were extended. The correlation observed between spontaneous ignition temperature and antiknock rating indicated the dependence of both phenomena on the same fundamental factors. A particularly important factor was shown to be the length of the uninterrupted hydrocarbon chain. The effects of a variety of additives and of selected metal surfaces on spontaneous ignition phenomena also were observed.

The present investigation had as its objective the continuation of the above program, with major emphasis on compounds of interest in the lubricant field. Such information is of particular importance since ignition of lubricants by hot surfaces is a major factor in the initiation of fires in aircraft. The work reported herein was done at the Applied Science Research Laboratory of the University of Cincinnati under the sponsorship and with the financial assistance of the National Advisory Committee for Aeronautics.

DESCRIPTION OF APPARATUS

The apparatus used in this investigation has been described in a previous report (reference 1). This comprised a heated metal block into which crucibles made of the various metals to be tested were inserted. Ignition temperatures were observed by dropping a small measured amount of fuel into the heated ignition chamber.

Dropwise addition of the material to the ignition chamber gave satisfactory results with compounds containing up to about 20 carbon atoms. However, with higher-molecular-weight materials, the rate of vaporization was too slow to yield meaningful results. Accordingly, it was found necessary to introduce such compounds as a fine spray. This was accomplished by employing the simple spray injector illustrated in figures 1 and 2. This apparatus comprises a hand-operated piston which ejects the liquid through a small opening from a cylinder of 0.125-inch diameter. The piston was accurately machined to fit the cylinder well. The most critical part of the design is that of the nozzle, since it is somewhat difficult to obtain the desired spray with a small quantity of a viscous oil. The nozzle illustrated performed well with 5-milligram portions of an SAE 30 oil. Results with liquids of higher viscosity were not satisfactory.

TEST PROCEDURES

Dropwise Addition

The procedure for determining spontaneous ignition temperatures by dropwise addition of the compound has been described in detail in reference 1. By this procedure, the charge size is varied at any given air-flow rate to yield a minimum temperature of spontaneous ignition. With most compounds, the air-flow rate then is reduced from 125 cubic centimeters per minute to 25 or 0 cubic centimeters per minute, and the spontaneous ignition temperatures are again determined with various charge sizes. In this way, the spontaneous ignition temperatures obtained

represent as nearly as possible optimum fuel-air ratios. In general, the results obtained at zero air flow have been the lowest and also have shown the best correlation with structure.

Spray Injection

In earlier work it had been observed that the spontaneous ignition temperatures (determined by dropwise addition) of the n-paraffins decrease with increasing molecular weight until about the range of C_{16}. Beyond this point a gradual rise in value occurred, presumably because of the reduced volatility of the compounds. This volatility effect was even more pronounced with the higher-molecular-weight lubricating oils examined in the present work. Thus, the observed spontaneous ignition temperatures of a homologous series of polyethers increased from 255° to 412° C in progressing from a viscosity of 55 to one of 5100 Saybolt Universal seconds (table I). In view of these results, attention was directed to the spray injection of compounds of low volatility as a means of extending the useful range of the determination.

The general procedure was the same as that employed in the dropwise addition. Here also the charge size was varied to cover as large a range of fuel-air ratios as possible. In this respect, the spray-injection procedure is not capable of quite so precise control as the dropwise addition from a hypodermic syringe. The syringe is capable of additions as small as 2 milligrams, while the lowest limit of the spray injector is about 5 milligrams. Among the compounds tested, this limitation on the range of fuel-air ratios obtainable has had no appreciable effect on the observed spontaneous ignition temperatures, while the spray-injection procedure does extend the usefulness of the determination very markedly. Thus, the spontaneous ignition temperatures of certain of the oils were dropped by as much as 100° C. That the effect of the spray injection is simply one of increasing the fuel-air ratio with these compounds is indicated by the fact that, with representative volatile materials, dropwise addition and spray injection gave substantially the same results (see table in the section "Comparison of Dropwise-Addition and Spray-Injection Procedures").

PRECISION

The precision of the crucible method of determining spontaneous ignition temperatures depends upon the temperature range of the ignition and upon the viscosity and volatility of the compound. Certain of these

dependencies have been indicated earlier (reference 1). A more complete picture of this variation in precision is as follows:

Properties of compound		Method of addition	Precision (°C)
Boiling point (°C)	Spontaneous ignition temperature (°C)		
<280	<300	Dropwise	1 - 2
<280	>300	------do-------	3 - 5
>280	<300	Spray injection	2 - 3
>280	>300	------do-------	3 - 6

The upper molecular-weight limit of usefulness of the spray-injection procedure has not been determined. No doubt, the absolute limits will be dependent on the vapor pressure of very small droplets. However, in the present equipment, the practical limit is determined by the viscosities and lies in the range of 300 to 600 Saybolt Universal seconds at 37.8° C, dependent to some extent on the structure involved. Use of a high-pressure injector could no doubt extend the usefulness of the method to still higher molecular weights. However, no work along those lines has been done, since the present equipment has fulfilled its purpose: A sufficient separation of the effects of structure and molecular weight to demonstrate that the ignition characteristics of a particular structure extend with little change from the simple, volatile molecules to the higher-molecular-weight oils.

RESULTS AND DISCUSSION

Spontaneous Ignition Temperatures of Various Types of Lubricants

The determination of spontaneous ignition temperatures for the various lubricating oils was less precise than in the case of the simple, volatile molecules which have been studied previously. This was, of course, the result of the higher-molecular-weight molecules involved and the correspondingly reduced vapor pressure and increased viscosity. As measured by dropwise addition, the ignition characteristics of the simple molecules showed a consistent correlation with structure, while those of the lubricants showed a progressive increase with molecular weight. Initial efforts to overcome this deficiency in the method included the

use of an open cup at zero air-flow rate to attempt to build up a sufficient vapor concentration of the fuel; however, values obtained by this method also were not consistent (see especially tables I and II).

From both a practical and theoretical viewpoint, it appeared desirable to employ a spray injection as a means of overcoming so far as possible the physical limitations of the dropwise addition. Such a procedure more nearly duplicates an actual flying hazard, for example, the spraying of oil from a punctured line on a hot surface; furthermore, by eliminating as much as possible the effect of vapor pressure, correlation with structure can be extended to these higher-molecular-weight compounds. It is known that the spontaneous ignition temperatures, determined by dropwise addition, frequently fail to correlate with actual performance tests. It is hoped that the spray-injection procedure may largely eliminate this difficulty.

Polyisobutylenes and hydrogenated polyisobutylenes.- The high spontaneous ignition temperatures of diisobutylene and related products (see table III) suggested the evaluation of the higher polyisobutylenes and their hydrogenation products. The diisobutylenes and triisobutylenes were prepared by the sulfuric-acid dehydration and polymerization of *tert*-butyl alcohol (references 2 and 3); tetraisobutylene was prepared by the boron-trifluoride-catalyzed dimerization of diisobutylene (reference 4). The 1,1-dineopentylethylene was obtained by the permanganate oxidation of triisobutylene (reference 5). The higher polymers were prepared by the boron-trifluoride-catalyzed polymerization of isobutylene (reference 4). Hydrogenation of these products was accomplished over Raney nickel catalyst at about 180° C. A liquid copolymer of isobutylene and styrene (boron-trifluoride catalyst) also was prepared. The spontaneous ignition characteristics of these products are summarized in table III and figure 3; other properties are listed in table IV.

The spontaneous ignition temperatures of these products were first determined by the usual (dropwise-addition) procedure. While some slight variation with molecular weight was observed, the values in all cases indicate an exceptionally high resistance to spontaneous ignition. Little change was noted in those cases where the spray-injection procedure was employed as a check on the dropwise addition. This is in marked contrast to all other structures studied; in all other cases, the higher-molecular-weight products, which gave high values by the dropwise addition, gave much lower values by the spray injection. It is of interest that hydrogenation of diisobutylenes and polyisobutylenes generally raised the spontaneous ignition temperature by from 30° to 60° C. This is an additional example of the correlation between spontaneous ignition behavior and octane rating, where certain highly branched olefins have been observed to give lower ratings than the corresponding paraffins (reference 6). With straight-chain α-olefins, the reverse situation holds for both measurements (references 1 and 6).

The ignition characteristics of these products can be appreciated better by comparison with those of the other lubricants listed in tables I and II and the next four tables appearing in the text. The polyisobutylenes leave substantially no residue in contrast to the conventional paraffinic lubricating oils; in their clean-burning characteristics they appear superior even to polyether lubricants. In viscosity, the products examined ranged from 22 to 7000 Saybolt Universal seconds at 37.8° C (table IV). While the polyisobutylenes are reported to be deficient in lubricity (reference 7) and in thermal stability (reference 8), the present findings suggest they merit further investigation. Additives would be capable of improving the lubricity and, unless very large, decomposition losses could be replaced. Another possibility not yet explored is the blending of polyisobutylenes with other lubricants. Basis for this is in the results obtained with mixtures of dodecane and 1,1-dineopentylethane (see the section "Spontaneous Ignition Temperatures of Mixtures and Effects of Additives" and fig. 9); such blends, particularly with di-p-tolylamine additive, showed spontaneous ignition characteristics vastly superior to those of dodecane itself.

Surprisingly, the copolymer of styrene and isobutylene had a lower spontaneous ignition temperature than the spontaneous ignition temperatures of the polyisobutylene oils. Thus, while simple aromatic hydrocarbons have high spontaneous ignition temperatures, the incorporation of aromatic rings into a complex branched-chain molecule in this case results in a slight decrease in the ignition temperature. It appears likely that this decrease results from a higher proportion of secondary hydrogens in the copolymer than in the polyisobutylene structure (see subsequent discussion in this section under "Summary").

Indoils.- It was of interest to compare the spontaneous ignition behavior of a commercial polybutylene with that of the pure polyisobutylenes synthesized in the Applied Science Research Laboratory. It was hoped that the isobutylene content of such a product might be sufficient to impart similarly high ignition temperatures. The material selected was Indoil L-10, obtained from the Standard Oil Co. (Ind.). This material does not exhibit the high resistance to spontaneous ignition characteristic of polyisobutylene. For this reason, it is presumed to contain a sufficiently high percentage of 1- and 2-butene units to overshadow the effect of the isobutylene structure; it also is possible that different conditions of polymerization may bring about varying degrees of isomerization and, accordingly, different ratios of primary to secondary to tertiary hydrogen atoms. Fractionation of the Indoil into several molecular-weight ranges yielded products having substantially the same spontaneous ignition characteristics as the original product. In these molecular-weight ranges, little difference was observed between the dropwise-addition and spray-injection procedures. These results are summarized in the following table:

Product	Boiling range		Refractive index, n_D^{25}	Spontaneous ignition temperature (°C)		
	Temperature (°C)	Pressure (mm of Hg)		Dropwise addition and air flow (cm^3/min) of -		Spray injection and air flow of 125 cm^3/min
				125	0	
Original	--------	--	1.4627	293	288	290
Fraction 1	69-91	2	1.4480	301	278	---
Fraction 2	125-138	2	1.4581	295	269	---

Polypropylenes:- The exceptionally high spontaneous ignition temperatures of the polyisobutylenes suggested the examination of other highly branched structures. The simplest of these, the polypropylenes, were prepared from propylene by polymerization with a boron-trifluoride and phosphoric-acid catalyst; a laboratory sample also was supplied by the Shell Development Co. through the courtesy of Dr. R. G. Larsen. Fractional distillation of both products yielded similar fractions having substantially the same properties.

The spontaneous ignition temperatures of all but one of these products were in the low-temperature range (below approx. 300° C), both by the dropwise-addition and spray-injection procedures. These results are summarized in the following table:

Product	Boiling range		Refractive index		Spontaneous ignition temperature (°C)		
	Temperature (°C)	Pressure (mm of Hg)	n_D^{25}	n_D^{20} (a)	Dropwise addition and air flow (cm^3/min) of - 125	0	Spray ignition and air flow of 125 cm^3/min
Trimer[b]	34.5-38	16	1.4202	1.4215	298	290	---
Tetramer[b]							
Fraction 1	35-45	1.5	1.4358	1.4379	288	284	---
Fraction 2	45-60	1.5	1.4390		287	275	---
Residue	>60	1.5	1.4603	------	308	298	---
Pentamer[c]	122-137	20	1.4444	------	274 [d]266	266 [d]254	---
Hydrogenated tetramer[c]	89-90	20	1.4229	------	385 [d]250	--- ---	--- ---
Hydrogenated pentamer[c]	126-131	20	1.4344	------	273 [d]228	258 [d]220	272 [d]230

[a]Data taken from reference 9.

[b]Samples obtained from Shell Development Co.

[c]Samples prepared at this laboratory.

[d]Values indicate smoke pulse ignition.

A comparison of the polypropylene and polyisobutylene chains (table V) brings out the fundamental reason for the difference between compounds exhibiting high- and low-temperature ignition behavior. Interruption in the hydrocarbon chain is a necessary but not a sufficient requirement for high-temperature ignition; more basically, the requirement is a very large proportion of primary hydrogen atoms. The importance of the relative reaction rates of primary, secondary, and tertiary hydrogen atoms has been pointed out by Boord (references 10 and 11) in connection with engine performance of the various hydrocarbons. The present data are further evidence for the fundamental relationship between spontaneous ignition temperature and engine performance and for the important differences between the vulnerability of the several types of carbon-hydrogen bonds.

Polyethylenes.- Three German polyethylene oils were supplied us by the Naval Research Laboratory through the courtesy of Dr. W. A. Zisman. These products have a partially branched structure as indicated in table V. As expected from the large proportion of secondary and tertiary hydrogen atoms, the products showed substantially the same ignition behavior as the polypropylenes or n-paraffin lubricants. With increase in molecular weight, ignition became more difficult, simply because of the reduced vapor pressure and increased viscosity. In all cases, a heavy tarlike residue remained after ignition. These results, using the dropwise-addition procedure, are summarized below.

German oil	Spontaneous ignition temperature at air flow of 125 cm^3/min (°C)		Remarks
	Closed cup	Open cup	
V-120	245	---	Heavy black tarlike residue
SS 903	388	390	
SS 906	420	---	

Paraffin lubricants.- As determined by dropwise addition, the spontaneous ignition temperatures of the conventional lubricating oils fell in the range of 260° to 400° C, the temperature increasing with increased viscosity and reduced volatility. Spray injection lowered the observed ignition temperature of the SAE 20 and 30 oils by 98° and 99° C, respectively, bringing them down to the range of the SAE 10 oil. The SAE 40 oil was too viscous to respond satisfactorily to the spray injection employed; however, even in this instance the temperature was lowered more than 50° C. Bardahl, which presumably contains more extreme-pressure additives, behaved like the corresponding weight of regular oil. An aircraft oil 1120-ANO-8 (for reciprocating engines) similarly showed the

behavior expected of this viscosity range. All these products except Bardahl gave heavy, tarlike residues on ignition. These results are summarized in the following table and in figure 4.

Lubricant	Spontaneous ignition temperature at air flow of 125 cm^3/min (°C)			Remarks
	Dropwise addition		Spray injection	
	Closed cup	Open cup		
All State Motor Oil, SAE 10	262	335	259	Heavy black tarlike residue
All State Motor Oil, SAE 20	372	345	274	
All State Motor Oil, SAE 30	385	355	286	
			[a]274	
All State Motor Oil, SAE 40	403	365	347	
Bardahl, SAE 10	272	---	---	Very fine brown sand-like residue
Reciprocating engine oil 1120-ANO-8	395	375	---	Heavy black tarlike residue

[a]Value indicates smoke pulse ignition.

Polyethers.- In view of the importance of the polyethers in the synthetic-lubricant field, a considerable number of these have been tested; these included both the Ucons (Carbide and Carbon Chemicals Corp.) and the polyglycols (Dow Chemical Co.). By the procedure employing dropwise addition, the spontaneous ignition temperatures increased with increasing molecular weight, ranging from 240° C for the low-viscosity products to about 400° C for those of the higher viscosity. First attempts to minimize the volatility factor included the use of very large charges (100 to 200 mg) in order to obtain as high a fuel-air ratio as possible; in addition, ignitions were conducted with the lid of the ignition chamber removed (open cup) in the hope of thereby obtaining more nearly optimum fuel concentrations. These results generally (but not always) were somewhat lower than those obtained in the closed cup, but the difference was not large or consistent. Attention was then devoted to the spray-injection technique. As with other types of compounds exhibiting this change in ignition temperature with molecular weight, values determined by spray injection differed little in the low-molecular-weight range, were much lower in the intermediate-molecular-weight range, and were appreciably lower in the high-molecular-weight range than those determined by dropwise addition. These results are summarized in tables I and II, and in figures 5 and 6.

The polyether lubricants in general have given higher spontaneous ignition temperatures than the paraffins. However, under certain conditions they do ignite at low temperatures; apparently, the less easy ignition of the polyethers results from more critical fuel-air-ratio requirements. By dropwise addition only the lowest-molecular-weight products ignited below 300° C. Spray injection extended the number of products showing low-temperature ignition into a higher-molecular-weight range.

A marked advantage of the polyethers over the n-paraffins is their small ignition residue. Those igniting in the low-temperature range left a relatively slight, lacquerlike deposit; those in the intermediate range left a dark residue which gradually disappeared; those igniting at high temperatures burned cleanly. This is believed to be the result of the ignition temperature itself rather than of any structural differences in the three product ranges.

Diesters.- Like the polyethers, the diesters have been found to be resistant to spontaneous ignition in the low-temperature range as indicated by dropwise addition (references 1 and 12). As with the polyethers, it has now been found that these compounds do undergo spontaneous ignition in the low-temperature range, but that the required fuel-air ratio is rather critical and, accordingly, easily missed. This was first observed in constructing a family of ignition curves for cetane and di(2-ethylhexyl) adipate mixtures (fig. 7). It was found that by employing a large charge (100 mg) added dropwise di(2-ethylhexyl) adipate exhibited a narrow ignition zone between 262° and 286° C.

By use of spray injection, this value was confirmed and, in addition, the nonignition zone was completely erased. This is a most striking example of the effect of fuel-air ratio on the spontaneous ignition temperature and of the importance of defining conditions under which any such value is determined. It is, of course, apparent why compounds such as the diesters, which have appeared to possess high spontaneous ignition temperatures, actually have been observed to ignite under conditions no more severe than those required for the paraffin lubricants. An additional diester, di(1-ethylpropyl) sebacate, was tested by the spray-injection procedure; in this case, the spontaneous ignition temperature was lowered from the previous value of 410° C (reference 1) to 248° C (smoke pulse ignition). The diesters have much to recommend them as synthetic lubricants (references 8 and 12); however, it appears they can no longer be considered to possess the freedom from low-temperature ignition as previously assumed.

Summary.- Table V summarizes the spontaneous ignition data obtained on the various lubricants examined and attempts to correlate this data with the fundamental structural units. As shown in that table, the polyisobutylenes and their saturated analogs were the only compounds tested which possessed high spontaneous ignition temperatures throughout both

the high- and low-molecular-weight ranges. This behavior is explained on the basis of the relative number of primary, secondary, and tertiary hydrogens in these various structures. Thus, the most probable structure of a polyisobutylene (see reference 4) contains no tertiary hydrogens and only about 20 percent secondary hydrogens, while the other structures listed contain from 50 to almost 100 percent secondary and tertiary hydrogens. As pointed out by Boord (references 10 and 11) the relative oxidation rates of hydrocarbons may be correlated with the reactivities of their hydrogen atoms, the reactivities in decreasing order being tertiary, secondary, and primary. Other groupings, such as the ether and ester, may introduce further complications which cannot be properly evaluated at this time. However, it is believed that in these higher-molecular-weight materials, such effects generally are overshadowed by the primary importance of the carbon-hydrogen linkage; this should be so particularly in those instances where hydrocarbon chains comprise the major fraction of the molecule.

Some additional speculation may be warranted regarding the nature of the ignition residue deposited by these various lubricants as related to their possible intermediate oxidation products. The polyisobutylenes would be expected to yield mainly acetone and formaldehyde (reference 13). All except the polyisobutylenes would be expected to yield other aldehyde intermediates in addition to formaldehyde; all except the polyisobutylenes also deposit lacquer residues. Those lacquers from the polyethers should possess higher oxygen contents and more alpha positions reactive to further attack; either this situation or an easier pyrolysis may explain the readiness with which these residues disappear.

Spontaneous Ignition Temperatures of Pure Compounds

Comparison of dropwise-addition and spray-injection procedures.- In the determination of spontaneous ignition temperatures of pure, volatile compounds by dropwise addition, every effort was made to secure the minimum temperature in the particular apparatus employed (reference 1). With increasing molecular weights, the usefulness of this procedure diminished and, as already described, spray injection was employed to extend the usefulness of the general method. If the effect of spray injection is purely one of overcoming vapor-pressure limitations then, with the readily vaporized compounds, the dropwise and spray procedures should give identical results. Accordingly, it was important to check this situation on a number of representative volatile compounds.

These results are summarized in the following table.

Compound	Spontaneous ignition temperature at air flow of 125 cm^3/min (°C)	
	Dropwise addition	Spray injection
Hexadecane	232	230
Dodecanol-1	283	278
Di(2-ethylhexyl) adipate	262	260
	[a]288 - 380	(b)
Di-n-octyl ether	210	208

[a]Nonignition zone.

[b]No nonignition zone.

While results are not identical, they are close enough to demonstrate the validity of the assumption. The slightly lower results obtained by the spray-injection procedure are consistent with the fact that all these compounds lie near the upper limit of precision for dropwise addition.

Spontaneous ignition temperatures of some additional pure compounds.- The first report on this study (reference 1) was devoted mainly to the determination of spontaneous ignition temperatures of representative compounds. Similar information on some additional compounds in a high state of purity is reported in the two following tables. Values are given for air flow rates of 0 and 125 cubic centimeters per minute, employing the dropwise-addition procedure.

Samples of 7-phenyltridecane and 7-cyclohexyltridecane were supplied through the courtesy of Dr. Robert Schiessler of the American Petroleum Institute Project 42 at Pennsylvania State College. As shown below,

Compound	Spontaneous ignition temperature (°C) at air flow (cm^3/min) of -	
	125	0
Di(2-ethylhexyl)-o-phthalate	395	400
Di(2-ethylhexyl)-m-phthalate	407	413
Di(2-ethylhexyl)-p-phthalate	414	418
7-Phenyltridecane	239	236
7-Cyclohexyltridecane	237	234

there is hardly any difference between the spontaneous ignition temperature of these compounds, which might appear surprising in view of the large differences between simple aromatic and naphthenic hydrocarbons.

With these compounds, however, the uninterrupted polymethylene chains completely dominate the spontaneous ignition behavior; both values are very close to those of the n-paraffin itself. The diesters examined were supplied through the courtesy of Dr. W. A. Zisman of the Naval Research Laboratory. The spontaneous ignition temperatures of this series fall in the same descending order as that observed earlier for the xylenes, that is, para, meta, and ortho. The differences, however, are much smaller than in the case of the xylenes; it seems reasonable that the presence of identical and sizable alkyl groups in all three compounds should largely level out any effects of the ortho, meta, and para positions. The spontaneous ignition temperatures at the zero air-flow rate were slightly higher than those at the rate of 125 cubic centimeters per minute, which is the reverse of the situation usually observed. These values have not been checked by the spray-injection procedure.

Three highly branched nonanes were supplied through the courtesy of the NACA. All these showed the high spontaneous ignition temperatures to be expected of highly branched compounds. Of more interest, however, is that their values fall in line with the general thesis that in ease of oxidative attack tertiary hydrogens rank first, secondary, second, and primary, last (see the section "Spontaneous Ignition Temperatures of Various Types of Lubricants"). This is illustrated in the following table. At a high air-flow rate, the differences between these isomers were

Compound	Number of hydrogens			Spontaneous ignition temperature (°C) at air flow (cm^3/min) of -		Spontaneous ignition temperature from reference 14 (°C)
	Primary	Secondary	Tertiary	125	0	
C C | | C-C-C-C-C | | C C	18	2	0	516	505	452
C C C | | | C-C-C-C-C | C	18	0	2	514	497	437
C-C-C-C-C | | | C C C | C	15	2	3	510	472	390

largely obliterated; at zero air flow, when more nearly optimum fuel-air ratios were obtained, these differences were quite marked. Values such as these suggest that standardization of the spontaneous ignition determination would permit the assignment of actual numerical values to the effect of various types of linkages on the ignition temperature; this is analogous to the treatment by Boord of other free-radical reaction data (references 10 and 11).

It should be noted that the values previously reported by Jackson (reference 14) fall in the same order as those obtained in the present investigation, but in a much lower temperature range. The major difference between the two procedures is Jackson's use of a 125-cubic-centimeter quartz flask and the use of a 43-cubic-centimeter stainless-steel cup in the present work. The higher values reported herein suggest that the larger surface-to-volume ratio (reference 15) and probably also the metal surface exert a pronounced chain-breaking action. The differences here are the largest found in comparing the spontaneous ignition temperatures obtained by these two different procedures; results obtained with compounds igniting in the low-temperature range are in fairly good agreement. Accordingly, it appears that the high-temperature reaction involving simple radical intermediates is more sensitive to wall effects than the low-temperature reaction involving peroxide intermediates (see reference 16).

The spontaneous ignition temperatures of the diisobutylenes, triisobutylenes, and tetraisobutylenes and the corresponding paraffins have been included in the discussion of polyisobutylenes and hydrogenated polyisobutylenes in the section "Spontaneous Ignition Temperatures of Various Types of Lubricants." The most striking observation here is that the paraffins possess considerably higher ignition temperatures than the corresponding olefins. This is contrary to the previous results obtained on linear olefins as compared with n-paraffins. Such a reversal of the effect of the double bond parallels the critical compression ratios of the corresponding types of compounds. Boord has noted that if the critical compression rate of the paraffin is high, the effect of unsaturation may be to lower its value (reference 11).

Effects of Additives on Spontaneous Ignition Temperatures

Some additional work has been conducted on the effects of certain additives on the spontaneous ignition temperatures of pure compounds and of mixtures. Of the compounds previously investigated in this program (reference 1), aromatic amines have been second only to tetraethyl lead in their effectiveness as spontaneous ignition inhibitors. These data further showed secondary amines to be more effective than primary or tertiary amines, and that methylation in the para position further increased activity. Accordingly, a sample of di-p-tolylamine was

synthesized and found to be more effective than the best previous candidate from this class, diphenylamine. A number of fire-extinguishing, halogen-containing compounds also were evaluated; in agreement with the earlier work, compounds of this type were found to be surprisingly ineffective as additives.

A summary of the effect of di-p-tolylamine on the spontaneous ign tion temperatures of a number of pure compounds is contained in table VI; all these data were obtained by the dropwise-addition procedure. Of these compounds, the n-paraffin showed the greatest susceptibility to inhibition and the n-alkyl ether, the least. Little additional generalization is possible, except that additive action, like other types of inhibition, varies widely with the types of structure involved.

In reference 1, a number of halogenated compounds were found to be completely ineffective as additives (5 mole percent) for raising the spontaneous ignition temperature of dodecane; these included carbon tetrachloride, 1,1,2-trichloroethane, chlorobenzene, and bromobenzene. However, in view of a recent literature review (reference 17) on the effectiveness of such compounds as fire-extinguishing agents, it was suggested that additional examples be investigated. Accordingly, tests have been carried out using 5 mole percent of the additive in dodecane and in 1,1-dineopentylethane. These results using the dropwise-addition procedure and an air-flow rate of 125 cubic centimeters per minute are summarized below.

5 Mole percent of additive	Spontaneous ignition temperature (°C)	
	In dodecane	In 1,1-dineopentylethane
None	232	498
Ethylene dibromide	234	468
Iodine	260	488
Phosphoryl chloride	233	490
Methylene bromide	234	460

In the low-temperature range (dodecane ignition) iodine was the only material showing any effectiveness in raising the spontaneous ignition temperature. In the high-temperature region, the halogenated compounds actually promoted glow or cool-flame ignition below the normal ignition value. In the case of 5 mole percent of ethylene dibromide in 1,1-dineopentylethane, the yellow-flame ignition persisted down to 480° C, and the blue-glow ignition, to 468° C. This is in marked contrast to the effect of di-p-tolylamine where no blue-glow ignition occurred. No satisfactory explanation has been obtained for the difference between these results and those of the fire-extinguishing tests. It was observed that the hydrocarbons under study here and methane, which

is one of the hydrocarbons commonly studied in fire-extinguishing tests, behaved quite differently in spontaneous ignition tests. This difference was observed qualitatively as shown in figure 8. In the apparatus used in the present investigation for determining spontaneous ignition, iodine was observed to raise the ignition temperature of methane substantially; that of dineopentylethane was lowered. It is significant that this lower region of ignition of the dineopentylethane is of the cool-flame type, indicating that the presence of iodine promotes a reaction mechanism which is not appreciable in its absence.

It should be noted that antiknock compounds (powerful inhibitors of slow oxidation reactions) have little value as fire-extinguishing agents and often are of a highly inflammable nature. As Fryburg has observed (reference 17), the free radicals liberated actually may accelerate the fast oxidation reactions occurring at high temperatures. Accordingly, it is perhaps to be expected that fire-extinguishing agents (which are active at high temperatures) may have little effect in small concentrations on the relatively low-temperature processes leading to ignition.

Spontaneous Ignition Temperatures of Mixtures and Effects of Additives

In reference 1, the spontaneous ignition characteristics of cetane and α-methylnaphthalene and heptane and isooctane mixtures were described. In each case, a plot of the spontaneous ignition boundary against composition of the mixture yielded an S-shaped curve showing an ignition peninsula in the low-temperature region and a zone of nonignition above this peninsula. As such curves shed considerable light on the behavior which may be expected of synthetic lubricant blends, further investigation has been made of the ignition characteristics of other representative mixtures.

Dodecane and 1,1-dineopentylethane mixtures.- Figure 9 shows the change in spontaneous ignition temperature with composition for various dodecane and dineopentylethane mixtures. In this figure, as in most of the work reported herein, the charge was varied as necessary to obtain the minimum spontaneous-ignition-temperature value for any given composition. In this manner it was possible to observe a projection of the boundaries of three different types of ignition, which also have been noted in reference 1: (1) A true flame - yellow, green, or blue in color, (2) a green-blue glow (cool flame), and (3) a definite smoke puff after a reasonable induction period.

The existence of these three different regions of ignition behavior is much more noticeable with mixtures of this type than with pure hydrocarbons. The full significance of these regions is not yet known, but

it is apparent that the smoke pulses and glow ignitions represent intermediate stages in the passage from the region of slow auto-oxidation to that of true flame ignition.

The effect of di-p-tolylamine on ignition behavior of the above blend of normal and branched paraffins then was determined. The results are plotted in figure 10. The flame ignition region has been pushed back to a remarkable extent, the low-temperature flame ignition peninsula being wiped out; the glow ignition region seems to have been eliminated also. Remaining in the low-temperature region is a rather narrow smoke pulse region. A significant feature of these data is that, whereas 5 mole percent of di-p-tolylamine raised minimum flame ignition temperature 80° C for dodecane and 8° C for 1,1-dineopentylethane, the rise was 190° C for a 50:50 mixture of the two paraffins.

Figure 11 shows the pronounced effect of 1 mole percent of tetraethyl lead on the spontaneous ignition temperatures of dodecane and 1,1-dineopentylethane blends. This effect increased as the dodecane content increased, thereby eliminating almost completely any variation with the ratio of dodecane to dineopentylethane. At first glance, this might appear at variance with the action of tetraethyl lead in motor tests, where the n-paraffins generally have a poorer lead response than the branched paraffins. However, motor tests represent ignition under pressure, where highly branched paraffins as well as n-paraffins can ignite in the low-temperature region. Under those conditions, tetraethyl lead apparently can raise the spontaneous ignition temperature of the branched paraffins into the high-temperature range. However, under those more severe conditions, it cannot be so effective with the n-paraffins as at atmospheric pressure.

Another interesting compound of potential value for the reduction of spontaneous flammability of lubricating oils is dilauryl selenide, supplied through the courtesy of Dr. W. A. Zisman of the Naval Research Laboratory. This compound in 1-mole-percent and in 5-mole-percent concentration in dodecane and 1,1-dineopentylethane mixtures gave results summarized in figure 12. At the zero air-flow rate and 1-mole-percent concentration, there was a small zone of ignition in the neighborhood of 290° C. Under the other conditions only smoke pulse ignitions were obtained in this low-temperature range for dodecane and dodecane-rich mixtures. At 5-mole-percent concentration the behavior was quite unusual, the spontaneous ignition temperature of dodecane being raised above that of dineopentylethane.

Cetane and di(2-ethylhexyl) adipate mixtures.- Figure 7 shows the change in spontaneous ignition temperature with composition for various cetane and di(2-ethylhexyl) adipate mixtures at four different fuel charges. These different fuel charges are roughly equivalent to four different fuel-air ratios, since the air flow remained fixed. From such

a family of curves it is possible to construct a three-dimensional figure with the fuel charge (roughly fuel-air ratio) as the third ordinate. As mentioned earlier, it was in the construction of this family of curves that the existence of a low-temperature ignition region for di(2-ethylhexyl) adipate first was observed.

The three-dimensional ignition-boundary surface indicated in figure 7 demonstrates most strikingly the importance of carefully defining the conditions under which a spontaneous ignition temperature is obtained. Further illustration of the importance of defining these conditions was obtained later, when it was found possible to eliminate completely the nonignition zone of di(2-ethylhexyl) adipate by employing the spray-injection procedure (see discussion of diesters in the section "Spontaneous Ignition Temperatures of Various Types of Lubricants").

It should be added that recognition of the various factors affecting the temperature at which a compound in mixture ignites does not detract from the value (for comparative purposes) of determining a single numerical value as the spontaneous ignition temperature. It is not always clear, however, under what set of conditions a given group of compounds best may be compared. This situation exists also in engine testing, where the performance ratings of two closely related compounds may be reversed with a change in testing procedure. For determining comparative spontaneous ignition temperatures, obtaining a minimum temperature is believed to be most useful; in this procedure, a range of fuel-air ratios is tested, and the lowest ignition observed is recorded as the spontaneous ignition temperature. The general correlation of such values with structure and with octane numbers and the good reproducibility between the dropwise and spray-injection procedures (for volatile compounds) are supporting evidence for this conclusion.

Effect of Metal Surfaces on Spontaneous Ignition Temperatures

Previous work (reference 1) showed that a change in the metal surface has substantially no effect on the spontaneous ignition temperatures of a number of hydrocarbons, alcohols, and ethers igniting in the low-temperature range (230° - 290° C). Some effect was observed with compounds igniting in the intermediate range, and there were indications that metal surfaces would show the greatest catalytic action on those compounds igniting at the higher temperatures. Six metals or alloys now have been tested for their catalytic action on the spontaneous ignition temperature of 1,1-dineopentylethane; results are summarized in the following table:

Metal	Spontaneous ignition temperature (°C) at air flow (cm^3/min) of -		Final conditions of metal surface
	125	0	
Copper	540	540	Heavy oxide coating (flakes)
Black iron	538	507	Dark oxide coating
Brass	510	494	Tarnished
Aluminum alloy	503	485	Dark grey surface
Inconel	502	482	Slightly tarnished
Stainless steel[1]	496	475	Do.

[1]Values were determined immediately after cup had been cleaned with fine emery cloth. Slightly higher values in table III were determined after a few preliminary runs, which seem to bring surface of cup to a condition more favorable for reproducible results.

The range of spontaneous ignition temperatures for the highly branched paraffin covered 44° C at an air-flow rate of 125 cubic centimeters per minute and 65° C at a zero air-flow rate (dropwise addition). It is perhaps significant that the temperature increased with the extent of oxidation of the metal surface. A possible explanation for this relation is that all these surfaces act as chain breakers and that the more surface exposed (as with the oxidative attack) the higher the temperature required to overcome this chain-breaking action and bring about ignition.

CONCLUSIONS

A study was made of the spontaneous ignition characteristics of various types of lubricants and the influence of additives and metal surfaces on spontaneous ignition temperatures and on the ignition behavior of selected two-component mixtures. From this investigation the following conclusions may be drawn:

1. The usefulness of the spontaneous ignition temperature determination has been extended to include lubricants of moderate viscosities by application of spray injection rather than dropwise addition. By this procedure, it has been shown that the same effects of structure on spontaneous ignition apply to the lubricant range of molecular weights as have been observed with the lower-molecular-weight, more-volatile compounds.

2. The most fundamental aspect of structure involved in spontaneous ignition is the number of primary, secondary, and tertiary hydrogen atoms. As observed in other free-radical reactions, the primary hydrogen atoms are the most resistant to attack. Thus, the polyisobutylene structure was the only one which gave consistently high spontaneous ignition temperatures (about 400° C) in all molecular-weight ranges. With this type olefin, hydrogenation increased the temperature of spontaneous ignition by an average of about 50° C. Other types of lubricants tested included the paraffins, polyethylenes, polypropylenes, ethylene glycol polyethers, propylene glycol polyethers, and the diesters.

3. Investigation of the spontaneous ignition characteristics of dodecane and 1,1-dineopentylethane and cetane and di(2-ethylhexyl) adipate mixtures yielded the characteristic S-shaped curves observed previously with other two-component mixtures. Determination of a family of such curves (charge size as the third ordinate) with the cetane and ester mixtures has shown the influence of fuel-air ratio on the determination.

4. Di-p-tolylamine was shown to possess outstanding effectiveness among the amine additives in raising the spontaneous ignition temperature of paraffins. Tetraethyl lead has a much greater effect, however, and dilauryl selenide also is superior to di-p-tolylamine. The specificity of additive action has been evidenced by the varying effects of di-p-tolylamine on a number of representative compounds. The halogen-containing fire-extinguishing agents have proved of little or no value as additives for raising the spontaneous ignition temperature.

5. The effects of various metal surfaces on the spontaneous ignition temperature of 1,1-dineopentylethane have been found to be larger than their effects on compounds igniting in the low-temperature range. It is suggested, but not yet demonstrated, that this is the result of the extent of the surface exposed (oxidative attack on the metal) rather than a specific action of the metal itself.

Applied Science Research Laboratory
University of Cincinnati
Cincinnati, Ohio, Jan. 31, 1952

REFERENCES

1. Frank, Charles E., and Blackham, Angus U.: Investigation of Hydrocarbon Ignition. NACA TN 2549, 1952.

2. Edgar, Graham: Measurement of Knock Characteristics of Gasoline in Terms of a Standard Fuel. Ind. and Eng. Chem., vol. 19, no. 1, Jan. 1927, pp. 145-146.

3. McCubbin, R. J.: The Oxidation of "Tri-Isobutylene" by Ozone. Jour. Am. Chem. Soc., vol. 53, no. 1, Jan. 1931, pp. 356-359.

4. Evans. A. G., and Meadows, G. W.: Polymerization of Isobutylene Catalyzed by Boron Trifluoride. Jour. Polymer Sci., vol. 4, no. 3, June 1949, pp. 359-376.

5. Bartlett, P. D., Fraser, G. L., and Woodward, R. B.: The Isolation and Properties of 1,1-Dineopentylethylene, a Component of Triisobutylene. Jour. Am. Chem. Soc., vol. 63, no. 2, Feb. 1941, pp. 495-498.

6. Lovell, Wheeler G.: Knocking Characteristics of Hydrocarbons. Ind. and Eng. Chem., vol. 40, no. 12, Dec. 1948, pp. 2388-2438.

7. Spaght, M. E.: German Aircraft Oils Made by Polymerization of Olefins. Petroleum Processing, vol. I, no. 2, Oct. 1946, pp. 126-135.

8. Larsen, R. G., and Bondi, A.: Functional Selection of Synthetic Lubricants. Ind. and Eng. Chem., vol. 42, no. 12, Dec. 1950, pp. 2421-2427.

9. Ipathieff, V.: Catalytic Polymerization of Gaseous Olefins by Liquid Phosphoric Acid. Ind. and Eng. Chem., vol. 27, no. 9, Sept. 1935, pp. 1067-1071.

10. Boord, Cecil E.: The Oxidation of Hydrocarbons. Third Symposium on Combustion, Flame and Explosion Phenomena. Williams & Wilkins Co. (Baltimore), 1949, pp. 416-430; discussion, pp. 430-432.

11. Boord, C. E., Greenlee, K. W., and Derfer, J. M.: Oxidation Reactions as Related to Hydrocarbon Structure and Engine Knock. Joint Symposium on Combustion Chemistry, Div. Petroleum Chem., Am. Chem. Soc. (Cleveland), April 9-12, 1951, pp. 171-191.

12. Bried, E. M., Kidder, H. F., Murphy, C. M., and Zisman, W. A.: Synthetic Lubricant Fluids from Branched-Chain Diesters. Ind. and Eng. Chem., vol. 39, no. 4, April 1947, pp. 484-491.

13. Lewis, Bernard, and Von Elbe, Guenther: Combustion, Flames and Explosions of Gases. Academic Press Inc. (New York), 1951, p. 185.

14. Jackson, Joseph L.: Spontaneous Ignition Temperatures of Pure Hydrocarbons and Commercial Fluids. NACA RM E50J10, 1950.

15. Spence, Kate, and Townend, D. T. A.: The Two-Stage Process in the Combustion of Higher Hydrocarbons and Their Derivatives. Third Symposium on Combustion, Flame and Explosion Phenomena, Williams & Wilkins Co. (Baltimore), 1949, pp. 404-414; discussion, pp. 414-415.

16. Mulcahy, M. F. R.: The Oxidation of Hydrocarbons. Trans. Faraday Soc., vol. XLV, pt. 6, June 1949, pp. 537-541.

17. Fryburg, George: Review of Literature Pertinent to Fire-Extinguishing Agents and to Basic Mechanisms Involved in Their Action. NACA TN 2102, 1950.

18. Murphy, C. M., and Saunders, C. E.: Analysis and Properties of German Synthetic Polyethylene Oils. Petroleum Refiner, vol. 26, no. 5, May 1947, pp. 479-484.

TABLE I

SPONTANEOUS IGNITION TEMPERATURES OF UCONS[1]

Lubricant	Spontaneous ignition temperature (°C)			Remarks
	Dropwise addition		Spray injection	
	Closed cup	Open cup		
LB 1800 X	412	355	---	No residue at 400° C but at 350° to 375° C a dark residue formed which slowly oxidized away
LB 1715	405	350	397	
LB 400 X	397	352	---	
LB 385	380	355	330	
LB 170 X	375	355	---	
LB 135	350	338	---	Lacquerlike residue
LB 70 X	240	(2)	216	
LB 65	280	(2)	210	
50 HB 5100	412	364	---	Residue at lower temperatures was black and lacquerlike
50 HB 280 X	400	355	---	
50 HB 260	376	358	321	
50 HB 100	350	348	253	
50 HB 55	255	(2)	235	
75 H 1400	410	≈375	---	
75 H 480	396	376	---	
DLB EHD 190 B	374	340	---	Lacquerlike residue
DLB 50 BX	325	(2)	---	----------
818	382	>378	---	Residue oxidized away
DLB 50 B	330	----	---	----------
DLB 100 B	352	----	---	----------

[1]Temperature using open cup taken at zero air flow; all others taken at air flow of 125 cm^3/min.

[2]Much higher values in open cup than in closed cup - no definite value determined.

TABLE II

SPONTANEOUS IGNITION TEMPERATURES OF POLYGLYCOLS[a]

Lubricant (b)	Spontaneous ignition temperature (°C)		Spray Injection
	Dropwise addition		
	Closed cup	Open cup	
15-200	414	406	---
P-2000	392	378	360
P-1200	375	352	---
P-750	370	345	---
P-400	355	318	250
E-600	400	400	---
E-400	384	384	---
E-300	368	365	---
E-200	350	---	---
	[c]270	---	---

[a]Temperatures using open cup taken at zero air flow; all others taken at air flow of 125 cm^3/min. Ignition residues similar to those for Ucons, see table I.

[b]P series, polypropylene glycols; E series, polyethylene glycols. Numbers indicate average molecular weight. Sample 15-200 is a polyglycol derivative.

[c]Below 350° C a zone of nonignition was observed; a small zone of low-temperature ignition then was found in the range from 270° to 280° C.

TABLE III

SPONTANEOUS IGNITION TEMPERATURES OF VARIOUS POLYISOBUTYLENES AND THEIR HYDROGENATED DERIVATIVES

Unsaturated				Saturated		
Compound	Spontaneous ignition temperature (°C)			Compound	Spontaneous ignition temperature (°C)	
	Dropwise addition and air flow (cm^3/min) of -		Spray injection and air flow of 125 cm^3/min		Dropwise addition and air flow (cm^3/min) of -	
	125	0			125	0
Diisobutylene	470	435	---	Isooctane	518	502
1,1-Dineopentylethylene	455	425	---	1,1-Dineopentylethane	500	486
Triisobutylene	413	408	413	Isododecane	500	485
Tetraisobutylene	415	402	---	Isohexadecane	484	460
Mixture[a]	436	392	---			
Higher polyisobutylenes:						
Original reaction product	390	348	---			
After precipitation of high-molecular-weight polyisobutylene with acetone	392	364	---			
Polyisobutylene distillate:						
[b]1 (<45)	392	355	---			
[b]2 (70 - 90)	400	370	398			
[b]3 (110 - 114)	403	366	---	3 hydrogenated	465	428
[b]4 (160 - 200)	403	380	---	4 hydrogenated	434	410
5 (residue)	412	400	---	5 hydrogenated	431	408
Styrene-isobutylene copolymer	376	335	---			

[a]Mixture contains 1 part diisobutylene, 5 parts triisobutylene, and 4 parts tetraisobutylene.

[b]Values in parentheses following fraction number of distillate are boiling ranges (°C) at 2 mm of Hg.

TABLE IV

REFRACTIVE INDEX, BOILING POINT, AND VISCOSITY DATA FOR

POLYISOBUTYLENES AND THEIR HYDROGENATED DERIVATIVES

Compound	Refractive index, n_D^{25}	Boiling range		Approximate viscosity at 37.8° C (SUS)
		Temperature (°C)	Pressure (mm of Hg)	
Diisobutylene	1.4073	101.5	740	----
Isooctane	1.3890	98.5	740	----
1,1-Dineopentylethylene	1.4271	177-178	740	----
1,1-Dineopentylethane	1.4169	177-177.5	740	----
Triisobutylene	1.4282	176-178	740	----
Isododecane	1.4170	177-178.5	740	----
Tetraisobutylene	1.4475	152-153.5	58	30
Isohexadecane	1.4370	118-119	15	28
Polyisobutylene distillate:				
1	1.4327	<45	2	22
2	1.4507	70-90	2	29
3	1.4612	110-114	2	50
4	1.4712	160-200	2	135
5	1.4894	200	2	7000
3 hydrogenated	1.4524	---------	---	50
4 hydrogenated	1.4638	---------	---	125
5 hydrogenated	1.4840	---------	---	3000
Styrene-isobutylene copolymer	-----	---------	---	370

TABLE V

SUMMARY OF SPONTANEOUS IGNITION BEHAVIOR OF VARIOUS LUBRICANTS

Major structural unit	Probable type of hydrogens present	Ignition residue	Spontaneous ignition temperature		
			Dropwise addition		Spray injection
			Below 100 SUS at 37.8° C	Above 500 SUS at 37.8° C	Below 300 SUS at 37.8° C
n-Paraffin $-(CH_2)_n-$	80 to 90 percent secondary	Heavy lacquer	Low	High	Low
Polyethylene[1] $-(CH_2-CH_2)_x-\left(\begin{matrix}H\\ \vert\\ C\\ \vert\\ CH_3\end{matrix}\right)_y-$	Perhaps 70 percent secondary and tertiary	Heavy lacquer	Low	High	Low
Polypropylene $-\left(CH_2-\underset{\underset{CH_3}{\vert}}{CH}\right)_n-$	About 50 percent secondary and tertiary	Heavy lacquer	Low	High	Low
Polyisobutylene[2] $-\left(CH_2-\overset{\overset{CH_3}{\vert}}{\underset{\underset{CH_3}{\vert}}{C}}\right)_n-$	About 80 percent primary; no tertiary	None	High	High	High
Polyethylene glycol $-(CH_2-CH_2-O)_n-$	Almost 100 percent secondary	Lacquer; burns away	Low	High	Low
Polypropylene glycol $-\left(CH_2-\underset{\underset{CH_3}{\vert}}{CH}-O\right)_n-$	50 percent secondary and tertiary	Lacquer; burns away	Low	High	Low
Diesters: Di(2-Ethylhexyl) adipate Di(1-Ethylpropyl) sebacate	About 70 percent secondary and tertiary	Lacquer	Low	----	Low

[1]Information obtained from reference 18.

[2]Information obtained from reference 4.

TABLE VI

EFFECT OF DI-p-TOLYLAMINE ON SPONTANEOUS IGNITION TEMPERATURES

OF VARIOUS ORGANIC COMPOUNDS (DROPWISE ADDITION)

(a) At air flow of 125 cubic centimeters per minute

———— 5 mole percent of di-p-tolylamine

– – – – – – 2 mole percent of di-p-tolylamine

Compound	Temperature change (°C)		Spontaneous ignition temperature (°C)		
			Pure compound	With additive (mole percent)	
				2	5
Dodecane	81 25		239	263	320
Dodecene-1	42 11		257	268	299
1,1-Dineopentyl ethane	14 10		500	510	514
1,1-Dineopentyl ethylene	33 12		455	467	488
n-Dodecanol-1	45 15		283	298	328
n-Hexyl ether	16 6		196	202	212

(b) At zero air flow

Compound	Temperature change (°C)		Spontaneous ignition temperature (°C)		
			Pure compound	With additive (mole percent)	
				2	5
Dodecane	55 17		233	250	288
Dodecene-1	28 13		252	265	280
1,1-Dineopentyl ethane	26 24		486	510	512
1,1-Dineopentyl ethylene	45 33		425	458	470
n-Dodecanol-1	32 10		278	288	310
n-Hexyl ether	9 6		196	202	205

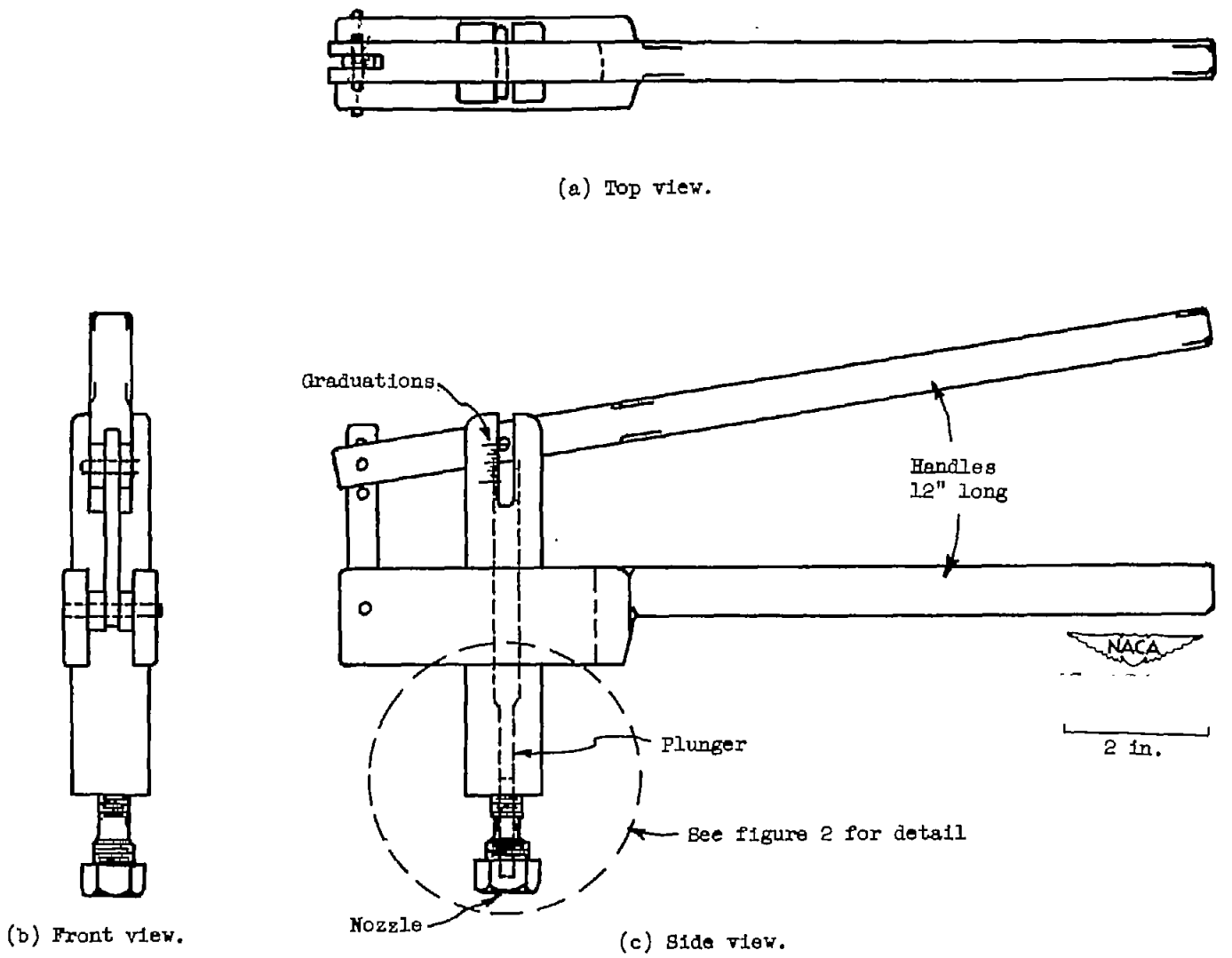

(a) Top view.

(b) Front view.

(c) Side view.

Figure 1.- Spray-injector apparatus (assembly).

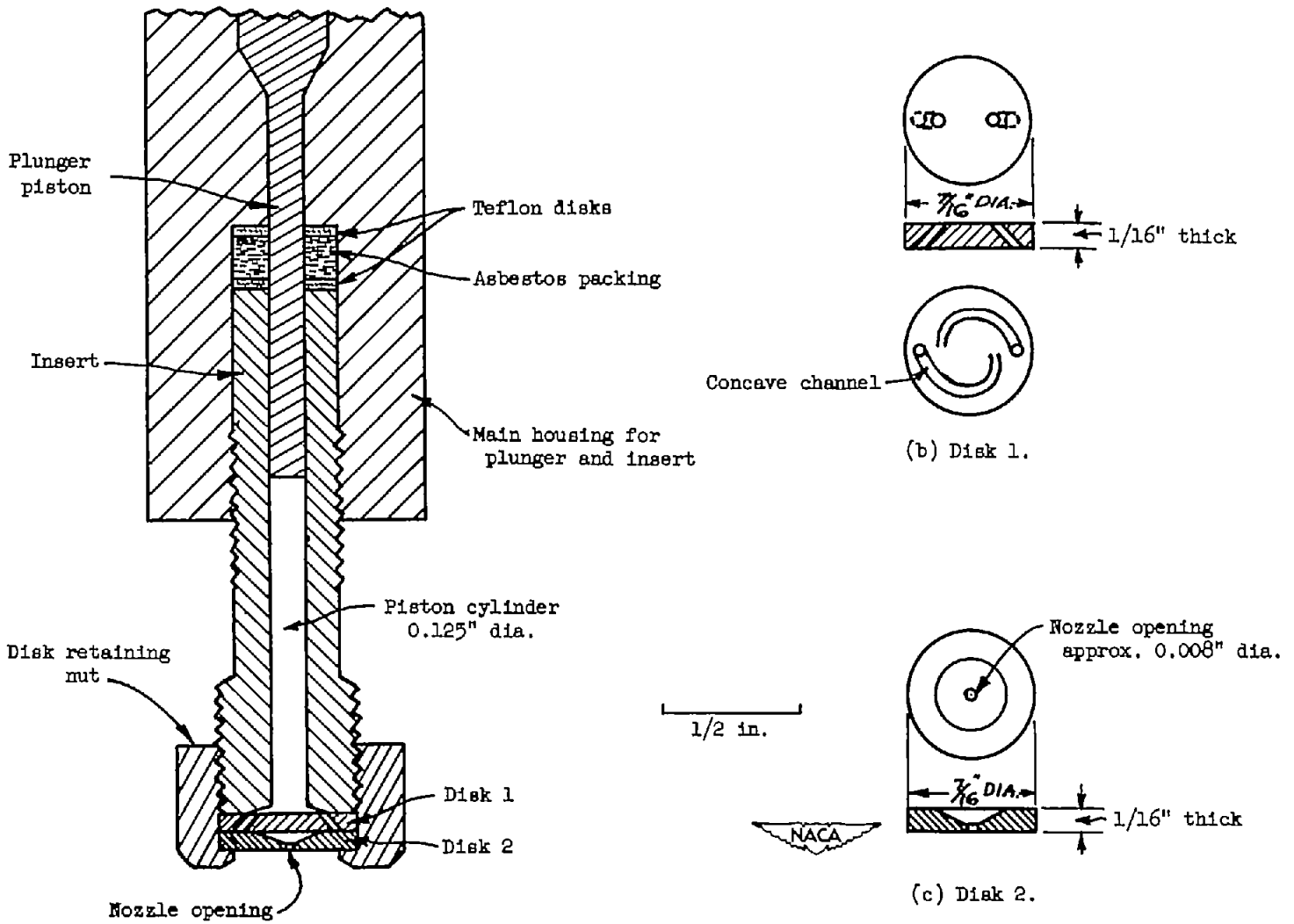

(a) Assembly.

(b) Disk 1.

(c) Disk 2.

Figure 2.- Spray-injector apparatus (detail).

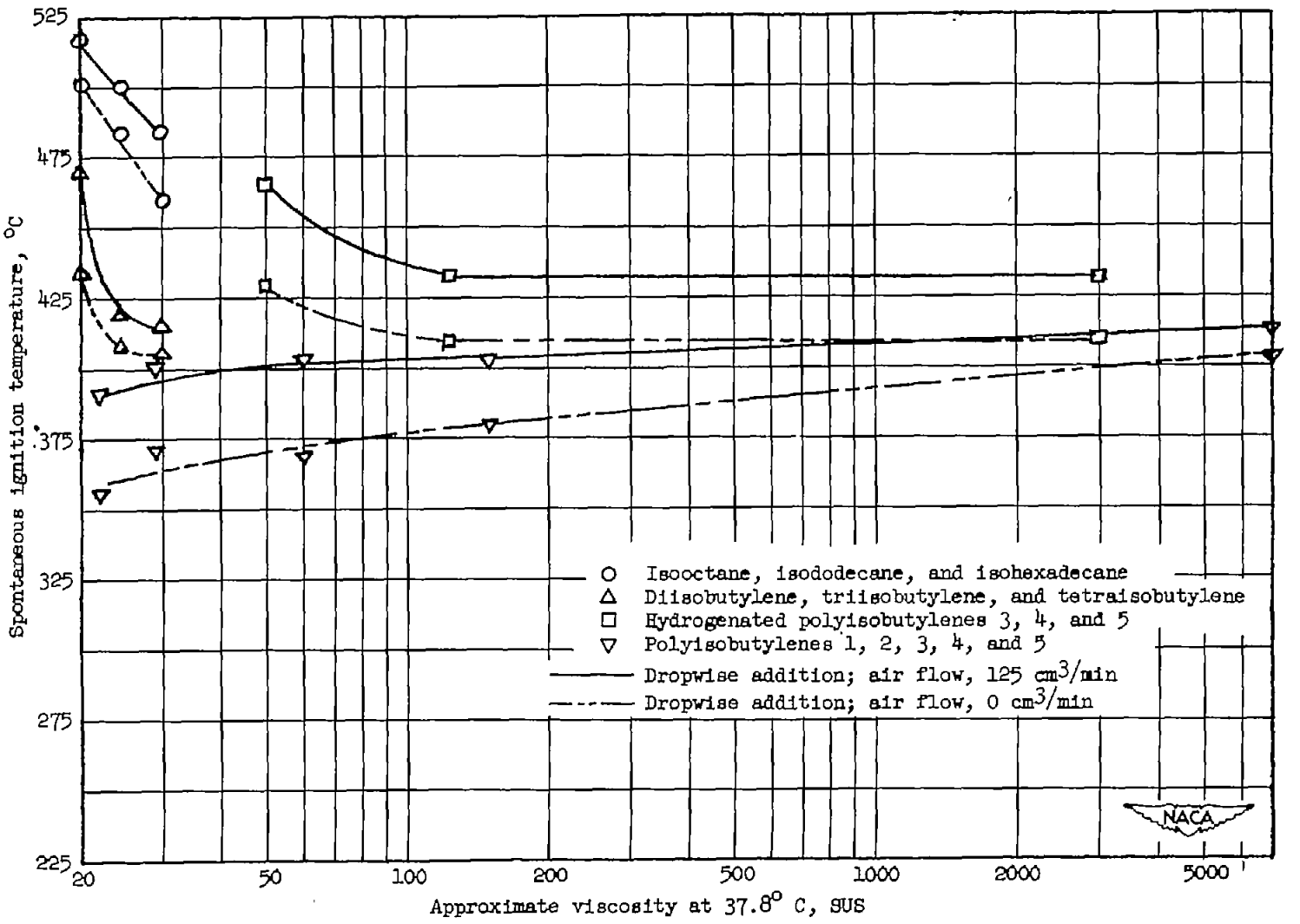

Figure 3.- Spontaneous ignition temperatures of polyisobutylenes and their hydrogenated derivatives.

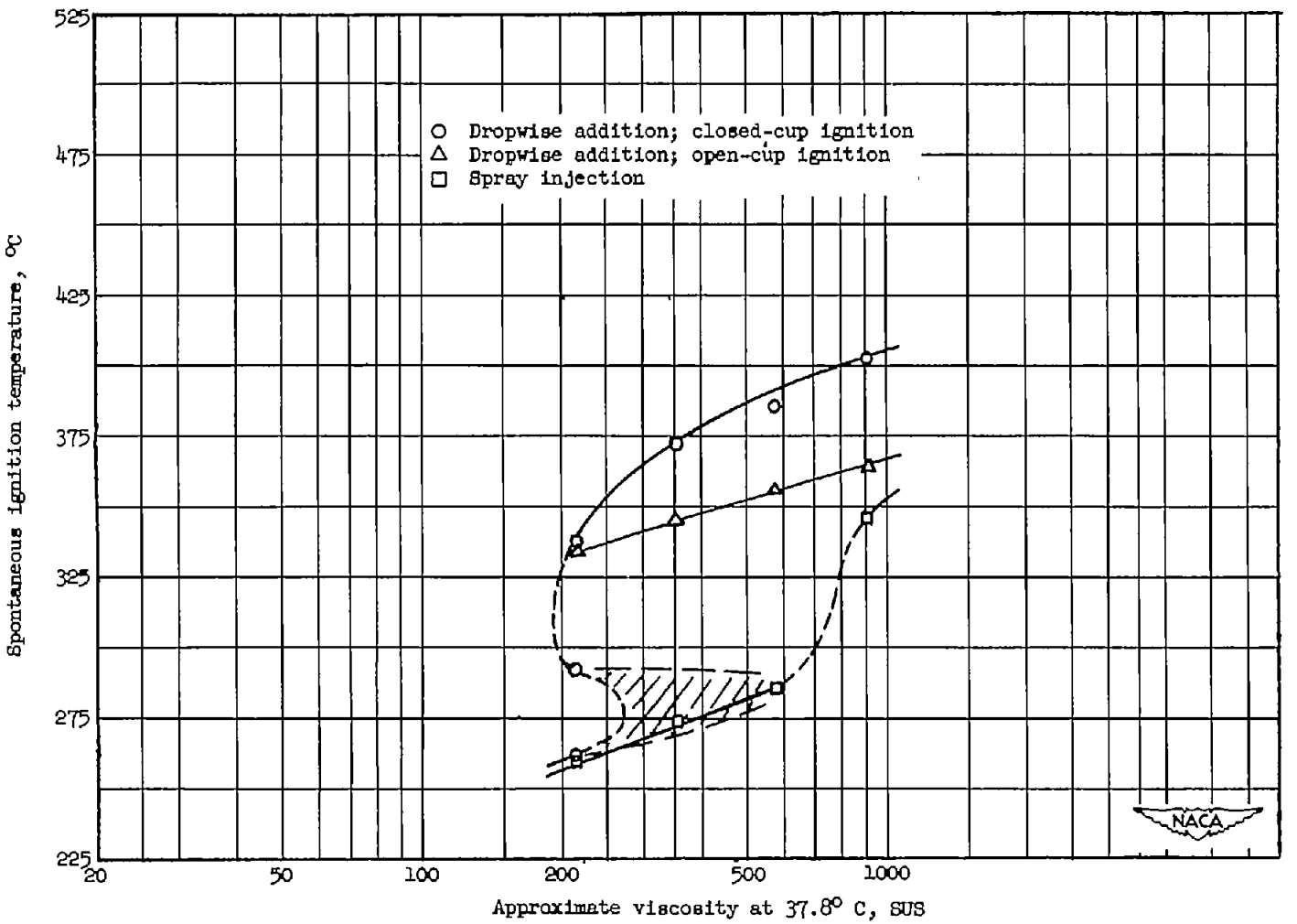

Figure 4.- Spontaneous ignition of paraffin lubricants (SAE 10, 20, 30, and 40 oils) at air flow of 125 cubic centimeters per minute. Shaded area indicates smoke pulse ignitions (dropwise addition).

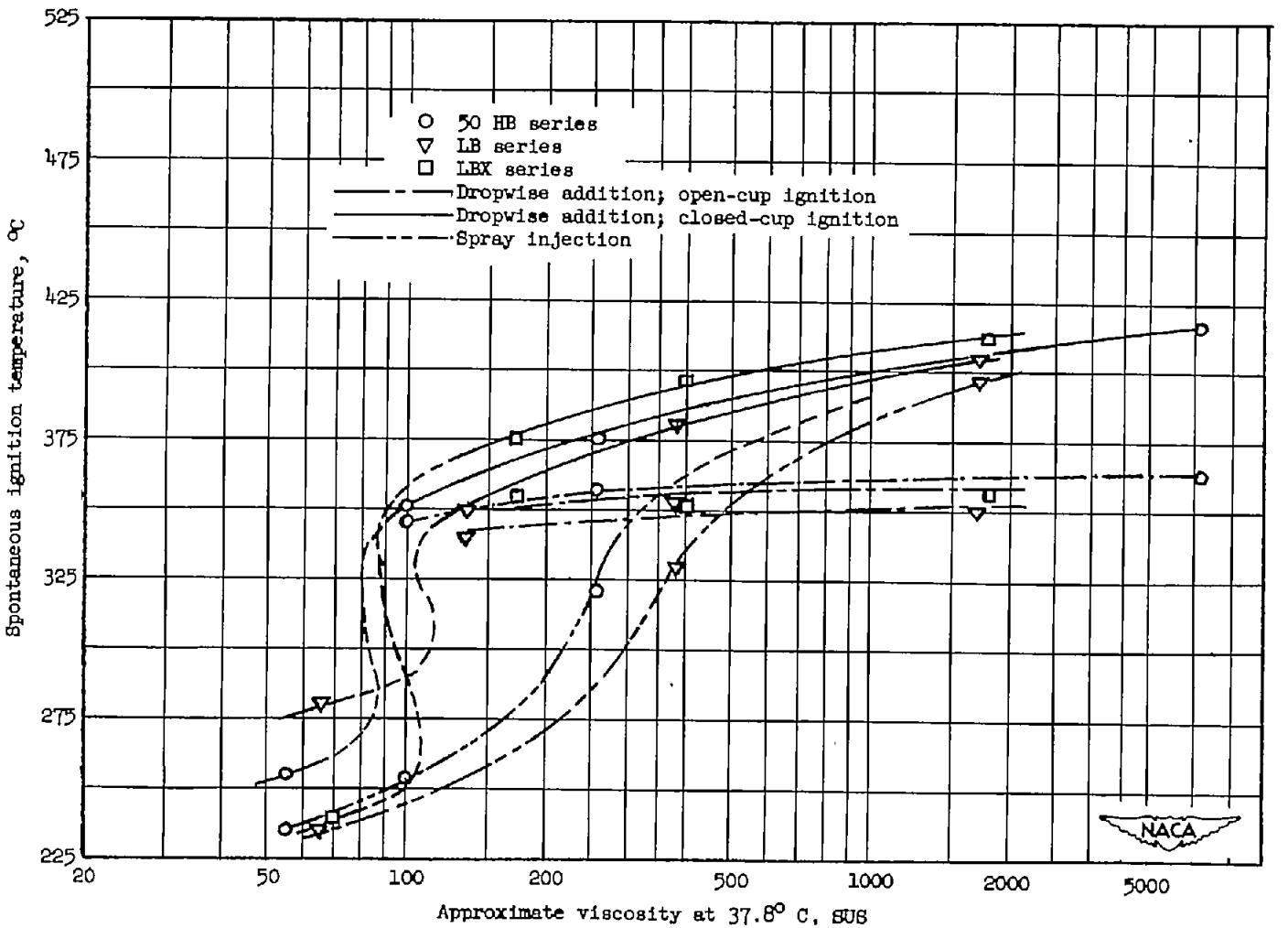

Figure 5.- Spontaneous ignition temperatures of Ucons at air flow of 125 cubic centimeters per minute. 50 HB series: 50 HB 55, 50 HB 100, 50 HB 260, and 50 HB 5100; LB series: LB 65, LB 135, LB 385, and LB 1715; LBX series: LB 70 X, LB 170 X, LB 400 X, LB 1800 X.

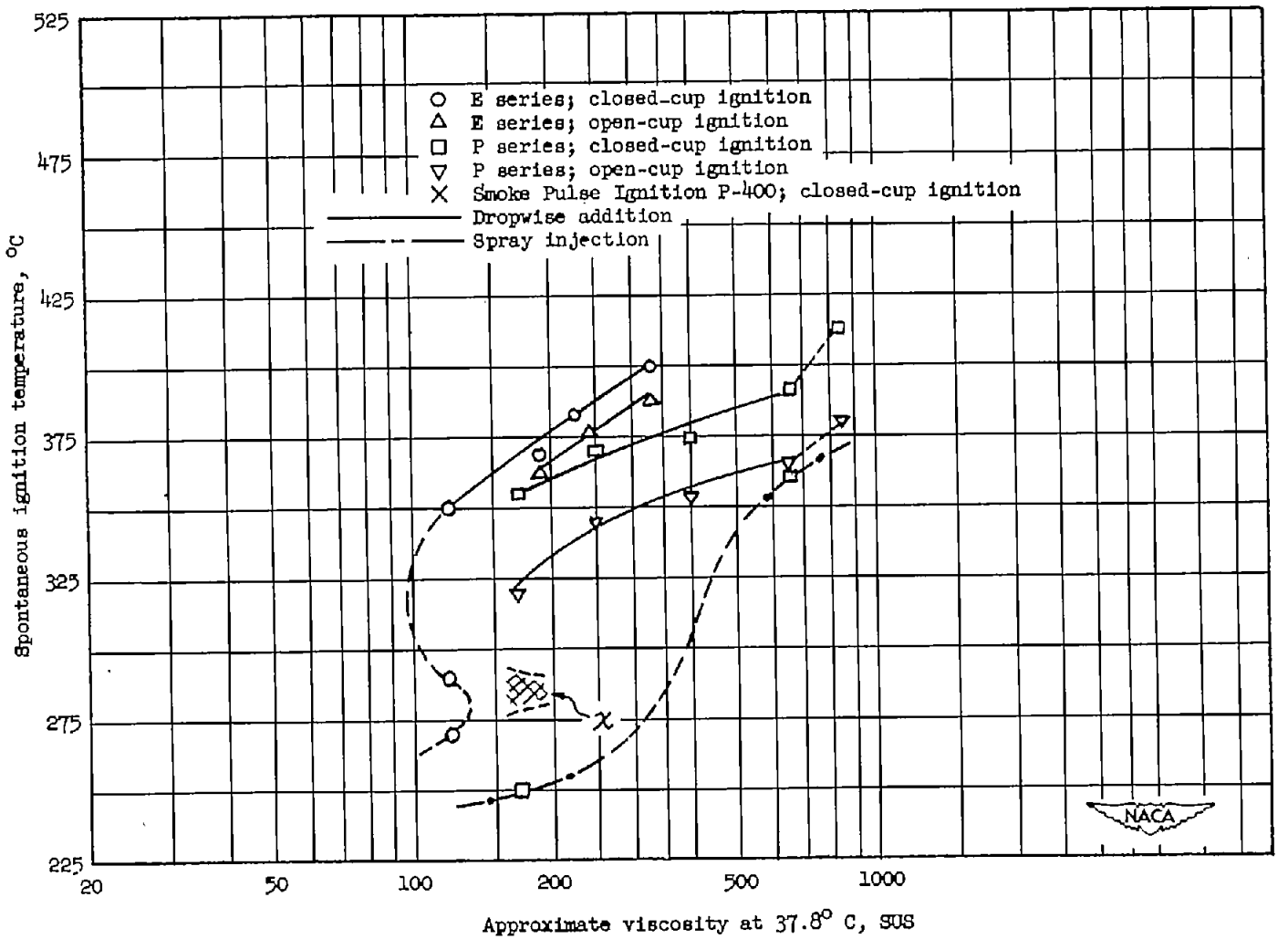

Figure 6.- Spontaneous ignition temperatures of polyglycols at air flow of 125 cubic centimeters per minute. E series: E-200, E-300, E-400, and E-600; P series: P-400, P-750, P-1200, P-2000, and 15-200.

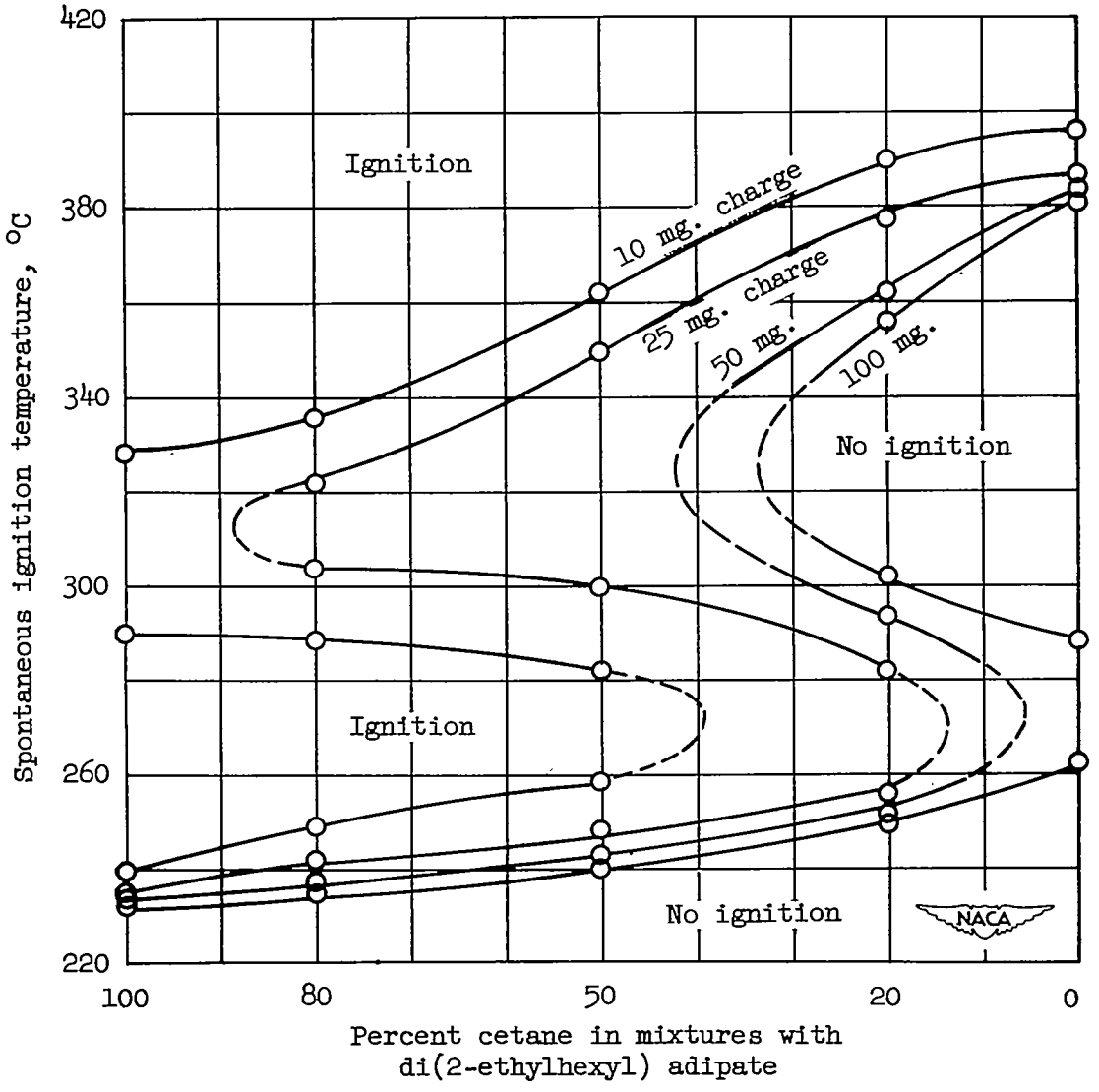

Figure 7.- Spontaneous ignition characteristics of various cetane and di(2-ethylhexyl) adipate mixtures at four different charge sizes. Procedure, dropwise addition; air flow, 125 cubic centimeters per minute.

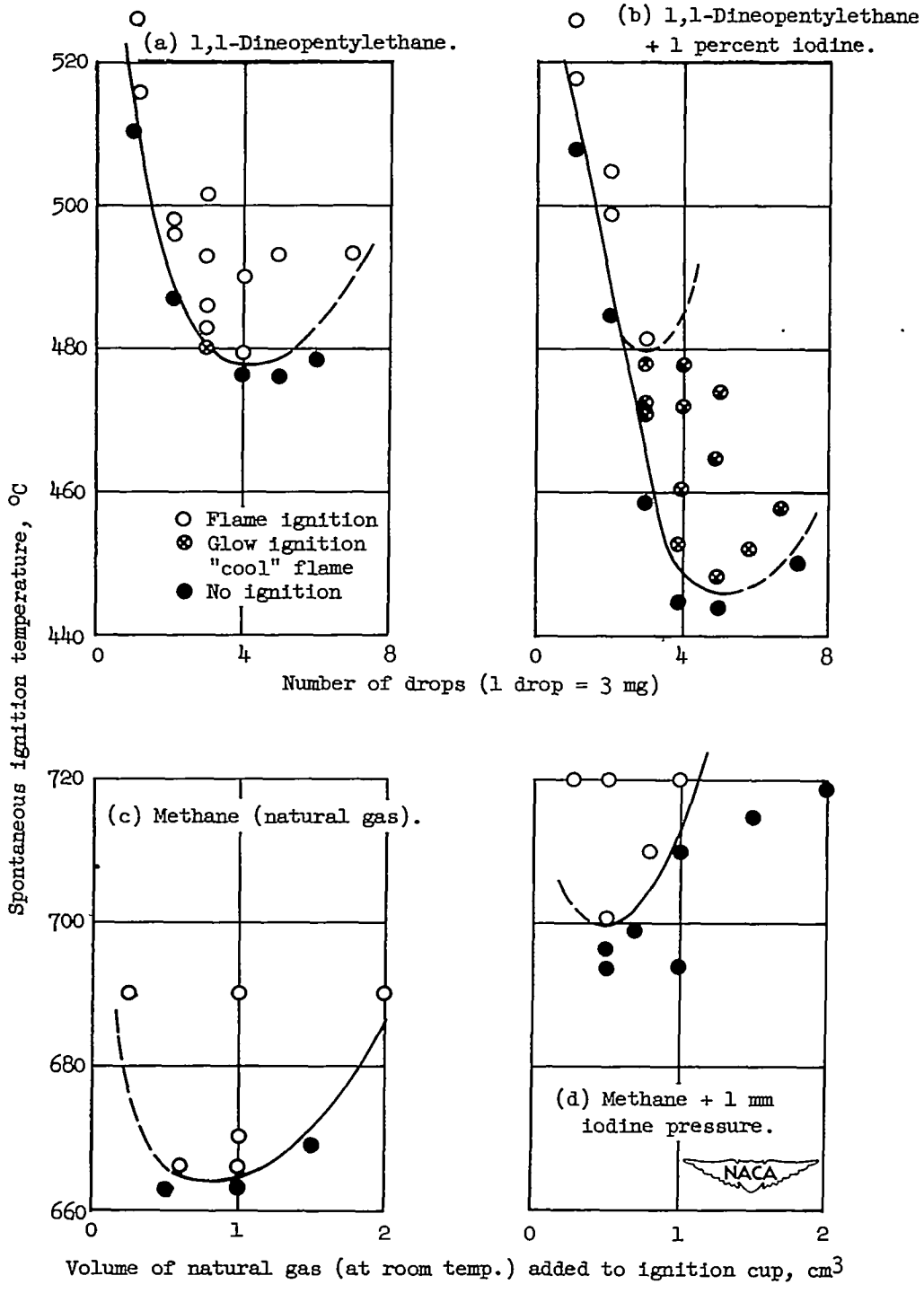

Figure 8.- Influence of iodine on spontaneous ignition characteristics of methane and 1,1-dineopentylethane. Procedure, dropwise addition; air flow, 25 and 0 cubic centimeters per minute for (a) and (b) and for (c) and (d), respectively.

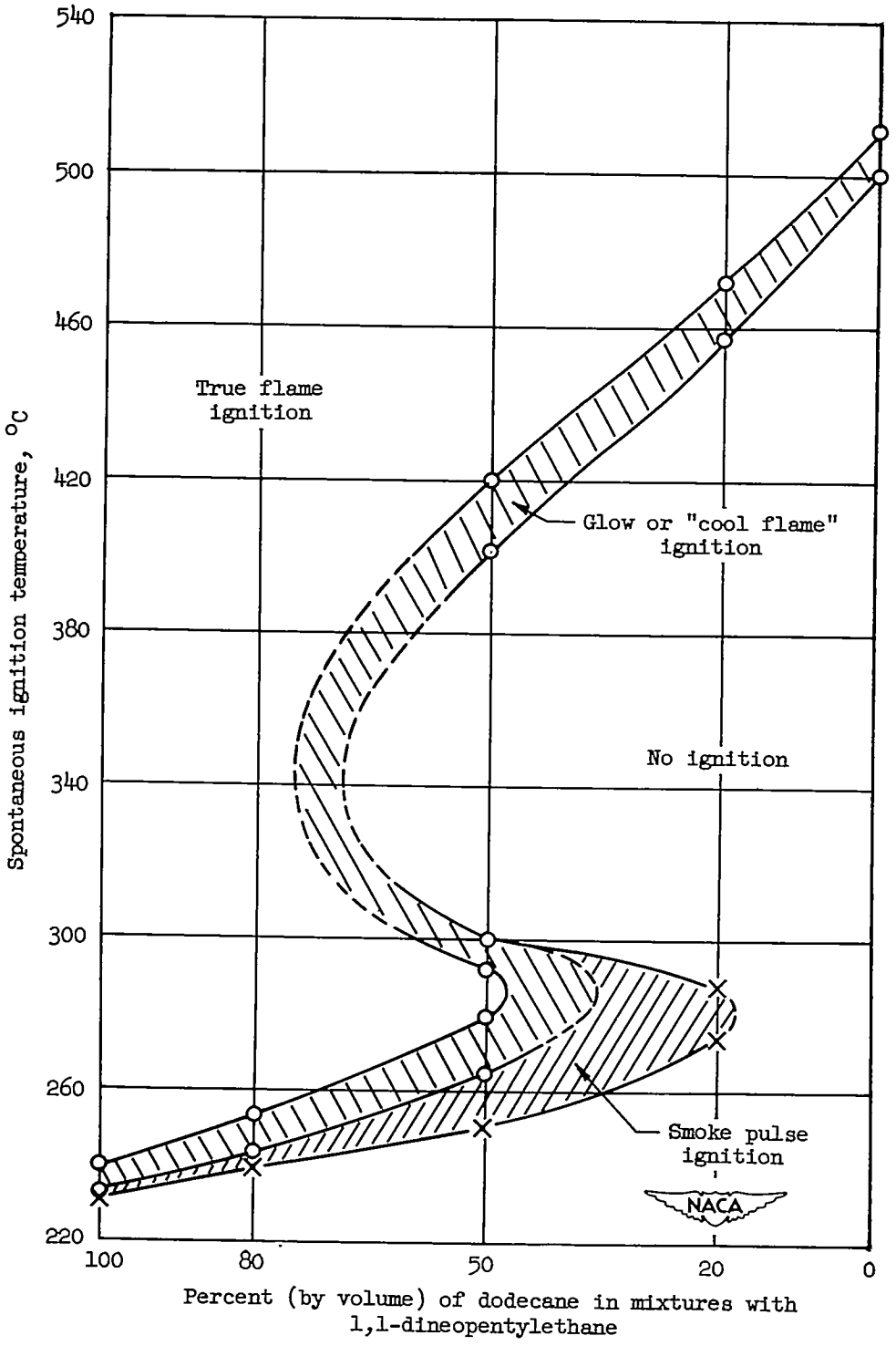

Figure 9.- Spontaneous ignition characteristics of various dodecane and 1,1-dineopentylethane mixtures showing boundary projections of three general types of ignition. Procedure, dropwise addition; cup assembly, stainless steel; air flow, 125 cubic centimeters per minute.

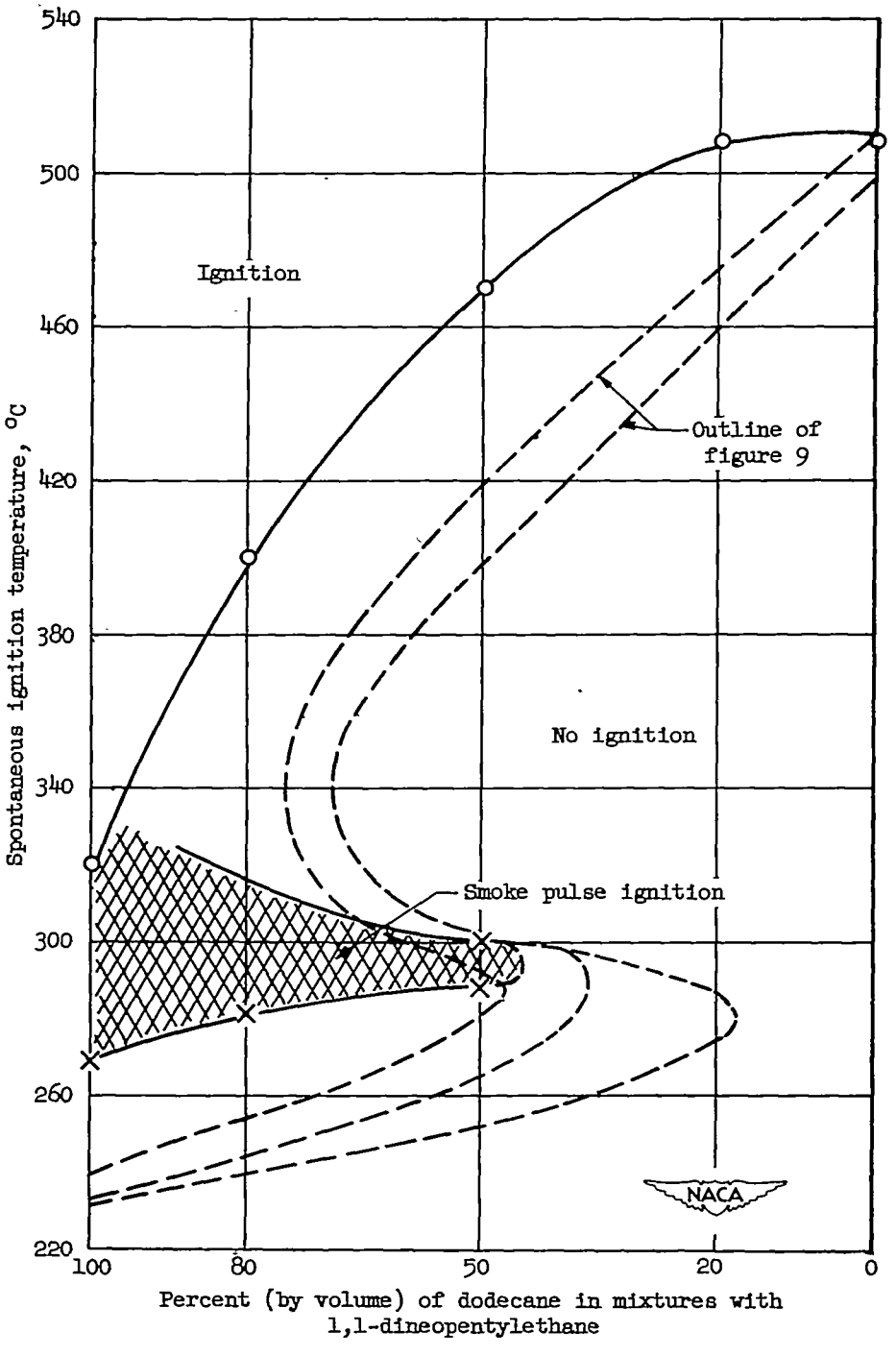

Figure 10.- Change in spontaneous ignition characteristics of dodecane and 1,1-dineopentylethane mixtures when 5 mole percent of di-p-tolylamine is added to these mixtures. Procedure, dropwise addition; cup assembly, stainless steel; air flow, 125 cubic centimeters per minute.

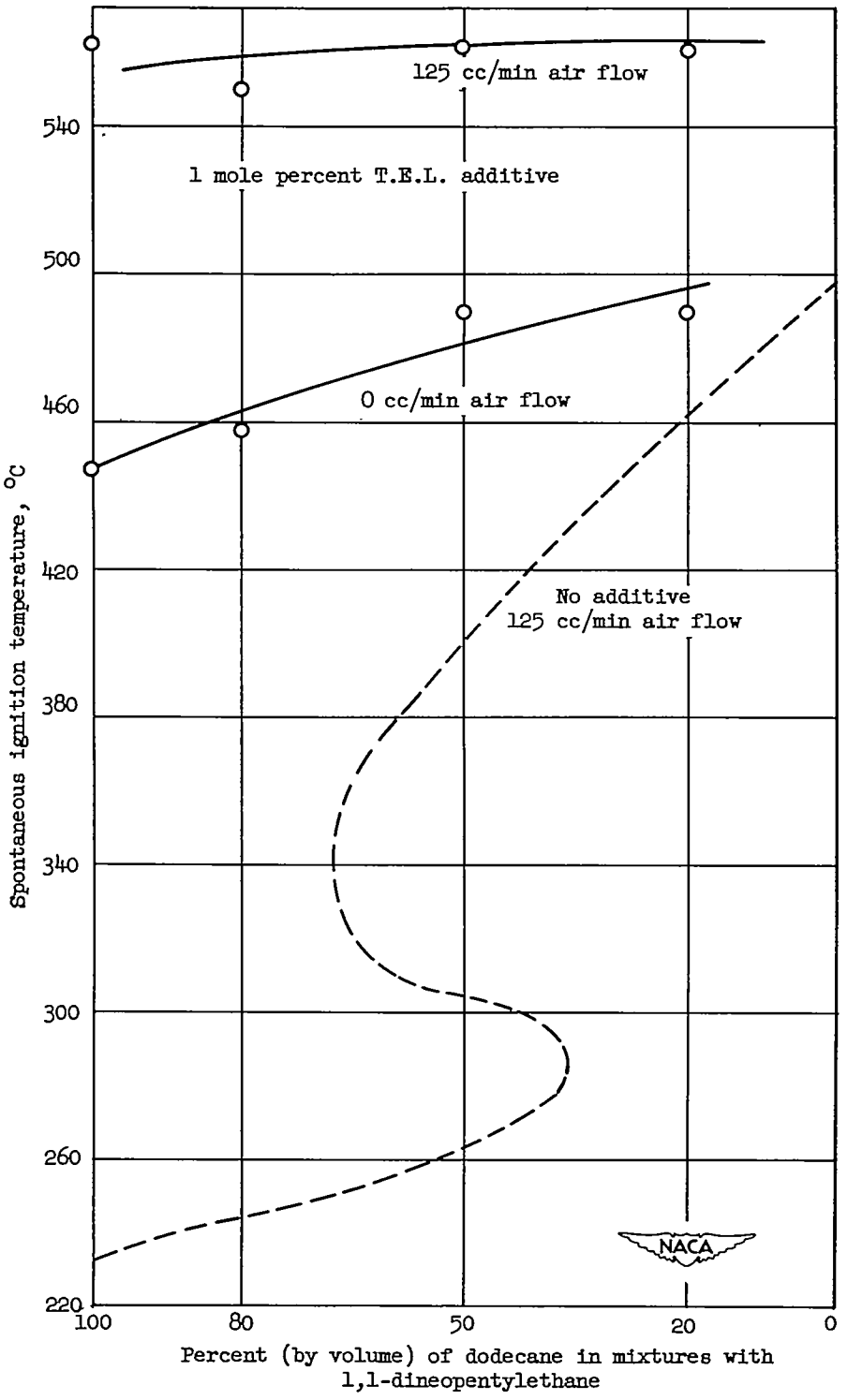

Figure 11.- Influence of 1 mole percent tetraethyl lead on spontaneous ignition characteristics of dodecane and 1,1-dineopentylethane mixtures (dropwise-addition procedure).

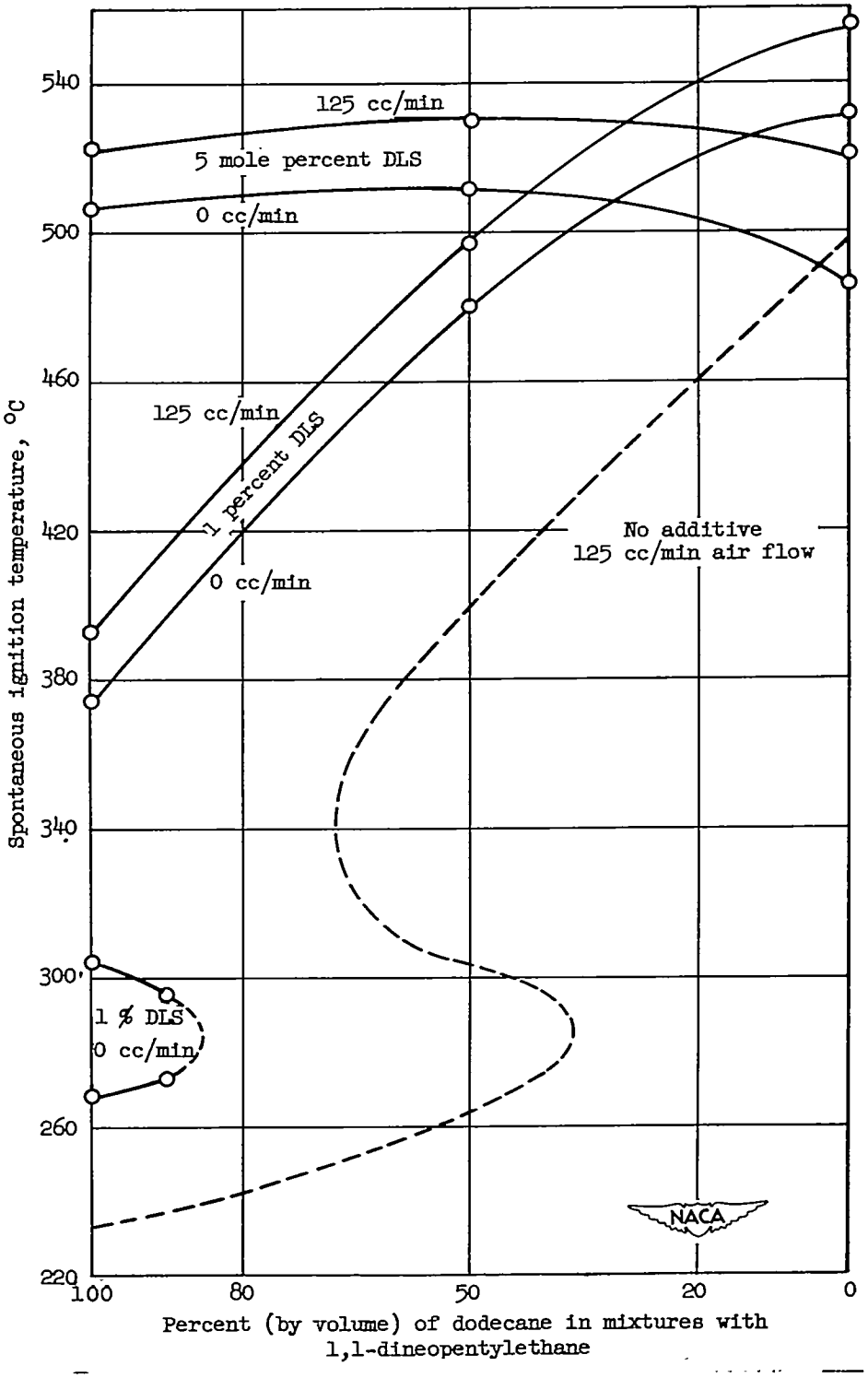

Figure 12.- Influence of 1 and 5 mole percent of dilauryl selenide (DLS) on spontaneous ignition characteristics of dodecane and 1,1-dineopentylethane mixtures (dropwise-addition procedure).

NACA-Langley - 7-30-54 - 125