REPORT 1221

THEORETICAL STUDY OF THE TUNNEL-BOUNDARY LIFT INTERFERENCE DUE TO SLOTTED WALLS IN THE PRESENCE OF THE TRAILING-VORTEX SYSTEM OF A LIFTING MODEL [1]

By Clarence W. Matthews

SUMMARY

The equations presented in this report give the interference on the trailing-vortex system of a uniformly loaded finite-span wing in a circular tunnel containing partly open and partly closed walls, with special reference to symmetrical arrangements of the open and closed portions. Methods are given for extending the equations to include tunnel shapes other than circular. The rectangular tunnel is used to demonstrate these methods. The equations are also extended to nonuniformly loaded wings.

An analysis of the equations for certain configurations has shown that: (1) only a small percentage of slot opening is required to give zero interference conditions if the tunnel contains four or more slots; (2) in the configurations studied, the ratio between the slotted-tunnel interference and the closed-tunnel interference at the center of the tunnel is approximately constant for various model spans; and (3) tunnels containing an odd number of slots or nonsymmetrical slot arrangements cause an additional rolling moment or a cross flow on the wings, or both.

INTRODUCTION

In a study of solid-blockage interference (see ref. 1), it has been shown that tunnels containing mixed boundaries, that is, partly open and partly closed walls, will eliminate or greatly reduce such interference. Since the slotted tunnel configuration required to eliminate solid blockage can not eliminate lift interference, it is necessary to study the interference on the trailing vortices of a lifting model in order to make the necessary corrections to the lift characteristics of a model.

The problem of one or two slots has been treated by various authors (see refs. 2 to 4). The case of more than two slots has also been treated in references 5 and 6. Reference 5 treats only small wings in circular tunnels, and reference 6 treats only the case for a large number of evenly spaced slots.

The purpose of this investigation is to present equations which express the tunnel-wall interference due to mixed open and closed boundaries in the presence of the trailing-vortex system of a finite-span lifting model at subsonic velocities. Special attention is given to test sections in which the slots are symmetrically located with respect to both axes.

Various extensions of the theory have been made and follow in a general fashion the methods of reference 5. These extensions include the effects of wing span, slot configurations, interference at points near the center, nonuniform loading, and methods for calculating the interference in tunnels of other than circular cross section.

Numerical calculations of the interference characteristics of several symmetrical cases are presented and are used to show the properties of the interference of circular tunnels containing 1, 2, 4, 8, and 12 slots symmetrically located with respect to the x- and y-axes and a square tunnel containing 8 slots symmetrically located in the top and bottom walls.

SYMBOLS

$A_n, B_n, a_n, b_n, \alpha_n, \beta_n$	constants
b	span of wing
s	half-span of wing (see fig. 1)
C	tunnel cross-sectional area
C_L	lift coefficient of model
$c=\frac{s}{l}$	
ΔC_D	drag increment due to interference
D	tunnel diameter (see fig. 4)
$d\mathbf{s}$	tangential line element
k	quality factor, the ratio at any given point of the interference of a slotted tunnel to the interference of a closed tunnel with the same cross section
l	half-span length of wing in ζ-plane (fig. 1)
m	number of slots or panels in tunnel
g, n, j, q	integer denoting indices of summations and multiple products
p	special number defined in expression (2)
r	radial distance of point from coordinate center
R	radius of circular tunnel
S	model or wing area
u	x-component of velocity
v	y-component of velocity
V	magnitude of velocity
$\mathbf{V}$	velocity vector
x, y	coordinates of rectangular system (fig. 1)
z	complex variable, $x+iy$
$\frac{dw}{dz}$	complex velocity, $u-iv$

[1] Supersedes recently declassified NACA RM L53A26, 1953.

Γ	circulation about a point, positive in counterclockwise direction
γ	function of θ_0 and b (see eq. (32))
δ	proportionality factor used in equation for ϵ_I
ϵ_I	interference correction angle to be added to measured angle of attack, $\frac{\delta S C_L}{C}$ (see ref. 7)
σ	strength of a source
ζ	complex variable in transformed plane
θ	angular coordinate of polar system (fig. 1)
θ_0	polar angle of slot edge
ϑ	complex function of z $(z=e^{i\vartheta})$
λ	parameter defined in equation (106) (also see paragraph 14.8, ref. 8)
φ	perturbation potential
$\frac{\partial\varphi}{\partial n}$	derivative of potential in direction normal to a given line

Subscripts:

C	closed tunnel
I	interference condition
N	nonuniformly loaded
U	uniformly loaded

THEORY OF LIFT-VORTEX INTERFERENCE IN SLOTTED TUNNELS

GENERAL ANALYSIS

Theoretical boundary conditions of flow about trailing vortices in a tunnel containing mixed open and closed boundaries.—The equations for the interference on the lift of a model due to mixed open and closed tunnel walls in the presence of a trailing-vortex system may be obtained by considering the same two-dimensional approximation of the flow field that is used in reference 7. The conditions of this two-dimensional approximation may be briefly stated as: (1) the tunnel and its boundaries extend from a point an infinite distance upstream of the model to a point an infinite distance downstream of the model; (2) the velocities induced by the trailing vortices in the cross-sectional plane located at the model are one-half of those induced in a far-downstream cross-sectional plane; (3) the induced-velocity flow field in the far-downstream section may be treated with two-dimensional methods; (4) the boundary condition which must be satisfied at a solid portion of a tunnel wall is that the flow must be tangential to it, or

$$\frac{\partial\varphi}{\partial n}=0 \tag{1}$$

(5) the condition which must be satisfied at an open portion of a tunnel wall is that the potential over that portion must be constant or the flow must be normal to it; (6) no singularities other than the trailing vortices can exist within the boundaries of the tunnel; and (7) the constant potential in every slot must be equal to that in every other slot. The final condition is required because the pressure is the same at every slot and is shown by the following considerations. Since the pressure is constant over the entire region outside the tunnel there will be no pressure differences between the slots at a point far upstream, and hence there can be no flow between the slots due to external influences. Also, since this point is too far from the model to be influenced by it, there can be no flow due to the model. As there is no flow between the slots, no potential gradient can exist between the slots; therefore, the potentials in all the slots must be the same. It therefore follows by condition (5) that, in the far-downstream position, the constant potential in every slot is equal to that in every other slot.

Coordinate system used.—The coordinate system used in reference 8 is also used throughout this report. In this system, it is expedient, in order to avoid confusion with the customary notations, $x+iy$, to use as axes of reference the following system: x-axis to the right, z-axis downstream, and y-axis to form a right-hand system. Since the z-axis is not used in the calculations, it is possible to use the complex coordinate $z=x+iy$ without confusion. The velocity components are denoted by u in the x-direction and v in the y-direction. The symbol w is reserved for the complex potential.

Velocity fields in circular slotted tunnels.—The previously stated boundary conditions may be satisfied by using complex velocity functions rather than complex potential functions. This is done by selecting a complex velocity function that has singularities at the wing tips and a flow direction either normal or tangential to the tunnel walls. If this function is multiplied by another complex function whose value on the tunnel wall changes from all real to all imaginary (or the opposite) at each slot edge, then the flow will be rotated 90° at those points so that the final flow of the product of the two functions will be normal to the wall on selected portions and will be tangential to the wall on the remaining portions. It can, however, be expected that the second function will introduce within the tunnel singularities which are not permitted according to the stated boundary conditions, so that a third function which contains all the forbidden singularities must be used in such a fashion that it will cancel the forbidden singularities of the second function.

In order to make up the first function, suppose that the two singularities at the wing tips with their reciprocal singularities are written as $1/(z^2-s^2)(1-z^2s^2)$, where z is the complex variable $x+iy$ and s is the semispan of the lifting wing. If this function is examined by letting $z=e^{i\theta}$, where θ is a polar angle (fig. 1), it will be found that the flow may be made normal to the walls if the factor z is included in the numerator. This flow may also be made tangential to the wall by multiplying by the factor i. Thus, the first function may be written

$$\frac{pz}{(z^2-s^2)(1-z^2s^2)} \tag{2}$$

The symbol p can be chosen to be either 1 or i, depending on whether normal or tangential flow is required at the walls.

The second function can be developed by considering the square root of a function which is real on the wall and changes sign at each slot edge so that the square root of the function changes from real to imaginary at each slot edge. Such a function may be expressed by $\sqrt{\cot\frac{\vartheta}{2}-\cot\frac{\theta_0}{2}}$ where $z=e^{i\vartheta}$ and ϑ is in general complex. Examination of this function

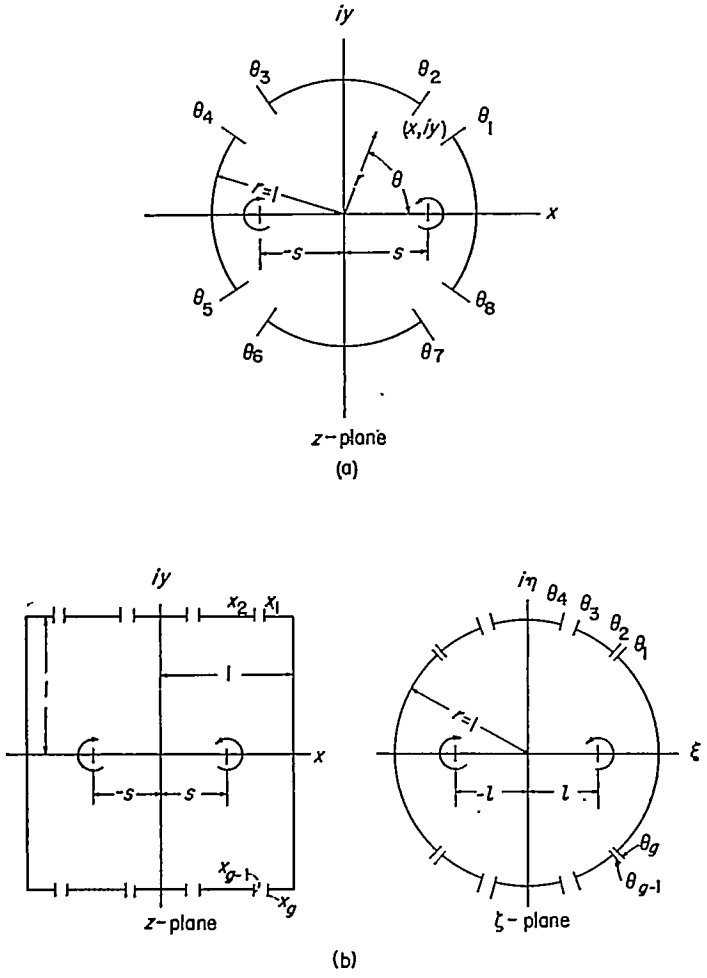

(a) Circular tunnel.
(b) Square tunnel.

FIGURE 1.—The coordinate system used for the investigation of the lift interference due to slotted tunnels.

shows that it becomes $\sqrt{\cot\frac{\theta}{2}-\cot\frac{\theta_g}{2}}$ on the tunnel wall, where θ_g is the polar angle of a slot edge (see fig. 1). The term under the radical changes from positive to negative at $\theta=\theta_g$ so that the function changes from real to imaginary at the point θ_g on the tunnel wall. If a number of these functions having different θ_g's marking the transition from open to closed sections of the tunnel wall are multiplied together, it can be seen that the product will change sign at each value of θ_g so that the function will be real on alternate sections. This use of $\cot\frac{\vartheta}{2}$ also suggests the use of other complex trigonometric functions such as $\cos\vartheta$, $\sin\vartheta$, and $\tan\frac{\vartheta}{2}$. The sine and cosine terms will, on examination, be found to introduce two slot edges for each value of θ_g, rather than one. These two slot edges will be found to be located symmetrically with respect to the x-axis for the cosine term and to the y-axis for the sine term. Thus, the use of these functions is suggested for symmetrical slot configurations.

Since any of these functions may introduce singularities within the tunnel, it is necessary to examine them for such singularities. The four functions may be written as multiple products of the form

$$\prod_{g=1}^{q}\sqrt{\cos\vartheta-\cos\theta_g}\equiv \sqrt{\cos\vartheta-\cos\theta_1}\sqrt{\cos\vartheta-\cos\theta_2}\ldots\sqrt{\cos\vartheta-\cos\theta_q} \tag{3}$$

with equivalent expresssions for

$$\prod_{g=1}^{q}\sqrt{\sin\vartheta-\sin\theta_g} \tag{4}$$

$$\prod_{g=1}^{q}\sqrt{\cot\frac{\vartheta}{2}-\cot\frac{\theta_g}{2}} \tag{5}$$

and

$$\prod_{g=1}^{q}\sqrt{\tan\frac{\vartheta}{2}-\tan\frac{\theta_g}{2}} \tag{6}$$

When $z=e^{i\vartheta}$ is substituted for ϑ, the expressions (3), (4), (5), and (6) become, respectively,

$$2^{-q/2}z^{-q/2}\prod_{g=1}^{q}\sqrt{z^2+1-2z\cos\theta_g} \tag{7}$$

$$2^{-q/2}z^{-q/2}i^{-q/2}\prod_{g=1}^{q}\sqrt{z^2-1-2iz\sin\theta_g} \tag{8}$$

$$(z-1)^{-q/2}\prod_{g=1}^{q}\sqrt{i(z+1)-(z-1)\cot\frac{\theta_g}{2}} \tag{9}$$

$$(z+1)^{-q/2}i^{-q/2}\prod_{g=1}^{q}\sqrt{(z-1)-i(z+1)\tan\frac{\theta_g}{2}} \tag{10}$$

Examinations of the functions (7) to (10) shows that they contain forbidden singularities at the following values of z: the cosine and sine terms at $z=0$, the cotangent term at $z=1$, and the tangent term at $z=-1$. Several functions which contain singularities identical to those appearing in functions (7) to (10) and which are real on the tunnel are

$$\sum_{n=0}^{q/2}(a_n\cos n\vartheta+b_n\sin n\vartheta) \tag{11}$$

which has a singularity at $z=0$,

$$\sum_{n=0}^{q/2}(\alpha_n+i\beta_n)\cot^n\left(\frac{\vartheta}{2}\right) \tag{12}$$

which has a singularity at $z=1$, and

$$\sum_{n=0}^{q/2}(\alpha_n+i\beta_n)\tan^n\left(\frac{\vartheta}{2}\right) \tag{13}$$

which has a singularity at $z=-1$. In the expressions (11), (12), and (13), a_n, α_n, b_n, and β_n are real constants. It may be seen now that if the trigonometric series is divided by the multiple product which contains the same singularities, the forbidden singularities will be canceled out of the final equation and an equation will be left which has only the desired singularities within the tunnel.

The reason for using the multiple product in the denominator may be seen by examining the flow about the slot edges. Since the flow must turn a sharp corner as it goes around the edge of each slot, the velocity must be infinite at that point. Since the multiple-product function becomes equal to zero at each slot edge, it must be placed in the denominator of the final complex velocity function to insure the required infinite velocities.

Before the final complex velocity function is written, it should be observed that function (2) has a zero at the point $z=0$ which must also be removed either by including an extra term in summation (11) or by multiplying summation (12) or (13) by $a_1 \cos \vartheta + b_1 \sin \vartheta$. With this relationship in mind, the final complex velocity functions may be written:

$$\frac{dw}{dz}=\frac{pz\sum_{n=0}^{\frac{q}{2}+1}(a_n \cos n\vartheta + b_n \sin n\vartheta)}{(z^2-s^2)(1-z^2s^2)\prod_{g=1}^{q}\sqrt{\cos\vartheta-\cos\theta_g}} \tag{14}$$

$$\frac{dw}{dz}=\frac{pz\sum_{n=0}^{\frac{q}{2}+1}(a_n \cos n\vartheta + b_n \sin n\vartheta)}{(z^2-s^2)(1-z^2s^2)\prod_{g=1}^{q}\sqrt{\sin\vartheta-\sin\theta_g}} \tag{15}$$

$$\frac{dw}{dz}=\frac{pz(a_1 \cos\vartheta + b_1 \sin\vartheta)\sum_{n=0}^{q/2}(\alpha_n+i\beta_n)\cot^n\left(\frac{\vartheta}{2}\right)}{(z^2-s^2)(1-z^2s^2)\prod_{g=1}^{q}\sqrt{\cot\frac{\vartheta}{2}-\cot\frac{\theta_g}{2}}} \tag{16}$$

and an equation similar to equation (16), where $\tan\frac{\vartheta}{2}$ is used rather than $\cot\frac{\vartheta}{2}$.

In the application of these equations, each value of θ_g is noted to introduce two slot edges into each of equations (14) and (15) and only a single slot edge into equation (16). Since each panel has two edges, q must be equal to the number of panels m in equations (14) and (15) and to twice the number of panels, or $2m$, in equation (16). Also, if equation (14) or (15) is applied to tunnels containing an odd number of slots, it will be found that the singularity arising from the multiple product will contain a term of the order ½, which cannot be removed by the summation. In order to remove this singularity, the summation of equation (14) or (15) must be rewritten as

$$\sum_{n=0}^{\frac{m+1}{2}}\left(a_n \cos\frac{2n+1}{2}\vartheta + b_n \sin\frac{2n+1}{2}\vartheta\right) \tag{17}$$

This series will, upon examination, be found to contain a singularity of the order ½, which will cancel the one-half-power term due to the extension of the multiple product over an odd number of slots.

Equations (14) and (15) introduce slot edges at locations symmetrical to the x- and y-axes, respectively; thus, it is to be expected that the use of these equations for symmetrical cases will simplify the problem. These equations will not work, however, for nonsymmetrical cases as they will introduce slots at points where they are not desired; therefore, it is necessary for the general case to resort to the more complicated but completely general equation (16). Equation (16) can be used for symmetrical cases; however, the expressions resulting from its use can be reduced to the forms obtained from equations (14) and (15).

In order to make the final application of equation (14), (15), or (16) to a wind tunnel, the arbitrary constants of the summations must be evaluated. This evaluation can be effected by using the remaining boundary conditions, which require that the potentials in each slot must be equal to each other and that only a vortex flow can exist about the singularities within the tunnel.

The potential condition can be evaluated by the following line integral:

$$\oint_{(x_1,y_1)}^{(x_2,y_2)} \mathbf{V}\cdot d\mathbf{s}=\varphi_{(x_2,y_2)}-\varphi_{(x_1,y_1)}=0 \tag{18}$$

in which the limits of integration terminate in the slot. One path which can be used is the streamline which flows along the panel. When this streamline is used as the path of integration, equation (18) becomes

$$\int_{\theta_n}^{\theta_{n+1}} V\,d\theta=\varphi_{n+1}-\varphi_n=0 \tag{19}$$

as the potential is the same over all slots. Since the velocity V will in general be complex, two equations exist for each panel.

The strengths of the circulation about a pole and of the source at a pole are fixed by the relation,

$$\Gamma+i\sigma=\oint\frac{dw}{dz}dz \tag{20}$$

where Γ is the circulation due to lift and σ is the source strength and is equal to zero. Since equation (20) must be evaluated about each pole, it gives four equations which may be used to evaluate the constants.

The set of boundary equations (19) and (20) may be considered as a set of simultaneous equations in the unknown constants found in equation (14), (15), or (16) and is used to determine the values of these constants. If these constants are to be uniquely determined, there must be as many equations as there are constants. An examination of equations (19) and (20) shows that equation (19) gives $2m$ equations and that equation (20) gives four equations, making a total of $2m+4$ equations which may be used to determine the unknown constants. The number of constants which must be satisfied is determined from an examination of equation (16). The paragraph following equation (16) shows that q must equal $2m$, so that the number of constants must equal $2m+4$; hence the number of equations and the number of constants are equal, so that all the constants are determined and a unique solution is obtained for the problem.

DERIVATION OF EQUATIONS

Slots symmetrically located with respect to the x- and y-axes.—In the case of symmetry about the x- and y-axes, considerable simplification results. Equation (14) can be used in place of equation (16). In equation (14), each value of θ_g in the multiple products can be used to produce four changes of sign, provided these products are written as

$$\prod_{g=1}^{m/2}\sqrt{\cos^2\vartheta-\cos^2\theta_g} \tag{21}$$

$$\prod_{g=1}^{m/2}\sqrt{\sin^2\vartheta-\sin^2\theta_g} \tag{22}$$

These changes of sign are observed at θ_g, $-\theta_g$, $\pi-\theta_g$, and $\pi+\theta_g$, or one in each quadrant. Hence, if the values of θ_g are known in one of the quadrants, the multiple product need be extended only over that quadrant, as all the other slots will be automatically introduced. If the slots are evenly spaced and of equal width, function (21) or (22) can be replaced by

$$\sqrt{\cos^2\frac{m}{2}\vartheta-\cos^2\frac{m}{2}\theta_1} \tag{23a}$$

or

$$\sqrt{\sin^2\frac{m}{2}\vartheta-\sin^2\frac{m}{2}\theta_1} \tag{23b}$$

Expressions (23a) and (23b) can be shown to produce slots which are evenly spaced and of equal width by the substitution of

$$\vartheta=\frac{2\pi n}{m}-\phi$$

where

$$\phi=\frac{2\pi n}{m}-\theta$$

for ϑ in expressions (23a) and (23b).

When this modification is taken into consideration, equation (14) then may be written with the substitution of $z=e^{i\vartheta}$ as

$$\frac{dw}{dz}=\frac{pz\sum_{n=0}^{\frac{m}{2}+1}\left(a_n\frac{z^{2n}+1}{2z^n}-ib_n\frac{z^{2n}-1}{2z^n}\right)}{(z^2-s^2)(1-z^2s^2)\frac{1}{2^{m/2}z^{m/2}}\prod_{g=1}^{m/2}\sqrt{z^4-2z^2\cos 2\theta_g+1}} \tag{24}$$

which may be reduced to

$$\frac{dw}{dz}=\frac{2^{\frac{m}{2}-1}p\sum_{n=0}^{\frac{m}{2}+1}\left[a_nz^{\frac{m}{2}-n+1}(z^{2n}+1)-ib_nz^{\frac{m}{2}-n+1}(z^{2n}-1)\right]}{(z^2-s^2)(1-z^2s^2)\prod_{g=1}^{m/2}\sqrt{z^4-2z^2\cos 2\theta_g+1}} \tag{25}$$

where the factor p is equal to 1 if slots intersect the x-axis and is equal to i if panels intersect the x-axis. If the slots are evenly spaced, and of equal width, the function

$$\sqrt{z^{2m}-2z^m\cos m\theta_1+1}$$

can be substituted for the multiple product in equation (24) or (25).

The constants of equation (25) must be evaluated by using the boundary condition for the equality of the potential in each slot (eq. (19)) and for the circulation and nonexistence of sources (eq. (20)). Equation (20) is evaluated by applying Cauchy's integral theorem to equation (25) to obtain the required line integral of dw/dz. This evaluation gives, about the positive pole s,

$$\Gamma+i\sigma=\frac{2\pi ip2^{\frac{m}{2}-1}\sum_{n=0}^{\frac{m}{2}+1}\left[a_ns^{\frac{m}{2}-n+1}(s^{2n}+1)-ib_ns^{\frac{m}{2}-n+1}(s^{2n}-1)\right]}{2s(1-s^4)\prod_{g=1}^{m/2}\sqrt{s^4-2s^2\cos 2\theta_g+1}} \tag{26}$$

and about the negative pole $-s$

$$-\Gamma-i\sigma=\frac{2\pi ip2^{\frac{m}{2}-1}\sum_{n=0}^{\frac{m}{2}+1}\left\{a_n(-s)^{\frac{m}{2}-n+1}[(-s)^{2n}+1]-ib_n(-s)^{\frac{m}{2}-n+1}[(-s)^{2n}-1]\right\}}{-2s(1-s^4)\prod_{g=1}^{m/2}\sqrt{s^4-2s^2\cos 2\theta_g+1}} \tag{27}$$

The circulation (eq. (20)) is determined by setting Γ equal to the real parts of equations (26) and (27) while the nonexistence of sources is assured by setting the imaginary parts of equations (26) and (27) equal to zero. The condition on the potential (eq. (19)) is satisfied by letting $z=e^{i\theta}$ in equation (14), so as to obtain the velocity along the panel streamline, which is a convenient streamline to use for the evaluation of equation (19). Equation (19) then becomes

$$0=\int_{panel}\frac{\sum_{n=0}^{\frac{m}{2}+1}(a_n\cos n\theta-ib_n\sin n\theta)\,d\theta}{(1-2s^2\cos 2\theta+s^4)\prod_{g=1}^{m/2}\sqrt{\cos^2\theta-\cos^2\theta_g}} \tag{28}$$

where the notation $\int_{panel}$ indicates integration over a panel. Separate equations are then obtained, one for each panel. The constants a_n and b_n can now be evaluated by considering equations (26), (27), and (28) as a set of simultaneous equations in a_n and b_n.

In solving equations (26) to (28) for a_n, it is observed that a new constant α_n appears; thus,

$$a_n=\alpha_n\frac{s\Gamma(1-s^4)}{\pi 2^{\frac{m}{2}-1}}\prod_{g=1}^{m/2}\sqrt{s^4-2s^2\cos 2\theta_g+1} \tag{29}$$

A corresponding relation between b_n and a new constant β_n also appears. With the substitution of these new constants α_n and β_n, equation (25) may be written

$$\frac{dw}{dz}=\frac{ps\Gamma(1-s^4)\prod_{g=1}^{m/2}\sqrt{s^4-2s^2\cos 2\theta_g+1}}{\pi(z^2-s^2)(1-z^2s^2)\prod_{g=1}^{m/2}\sqrt{z^4-2z^2\cos 2\theta_g+1}}\sum_{n=0}^{\frac{m}{2}+1}\left[\alpha_nz^{\frac{m}{2}-n+1}(z^{2n}+1)-i\beta_nz^{\frac{m}{2}-n+1}(z^{2n}-1)\right] \tag{30}$$

and equations (26), (27), and (28) become, respectively,

$$-\frac{i}{p}=\sum_{n=0}^{\frac{m}{2}+1}\left[\alpha_n s^{\frac{m}{2}-n+1}(s^{2n}+1)-i\beta_n s^{\frac{m}{2}-n+1}(s^{2n}-1)\right] \tag{31a}$$

$$-\frac{i}{p}=\sum_{n=0}^{\frac{m}{2}+1}\left\{\alpha_n(-s)^{\frac{m}{2}-n+1}[(-s)^{2n}+1]-i\beta_n(-s)^{\frac{m}{2}-n+1}[(-s)^{2n}-1]\right\} \tag{31b}$$

$$0=\int_{panel}\frac{\sum_{n=0}^{\frac{m}{2}+1}(\alpha_n\cos n\theta-i\beta_n\sin n\theta)\,d\theta}{(1-2s^2\cos 2\theta+s^4)\prod_{g=1}^{m/2}\sqrt{\cos^2\theta-\cos^2\theta_g}} \tag{31c}$$

Examination of equations (31) shows that a number of the α_n's and β_n's are equal to zero. This is shown by first considering the nature of the simultaneous equations (31). The equating of the real and imaginary parts divides the entire set into two separate sets of simultaneous equations, one of which involves α_n's only and the other β_n's only. When p is chosen, one of the sets will be homogeneous whereas the other set will contain two equations with constant terms equal to -1. Thus, one set of constants becomes equal to zero whereas the other set has values which may be different from zero. This remaining set of equations can be reduced by considering the values of the integrals across any one of the panels and its counterpart which is symmetrically located with respect to the y-axis. It can be shown that these integrals will have the same absolute values and the same sign if n is even but opposite signs if n is odd. The same feature is also observed in comparing equations (31a) and (31b); that is, if $\frac{m}{2}-n+1$ is odd, then the terms which contain b to that power will have opposite signs whereas the remaining terms will have the same signs. By adding or subtracting equations (31a) and (31b) and the equations for the integrals across each of the symmetrically located panels, the set of equations in α_n (or in β_n) may be reduced to two new sets, one of which contains the odd values of n and the other the even values of n. Again one of these sets is homogeneous, and one equation of the other set has a constant term equal to -1 so that all the constants associated with either the odd values of n or the even values of n will be equal to zero and the other set will have values which can be different from zero.

This analysis shows that one of four sets of constants α_{2j}, α_{2j+1}, β_{2j}, and β_{2j+1} can occur, so that four different symmetrical slot configurations are suggested. The possible symmetrical configurations which can occur are (case I) panels intersecting both axes, (case II) slots intersecting both axes, (case III) a panel intersecting the x-axis and a slot intersecting the y-axis, and (case IV) a slot intersecting the x-axis and a panel intersecting the y-axis. These conditions are found to occur when the tunnel has $4j$ slots with p equal to i (case I) or 1 (case II) or $2(2j+1)$ slots with p equal to i (case III) or 1 (case IV). Since there are four sets of constants and four different symmetrical slot configurations, it is to be expected that each set of constants can be associated with one of the symmetrical slot configurations. When equations (31) are set up for each of the symmetrical slot configurations, the following associations are found to exist:

Case I (panels intersecting both axes): the α_{2j+1} set has values different from zero.

Case II (slots intersecting both axes): the β_{2j+1} set has values different from zero.

Case III (panel intersecting the x-axis and slot intersecting the y-axis): the α_{2j} set has values different from zero.

Case IV (slot intersecting the x-axis and panel intersecting the y-axis): the β_{2j} set has values different from zero.

Equations (30) and (31) can now be written by using only the constants which may have values other than zero. However, equations (30) and (31) can be written in a more symmetrical form if the solution is carried a step further. The equations for the set of constants that are used for a given configuration may be written, by using the set α_{2j+1} as an example,

$$\left.\begin{aligned}-1&=\alpha_1\gamma_{01}+\alpha_3\gamma_{03}+\ldots\alpha_{2j+1}\gamma_{0,2j+1}\\0&=\alpha_1\gamma_{11}+\alpha_3\gamma_{13}+\ldots\alpha_{2j+1}\gamma_{1,2j+1}\\0&=\alpha_1\gamma_{21}+\alpha_3\gamma_{23}+\ldots\alpha_{2j+1}\gamma_{2,2j+1}\end{aligned}\right\} \tag{32}$$

where the γ's are the corresponding functions of θ_g and s. Now consider as a matrix the coefficients of the right-hand side of the equations whose constant terms are equal to zero, and let A_1, A_3, A_5, . . . be equal to the determinants, respectively, which remain after the column that corresponds to the number $2j+1$ of the constant A_{2j+1} is removed. Then, using Cramer's rule,

$$\left.\begin{aligned}\alpha_1&=\frac{-A_1}{A_1\gamma_{01}-A_3\gamma_{03}+\ldots(-1)^jA_{2j+1}\gamma_{0,2j+1}}\\\alpha_3&=\frac{A_3}{A_1\gamma_{01}-A_3\gamma_{03}+\ldots(-1)^jA_{2j+1}\gamma_{0,2j+1}}\end{aligned}\right\} \tag{33}$$

with corresponding equations for the remaining values of α_{2j+1}.

When the solution for each constant (eq. (33)) is substituted into equation (30), it can be written

$$\frac{dw}{dz}=\frac{-pb\Gamma(1-s^4)\prod_{g=1}^{m/2}\sqrt{s^4-2s^2\cos 2\theta_g+1}}{\pi(z^2-s^2)(1-z^2s^2)\prod_{g=1}^{m/2}\sqrt{z^4-2z^2\cos 2\theta_g+1}}f(z) \tag{34}$$

where $f(z)$ is determined by one of the following equations, the choice depending upon the symmetry of the desired slot configuration:

For case I, or panels intersecting both axes,

$$f(z)=\frac{\sum_{j=0}^{m/4}(-1)^j A_{2j+1} z^{\frac{m}{2}-2j}[z^{2(2j+1)}+1]}{\sum_{j=0}^{m/4}(-1)^j A_{2j+1} s^{\frac{m}{2}-2j}[s^{2(2j+1)}+1]} \tag{35a}$$

For case II, or slots intersecting both axes (note that in this case as well as in case IV, B has the same relation to β as A has to α in the demonstrated case),

$$f(z)=\frac{i\sum_{j=0}^{m/4}(-1)^j B_{2j+1} z^{\frac{m}{2}-2j}[z^{2(2j+1)}-1]}{\sum_{j=0}^{m/4}(-1)^j B_{2j+1} s^{\frac{m}{2}-2j}[s^{2(2j+1)}-1]} \tag{35b}$$

For case III, or a panel intersecting the x-axis and a slot intersecting the y-axis,

$$f(z)=\frac{\sum_{j=0}^{\frac{m+2}{4}}(-1)^j A_{2j} z^{\frac{m}{2}-2j+1}(z^{4j}+1)}{\sum_{j=0}^{\frac{m+2}{4}}(-1)^j A_{2j} s^{\frac{m}{2}-2j+1}(s^{4j}+1)} \tag{35c}$$

For case IV, or a slot intersecting the x-axis and a panel intersecting the y-axis,

$$f(z)=\frac{i\sum_{j=0}^{\frac{m+2}{4}}(-1)^j B_{2j} z^{\frac{m}{2}-2j+1}(z^{4j}-1)}{\sum_{j=0}^{\frac{m+2}{4}}(-1)^j B_{2j} s^{\frac{m}{2}-2j+1}(s^{4j}-1)} \tag{35d}$$

The constants A_{2j+1}, B_{2j+1}, A_{2j}, and B_{2j} are determined from the following matrices in the manner discussed in the material following equation (32). The matrix for case I is

$$\begin{bmatrix} \int_{-\theta_1}^{\theta_1}\frac{\cos\theta\,d\theta}{f_1(\theta)} & \int_{-\theta_1}^{\theta_1}\frac{\cos 3\theta\,d\theta}{f_1(\theta)} & \cdots & \int_{-\theta_1}^{\theta_1}\frac{\cos\left(\frac{m}{2}+1\right)\theta\,d\theta}{f_1(\theta)} \\ \int_{\theta_2}^{\theta_3}\frac{\cos\theta\,d\theta}{f_1(\theta)} & \cdot & \cdots & \cdot \\ \cdot & \cdot & \cdots & \cdot \\ \cdot & \cdot & \cdots & \cdot \\ \cdot & \cdot & \cdots & \cdot \\ \int_{\theta_{\frac{m}{2}-2}}^{\theta_{\frac{m}{2}-1}}\frac{\cos\theta\,d\theta\,d\theta}{f_1(\theta)} & \cdot & \cdots & \cdot \end{bmatrix} \tag{36a}$$

where

$$f_1(\theta)=(1-2s^2\cos 2\theta+s^4)\prod_{g=1}^{m/2}\sqrt{\cos^2\theta-\cos^2\theta_g}$$

The matrix for case II is

$$\begin{bmatrix} \int_{\theta_1}^{\theta_2}\frac{\sin\theta\,d\theta}{f_2(\theta)} & \int_{\theta_1}^{\theta_2}\frac{\sin 3\theta\,d\theta}{f_2(\theta)} & \cdots & \int_{\theta_1}^{\theta_2}\frac{\sin\left(\frac{m}{2}+1\right)\theta\,d\theta}{f_2(\theta)} \\ \int_{\theta_3}^{\theta_4}\frac{\sin\theta\,d\theta}{f_2(\theta)} & \cdot & \cdots & \cdot \\ \cdot & \cdot & \cdots & \cdot \\ \cdot & \cdot & \cdots & \cdot \\ \cdot & \cdot & \cdots & \cdot \\ \int_{\theta_{\frac{m}{2}-1}}^{\theta_{m/2}}\frac{\sin\theta\,d\theta}{f_2(\theta)} & \cdot & \cdots & \cdot \end{bmatrix} \tag{36b}$$

where

$$f_2(\theta)=(1-2s^2\cos 2\theta+s^4)\prod_{g=1}^{m/2}\sqrt{\cos^2\theta_g-\cos^2\theta}$$

The matrix for case III is

$$\begin{bmatrix} \int_{-\theta_1}^{\theta_1}\frac{d\theta}{f_1(\theta)} & \int_{-\theta_1}^{\theta_1}\frac{\cos 2\theta\,d\theta}{f_1(\theta)} & \cdots & \int_{-\theta_1}^{\theta_1}\frac{\cos\left(\frac{m}{2}+1\right)\theta}{f_1(\theta)} \\ \int_{\theta_2}^{\theta_3}\frac{d\theta}{f_1(\theta)} & \cdot & \cdots & \cdot \\ \cdot & \cdot & \cdots & \cdot \\ \cdot & \cdot & \cdots & \cdot \\ \cdot & \cdot & \cdots & \cdot \\ \int_{\theta_{\frac{m}{2}-1}}^{\theta_{m/2}}\frac{d\theta}{f_1(\theta)} & \cdot & \cdots & \cdot \end{bmatrix} \tag{36c}$$

where

$$f_1(\theta)=(1-2s^2\cos 2\theta+s^4)\prod_{g=1}^{m/2}\sqrt{\cos^2\theta-\cos^2\theta_g}$$

The matrix for case IV is

$$\begin{bmatrix} \int_{\theta_1}^{\theta_2}\frac{\sin 2\theta\,d\theta}{f_2(\theta)} & \int_{\theta_1}^{\theta_2}\frac{\sin 4\theta\,d\theta}{f_2(\theta)} & \cdots & \int_{\theta_1}^{\theta_2}\frac{\sin\left(\frac{m}{2}+1\right)\theta\,d\theta}{f_2(\theta)} \\ \int_{\theta_3}^{\theta_4}\frac{\sin 2\theta\,d\theta}{f_2(\theta)} & \cdot & \cdots & \cdot \\ \cdot & \cdot & \cdots & \cdot \\ \cdot & \cdot & \cdots & \cdot \\ \cdot & \cdot & \cdots & \cdot \\ \int_{\theta_{\frac{m}{2}-2}}^{\theta_{\frac{m}{2}-1}}\frac{\sin 2\theta\,d\theta}{f_2(\theta)} & \cdot & \cdots & \cdot \end{bmatrix} \tag{36d}$$

where

$$f_2(\theta)=(1-2s^2\cos 2\theta+s^4)\prod_{g=1}^{mf2}\sqrt{\cos^2\theta_g-\cos^2\theta}$$

Solution for symmetrically loaded wings.—Symmetrically loaded wings can be assumed to be made up of vortex pairs of circulation $-d\Gamma$ and $d\Gamma$. Since the circulation can be expressed as $\Gamma_0 f(x)$ where Γ_0 is the circulation at the point $x=0$, the strength of each pair becomes

$$d\Gamma=\Gamma_0 f'(x)dx \tag{37}$$

This value of the circulation may be substituted into equation (34) to give the contribution of each elemental vortex to the total flow. It is then necessary to integrate the equation over the entire span to obtain the flow, or

$$\left(\frac{dw}{dz}\right)_N=\Gamma_0\int_{-s}^{s}f'(x)\left(\frac{dw}{dz}\right)_U dx \tag{38}$$

where $(dw/dz)_N$ is the complex velocity of the nonuniformly loaded wing, and $(dw/dz)_U$ is the complex velocity (eq. (34)) of the uniformly loaded wing with x substituted for s and a circulation of unity.

Corrections for interference due to lift.—The interference complex-velocity field at the far-downstream position is determined by subtracting the complex velocity of the free field from the complex velocity of the constrained field, or

$$\frac{dw_I}{dz}=\frac{dw}{dz}+\frac{is\Gamma}{\pi(z^2-s^2)} \tag{39}$$

A useful parameter which indicates the effect of slotting a tunnel is the ratio of the interference of that tunnel to the interference of a closed tunnel. This parameter, which is the same at the far-downstream position as at the model and which will be called the quality factor k, can be expressed mathematically as follows:

$$k=\frac{\dfrac{dw}{dz}+\dfrac{is\Gamma}{\pi(z^2-s^2)}}{\dfrac{dw_C}{dz}+\dfrac{is\Gamma}{\pi(z^2-s^2)}} \tag{40}$$

where dw_C/dz is the complex velocity of the closed-tunnel configuration.

Once the values of k are determined as a function of the semispan s for a specific tunnel, the interference can be calculated. It is shown in reference 7 that the interference on the lift can be expressed as an angle which may be added to the measured angle of attack to obtain the true or free-flight angle of attack. Reference 7 gives the correction angle in radians as

$$\epsilon_I=\frac{\delta SC_L}{C} \tag{41}$$

where δ is a factor which is determined from the geometry of the tunnel configuration, S is the wing area, C the tunnel area, and C_L the lift coefficient. Also from reference 7, the increment which must be added to the measured drag to obtain the correct drag is

$$\Delta C_D=\delta\frac{SC_L^2}{C} \tag{42}$$

In the case of the slotted tunnel, it is convenient to use the quality factor k and then express the two corrections as

$$\epsilon_I=k\delta\frac{SC_L}{C} \tag{43}$$

and

$$\Delta C_D=k\delta\frac{SC_L^2}{C} \tag{44}$$

where δ can be determined from the literature on lift interference of closed tunnels.

Solution and interference quality factors for tunnels with cross sections other than circular.—The solution of the wall-interference problem for tunnels having cross sections other than circular can be obtained by following the method of paragraph 14.6, reference 8. This method requires that a function $z=f(\zeta)$ be found which will conformally transform the interior of the tunnel cross section in the z-plane into the interior of the unit circle $|\zeta|=1$ in the ζ-plane. It is also necessary that $f'(\zeta)$ does not vanish or become infinite in the unit circle $|\zeta|=1$. The complex velocity of the tunnel in the z-plane is then

$$u-iv=\frac{dw}{d\zeta}\frac{d\zeta}{dz} \tag{45}$$

In the function $dw/d\zeta$ of equation (45), the θ_g's which determine the slot edges of the ζ-plane are the transformed values of the slot edges in the z-plane and the values of l in the ζ-plane are also determined from the transformations of the points s in the z-plane. Once these values are determined for the transformed tunnel in the ζ-plane, the velocity field $dw/d\zeta$ in the ζ-plane may be computed. The velocities in the z-plane may then be computed by equation (45).

The interference and the quality factor may now be deduced from equation (45). Subtracting the free field from the complex velocity given in equation (45) gives for the interference velocity

$$\frac{dw_I}{dz}=\frac{dw}{d\zeta}\frac{d\zeta}{dz}+\frac{is\Gamma}{\pi(z^2-s^2)} \tag{46}$$

The interference for any tunnel can be determined from this equation; however, in many cases, the use of a quality factor may be more convenient. The quality factor for this class of tunnels can be written

$$k=\frac{\dfrac{dw}{d\zeta}\dfrac{d\zeta}{dz}+\dfrac{is\Gamma}{\pi(z^2-s^2)}}{\dfrac{dw_C}{d\zeta}\dfrac{d\zeta}{dz}+\dfrac{is\Gamma}{\pi(z^2-s^2)}} \tag{47}$$

where $dw_C/d\zeta$ represents the complex velocity of the transformation of the closed tunnel in the ζ-plane.

A simplification of equation (47) can be made in case the transformation $f(\zeta)$ may be approximated by $c\zeta$ for points near the center of the tunnel. If s is sufficiently small, its value in the ζ-plane may therefore be represented by $s=cl$,

where l represents the distance to the point which locates the transformation of the tip vortex in the ζ-plane. Substituting these approximations into equation (47) gives for the quality factor:

$$k=\frac{\dfrac{dw}{d\zeta}\dfrac{1}{c}+\dfrac{icl\Gamma}{\pi(c^2\zeta^2-c^2l^2)}}{\dfrac{dw_C}{d\zeta}\dfrac{1}{c}+\dfrac{icl\Gamma}{\pi(c^2\zeta^2-c^2l^2)}}=\frac{\dfrac{dw}{d\zeta}+\dfrac{il\Gamma}{\pi(\zeta^2-l^2)}}{\dfrac{dw_C}{d\zeta}+\dfrac{il\Gamma}{\pi(\zeta^2-l^2)}} \tag{48}$$

Equation (48) shows that the quality factor near the center of the original tunnel in the z-plane is approximately equal to the quality factor of the corresponding circular tunnel in the ζ-plane. Thus, to obtain the interference, only the quality factor of the circular tunnel needs to be computed, provided the interference of the original closed tunnel is known and the approximation $z=cl$ is valid throughout the region in which the model is located.

APPLICATIONS OF THEORY TO VARIOUS TUNNELS

Two slots located symmetrically across the x-axis.—Tunnels which have two slots located symmetrically across the x-axis (fig. 2(a)) are treated under case IV. Thus, their complex velocity field may be expressed by equation (34) and equation (35d) where j takes the values 0 and 1. Since the integrals across the two panels are identically zero, the matrix of the integrals has no meaning and hence is not used. With these considerations the complex velocity may now be written

$$\frac{dw}{dz}=-\frac{is\Gamma(1-s^4)\sqrt{s^4-2s^2\cos 2\theta_1+1}\,B_2(z^4-1)}{\pi(z^2-s^2)(1-z^2s^2)\sqrt{z^4-2z^2\cos 2\theta_1+1}\,B_2(s^4-1)} \tag{49}$$

The wall interference is determined by subtracting the complex velocity for the free field from equation (49), or

$$\frac{dw_I}{dz}=-\frac{is\Gamma}{\pi(z^2-s^2)}\left[\frac{(1-z^4)\sqrt{s^4-2s^2\cos 2\theta_1+1}}{(1-z^2s^2)\sqrt{z^4-2z^2\cos 2\theta_1+1}}-1\right] \tag{50}$$

The quality factor k is determined by dividing equation (50) by the closed-tunnel interference which is

$$-\frac{is\Gamma}{\pi(z^2-s^2)}\left[\frac{(1-s^2)(1+z^2)}{1-z^2s^2}-1\right] \tag{51}$$

or

$$k=\frac{\dfrac{(1-z^4)\sqrt{s^4-2s^2\cos 2\theta_1+1}}{(1-z^2s^2)\sqrt{z^4-2z^2\cos 2\theta_1+1}}-1}{\dfrac{(1-s^2)(1+z^2)}{(1-z^2s^2)}-1} \tag{52}$$

This function can be written

$$k=\frac{(1-z^4)\sqrt{s^4-2s^2\cos 2\theta_1+1}-(1-z^2s^2)\sqrt{z^4-2z^2\cos 2\theta_1+1}}{(z^2-s^2)\sqrt{z^4-2z^2\cos 2\theta_1+1}} \tag{53}$$

The effects of the slots on the interference along the span of the model are obtained by substituting x for z; then,

$$k=\frac{(1-x^4)\sqrt{s^4-2s^2\cos 2\theta_1+1}-(1-x^2s^2)\sqrt{x^4-2x^2\cos 2\theta_1+1}}{(x^2-s^2)\sqrt{x^4-2x^2\cos 2\theta_1+1}} \tag{54}$$

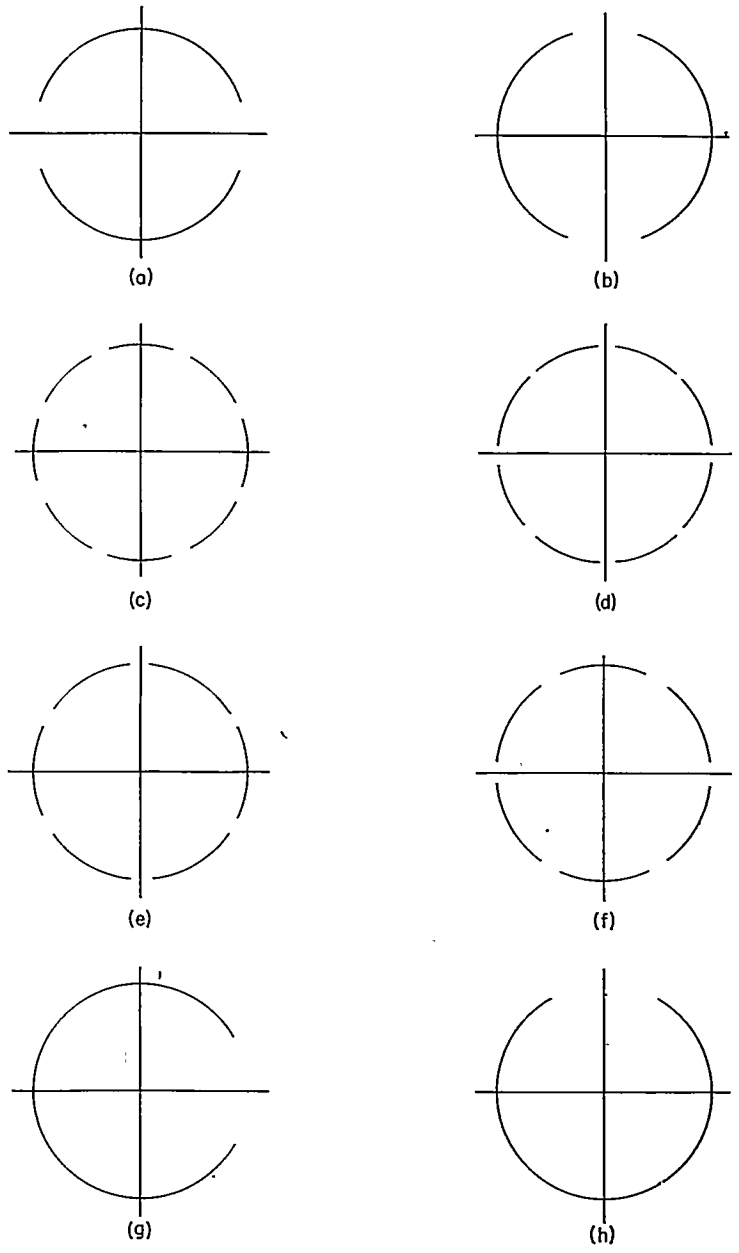

(a) Case IV; 2 slots, $p=1$.
(b) Case III; 2 slots, $p=i$.
(c) Case I; $4j$ slots, $p=i$.
(d) Case II; $4j$ slots, $p=1$.
(e) Case III; $2(2j+1)$ slots, $p=i$.
(f) Case IV; $2(2j+1)$ slots, $p=1$.
(g) Single slot.
(h) Single slot.

FIGURE 2.—Various symmetrical slot configurations investigated for the lift interference.

If x and s are sufficiently small so that the approximation

$$\sqrt{x^4-2x^2\cos 2\theta_1+1}=1-x^2\cos 2\theta_1+\frac{x^4}{2}\sin^2 2\theta_1$$

is valid, then

$$k=\frac{2\cos 2\theta_1-2x^2-(x^2+s^2)\sin^2 2\theta_1}{2-2x^2\cos 2\theta_1+x^4\sin^2 2\theta_1} \tag{55}$$

The quality factor is seen to be insensitive to values of either x or s, so that for this tunnel with relatively small models ($s=0.25$ or less) the effect of slotting the tunnel on the lift

of any model may be obtained by multiplying the closed-tunnel interference for that model by the slotted-tunnel quality factor.

Pistolesi (ref. 5) shows that the interference quality factor for this tunnel with a vortex doublet in the center is, in the notation of this report, $\cos 2\theta_1$. Equation (55) reduces to the same value when x and b are set equal to zero.

Two slots located symmetrically across the y-axis.—Tunnels which have two slots located symmetrically across the y-axis (fig. 2(b)) are treated under case III (see eq. (35c)). Thus, their complex velocity may be expressed by equation (34) with $f(z)$ given by expression (35c), so that it can be written

$$\frac{dw}{dz}=\frac{-is\Gamma(1-s^4)\sqrt{s^4-2s^2\cos 2\theta_1+1}\,[2A_0z^2-A_2(1+z^4)]}{\pi(z^2-s^2)(1-z^2s^2)\sqrt{z^4-2z^2\cos 2\theta_1+1}\,[2A_0s^2-A_2(1+s^4)]} \tag{56}$$

where A_0 and A_2 are determined from the matrix (36c) and are

$$A_0=\int_{-\theta_1}^{\theta_1}\frac{\cos 2\theta\, d\theta}{(1-2s^2\cos 2\theta+s^4)\sqrt{\cos^2\theta-\cos^2\theta_1}} \tag{57}$$

$$A_2=\int_{-\theta_1}^{\theta_1}\frac{d\theta}{(1-2s^2\cos 2\theta+s^4)\sqrt{\cos^2\theta-\cos^2\theta_1}} \tag{58}$$

If z and s are considered small, the complex velocity of this field may be approximated by

$$\frac{dw_I}{dz}=\frac{is\Gamma}{\pi}\,\frac{(A_2s^2-2A_0)+(1-s^4)(A_2-2A_0z^2)\cos 2\theta_1}{(A_2-2A_0s^2)(1-z^2s^2)} \tag{59}$$

from which the quality factor becomes approximately

$$k=\frac{(A_2s^2-2A_0)+(1-s^4)(A_2-2A_0z^2)\cos 2\theta_1}{A_2-2A_0s^2} \tag{60}$$

which reduces for $z=s=0$ to

$$k=-\frac{2A_0}{A_2}+\cos 2\theta_1 \tag{61}$$

This quality factor is the same as the one presented in reference 5, with the necessary change of sign to adapt it to the notation of this report.

Tunnel with $4j$ slots located symmetrically with respect to the x- and y-axes.—Tunnels with $4j$ slots located symmetrically with respect to the x- and y-axes can have either the symmetry of case I (eq. (35a), fig. 2(c)), if panels intersect both axes, or of case II (eq. (35b), fig. 2(d)), if slots intersect both axes. Thus, the complex velocity can be expressed by equation (34) with $f(z)$ given by either equation (35a) or (35b), depending on the desired slot configuration. As an example, the complex velocity for a tunnel containing four slots with panels intersecting both axes may be written

$$\frac{dw}{dz}=\frac{-is\Gamma(1-s^4)\left(\prod_{g=1}^{2}\sqrt{s^4-2s^2\cos 2\theta_g+1}\right)[A_1z^2(z^2+1)-A_3(z^6+1)]}{\pi(z^2-s^2)(1-z^2s^2)\left(\prod_{g=1}^{2}\sqrt{z^4-2z^2\cos 2\theta_g+1}\right)[A_1s^2(s^2+1)-A_3(s^6+1)]} \tag{62}$$

where A_1 and A_3 are determined from equation (36a) and are expressed as

$$A_1=\int_{-\theta_1}^{\theta_1}\frac{\cos 3\theta\, d\theta}{(1-2s^2\cos 2\theta+s^4)\prod_{g=1}^{2}\sqrt{\cos^2\theta-\cos^2\theta}} \tag{63a}$$

and

$$A_3=\int_{-\theta_1}^{\theta_1}\frac{\cos\theta\, d\theta}{(1-2s^2\cos 2\theta+s^4)\prod_{g=1}^{2}\sqrt{\cos^2\theta-\cos^2\theta_g}} \tag{63b}$$

If the tunnel contains eight slots with panels intersecting both axes,

$$\frac{dw}{dz}=\frac{-is\Gamma(1-s^4)\prod_{g=1}^{4}\sqrt{s^4-2s^2\cos 2\theta_g+1}}{\pi(z^2-s^2)(1-z^2s^2)\prod_{g=1}^{4}\sqrt{z^4-2z^2\cos 2\theta_g+1}}\times$$

$$\frac{A_1z^4(z^2+1)-A_3z^2(z^6+1)+A_5(z^{10}+1)}{A_1s^4(s^2+1)-A_3s^2(s^6+1)+A_5(s^{10}+1)} \tag{64}$$

where A_1, A_3, and A_5 are equal to the determinants remaining when the first, second, and third columns, respectively, are removed from the following matrix:

$$\begin{bmatrix} \int_{-\theta_1}^{\theta_1}\frac{\cos\theta\, d\theta}{f_1(\theta)} & \int_{-\theta_1}^{\theta_1}\frac{\cos 3\theta\, d\theta}{f_1(\theta)} & \int_{-\theta_1}^{\theta_1}\frac{\cos 5\theta\, d\theta}{f_1(\theta)} \\ \int_{\theta_2}^{\theta_3}\frac{\cos\theta\, d\theta}{f_1(\theta)} & \int_{\theta_2}^{\theta_3}\frac{\cos 3\theta\, d\theta}{f_1(\theta)} & \int_{\theta_2}^{\theta_3}\frac{\cos 5\theta\, d\theta}{f_1(\theta)} \end{bmatrix} \tag{65a}$$

where

$$f_1(\theta)=(1-2s^2\cos 2\theta+s^4)\prod_{g=1}^{4}\sqrt{\cos^2\theta-\cos^2\theta_g} \tag{65b}$$

If the tunnel contains 12 slots with panels intersecting both axes,

$$\frac{dw}{dz}=\frac{-is\Gamma(1-s^4)\prod_{g=1}^{6}\sqrt{s^4-2s^2\cos 2\theta_g+1}}{\pi(z^2-s^2)(1-z^2s^2)\prod_{g=1}^{6}\sqrt{z^4-2z^2\cos 2\theta_g+1}}\times$$

$$\frac{A_1z^6(z^2+1)-A_3z^4(z^6+1)+A_5z^2(z^{10}+1)-A_7(z^{14}+1)}{A_1s^6(s^2+1)-A_3s^4(s^6+1)+A_5s^2(s^{10}+1)-A_7(s^{14}+1)} \tag{66}$$

where A_1, A_3, A_5, and A_7 are equal to the determinants remaining when the first, second, third, or fourth columns, respectively, are removed from the following matrix:

$$\begin{bmatrix} \int_{-\theta_1}^{\theta_1}\frac{\cos\theta\, d\theta}{f_1(\theta)} & \int_{-\theta_1}^{\theta_1}\frac{\cos 3\theta\, d\theta}{f_1(\theta)} & \int_{-\theta_1}^{\theta_1}\frac{\cos 5\theta\, d\theta}{f_1(\theta)} & \int_{-\theta_1}^{\theta_1}\frac{\cos 7\theta\, d\theta}{f_1(\theta)} \\ \int_{\theta_2}^{\theta_3}\frac{\cos\theta\, d\theta}{f_1(\theta)} & \int_{\theta_2}^{\theta_3}\frac{\cos 3\theta\, d\theta}{f_1(\theta)} & \int_{\theta_2}^{\theta_3}\frac{\cos 5\theta\, d\theta}{f_1(\theta)} & \int_{\theta_2}^{\theta_3}\frac{\cos 7\theta\, d\theta}{f_1(\theta)} \\ \int_{\theta_4}^{\theta_5}\frac{\cos\theta\, d\theta}{f_1(\theta)} & \int_{\theta_4}^{\theta_5}\frac{\cos 3\theta\, d\theta}{f_1(\theta)} & \int_{\theta_4}^{\theta_5}\frac{\cos 5\theta\, d\theta}{f_1(\theta)} & \int_{\theta_4}^{\theta_5}\frac{\cos 7\theta\, d\theta}{f_1(\theta)} \end{bmatrix} \tag{67a}$$

where

$$f_1(\theta)=(1-2s^2\cos 2\theta+s^4)\prod_{g=1}^{6}\sqrt{\cos^2\theta-\cos^2\theta_g} \tag{67b}$$

If the slots are of equal width and evenly spaced, equations (62), (64), and (66) can be simplified by substituting the terms

$$\sqrt{1-2z^m \cos 2\theta_1+z^{2m}}$$

and

$$\sqrt{1-2s^m \cos 2\theta_1+s^{2m}}$$

for the multiple products in equations (62), (64), and (66), and

$$\sqrt{\cos^2 \frac{m}{2}\theta-\cos^2 \frac{m}{2}\theta_1}$$

for the multiple products in equations (63a), (63b), (65b), and (67b). With these substitutions the limits of the integrals in the second row of the matrix (65a) are changed to $\frac{\pi}{4}-\theta_1$ for the lower limit and $\frac{\pi}{4}+\theta_1$ for the upper limit, and those of the second and third rows in the matrix (67a) are changed to $\frac{\pi}{6}-\theta_1$ and $\frac{\pi}{3}-\theta_1$ for the lower limits and $\frac{\pi}{6}+\theta_1$ and $\frac{\pi}{3}+\theta_1$ for the upper limits.

The interference in these tunnels is obtained by computing the velocity and subtracting the free-field velocities, then dividing by ½ since the computed fields are for a great distance downstream and (see ref. 6) the interference velocities at the model are one-half those downstream.

Tunnels with $2(2j+1)$ slots located symmetrically with respect to both axes.—Tunnels with $2(2j+1)$ slots located symmetrically with respect to the x- and y-axes can have the symmetry of slot location of either case III (expression (35c), fig. 2 (e)), with a panel intercepting the x-axis and a slot intercepting the y-axis, or of case IV (expression (35d), fig. 2 (f)), with a slot intercepting the x-axis and a panel intercepting the y-axis. Thus, the complex velocity may be expressed by equation (34) with $f(z)$ given by either equation (35c) or (35d), depending upon the desired configuration. As examples of this class and of the simplification due to evenly spaced slots of equal width, the complex-velocity fields for tunnels containing six evenly spaced slots of equal width can be written for case III, where panels are on the x-axis,

$$\frac{dw}{dz}=\frac{-is\Gamma(1-s^4)\sqrt{s^{12}-2s^6\cos 6\theta_1+1}\,[2A_0z^4-A_2z^2(z^4+1)+A_4(z^8+1)]}{\pi(z^2-s^2)(1-z^2s^2)\sqrt{z^{12}-2z^6\cos 6\theta_1+1}\,[2A_0s^4-A_2s^2(s^4+1)+A_4(s^8+1)]} \tag{68}$$

where A_0, A_2, and A_4 are evaluated from the following matrix by the same methods used in equation (64):

$$\begin{bmatrix} \int_{-\theta_1}^{\theta_1}\frac{d\theta}{f_1(\theta)} & \int_{-\theta_1}^{\theta_1}\frac{\cos 2\theta\, d\theta}{f_1(\theta)} & \int_{-\theta_1}^{\theta_1}\frac{\cos 4\theta\, d\theta}{f_1(\theta)} \\ \int_{\frac{\pi}{3}-\theta_1}^{\frac{\pi}{3}+\theta_1}\frac{d\theta}{f_1(\theta)} & \int_{\frac{\pi}{3}-\theta_1}^{\frac{\pi}{3}+\theta_1}\frac{\cos 2\theta\, d\theta}{f_1(\theta)} & \int_{\frac{\pi}{3}-\theta_1}^{\frac{\pi}{3}+\theta_1}\frac{\cos 4\theta\, d\theta}{f_1(\theta)} \end{bmatrix} \tag{69a}$$

where

$$f_1(\theta)=(1-2s^2\cos 2\theta+s^4)\sqrt{\cos^2 3\theta-\cos^2 3\theta_1} \tag{69b}$$

For case IV (fig. 2 (f)), where slots are on the x-axis,

$$\frac{dw}{dz}=\frac{-is\Gamma(1-s^4)\sqrt{s^{12}-2s^6\cos 6\theta_1+1}\,[B_2z^2(z^4-1)-B_4(z^8-1)]}{\pi(z^2-s^2)(1-z^2s^2)\sqrt{z^{12}-2z^6\cos 6\theta_1+1}\,[B_2s^2(s^4-1)-B_4(s^8-1)]} \tag{70}$$

where B_4 and B_2 are determined from equation 36 (d) and are expressed as

$$B_4=\int_{\theta_1}^{\frac{\pi}{3}-\theta_1}\frac{\sin 2\theta\, d\theta}{(1-2s^2\cos 2\theta+s^4)\sqrt{\cos^2 3\theta_1-\cos^2 3\theta}} \tag{71a}$$

and

$$B_2=\int_{\theta_1}^{\frac{\pi}{3}-\theta_1}\frac{\sin 4\theta\, d\theta}{(1-2s^2\cos 2\theta+s^4)\sqrt{\cos^2 3\theta_1-\cos^2 3\theta}} \tag{71b}$$

The interferences are determined as in the previous sections.

Equations (68) and (70) may be extended to 10, 14, . . . $4j+2$ slots in the same manner that equation (62) was extended to include 8 and 12 slots.

Single slot located symmetrically across the x-axis.—Since tunnels which have a single slot located symmetrically across the x-axis (fig. 2 (g)) contain an odd number of slots, summation (17) rather than (11) must be used in equation (14), which, when expressed for a single slot, becomes

$$\frac{dw}{dz}=\frac{z\sum_{n=0}^{1}\left(a_n\cos\frac{2n+1}{2}\vartheta+b_n\sin\frac{2n+1}{2}\vartheta\right)}{(z^2-s^2)(1-z^2s^2\sqrt{\cos\vartheta-\cos\theta_1}} \tag{72}$$

Equation (72) may be rewritten, with several modifications after substituting $z=e^{i\vartheta}$, as

$$\frac{dw}{dz}=\frac{a_0z(1+z)+a_1(1+z^2)+i[b_0z(1-z)+b_1(1-z^2)]}{\sqrt{2}\,(z^2-s^2)(1-z^2s^2)\sqrt{1-2z\cos\theta_1+z^2}} \tag{73}$$

The constants in this case must be evaluated from the circulation about the poles at s and $-s$ and the nonexistence of sources at those points, as the potential condition is automatically satisfied because the potential is constant across a single slot. The circulation and nonexistence of sources (eqs. (27) and (28)) may be expressed about the pole s as

$$\Gamma+i\sigma=\frac{2\pi i\{a_0s(1+s)+a_1(1+s^2)+i[b_0s(1-s)+b_1(1-s^2)]\}}{\sqrt{2}\,2s(1-s^4)\sqrt{1-2s\cos\theta_1+s^2}} \tag{74a}$$

and about the pole $-s$ as

$$\Gamma+i\sigma=\frac{2\pi i\{a_0(-s)(1-s)+a_1(1+s^2)+i[b_0(-s)(1+s)+b_1(1-s^2)]\}}{\sqrt{2}(-2s)(1-s^4)\sqrt{1+2s\cos s_1+s^2}} \tag{74b}$$

If there are to be no sources at the poles, σ must equal zero. It may be seen from inspection that a_0 and a_1 are equal to zero and that b_0 and b_1 have solutions other than zero. When these solutions for b_0 and b_1 are substituted into equation (73), it becomes

$$\frac{dw}{dz}=\frac{-is\Gamma}{2s\pi(z^2-s^2)(1-z^2s^2)\sqrt{1-2z\cos\theta_1+z^2}}\Big\{[s(1+s)\sqrt{1-2s\cos\theta_1+s^2}+s(1-s)\sqrt{1+2s\cos\theta_1+s^2}]\,z(1-z)+$$
$$[-(1-s^3)\sqrt{1+2s\cos\theta_1+s^2}+(1+s^3)\sqrt{1-2s\cos\theta_1+s^2}](1-z^3)\Big\} \tag{75}$$

The interference velocity is determined as before by subtracting the free-field velocity $-is\Gamma/\pi(z^2-s^2)$; hence, the interference complex velocity is

$$\frac{dw_I}{dz}=\frac{-is\Gamma}{2s\pi(z^2-s^2)(1-z^2s^2)\sqrt{1-2z\cos\theta_1+z^2}}\Big\{[s(1+s)\sqrt{1-2s\cos\theta_1+s^2}+s(1-s)\sqrt{1+2s\cos\theta_1+s^2}]\,z(1-z)+$$
$$[(1+s^3)\sqrt{1-2s\cos\theta_1+s^2}-(1-s^3)\sqrt{1+2s\cos\theta_1+s^2}](1-z^3)-2s(1-z^2s^2)\sqrt{1-2z\cos\theta_1+z^2}\Big\} \tag{76}$$

The quality factor k is determined by dividing equation (76) by the closed-tunnel interference velocity, which is $-is\Gamma/\pi(1-z^2s^2)$. After performing this operation and combining a number of terms, the quality factor k may be written

$$k=\frac{1}{2s(z^2-s^2)\sqrt{1-2z\cos\theta_1+z^2}}[(1+s)(1-z)(z+s)(1+zs)\sqrt{1-2s\cos\theta_1+s^2}-(1-s)(1-z)(z-s)(1-zs)\sqrt{1+2s\cos\theta_1+s^2}-$$
$$2s(1-z^2s^2)\sqrt{1-2z\cos\theta_1+z^2}] \tag{77}$$

This factor can be checked by letting $\theta_1=0°$, which represents a closed tunnel, for which k can be shown to be equal to $+1$; and if $\theta_1=180°$, which represents the open tunnel, then k can be shown to be equal to -1.

Equation (77) can be considerably simplified by using the following approximations, in which z (or s) is assumed to be small with respect to 1:

$$\sqrt{1-2z\cos\theta_1+z^2}=1-z\cos\theta_1+z^2\frac{\sin^2\theta_1}{2} \tag{78}$$

and

$$\sqrt{1+2s\cos\theta_1+s^2}=1+s\cos\theta_1+s^2\frac{\sin^2\theta_1}{2} \tag{79}$$

After multiplication and collection of terms, equation (77) simplifies with the use of equations (78) and (79) to

$$k=\frac{\cos\theta_1-\frac{\sin^2\theta_1}{2}-z\left[1+s^2\left(1-\frac{s\sin^2\theta_1}{2}\right)\right]}{1-z\cos\theta_1+z^2\frac{\sin^2\theta_1}{2}} \tag{80}$$

If terms of the order z^2 and higher are eliminated, equation (80) may be approximated with

$$k=-\frac{1}{2}\{1-2\cos\theta_1-\cos^2\theta_1+z[2s^2+(2-\cos\theta_1)\sin^2\theta_1]\} \tag{81}$$

Equation (81) shows that the interference of this tunnel has an odd function component along the x-axis which will produce a variation in the effective angle of attack that will cause the model to have a rolling moment. Since extension of flow fields of this type (an odd number of slots symmetrically located with respect to the x-axis) to greater numbers of slots will not eliminate the odd powers of z, the rolling moments will continue to exist. It is therefore to be concluded that tunnels containing an odd number of slots symmetrically located with respect to the x-axis introduce an extraneous moment into the data.

Single slot located symmetrically across the y-axis.—For tunnels which have a single slot located symmetrically across the y-axis (fig. 2(h)) summation (17) is again used rather than (11) because of the odd number of slots. This summation when used in equation (15) results in the proper slot symmetry, and the complex velocity can therefore be expressed as

$$\frac{dw}{dz}=\frac{z}{(z^2-s^2)(1-z^2s^2)}\,\frac{a_0\cos\frac{\vartheta}{2}+a_1\cos\frac{3\vartheta}{2}+b_0\sin\frac{\vartheta}{2}+b_1\sin\frac{3\vartheta}{2}}{\sqrt{\sin\vartheta-\sin\theta_1}} \tag{82}$$

Since $z=e^{i\vartheta}$, the complex velocity may be rewritten after substitution and combining various terms as

$$\frac{dw}{dz}=\frac{(1+i)[a_0z(1+z)+a_1(1+z^3)+b_0iz(1-z)+b_1i(1-z^3)]}{2(z^2-s^2)(1-z^2s^2)\sqrt{1-2iz\sin\theta_1-z^2}} \tag{83}$$

The constants a_0, a_1, b_0, and b_1 must now be evaluated from the circulation about each of the poles and the condition of continuity. The two conditions about each pole may be expressed as

$$\Gamma+i\sigma=\frac{2\pi i(1+i)[a_0s(1+s)+a_1(1+s^3)+b_0is(1-s)+b_1i(1-s^3)]}{4s(1-s^4)\sqrt{1-2is\sin\theta_1-s^2}} \tag{84a}$$

about the pole s and

$$-\Gamma+i\sigma=\frac{2\pi i(1+i)[-a_0s(1-s)+a_1(1-s^3)-b_0is(1+s)+b_1i(1+s^3)]}{-4s(1-s^4)\sqrt{1+2is\sin\theta_1-s^2}} \tag{84b}$$

about the pole $-s$. The strength σ must equal zero in order to satisfy the condition of nonexistence of sources. In order to simplify the rationalization of equations (84), the following substitutions are made:

$$\left.\begin{aligned} C+iD&=\sqrt{1-s^2+2is\sin\theta_1}\\ C-iD&=\sqrt{1-s^2-2is\sin\theta_1}\end{aligned}\right\} \tag{85a}$$

Also let

$$\left.\begin{aligned} A_1&=a_0s(1+s)+a_1(1+s^3)\\ A_2&=-a_0s(1-s)+a_1(1-s^3)\\ B_1&=b_0s(1-s)+b_1(1-s^3)\\ B_2&=-b_0s(1+s)+b_1(1+s^3)\\ A&=-\frac{2s\Gamma(1-s^4)\sqrt{1-2s^2\cos 2\theta_1+s^4}}{\pi}\end{aligned}\right\} \tag{85b}$$

The four simultaneous equations (84) can now be written, after rationalizing the denominator,

$$\left.\begin{aligned} A&=\text{R.P.}(1-i)(C+iD)(A_1+iB_1)\\ 0&=\text{I.P.}(1-i)(C+iD)(A_1+iB_1)\\ A&=\text{R.P.}(1-i)(C-iD)(A_2+iB_2)\\ 0&=\text{I.P.}(1-i)(C-iD)(A_2+iB_2)\end{aligned}\right\} \tag{86}$$

which may be restated as

$$\left.\begin{aligned} A&=A_1(C+D)+B_1(C-D)\\ 0&=-A_1(C-D)+B_1(C+D)\\ A&=A_2(C-D)+B_2(C+D)\\ 0&=-A_2(C+D)+B_2(C-D)\end{aligned}\right\} \tag{87}$$

If A_1 and B_1 are determined from the first two and A_2 and B_2 from the last two of equations (87), it may be seen that

$$\left.\begin{aligned} \frac{A(C+D)}{2(C^2+D^2)}&=A_1=a_0s(1+s)+a_1(1+s^3)\\ \frac{A(C-D)}{2(C^2+D^2)}&=A_2=-a_0s(1-s)+a_1(1-s^3)\end{aligned}\right\} \tag{88a}$$

$$\left.\begin{aligned} \frac{A(C-D)}{2(C^2+D^2)}&=B_1=b_0s(1-s)+b_1(1-s^3)\\ \frac{A(C+D)}{2(C^2+D^2)}&=B_2=-b_0s(1+s)+b_1(1+s^3)\end{aligned}\right\} \tag{88b}$$

Equations (88a) when solved for a_0 and a_1 and equations (88b) when solved for b_0 and b_1 give

$$a_0=\frac{A}{C^2+D^2}\,\frac{(C+D)(1-s^3)-(C-D)(1+s^3)}{4s(1-s^4)} \tag{89a}$$

$$a_1=\frac{A}{C^2+D^2}\,\frac{(C+D)s(1-s)+(C-D)s(1+s)}{4s(1-s^4)} \tag{89b}$$

$$b_0=-\frac{A}{C^2+D^2}\,\frac{(C+D)(1-s^3)-(C-D)(1+s^3)}{4s(1-s^4)}=-a_0 \tag{89c}$$

$$b_1=\frac{A}{C^2+D^2}\,\frac{(C+D)s(1-s)+(C-D)s(1+s)}{4s(1-s^4)}=a_1 \tag{89d}$$

Equations (89) may be simplified to

$$a_0=-b_0=\frac{2A(D-Cs^3)}{4(C^2+D^2)s(1-s^4)} \tag{90a}$$

$$a_1=b_1=\frac{2As(C-Ds)}{4(C^2+D^2)s(1-s^4)} \tag{90b}$$

Letting $a_0=-b_0$ and $a_1=b_1$, the complex velocity equation (83) may be rewritten

$$\frac{dw}{dz}=\frac{2[z(a_0+a_1z^2)+i(a_0z^2+a_1)]}{2(z^2-s^2)(1-z^2s^2)\sqrt{1-2iz\sin\theta_1-z^2}} \tag{91}$$

Substituting for a_0 and a_1 from equations (90) gives

$$\frac{dw}{dz}=\frac{2A\{z[D-Cs^3+s(C-Ds)z^2]+i[s(C-Ds)+(D-Cs^3)z^2]\}}{4(C^2+D^2)s(1-s^4)(z^2-s^2)(1-z^2s^2)\sqrt{1-2iz\sin\theta_1-z^2}} \tag{92}$$

Now it may be shown that

$$A=-\frac{2s\Gamma}{\pi}(1-s^4)(C^2+D^2) \tag{93}$$

so that

$$\frac{dw}{dz}=-\frac{\Gamma}{\pi}\,\frac{z[(D-Cs^3)+s(C-Ds)z^2]+i[s(C-Ds)+(D-Cs^3)z^2]}{(z^2-b^2)(1-z^2b^2)\sqrt{1-2iz\sin\theta_1-z^2}} \tag{94}$$

where

$$C+iD=\sqrt{1-s^2+2is\sin\theta_1}$$

The interference velocity is obtained by subtracting $-is\Gamma/\pi(z^2-s^2)$, so that

$$\frac{dw_I}{dz}=-\frac{is\Gamma}{\pi(z^2-s^2)}\left\{\frac{s(C-Ds)+(D-Cs^3)z^2-iz[D-Cs^3+s(C-Ds)z^2]}{s(1-z^2s^2)\sqrt{1-2iz\sin\theta_1-z^2}}-1\right\} \tag{95}$$

Now divide by the closed-tunnel interference to obtain the quality factor, so that

$$k=\frac{\dfrac{-is\Gamma}{\pi(z^2-s^2)}\;\dfrac{s(C-Ds)+(D-Cs^3)z^2-iz\,[D-Cs^3+s(C-Ds)z^2]-s(1-z^2s^2)\sqrt{1-2iz\sin\theta_1-z^2}}{s(1-z^2s^2)\sqrt{1-2iz\sin\theta_1-z^2}}}{\dfrac{-is\Gamma}{\pi(z^2-s^2)}\left[\dfrac{(1-s^2)(1+z^2)}{1-z^2s^2}-1\right]} \tag{96}$$

or

$$k=\frac{s(C-Ds)+(D-Cs^3)z^2-iz\,[D-Cs^3+s(C-Ds)z^2]-s(1-z^2s^2)\sqrt{1-2iz\sin\theta_1-z^2}}{s(z^2-s^2)\sqrt{1-2iz\sin\theta_1-z^2}}. \tag{97}$$

The interference quality factor at the center of the tunnel may be examined by letting $z=0$; then

$$k=\frac{C-Ds-1}{-s^2} \tag{98}$$

From the evaluation of the constants, equation (94),

$$C=\sqrt[4]{1-2s^2\cos 2\theta_1+s^4}\cos\psi \tag{99}$$

$$D=\sqrt[4]{1-2s^2\cos 2\theta_1+s^4}\sin\psi \tag{100}$$

where

$$\psi=\frac{1}{2}\tan^{-1}\frac{2s\sin\theta_1}{1-s^2} \tag{101}$$

When s is small, equation (98) may be simplified by first approximating C and D. These approximations are, for small values of s,

$$C=1-\frac{s^2}{2}(\cos 2\theta_1+\sin^2\theta_1) \tag{102}$$

$$D=s\sin\theta_1 \tag{103}$$

When the values for C and D given in equations (102) and (103) are substituted into equation (98), it becomes

$$k=\sin\theta_1+\frac{\cos^2\theta_1}{2} \tag{104}$$

This equation also checks with the results given in reference 5, with the usual change in sign to conform with the notation of this report.

Lift interference of rectangular tunnels.—The function which transforms a rectangular tunnel into a circular tunnel is given in paragraph 14.8, reference 8, as

$$\zeta=\frac{\operatorname{sn}\dfrac{\lambda z}{2}\operatorname{dn}\dfrac{\lambda z}{2}}{\operatorname{cn}\dfrac{\lambda z}{2}} \tag{105}$$

where $\operatorname{sn}\frac{\lambda z}{2}$, $\operatorname{dn}\frac{\lambda z}{2}$, and $\operatorname{cn}\frac{\lambda z}{2}$ are Jacobian elliptic functions of z and $\lambda/2$ is defined by

$$\frac{\lambda}{2}=\frac{K}{a}=\frac{K'}{h} \tag{106}$$

where K and iK' are the quarter periods and a and h are the breadth and height of the tunnel. (See paragraphs 14.7 and 14.8 of ref. 8 for further information concerning these functions.)

If a and h are given, then K, K', and m, the squared modulus (see ref. 8, paragraph 14.8), are uniquely determined. Once the constants, K, K', and m are determined, the slot location and the half-span length l may be computed. First, consider slots which are located on the top and bottom of the tunnel (see fig. 1(b)). In reference 8, paragraph 14.8, it is shown that the top of the tunnel may be expressed by $z=x+\frac{ih}{2}$ or $\lambda z=\lambda x+iK'$. It is also shown that the transformation (105) may also be expressed

$$\zeta^2=\frac{1-\operatorname{cn}\lambda z}{1+\operatorname{cn}\lambda z} \tag{107}$$

so that the equation for the top of the tunnel becomes, in the ζ-plane,

$$\zeta^2=\frac{1-\operatorname{cn}(\lambda x+iK')}{1+\operatorname{cn}(\lambda x+iK')} \tag{108}$$

From reference 8, paragraph 14.8, $\operatorname{cn}(\lambda x+iK')$ is equal to $-m^{1/2}\operatorname{ds} i\lambda x$, which will, for convenience, be called $i\mu$. Now, on the circle,

$$\zeta^2=e^{2i\theta}=\frac{1-i\mu}{1+i\mu} \tag{109}$$

and if the real and imaginary portions are separated,

$$\cos 2\theta=\frac{1-\mu^2}{1+\mu^2}=\frac{m-(\operatorname{ds}\lambda x)^2}{m+(\operatorname{ds}\lambda x)^2} \tag{110}$$

or

$$\sin 2\theta=-\frac{2\mu}{1+\mu^2}=\frac{2\operatorname{ds}\lambda x}{\sqrt{m}}\,\frac{1}{1+\dfrac{(\operatorname{ds}\lambda x)^2}{m}} \tag{111}$$

The θ_g's of the circular tunnel in the ζ-plane are determined from the above equations by the locations of the slot edges x_g in the z-plane (see fig. 1(b)).

If the slots are on the side of the tunnel, a similar analysis starting with $z=\frac{a}{2}+iy$ or $\lambda z=K+i\lambda y$ will show that

$$\sin 2\theta_g=\frac{2i\sqrt{1-m}\operatorname{sd}(i\lambda y,m)}{1+(1-m)[\operatorname{sd}(i\lambda y,m)]^2}=\frac{2\sqrt{1-m}\operatorname{sd}(\lambda y,1-m)}{1+(1-m)[\operatorname{sd}(\lambda y,1-m)]^2} \tag{112}$$

As before, equation (112) may be used to determine the θ_g's when the slot edges are functions of y.

The value of l is given in reference 8 as

$$l^2=\frac{1-\operatorname{cn}\lambda b}{1+\operatorname{cn}\lambda b} \tag{113}$$

With l and the θ_g's known, the complex velocity of the tunnel in the ζ-plane may now be computed, and the interference may be determined from equation (46).

The calculation of the interference for rectangular tunnels may be simplified by applying the conclusion following equation (48), which states that the quality factor of the transformed tunnel is approximately equal to the quality factor of the original tunnel, provided the transformation function can be approximated with $z=c\zeta$. Equation (105) is shown in reference 8, paragraph 14.8, to be approximately equal to $\zeta=\lambda z/2$; hence the conclusion following equation (48) is valid for rectangular tunnels. Thus, it is necessary only to determine the quality factor for the transformed tunnel and to apply it to the correction for the fully closed rectangular tunnel (see ref. 8, paragraph 14.8, for this correction) to obtain the correction for the corresponding slotted rectangular tunnel.

Circular tunnels having general slot configurations.—Equation (16) is used to obtain the complex velocity for a configuration which contains a general slot distribution. Equation (16) may be written

$$\frac{dw}{dz}=\frac{pz(a_1\cos\vartheta+b_1\sin\vartheta)\sum_{n=0}^{m}(\alpha_n+i\beta_n)\cot^n\frac{\vartheta}{2}}{(z^2-s^2)(1-z^2s^2)\prod_{g=1}^{2m}\sqrt{\cot\frac{\vartheta}{2}-\cot\frac{\theta_g}{2}}} \tag{114}$$

where p has the same definition as given for equation (25). If z is substituted for ϑ by using the relation $z=e^{i\vartheta}$, equation (114) becomes

$$\frac{dw}{dz}=\frac{pz\left(a_1\frac{1+z^2}{2z}+ib_1\frac{1-z^2}{2z}\right)\sum_{n=0}^{m}(\alpha_n+i\beta_n)\left(i\frac{z+1}{z-1}\right)^n}{(z^2-s^2)(1-z^2s^2)\prod_{g=1}^{2m}\sqrt{i\frac{z+1}{z-1}-\cot\frac{\theta_g}{2}}} \tag{115}$$

Equation (115) may be reduced to

$$\frac{dw}{dz}=\frac{p[a_1(1+z^2)+ib_1(1-z^2)]\sum_{n=0}^{m}(\alpha_n+i\beta_n)(z-1)^{m-n}(z+1)^n i^n}{2(z^2-s^2)(1-z^2s^2)\prod_{g=1}^{2m}\sqrt{i(z+1)-(z-1)\cot\frac{\theta_g}{2}}} \tag{116}$$

The constants a_1, b_1, α_0, α_1, . . . α_n, and β_0, β_1, . . . β_n are determined in the same manner as was used for the symmetrical slot configurations; that is, the circulation about both poles is equal to Γ, the source strength σ is zero, and the potential in each slot is equal to zero. The conditions on the circulation and source strength may be determined from the line integral about the poles s and $-s$. For the pole at s,

$$\Gamma+i\sigma=\frac{2\pi ip[a_1(1+s^2)+ib_1(1-s^2)]\sum_{n=0}^{m}(\alpha_n+i\beta_n)(1-s)^{m-n}(1+s)^n i^n(-1)^{m-n}}{4s(1-s^4)\prod_{g=1}^{2m}\sqrt{i(s+1)-(s-1)\cot\frac{\theta_g}{2}}} \tag{117a}$$

and for the pole at $-s$,

$$\Gamma+i\sigma=\frac{2\pi ip[a_1(1+s^2)+ib_1(1-s^2)]\sum_{n=0}^{m}(\alpha_n+i\beta_n)(1+s)^{m-n}(1-s)^n i^n(-1)^{m-n}}{4s(1-s^4)\prod_{g=1}^{2m}\sqrt{i(1-s)+(1+s)\cot\frac{\theta_g}{2}}} \tag{117b}$$

The condition on the potential in each slot may be determined from integrating the velocity over each panel, or

$$0=\int_{panel}\frac{\left[(a_1\cos\theta+b_1\sin\theta)\sum_{n=0}^{m}(\alpha_1+i\beta_1)\cot^n\frac{\theta}{2}\right]d\theta}{(1-2s^2\cos 2\theta+s^4)\prod_{g=1}^{2m}\sqrt{\cot\frac{\theta}{2}-\cot\frac{\theta_g}{2}}} \tag{117c}$$

The constants a_1, b_1, α_0, α_1, . . . α_n, and β_0, β_1, . . . β_n are determined from the solution of the set of simultaneous equations (117). Once the constants are determined, the complex velocity may be determined, and the interference may then be computed in the same manner as was used for the various symmetrical cases.

RESULTS AND DISCUSSION

INTERFERENCE QUALITY FACTORS FOR SEVERAL CIRCULAR TUNNELS WITH SYMMETRICALLY LOCATED, EVENLY SPACED SLOTS

The quality factors for circular tunnels containing various symmetrically located, evenly spaced slots of equal length and wings of very small span ($s\rightarrow 0$) are given in figure 3. The curves for tunnels that have panels across the x-axis and contain 4, 8, or 12 slots are calculated from the formula

$$k=-\frac{\int_0^{\theta_1}\frac{\cos\left(\frac{m}{2}+1\right)\theta\,d\theta}{\sqrt{\cos^2\frac{m}{2}\theta-\cos^2\frac{m\theta_1}{2}}}}{\int_0^{\theta_1}\frac{\cos\left(\frac{m}{2}-1\right)\theta\,d\theta}{\sqrt{\cos^2\frac{m}{2}\theta-\cos^2\frac{m\theta_1}{2}}}} \tag{118}$$

where θ is defined in figure 1 and m is the number of slots. Equation (118) may be derived by considering the value of equation (34), expressed for symmetrically located, evenly spaced slots of equal width, when s and z are equal to zero. It is also the negative of the relation given in reference 5 for the same tunnel configurations, the minus sign being used to conform with the notation of this report.

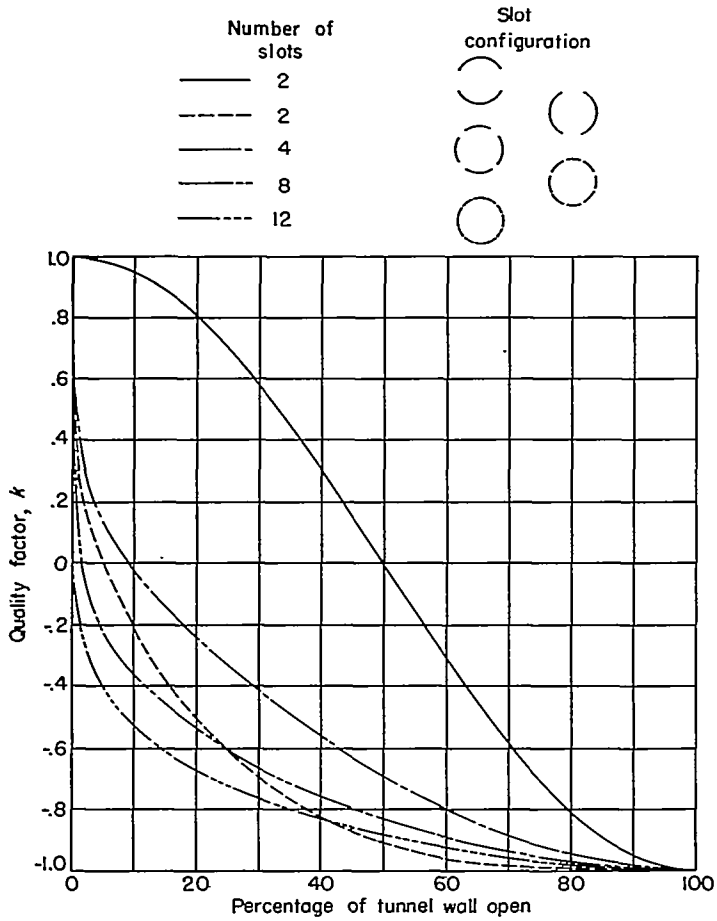

FIGURE 3.—Quality factors for small-span wings ($s \rightarrow 0$) in circular tunnels containing various numbers of evenly spaced slots of equal length.

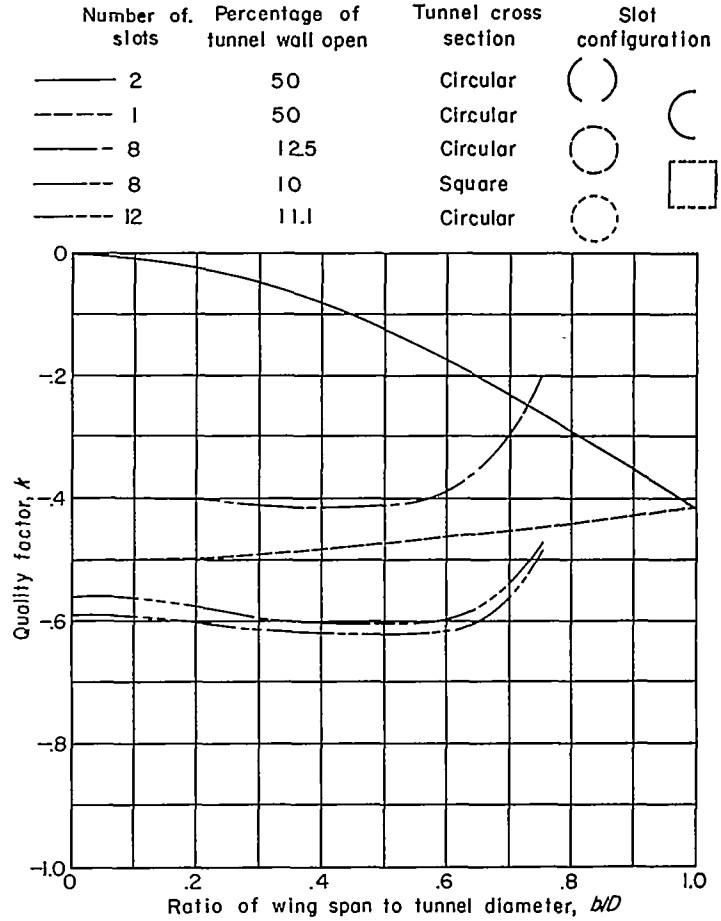

FIGURE 4.—Variation of the quality factor at the center of the model with the span of the model.

An analysis of figure 3 shows that, for all configurations except the one with two slots across the x-axis, only a small percentage of the tunnel wall must be opened in order to obtain no interference at the center of a small model and that the amount of opening required rapidly becomes smaller when the number of slots is increased. It is also noted that the change in quality factor is very rapid at the null-interference condition, so that an accurate estimate of the interference is difficult.

The importance of slot location in determining the quality factor is indicated by the large divergence of the two curves for tunnels containing two slots. It can be shown, however, by comparing the quality-factor functions for the conditions of slots across the x- and y-axes and panels across the x- and y-axes, that as the number of slots increases, the quality factors will approach each other. Since the quality factors approach each other, it may be expected that the quality-factor curves for tunnels containing 8 or 12 evenly spaced slots of equal length will be approximately correct for any slot location. Thus, the quality factor should be approximately correct, even though the model is rolled in the tunnel.

VARIATION OF QUALITY FACTOR WITH SPAN OF MODEL

The effect of model span on the quality factor k at the center of several slotted tunnels is shown in figure 4. Examination of the curves shows that the quality factor is fairly constant over an appreciable range of spans, in that it does not vary more than 10 percent for spans of 0.5 to 0.6 of the tunnel diameter or width. The quality factor for the tunnel containing two slots is seen to vary more, in that the quality factor changes 0.10 for a change in the span from zero to 0.46 of the tunnel diameter. The quality factor of the single slot, however, is seen to remain fairly constant regardless of span.

The spanwise variations of the quality factor for a model with a span of 0.75 of the tunnel diameter is shown in figure 5. This figure shows that the quality factor for the tunnels containing 8 or 12 slots is about 0.3 larger at the wing tips than it is at the center, whereas for the tunnel containing two slots it decreases about 0.6. These changes indicate that the spanwise change in k can depend upon the boundary condition at the intersection of the wall and x-axis; that is, if a panel intersects the x-axis, k will become larger, and if a slot intersects the x-axis, k will become smaller. Such a tendency would be difficult to prove, however, so that an analysis of the variation in k for any particular tunnel would require a computation of k along the span for that model. These variations in k also indicate that the lift corrections for a model with a span as great as 0.75 of the tunnel diameter can be roughly approximated by using the value of k at the center of the tunnel; however, a more accurate correction would involve the use of an average value for k as well as an average of the load over the span.

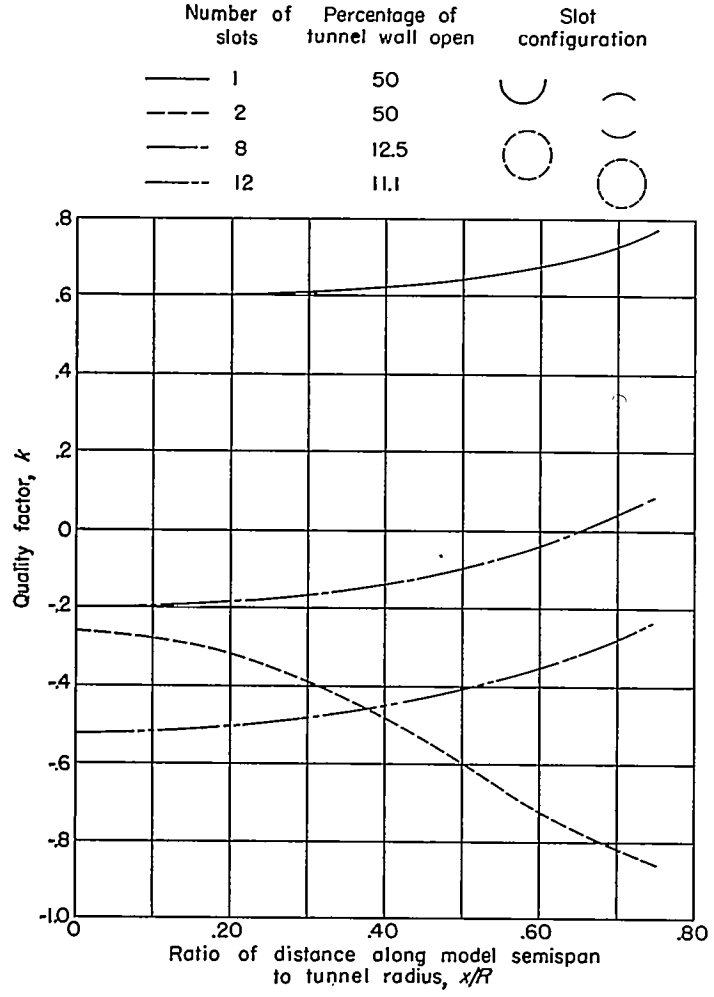

FIGURE 5.—Variation of the quality factor along the span in several tunnels containing equally spaced, symmetrically located slots of equal length. $b=0.75D$.

A résumé of the observations made from figures 4 and 5 indicates that, for these specific slot configurations at least, the quality factors for tunnels containing 8 or 12 slots, provided they are symmetrically located, equally spaced, and of equal length, are more nearly constant throughout a greater portion of the central region of the tunnel than are the quality factors in tunnels containing two slots. The fact that the quality factor is moderately constant even at spans of 0.75 permits the correction for lift interference to be made by computing the interference of the closed tunnel having the same cross section and then multiplying that interference by the quality factor for the center of the slotted tunnel.

QUALITY FACTORS IN TUNNELS CONTAINING A SINGLE SLOT

The variation of the quality factor with percentage of wall open in a tunnel containing a single slot symmetrically located with respect to the x-axis is shown in equation (80) and in figure 6 to be somewhat different from those previously studied in that k is greater on the half-span of the wing which points toward the panel and is smaller on the side which points toward the slot. This variation of k means that a spanwise variation in angle of attack exists which would cause the model to roll. Thus, a tunnel of this type, that is, a single slot symmetrically located with respect to

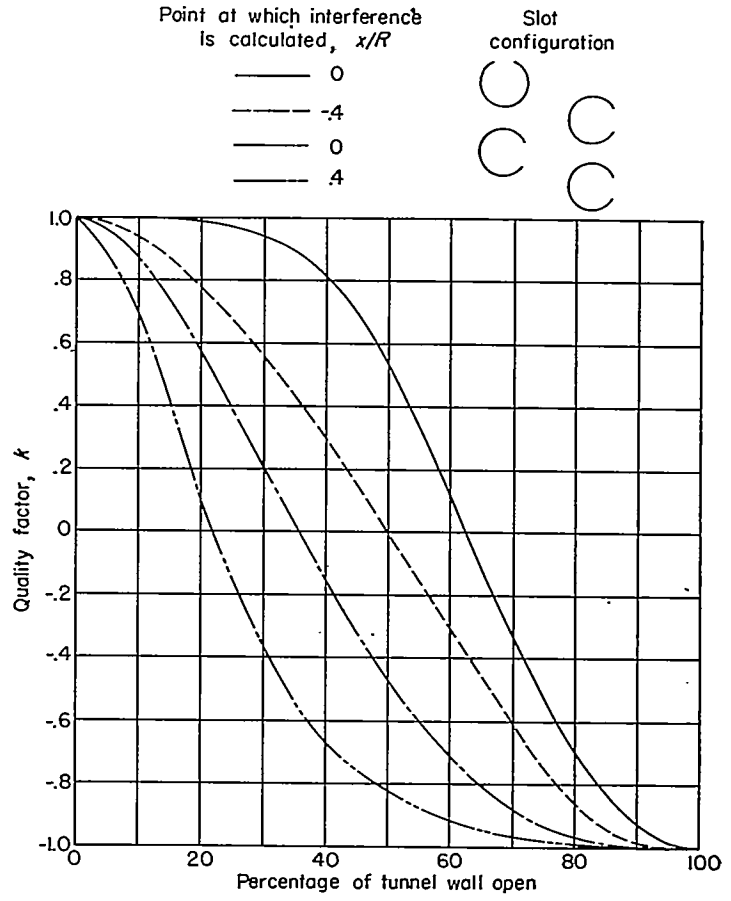

FIGURE 6.—Quality factors for a tunnel containing a single slot with a model of span equal to one-half the tunnel diameter.

the x-axis, has interferences which are more difficult to correct for because of the introduction of an unnecessary rolling moment into the measured data.

This rolling moment does not exist, however, if the slot is symmetrically located with respect to the y-axis. It is shown in equation (97), however, that the induced velocities will not be normal to the span but will have a small component along the span. Such a component should not affect the total forces seriously, since it would not affect the total induced velocity. However, the effects of this component should perhaps be considered in the treatment of load distributions along the span. Thus, the pecularities of the interference effects of tunnels containing a single slot symmetrically located with respect to either axis indicate that its effects will be more difficult to correct.

If the equations for the single-slot case are extended to a larger odd number of evenly spaced, equal-width slots, it can be expected that both the rolling moment and the cross flows will become smaller because the walls create a more uniform interference field at the model.

EFFECTS OF COMPRESSIBILITY ON THE CORRECTIONS

It is shown in reference 9 that the lift due to compressible flow can be corrected in exactly the same manner as though the flow were incompressible. Thus, neither the k nor the δ of equations (43) and (44) is a function of compressibility. Since the arguments used in reference 9 are based on subsonic linearized compressible flow, it may be expected that

corrections can be made for the critical or slightly higher Mach numbers.

APPLICABILITY OF THE THEORY

Several of the differences between the idealized and the actual problem are those due to viscosity, which causes a mixing region in the neighborhood of the slot rather than the assumed constant pressure surface which divides the high-velocity tunnel air and the stagnant tank air. Since the mixing region involves various complicated phenomena such as turbulence, velocity gradients, separation at the outer slot edges, and differences in boundary conditions in different slots depending upon the direction of flow through the slots, it is very likely that its effects on the lift interference will have to be determined from analysis of experimental data (for example, ref. 10).

Another effect of viscosity which becomes important if the slots are narrow and deep is the friction on the air as it flows through the slots. Since the friction reduces the amount of flow through the slots, they will effectively become narrower, so that the quality factor may be expected to become larger.

The possibility also exists that, in an actual tunnel, the pressures may not be equal in all the slots and the slot pressures may not be equal to the pressure in the tank. It would be expected that if the difference between the pressure in the slot and that in the tank causes more flow through the slot than occurs in the ideal tunnel, the slot will effectively be wider and if the difference decreases the flow, the slot will effectively be narrower. Thus, the actual quality factor will depend upon the effective slot widths as determined by the pressure increments.

Other differences occur because a practical tunnel cannot be constructed like the ideal tunnel. These differences involve finite slot lengths, variable-width slots, and lips on the slot edges. In considering the effects of finite slot lengths, it seems reasonable to assume that those effects should be no more serious than the effects of a finite-length open tunnel. In reference 11, it is shown that the theoretical lift corrections for an infinitely long open tunnel are adequate, provided the model is located a distance of at least one-half the tunnel height from the entrance and exit regions. Therefore, if the slot configuration is such that the width is constant over a section whose length is at least equal to tunnel height, the theoretical corrections should be adequate even though the slot width may vary considerably outside that region. The effect of lips on the slots may be shown qualitatively by comparing the pressure gradients of the two types of slot configurations, that is, with and without lips. Since the lips confine the flow, the pressure gradient in that configuration is less steep through the slot than if there were no lips. Therefore, the velocity may be expected to be lower, so that the effective width of the slots will be reduced and the quality factor thereby increased.

CONCLUSIONS

An analysis of the equations which represent the interference on the trailing-vortex system of a uniformly loaded wing, due to wind-tunnel walls with mixed open and closed boundaries, has shown that:

1. Slot openings of the order of 7 percent of the tunnel periphery for four evenly spaced slots of equal length, and less for larger numbers of slots, are required to reduce the interference on a lifting model to zero. The zero-interference quality factor, which is defined as the ratio of the interference of a slotted tunnel to the interference of a closed tunnel, is critical with respect to the percentage of wall opening, inasmuch as a small change in wall opening will cause an appreciable change in the quality factor when its value is near zero.
2. The tunnels which contain two symmetrically located slots showed quite different values of the interference for different slot locations. The differences in interference became smaller as the number of slots increased.
3. In the tunnels examined, a region is noted to exist about the center of the tunnel in which the ratio of the slotted-tunnel interference to the closed-tunnel interference was fairly constant, so that in order to obtain the corrections for the effects of a slotted tunnel it is necessary only to multiply the closed-tunnel interference by a constant.
4. The region in which the ratio of the slotted-tunnel interference to the closed-tunnel interference is reasonably uniform was found to be larger for the tunnels containing 8 or 12 slots than for those containing 2 slots.
5. An examination of tunnels containing a single slot showed that this slot produced a rolling moment or a cross flow on the model. Either or both of these phenomena may be expected for tunnels containing a larger odd number of evenly spaced, equal-width slots. These effects should, however, decrease as the number of slots increases. Similar interference may also be expected for any case in which the slots are asymmetrically arranged with respect to the model axes.
6. An analysis of the effects of compressibility shows that the quality factor is relatively unaffected by compressibility throughout the subsonic region.

Langley Aeronautical Laboratory,
National Advisory Committee for Aeronautics,
Langley Field, Va., *February 3, 1953.*

REFERENCES

1. Wright, Ray H., and Ward, Vernon G.: NACA Transonic Wind-Tunnel Test Sections. NACA Rep. 1231, 1955. (Supersedes NACA RM L8J06.)
2. Toussaint, A.: Experimental Methods—Wind Tunnels. Influence of the Dimensions of the Air Stream. Vol. III of Aerodynamic Theory, div. I, part 1, ch. III, sec. 3, W. F. Durand, ed., Julius Springer (Berlin), 1935, pp. 290–299.
3. Kondo, Kazuo: Boundary Interference of Partially Closed Wind Tunnels. Rep. No. 137 (vol. XI, 5), Aero. Res. Inst., Tokyo Imperial Univ., Mar. 1936, pp. 165–190.
4. Riegels, F.: Correction Factors for Wind Tunnels of Elliptic Section With Partly Open and Partly Closed Test Section. NACA TM 1310, 1951.
5. Pistolesi, E.: On the Interference of a Wind Tunnel With a Mixed Boundary. Cornell Aero. Lab., Inc., Dec. 1949. (From Commentationes, Pont. Acad. Sci., anno IV, vol. IV., no. 9, 1940.)
6. Davis, Don D., Jr., and Moore, Dewey: Analytical Study of Blockage- and Lift-Interference Corrections for Slotted Tunnels Obtained by the Substitution of an Equivalent Homogeneous Boundary for the Discrete Slots. NACA RM L53E07b, 1953.
7. Glauert, H.: Wind Tunnel Interference on Wings, Bodies and Airscrews. R. & M. No. 1566, British A.R.C., 1933.
8. Milne-Thomson, L. M.: Theoretical Aerodynamics. D. Van Nostrand Co., Inc., or Macmillan and Co., Ltd., 1948.
9. Göthert, B.: Wind-Tunnel Corrections at High Subsonic Speeds Particularly for an Enclosed Circular Tunnel. NACA TM 1300, 1952.
10. Sleeman, William C., Jr., Klevatt, Paul L., and Linsley, Edward L.: Comparison of Transonic Characteristics of Lifting Wings From Experiments in a Small Slotted Tunnel and the Langley High-Speed 7- by 10-Foot Tunnel. NACA RM L51F14, 1951.
11. Katzoff, S., Gardner, Clifford S., Diesendruck, Leo, and Eisenstadt, Bertram J.: Linear Theory of Boundary Effects in Open Wind Tunnels With Finite Jet Lengths. NACA Rep. 976, 1950. (Supersedes NACA TN 1826.)