57-32-86 [redacted] 16418

Copy 216
RM 54K24

RM 54K24

TECH LIBRARY KAFB, NM
0143538

7590

NACA

RESEARCH MEMORANDUM

DESCRIPTION AND BIBLIOGRAPHY OF NACA RESEARCH ON WING CONTROLS

JANUARY 1946 - FEBRUARY 1955

By Jack D. Brewer

NACA Headquarters
Washington, D. C.

TECHNICAL LIBRARY
AFL 2291

Classification cancelled (or changed to Unclassified)
By Authority of NASA-45
(OFFICER AUTHORIZED TO CHANGE)
By
NAME AND
GRADE OF OFFICER MAKING CHANGE)
8 Aug 1961
DATE
CLASSIFIED DOCUMENT
[redacted]
authorized person is prohibited by law.

NATIONAL ADVISORY COMMITTEE FOR AERONAUTICS

WASHINGTON

March 24, 1955

[redacted]

TECH LIBRARY KAFB, NM
0143538

 [redacted]

NATIONAL ADVISORY COMMITTEE FOR AERONAUTICS

RESEARCH MEMORANDUM

DESCRIPTION AND BIBLIOGRAPHY OF NACA RESEARCH ON WING CONTROLS

JANUARY 1946 - FEBRUARY 1955

By Jack D. Brewer

3625

FOREWORD

The accompanying tables and bibliography describe the experimental aerodynamic studies of the NACA in the field of wing controls for the period between January, 1946 and February, 1955. This paper has been prepared to simplify the task of industry and service engineering personnel of locating pertinent data from the large amount of information available.

CD-1

The tables are grouped according to the following major classifications:

- Trailing-edge flap controls (including all-movable wing and tip controls)
- Leading-edge flap controls
- Spoiler controls

Each group is subdivided further in accordance with the index presented herein. The tables themselves present the following information concerning each control study reported:

- Wing planform
- Control arrangement
- Test conditions and facility
- Type of control information obtained
- Reference report

Typical types of controls referred to in the tables are shown in figure 1.

It will be observed that, inasmuch as the tables are divided into four Mach number categories, studies covering a wide speed range are in many cases listed more than once. Tables not complete in this regard are noted as follows:

[redacted]

~~WADC 55-1492K~~

PARD reports usually present results in the high subsonic, transonic, and supersonic speed ranges but are listed here only in the transonic and supersonic categories (M = 0.95 to 1.20, 1.20 to ----).

Some of the reports on results obtained from the wing-flow technique, the Langley 7- by 10-foot high-speed tunnel, the Langley and Ames 16-foot high-speed tunnels, and the Ames 12-foot pressure tunnel present information through the subsonic speed range; such reports are listed here only in the high subsonic speed category (M = 0.50 to 0.95). Reports on 7- by 10-foot tunnel bump results are listed only in the M = 0.95 to 1.20 category.

SYMBOLS

The symbols used in the tables are defined as follows:

A	wing aspect ratio, b^2/S
b	wing span
b_f	flap span
c	wing chord (stream wise)
c_f/c	ratio of flap chord to wing chord[1]
h	spoiler projection
i_w	wing incidence, deg
M	Mach number
R_{max}	maximum Reynolds number based on wing mean aerodynamic chord, in millions
S	wing area
S_f	flap area
t	wing thickness
α	angle of attack, deg
Δ	delta tip control

[1]Listed in tables for constant percent wing chord flaps; for constant chord flaps, the ratio of flap area to wing area S_f/S is given.

$\Delta/2$ half delta tip control

δ angle of flap deflection, deg

Λ wing sweep back (at quarter-chord line unless otherwise noted), deg

λ wing taper ratio, c_t/c_r

Subscripts:

r root

t tip

ABBREVIATIONS

The following abbreviations are used in the tables:

bal. type of control balance

Effn. control effectiveness

F.P. flat plate

HM control hinge moment

L.E. leading edge

loc. for flap-type controls, notation indicates relative spanwise location; for spoiler controls, upper notation indicates chordwise location, lower notation indicates relative spanwise location

P.D. pressure distribution

Rep. NACA Report

RM NACA Research Memorandum

S.S.D. spoiler-slot-deflector

T.E. trailing edge

TN NACA Technical Note

var various locations or types of controls

Facility Designations

L Langley

Stability T.	Stability tunnel
Spin T.	20-ft. free-spinning tunnel
F.F.T.	Free-flight tunnel
L.T.P.T.	Low-turbulence pressure tunnel
4- by 6-ft. T.	4- by 6-ft. vertical tunnel
7- by 10-ft. 300 mph T.	300 mph 7- by 10-ft. tunnel
19-ft. P.T.	19-ft. pressure tunnel
F.S.T.	Full-scale tunnel
8-ft. H.S.T.	8-ft. high-speed tunnel
16-ft. H.S.T.	16-ft. high-speed tunnel
16-ft. T.T.	16-ft. transonic tunnel
7- by 10-ft. H.S.T.	7- by 10-ft. high-speed tunnel
7- by 10-ft. H.S.T.-b	7- by 10-ft. high-speed tunnel-bump
7- by 10-ft. H.S.T.-s.w.	7- by 10-ft. high-speed tunnel-side wall
9- by 12-in. S.B.D.T.	9- by 12-in. supersonic blowdown tunnel
9-in. S.T.	9-in. supersonic tunnel
9-in. M = 4 B.D.T.	9- by 9-in. Mach No. 4 blowdown tunnel
4- by 19-in. T.	4- by 19-in. semi-open tunnel
4-ft. S.P.T.	4- by 4-ft. supersonic pressure tunnel
11-in. H.T.	11-in. hypersonic tunnel
Flight	Flight Research Division
Wing flow	Flight research - wing flow
PARD	Pilotless Aircraft Research Division

A Ames

40- by 80-ft. T.	40- by 80-ft. tunnel
7- by 10-ft. T.	7- by 10-ft. tunnel
12-ft. P.T.	12-ft. pressure tunnel
16-ft. H.S.T.	16-ft. high-speed tunnel
1- by $3\frac{1}{2}$-ft. H.S.T.	1- by $3\frac{1}{2}$-ft. high-speed tunnel
1- by 3-ft. S.T.	1- by 3-ft. supersonic tunnel
6-ft S.T.	6- by 6-ft. supersonic tunnel
Flight	Flight research
Wing flow	Flight research - wing flow

H.S.F.S. High-Speed Flight Station

3625

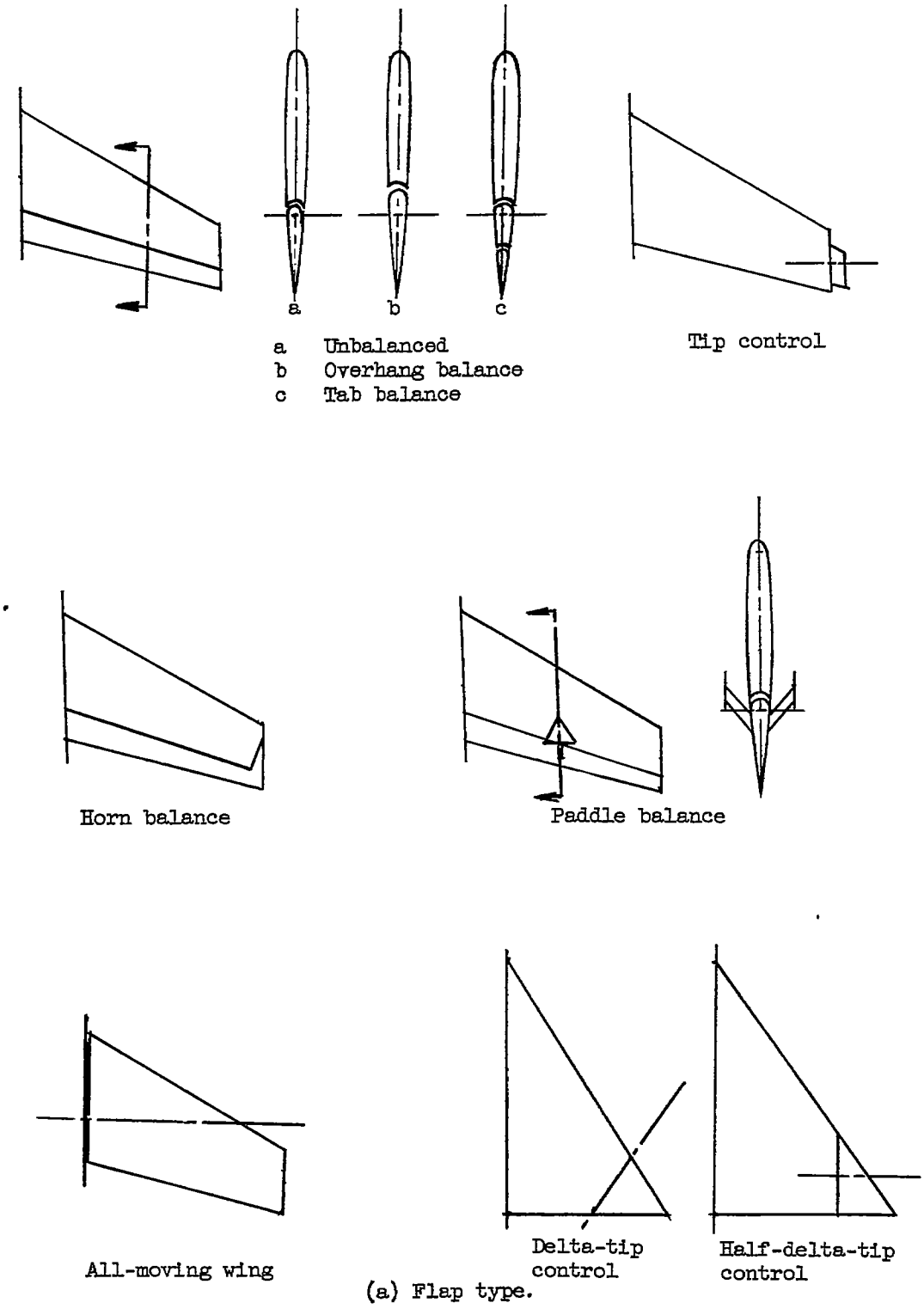

(a) Flap type.

Figure 1. - Typical wing controls referred to in tables.

[redacted]

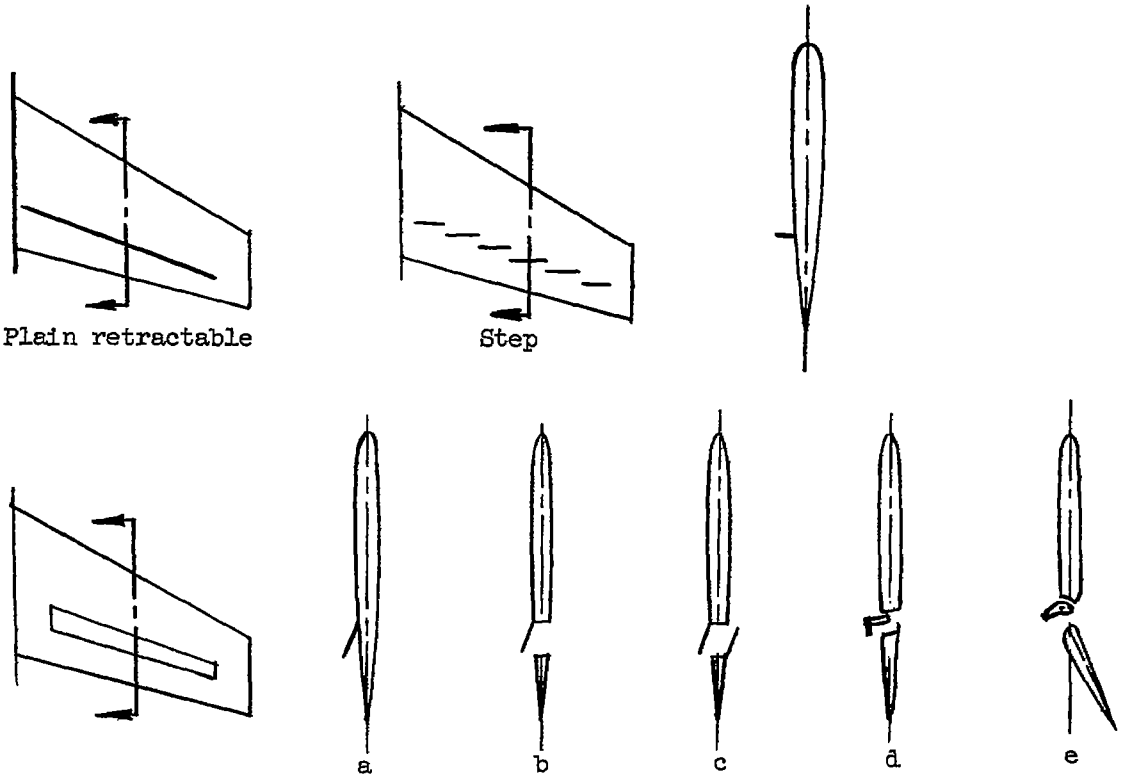

a Flap-type spoiler
b Spoiler-slot
c Spoiler-slot-deflector
d Plug aileron
e Slot-lip aileron

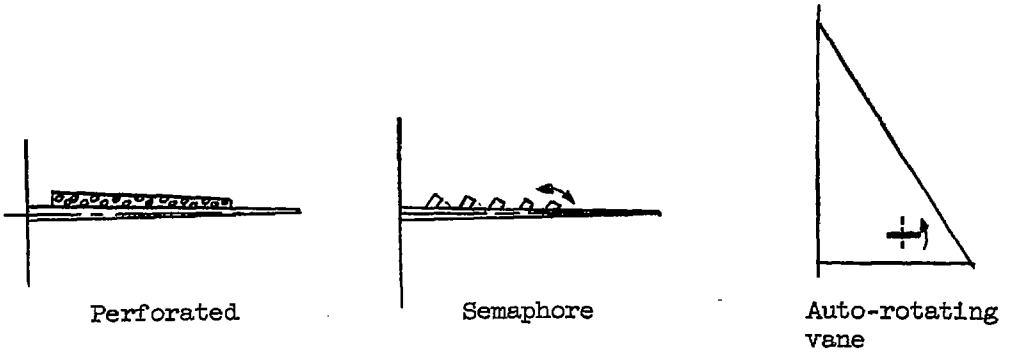

(b) Spoiler type.

Figure 1. - Concluded.

INDEX TO TABLES

Page

TRAILING-EDGE FLAP CONTROLS

Two-dimensional wings
Mach number, ---- to 0.50 9
Mach number, 0.50 to 0.95 10
Mach number, 0.95 to 1.20 11
Mach number, 1.20 to ---- 12

Unswept wings
Mach number, ---- to 0.50 13
Mach number, 0.50 to 0.95 15
Mach number, 0.95 to 1.20 17
Mach number, 1.20 to ---- 19

Swept wings
Sweep: 17° to 38°
Mach number, ---- to 0.50 21
Mach number, 0.50 to 0.95 22
Mach number, 0.95 to 1.20 24
Mach number, 1.20 to ---- 25
Sweep: 39° to 44°; 46° to 48°
Mach number, ---- to 0.50 26
Mach number, 0.50 to 0.95 27
Mach number, 0.95 to 1.20 28
Mach number, 1.20 to ---- 29
Sweep: 45°
Mach number, ---- to 0.50 30
Mach number, 0.50 to 0.95 32
Mach number, 0.95 to 1.20 33
Mach number, 1.20 to ---- 35
Sweep: 49° to --
Mach number, ---- to 0.50 36
Mach number, 0.50 to 0.95 37
Mach number, 0.95 to 1.20 38
Mach number, 1.20 to ---- 39

Triangular wings
Sweep (leading edge): 60°, 63°
Mach number, ---- to 0.50 40
Mach number, 0.50 to 0.95 42
Mach number, 0.95 to 1.20 43
Mach number, 1.20 to ---- 45

Page

Sweep (leading edge): 45°
Mach number, ---- to 0.50 47
Mach number, 0.50 to 0.95 48
Mach number, 0.95 to 1.20 49
Mach number, 1.20 to ---- 50
Other triangular
Mach number, ---- to 0.50 51
Mach number, 0.50 to 0.95 52
Mach number, 0.95 to 1.20 53
Mach number, 1.20 to ---- 54

LEADING-EDGE FLAP CONTROLS

Two-dimensional wings 55

Three-dimensional wings 56

SPOILER CONTROLS

Two-dimensional wings
Mach number, ---- to 0.50 57
Mach number, 0.50 to 0.95 58
Mach number, 0.95 to 1.20 59
Mach number, 1.20 to ---- 60

Unswept wings
Mach number, ---- to 0.50 61
Mach number, 0.50 to 0.95 62
Mach number, 0.95 to 1.20 63
Mach number, 1.20 to ---- 64

Swept wings
Mach number, ---- to 0.50 65
Mach number, 0.50 to 0.95 67
Mach number, 0.95 to 1.20 68
Mach number, 1.20 to ---- 69

Triangular wings
Mach number, ---- to 0.50 70
Mach number, 0.50 to 0.95 71
Mach number, 0.95 to 1.20 72
Mach number, 1.20 to ---- 73

SUMMARY REPORTS 74

BIBLIOGRAPHY 76

3625

TRAILING-EDGE FLAP CONTROLS
TWO-DIMENSIONAL WINGS
M = ---- to 0.50

Airfoil	Control	Test conditions					Data		Reference	
	c_f/c; balance	R_{max}	M	α	δ	Facility	Effn.	HM	Report	Bibl. number
NACA 64-x16,-x13 7-series t/c = 0.17	0.40, 0.35, 0.22	6.0	0.14	-18 to 24	-19 to 19	L-L.T.P.T.	X	X	TN 1048	3
NACA $65_{(112)}$-213	0.22	9.0	----	-10 to 16	-20 to 20	L-L.T.P.T.	X	X	TN 1099	9
Circular arc t/c = 0.10	0.15	---	0.10	-8 to 16	0 to 60	L-L.T.P.T.	X		RM L5K22	13
NACA 0012 (mod.) t/c = 0.11	0.40 tab; overhang	6.0	0.11	0 to stall	0 to 30	L-L.T.P.T.	X	X	TN 1228	20
NACA 65_1-012	0.30	5.4	0.20-.40	-10 to 10	-20 to 20	L-stability T.	X	X	TN 1296	26
NACA 66(215)-216	0.25 overhang	5.0	0.19	-4 to 12	-16 to 20	A-7-by 10-ft T.	X	X	TN 1386	29
NACA 65_1-012	0.25 tab	5.0	0.20-.40	0 to 10	-20 to 20	L-stability T.	X	X	TN 1403	30
Circular arc t/c = 0.06	0.20	2.1	0.15	-6 to 6	0 to 40	L-L.T.P.T.	X	X	RM L7H04	48
NACA 65A006	0.20	18.0	0.10	-12 to 12	0 to 59	L-L.T.P.T.	X		RM L7K06	55
NACA 0009	0.25, 0.50	2.6	0.09	-16 to 14	0 to 30	L-7-by 10-ft 300 mph T.	X	X	TN 1517	64
NACA 0009	0.25, 0.50	1.5	0.10	-10 to 10	0,5,10	L-4-by 6-ft T.	P.D.		TN 1574	65
(Low-drag section) t/c = 0.12	0.24	14.0	0.17	-12 to 12	-20 to 20	L-L.T.P.T.	X	X	TN 1582	66
(Low-drag section) t/c = 0.18	0.20 tab; internal	6.0	0.13	-3 to 10	-18 to 12	L-L.T.P.T.	X	X	TN 1590	67
NACA 64A010	0.30	7.5	----	-8 to 16	-25 to 6	A-7-by 10-ft T.	X	X	RM A8J21	105
7-series t/c = 0.18	0.20 (w. overhang)	6.0	0.13	-22 to 14	-25 to 20	L-L.T.P.T.	X	X	RM L9B23	121

TRAILING-EDGE FLAP CONTROLS
TWO-DIMENSIONAL WINGS
M = 0.50 to 0.95

Airfoil	Control	Test conditions					Data		Reference	
	c_f/c; balance	R_{max}	M	α	δ	Facility	Effn.	HM	Report	Bibl. number
NACA 16-009	0.33; overhang	1.9	0.40-0.85	-2 to 6	-10 to 4	L-24-in H.S.T.	X	X	TN 1406	31
NACA 0009-64	0.33; overhang	1.8	0.40-0.85	-4 to 2	-6 to 10	L-24-in H.S.T.	X	X	TN 1417	33
NACA 0006	0.15, 0.35	2.0	0.30-0.90	-4 to 6	5, 10	A-1-by 3.5-ft H.S.T.	X		RM A7H19	49
NACA 65-210	0.10	1.8	0.30-0.90	-2 to 8	-12 to 11	A-1-by 3.5-ft H.S.T.	X		RM A8A21	79
NACA 65,1-115	0.25	7.5	0.25-0.75	-2 to 12	-12 to 18	L-8-ft H.S.T.	X	X	TN 1596	114
NACA 65-210	0.20	2.0	0.30-0.90	-2 to 8	-6 to 6	A-1-by 3.5-ft H.S.T.	X		TN 3127	347
NACA 0010-0.70	0.25 thick T.E.	2.0	0.30-0.90	-2 to 12	0 to 6	A-1-by 3.5-ft H.S.T.	X		TN 3174	348

TRAILING-EDGE FLAP CONTROLS
TWO-DIMENSIONAL WINGS
M = 0.95 to 1.20

Airfoil	Control	Test conditions					Data		Reference	
	c_f/c; balance	R_{max}	M	α	δ	Facility	Effn.	HM	Report	Bibl. number
No reports available										

TRAILING-EDGE FLAP CONTROLS
TWO-DIMENSIONAL WINGS
M = 1.20 to ----

Airfoil	Control	Test conditions					Data		Reference	
	c_f/c; balance	R_{max}	M	α	δ	Facility	Effn.	HM	Report	Bibl. number
Circular arc t/c = 0.06, 0.09	0.30	8.8	4.00	-2 to 10	-16 to 16	L-9-in M = 4 B.D.T.	X P.D.		RM L51D30	220
Sharp L.E. slab t/c = 0.045, 0.06	0.30 (w. overhang)	0.8	2.40	2, 8	-20 to 20	L-9-in S.T.	X P.D.	X	RM L52F10	268
Sharp L.E. slab t/c = 0.06	0.30 (w. overhang) thick T.E.	0.8	2.40	2, 8	-20 to 20	L-9-in S.T.		X	RM L53I21	328

TRAILING-EDGE FLAP CONTROLS

UNSWEPT WINGS (A = 0 to 16)

M = ---- to 0.50

Wing				Control				Test conditions					Data		Reference	
Λ	A	λ	t/c	$\frac{c_f}{c}$	$\frac{b_f}{b/2}$	Loc.	Bal.	R_{max}	M	α	δ	Facility	Effn.	HM	Report	Bibl. number
0	Var	1.00	0.10	0.25	Var	Var		4.4	0.26	-6 to stall	-20 to 20	L-7-by 10-ft 300 mph T.	X		Rep 1091	250
0	2.0	0.50	----	0.15	0.40	Outb	----	---	----	-----	15	L-F.F.T.	X		TN 1658	70
0	2.5	0.63	0.06	0.25 Thick T.E.	Var	Var		7.6	0.15	-4 to stall	-25 to 20	L-19-ft P.T.	X	X	RM L52B15	257
11	3.0	0.50	0.09	0.30 Var profile	1.00	---	Over-hang	1.4	0.09	-20 to 20	0 to 30	L-4-by 6-ft T.	X	X	TN 1248	21
11	3.0	0.50	0.10	0.30	1.00	---		3.0	----	-28 to 28	-20 to 6	A-7-by 10-ft T.	X	X	RM A7K24	56
16	3.0 X-3 model	0.40	0.045	0.25	0.30	Outb		0.3	----	8	-12 to 12	L-F.F.T.	X		RM L8J04	104
16	3.0 X-3 model	0.40	0.045	0.25	0.30	Outb		1.4	----	0 to 24	-15 to 15	A-7-by 10-ft T.	X		RM A51A16	211
0	3.1	1.00	0.10	0.25	Var	Var		4.5	0.27	0 to 16	0 to 60	L-7-by 10-ft 300 mph T.	X	X	TN 2080	160
0	3.1	1.00	0.10	0.25	Var	Var		4.5	0.27	-4 to 16	-30 to 30	L-7-by 10-ft 300 mph T.	X	X	TN 2199	163
0	3.1	1.00	0.10	0.63 0.16	Var	Tip		9.0	0.40	-6 to stall	0 to 8	L-7-by 10-ft 300 mph T.	X		RM L9H04	139
13	3.4	0.40	0.09 0.15	0.13	1.00	---	Var	4.0	----	0 to stall	-6 to 21	Georg. Tech. 9-ft T.	X	X	TN 2495	209
5	4.0	0.50	0.045	S_f/S: 0.13	0.39	Inb		3.0	0.30	-6 to 20	0 to 35	A-12-ft P.T.	X		RM A8F15	94
4	4.0	0.60	0.08	0.20	0.40	Outb		0.7	0.13	-2 to 28	±4, ±8	L-stability T.	X		RM L9F14	134
3	4.0	0.63	0.06	0.25	0.40 0.80	Var		5.4	0.13	-4 to 25	-25 to 25	L-19-ft P.T.	X	X	RM L53A29	297
3	4.0 X-1 model	0.50	0.04	0.25	0.30	Outb		1.2	0.13	-8 to 24	-12 to 13	L-7-by 10-ft 300 mph T.	X	X	RM L53H27	322
4	4.0	0.40	0.04	0.25	0.30	Outb		1.2	0.13	-6 to 24	0, ±6, ±12	L-7-by 10-ft 300 mph T.	P.D.		RM L53L18	345
10	4.5	0.50	0.10	0.30	1.00	----	Seal	3.0	----	-16 to 18	-25 to 6	A-7-by 10-ft T.	X	X	RM A8B11	83

TRAILING-EDGE FLAP CONTROLS

UNSWEPT WINGS (Λ = 0 to 16)

M = ---- to 0.50 (Concluded)

Wing				Control				Test conditions					Data		Reference	
Λ	A	λ	t/c	$\frac{c_f}{c}$	$\frac{b_f}{b/2}$	Loc.	Bal.	R_{max}	M	α	δ	Facility	Effn.	HM	Report	Bibl. number
0	4.6	0.55	0.09t 0.15r	0.20	0.30	Outb		18.0	----	0 to stall	±15	A-40-by 80-ft T.	X		RM A6K15	12
0	5.0	1.00	0.12	0.26	0.44	Outb		----	----	0 to stall	---	Texas A&M flight	X		TN 2948	296
-3	5.9	0.52	0.12r 0.09t	0.24	0.30	Outb		----	0.30-0.84	-----	---	L-flight	X		RM L52B14	256
2 X-I airplane	6.0	0.50	0.10 0.08	0.15	0.40	Outb		----	0.25-0.48	-----	-12 to 12	H.S.F.S.	X		RM L8A09	78
-2	6.0	0.66	----	0.10	0.54	Outb		----	0.13	-----	0 to 42	L-flight	X		Rep 883	17
-4	6.0	0.43	----	----	0.37	Outb		----	0.40	-----	-24 to 22	L-flight	X	X	TN 1085	7
6	6.0	0.50	0.10	0.28	1.00	----		3.0	----	-16 to 16	-25 to 6	A-7-by 10-ft T.	X	X	RM A8H30	100
0	6.0 6.4	0.33 1.00	0.16 0.12	0.20	0.25	Outb		1.0	0.20	0 to 12	0, ±10 ±20	L-stability T.	X		TN 1317	28
3	6.2	0.50	0.12	0.20 Var profile	Var	Var	Seal	1.5	0.12	-4 to 12	-30 to 30	L-7-by 10-ft 300 mph T.	X	X	TN 1738	74
3	6.2	0.50	0.12	0.20	Var	Outb		---	----			L-7-by 10-ft 300 mph T.		X	TN 1711	73
0	8.0	0.45	0.12	0.30	Var	Var		---	0.33	-----	---------	U. of Wash. 8-by 12-ft T.	X		TN 2563	210
2	10.0	0.50	----	0.30	0.50	Mid		---	----	-8 to 16		L-spin T.	X		TN 1278	22
0	10.6	0.20	0.19	0.15	0.62	Outb		2.0	0.07	2 to 13	-30 to 15	L-F.S.T.	X	X	TN 1649	69
12	11.1	0.25	0.19	0.20	0.13	Outb		9.0	0.18	-4 to stall	-20 to 20	L-19-ft P.T.	X	X	TN 1409	32
12	11.1	0.25	0.19	0.20	0.40	Outb	Tab	9.0	0.18	-4 to stall	-24 to 17	L-19-ft P.T.	X	X	TN 1431	34
12	11.1	0.25	0.19	0.20	0.41	Outb	Tab	9.0	0.18	-4 to 14	-24 to 17	L-19-ft P.T.	X	X	TN 1441	35

TRAILING-EDGE FLAP CONTROLS

UNSWEPT WINGS (Λ = 0 to 16)

M = 0.50 to 0.95

Wing				Control				Test conditions					Data		Reference	
Λ	A	λ	t/c	$\frac{c_f}{c}$	$\frac{b_f}{b/2}$	Loc.	Bal.	R_{max}	M	α	δ	Facility	Effn.	HM	Report	Bibl. number
7	2.7	0.50	0.08	0.25	1.00	----	Seal	1.3	0.50-0.97	-3 to 12	-10 to 60	A-1-by 3.5-ft T.	X	X	RM A50J09b	196
7	2.7	0.50	0.08	0.25	1.00	----	Seal	1.3	0.50-0.97	-3 to 12	-10 to 60	A-1-by 3.5-ft T.	X	X	RM A50K27b	203
16	3.0 X-3 model	0.40	0.045	0.25	0.30	Outb		4.9	0.40-0.90	-2 to 25	-10 to 10	A-16-ft H.S. T.	X		RM A50C30	175
0	3.7	1.00	0.09	0.20	0.81	Outb		2.0	0.50-0.90	0	4	L-7-by 10-ft H.S.T.	X		RM L9H16	142
5	4.0	0.50	0.04	S_f/S: 0.08	0.40	Outb		2.4	0.30-0.90	-15 to 5	0 to 18	A-12-ft P.T.	X		RM A8I17	101
5	4.0	0.50	0.04	S_f/S: 0.25	1.00	----		2.0	0.20-0.90	-15 to 15	0 to 30	A-12-ft P.T.	X		RM A9E05	131
4	4.0	0.60	0.06	0.20	0.40	Outb		3.5	0.40-0.91	0 to 7	-8 to 8	L-7-by 10-ft H.S.T.	X		RM L9E10	132
0	4.0	0.50	0.12	0.20	0.40	Outb		---	0.80-0.85	-4 to 4	0 to 15	A-16-ft H.S. T.	P.D.		RM A50B13	171
7	4.0	0.60	0.06	0.25	1.00	----		2.3	0.30-0.87	0 to 20	Rate of δ	L-7-by 10-ft H.S.T.		X	RM L53E11	311
4 D-558-I airplane	4.2	0.54	0.10	0.15	0.41	Outb		---	0.60-0.90	----	-5 to 11	H.S.F.S.	X		RM L50D20	179
12	4.4	0.52	0.11	S_f/S: 0.25	1.00	----	Overhang	16.0	0.30-0.80	-4 to 6	-8 to 14	A-16-ft H.S. T.	X P.D.	X	RM A7H29	51
8	4.5	0.50	0.10	0.30	1.00	----		3.0	0.30-0.90	-20 to 20	-25 to 6	A-12-ft P.T.	X	X	RM A8B11	83
8	4.5	0.50	0.10	0.30	0.30-0.80	Outb	Tab	2.0	0.20-0.88	-10 to 20	0, 10, 20	A-12-ft P.T.	P.D.	X	RM A9H11a	141
6	4.7	0.56	0.10	0.30	1.00	----	Tab	11.0	0.20-0.80	-3 to 6	-17 to 9	L-16-ft H.S. T.	X	X	RM L7D08a	40
7	4.8	0.50	0.09	0.28	1.00	----	Overhang	14.0	0.20-0.70	-3 to 9	-12 to 14	L-16-ft H.S. T.	X	X	TN 1074	5
0	5.8	0.57	0.10	0.20	0.40	Outb		11.0	0.30-0.71	-4 to 11	-15 to 19	L-7-by 10-ft H.S.T.	X	X	TN 1473	36
-3.5	5.9	0.52	0.12	0.24	0.30	Outb		----	0.30-0.84			L-flight	X		RM L52B14	256

TRAILING-EDGE FLAP CONTROLS

UNSWEPT WINGS (Λ = 0 to 16)

M = 0.50 to 0.95 (Concluded)

Wing				Control				Test conditions					Data		Reference	
Λ	A	λ	t/c	$\frac{c_f}{c}$	$\frac{b_f}{b/2}$	Loc.	Bal.	R_{max}	M	α	δ	Facility	Effn.	HM	Report	Bibl. number
2	6.0	0.50	0.10	0.15	0.40	Outb		---	0.20-0.82			H.S.F.S.	X		RM L9D13	130
X-1 airplane																
4	6.4	0.36	0.13	0.25	0.38	Outb		---	0.70-0.87			A-flight	P.D.		RM A7A15	57
0	7.4	0.50	0.11	0.27	0.44	Outb		7.0	0.40-0.92	-4 to 10	0 to 15	A-16-ft H.S.T.	X	X	RM A9L27	158
0	7.4	0.50	0.11	0.27	0.44	Outb		7.5	0.40-0.92	-4 to 4	0 to 15	A-16-ft H.S.T.	X P.D.		RM A5OH17	193
0	8.0	0.50	0.12	0.15 0.20	0.35 0.43	Outb		6.5	0.45-0.85	0 to 8	0 to 18	A-16-ft H.S.T.	X	X	RM A8H12	98
0	9.0	0.40	0.10	0.20	0.38	Outb		1.4	0.40-0.92	-2 to 10	-10 to 10	L-8-ft H.S.T.	X P.D.		RM L6H28d	10
0	9.0	0.25	0.10	0.20	0.38	Outb		---	0.75-0.93	0	-3, 5	L-8-ft H.S.T.		X	RM L6L10a	14
0	9.0	0.40	0.10	0.20	0.38	Outb		1.4	0.40-0.92	-2 to 7	0, -3, -6	L-8-ft H.S.T.	X P.D.	X	RM L7D21	42
W. spoiler																

TRAILING-EDGE FLAP CONTROLS

UNSWEPT WINGS (Λ = 0 to 16)

M = 0.95 to 1.20

Wing				Control				Test conditions					Data		Reference	
Λ	A	λ	t/c	$\frac{c_f}{c}$	$\frac{b_f}{b/2}$	Loc.	Bal.	R_{max}	M	α	δ	Facility	Effn.	HM	Report	Bibl. number
0	2.0	1.00	0.03	0.25	1.00	----		1.5	0.50-1.10	0	-2 to 8	L-wing flow	X		RM L8A22	80
0	2.3	1.00	0.09	0.20	0.76	Outb	Seal	7.0	0.60-1.40	0	5	L-P.A.R.D.	X		RM L7F30	45
0	2.3	1.00	0.05	0.20	0.89	Outb		12.0	0.70-1.80	0	5	L-P.A.R.D.	X		RM L8E10	90
5	2.5	0.62	0.06	0.35	Var	Var		1.2	0.60-1.18	0	0 to 15	L-7-by 10-ft H.S.T.-b.	X		RM L50G13a	187
5	2.5	0.62	0.06	Var	Var	Var		1.2	0.60-1.18	-4 to 4	0 to 15	L-7-by 10-ft H.S.T.-b.	X		RM L51G03	224
7	2.7	0.50	0.08	0.25	1.00	---	Seal	1.3	1.10-1.30	-3 to 12	-10 to 60	A-1-by 3.5-ft H.S.T.	X	X	RM A50J09b	196
7	2.7	0.50	0.08	0.25	1.00	---		1.3	1.10-1.30	-3 to 12	-10 to 60	A-1-by 3.5-ft H.S.T.	X	X	RM A50K27b	203
15	2.9	0.40	0.045	0.25	0.40	Outb		8.0	0.85-1.90	0	4	L-P.A.R.D.	X		RM L50D17	177
0	3.0	1.00	0.09	0.25	1.00	----		0.9	0.65-1.10	-5 to 30	-12 to 22	L-wing flow	X	X	RM L53D21	308
16	3.0	0.40	0.04	0.25	0.30	Outb		6.0	0.50-1.60	0	5	L-P.A.R.D.	X		RM L54D26a	360
6	3.4	0.45	0.09	0.20	0.81	Outb		8.0	0.80-1.60	0	5	L-P.A.R.D.	X		RM L7L01	58
0	3.7	1.00	0.06 0.09	0.20	0.84	Outb		6.0	0.80-1.40	0	5	L-P.A.R.D.	X		RM L7D02	39
0	3.7	1.00	0.09	0.20	0.81	Outb		8.0	0.80-1.90	0	3 to 6	L-P.A.R.D.	X		RM L9D12	129
0	3.7	1.00	0.09	0.20	Var	Var		7.0	0.60-1.80	0	5	L-P.A.R.D.	X		RM L50A27	168
0	3.7	1.00	0.03 0.09	0.20	0.81	Outb		7.0	0.70-1.70	0	5	L-P.A.R.D.	X		RM L50G14b	188
0	3.7	1.00	0.06	0.20 Thick T.E.	0.81	Outb		7.0	0.60-1.80	0	5	L-P.A.R.D.	X		RM L51G27	226
0	3.7	1.00	0.09	All-moving wing				8.0	0.60-1.80	0	i_w = 0.15 to 0.97	L-P.A.R.D.	X		RM L51H03	228

TRAILING-EDGE FLAP CONTROLS

UNSWEPT WINGS (Λ = 0 to 16)

M = 0.95 to 1.20 (Concluded)

Wing				Control				Test conditions					Data		Reference	
Λ	A	λ	t/c	$\frac{c_f}{c}$	$\frac{b_f}{b/2}$	Loc.	Bal.	R_{max}	M	α	δ	Facility	Effn.	HM	Report	Bibl. number
0	3.7	1.00	0.06	0.20	0.81	Outb		6.0	0.60-1.50	0	5	L-P.A.R.D.	X		RM L53I25	331
0	3.7	1.00	0.03	0.20	0.81	Outb		7.0	1.00-1.80	0	5	L-P.A.R.D.	X		RM L54F23	364
0	4.0	0.60	0.10	0.32	1.00	----		1.0	0.75-1.10	-8 to 8	-8 to 10	L-wing flow	X	X	RM L7C25a	38
5	4.0	0.50	0.046	0.35	0.25	Outb		4.0	0.80-1.80	0	5	L-P.A.R.D.	X		RM L8G20a	96
0	4.0	0.60	0.06	0.30	Var	Var		1.2	0.60-1.10	-6 to 6	0, 5, 10	L-7-by 10-ft H.S.T.-b.	X		RM L50A03	166
0	4.0	0.60	0.04	0.15 $\Delta/2$	0.41	Outb Tip		5.0	0.80-1.40	0	5	L-P.A.R.D.	X		RM L54F29a	365
0	4.9 5.3	0.45 1.00	0.09	----	0.23	Tip		6.0	0.50-1.70	0	5	L-P.A.R.D.	X		RM L5OF21	185
2	6.0 X-1 airplane	0.50	0.10	0.15	0.40	Outb		---	0.80-1.06	-	-12 to 12	H.S.F.S.	X		RM L9G19a	137
2	6.0 X-1 model	0.50	0.10	0.15	0.40	Outb		1.2	0.60-1.10	0 to 10	-12 to 12	L-7-by 10-ft H.S.T.-b.	X		RM L50C22	174
2	6.0 X-1 airplane	0.50	0.10	0.15	0.40	Outb		9.0	0.50-1.10	0 to 10	-9 to 9	H.S.F.S.	P.D.	X	RM L53E04	310

TRAILING-EDGE FLAP CONTROLS

UNSWEPT WINGS (Λ = 0 to 16)

M = 1.20 to ----

Wing				Control				Test conditions					Data		Reference	
Λ	A	λ	t/c	$\frac{c_f}{c}$	$\frac{b_f}{b/2}$	Loc.	Bal.	R_{max}	M	α	δ	Facility	Effn.	HM	Report	Bibl. number
0	1.0	1.00	0.09	0.30	1.00	----		5.0	4.00	-2	-8, -16	L-9-in M = 4 B.D.T.	Lag in force		RM L9L15	155
0	1.3	1.00	0.06	0.30	1.00	----		8.0	4.00	0 to 10	-12 to 12	L-9-in M = 4 B.D.T.	X	X	RM L53D03	304
0	2.3	1.00	0.09	0.20	0.76	Outb	Seal	7.0	0.60-1.40	0	5	L-P.A.R.D.	X		RM L7F30	45
0	2.3	1.00	0.05	0.20	0.89	Outb		12.0	0.70-1.80	0	5	L-P.A.R.D.	X		RM L8E10	90
0	2.3	1.00	0.09	0.30	1.00	----		1.1	1.60	-1 to 4	-16 to 18	L-9-in S.T.	P.D.		RM L9J05	146
0	2.3	1.00	0.06 0.09	0.30	1.00	----		1.1	1.62-2.40	0 to 18	-16 to 18	L-9-in S.T.	P.D.		RM L50J18	197
5	2.5	0.62	0.06	Var	Var	Var		2.3	1.90-2.30	-2 to 4	0 to 15	L-9-by 12-in S.B.D.T.	X		RM L50F08	184
15	2.9	0.40	0.045	0.25	0.40	Outb		8.0	0.85-1.95	0	4	L-P.A.R.D.	X		RM L50D17	177
16	3.0	0.40	0.04	0.25	0.30	Outb		6.0	0.50-1.60	0	5	L-P.A.R.D.	X		RM L54D26a	360
16	3.1	0.40	0.045	0.25	Var	Var		5.6	1.60 2.00	0, 6, 12	-30 to 30	L-4-ft S.P.T.	X	X	RM L54D19	359
5	3.1	0.59		S_f/S: 0.24	1.00	----		1.3	1.90	-3 to 10	-5 to 5	L-9-in S.T.		X	RM L8K12a	108
6	3.4	0.45	0.09	0.20	0.81	Outb		8.0	0.80-1.60	0	5	L-P.A.R.D.	X		RM L7L01	58
0	3.7	1.00	0.06 0.09	0.20	0.84	Outb		6.0	0.80-1.40	0	5	L-P.A.R.D.	X		RM L7D02	39
0	3.7	1.00	0.09	0.20	0.81	Outb		8.0	0.80-1.90	0	3 to 6	L-P.A.R.D.	X		RM L9D12	129
0	3.7	1.00	0.09	0.20	Var	Var		7.0	0.60-1.80	0	5	L-P.A.R.D.	X		RM L50A27	168
0	3.7	1.00	0.03 0.09	0.20	0.81	Outb		7.0	0.70-1.70	0	5	L-P.A.R.D.	X		RM L50G14b	188
0	3.7	1.00	0.06	0.20 Thick T.E.	0.81	Outb		7.0	0.60-1.60	0	5	L-P.A.R.D.	X		RM L51G27	226

TRAILING-EDGE FLAP CONTROLS

UNSWEPT WINGS (Λ = 0 to 16)

M = 1.20 to ---- (Concluded)

Wing				Control				Test conditions					Data		Reference	
Λ	A	λ	t/c	$\frac{c_f}{c}$	$\frac{b_f}{b/2}$	Loc.	Bal.	R_{max}	M	α	δ	Facility	Effn.	RM	Report	Bibl. number
0	3.7	1.00	0.09	All-moving wing				8.0	0.60-1.80	0	i_w = 0.15 to 0.97	L-P.A.R.D.	X		RM L51H03	228
0	3.7	1.00	0.06	0.20	0.81	Outb		6.0	0.60-1.50	0	5	L-P.A.R.D.	X		RM L53I21	331
0	3.7	1.00	0.03	0.20	0.81	Outb		7.0	1.00-1.80	0	5	L-P.A.R.D.	X		RM L54F23	364
5	4.0	0.50	0.046	0.35	0.25	Outb		4.0	0.80-1.80	0	5	L-P.A.R.D.	X		RM L8G20a	96
0	4.0	0.60	0.04	0.15 $\Delta/2$	0.41	Outb Tip		5.0	0.80-1.40	0	5	L-P.A.R.D.	X		RM L54F29a	365
0	4.1	(0)	0.10	All-moving wing				1.4	1.90	-8 to 6	i_w = 0, 4	L-9-by 12-in S.B.D.T.	X		RM L8H04	97
0	4.9 5.3	0.45 1.00	0.09 0.09	$\Delta/2$	0.23	Tip		6.0	0.50-1.70	0	5	L-P.A.R.D.	X		RM L50F21	185

TRAILING-EDGE FLAP CONTROLS

SWEPT WINGS (A = 17 to 38)

M = ---- to 0.50

Wing				Control				Test conditions					Data		Reference	
A	A	λ	t/c	$\frac{c_f}{c}$	$\frac{b_f}{b/2}$	Loc.	Bal.	R_{max}	M	α	δ	Facility	Effn.	HM	Report	Bibl. number
17	2.0	0.50	0.10	0.30	1.00	----		7.5	----	-32 to 32	-25 to 6	A-7-by 10-ft T.	X	X	RM A8J21	105
35	3.0	0.50	0.10	0.26	1.00	----		3.0	----	-28 to 28	-20 to 6	A-7-by 10-ft T.	X	X	RM A7K24	56
38	3.0	0.50	----	0.20	0.50	Outb		---	----	10 to 20	-30 to 30	L-F.F.T.	X		TN 2089	161
38	3.0	0.50	----	0.20	0.50	Outb		---	----	4 to 16	-15 to 15	L-F.F.T.	X		TN 2247	165
33	4.0	0.60	0.06	0.20	0.40	Outb		0.7	0.13	-2 to 28	±4, ±8	L-stability T.	X		RM L9F14	134
35	4.5	0.50	0.07	0.30	1.00	----		3.0	----	-4 to 28	-24 to 6	A-7-by 10-ft T.	X	X	RM A8B11	83
35	4.5	0.54	0.12	0.15	0.50	Outb		---	0.20	-----	-15 to 15	L-flight	X		TN 1511	63
35	4.5	0.54	0.12	0.15	0.50	Outb		4.0	----	-4 to 24	-20 to 20	L-7-by 10-ft 300 mph T.	X		TN 1742	75
35	4.5	0.54	0.12	0.15	0.50	Outb		---	0.20	-----	-15 to 15	L-flight	X		TN 1743	76
±30	4.8	0.44	0.09r 0.15t	0.20	0.35	Outb		18.0	----	0 to stall	-15 to 15	A-40-by 80-ft T.	X		RM A6K15	12
35	4.8 6.0	0.51 0.50	0.10 0.10	0.41 0.20	0.52 0.47	Outb Outb		----	----	-----	----------	L-7-by 10-ft 300 mph T.		X	TN 1711	73
-35	5.8	0.40	0.07	0.20	0.40	Outb		5.3	0.16	0 to stall	-25 to 25	L-19-ft P.T.	X	X	RM L9H18	143
20 X-5 model	5.8	0.44	0.07t 0.09r	0.25	0.32	Outb		2.0	0.15	-4 to 36	-20 to 20	L-7-by 10-ft 300 mph T.	X		RM L50C17a	173
35	6.0	0.50	0.08	0.28	1.00	----		3.0	----	-28 to 28	-25 to 6	A-7-by 10-ft T.	X	X	RM A8H30	100
35	6.0	0.50	0.10	0.20	0.48	Outb		6.8	0.13	0 to 24	-25 to 25	L-19-ft P.T.	X	X	RM L8K12	107

TRAILING-EDGE FLAP CONTROLS

SWEPT WINGS (Λ = 17 to 38)

M = 0.50 to 0.95

Wing				Control				Test conditions					Data		Reference	
Λ	A	λ	t/c	$\frac{c_f}{c}$	$\frac{b_f}{b/2}$	Loc.	Bal.	R_{max}	M	α	δ	Facility	Effn.	HM	Report	Bibl. number
37	2.0	0.33 0.12	0.03	S_f/S: 0.25	1.00	----		1.5	0.50- 1.10	0	-2 to 8	L-wing flow	X		RM L8A22	80
35	3.0	0.60	0.10	S_f/S: 0.10	0.48	Outb		5.0	0.40- 0.90	0 to 9	-9 to 9	L-7-by 10-ft H.S.T.	X		RM L9C23	124
35	3.0	0.60	0.11	S_f/S: 0.09	0.49	Outb		5.0	0.40- 0.91	0 to 11	2 to 19	L-7-by 10-ft H.S.T.	X		RM L9D08	128
35	3.6	0.57	0.09	0.15	0.45	Outb		---	0.40- 0.86	----	-15 to 15	H.S.F.S.	X		RM L50E17	183
D558-II airplane																
38	3.6	0.46	0.08	0.20	0.58	Outb		---	0.48- 0.72	-----	---------	H.S.F.S.	X		RM A51H09	229
X-4 airplane																
38	3.6	0.46	0.08	0.20	0.58	Outb		---	0.40- 0.92	0 to 20	0 to 20	H.S.F.S.	X		RM H54G16	368
X-4 airplane																
38	3.6	0.46	0.08	0.20	0.58	Outb		25.0	0.63- 0.94	1 to 24	2 to 22	H.S.F.S.	X		RM H54K03	380
X-4 airplane				Thick T.E.												
17	4.0	0.20	0.10	0.30	1.00	----	Tab	1.9	0.40- 0.90	-2 to 5	-15 to 5	L-8-ft H.S.T.	X	X	RM L6L10b	15
33	4.0	0.60	0.06	0.20	0.40	Outb		3.5	0.40- 0.91	0 to 12	±10	L-7-by 10-ft H.S.T.	X		RM L51L10	247
35	4.0	0.60	0.06	0.20	0.50	Mid		4.0	0.60- 0.95	0 to 20	-30 to 30	L-7-by 10-ft H.S.T.	P.D.		RM L53C23	303
35	4.0	0.60	0.06	0.20	0.50	Mid	Tab	4.0	0.60- 0.95	0 to 20	-30 to 30	L-7-by 10-ft H.S.T.	X P.D.	X	RM L54A22	349
35	4.5	0.50	0.08	0.30	1.00	---		11.0	0.30- 0.90	-10 to 24	0, -10 -20	A-12-ft P.T.	P.D.	X	RM A9G13	136
35	4.8	0.51	0.09	0.25	0.40	Outb		6.0	0.30- 0.90	-2 to 6	-8 to 8	A-16-ft H.S. T.	X	X	RM A7J02	53
35	4.8	0.51	0.09	0.30	0.50	Outb		6.0	0.30- 0.90	-2 to 4	-10 to 10	A-16-ft H.S. T.	X	X	RM A7K28	57
35	4.8	0.51	0.09	0.30	0.30	Outb		---	0.50 1.02	-----	---------	A-flight	X		RM A54C31	356
Thick T.E.																
35	6.0	0.50	0.08	0.28	1.00	----		3.0	0.30- 0.90	-4 to 28	-20 to 6	A-12-ft P.T.	X	X	RM A8B11	83
20	6.1	0.44	0.09	0.20	0.30	Outb		---	0.50- 0.85	-----	-20 to 20	H.S.F.S.	X		RM L52K18b	287
X-5 airplane																

TRAILING-EDGE FLAP CONTROLS

SWEPT WINGS (Λ = 17 to 38)

M = 0.50 to 0.95 (Concluded)

Wing				Control				Test conditions					Data		Reference	
Λ	A	λ	t/c	$\frac{c_f}{c}$	$\frac{b_f}{b/2}$	Loc.	Bal.	R_{max}	M	α	δ	Facility	Effn.	HM	Report	Bibl. number
30	6.8	0.40	0.09	0.20	0.40	Outb		1.5	0.60-0.92	-2 to 7	-10 to 10	L-8-ft H.S.T.	P.D.		RM L8A30a	82
30	6.8 7.4	0.38	0.09	0.20	0.33	Outb		2.0	0.40-0.85	-2 to 10	-10 to 10	L-8-ft H.S.T.	X	X	RM L7I15	52

TRAILING-EDGE FLAP CONTROLS

SWEPT WINGS (A = 17 to 38)

M = 0.95 to 1.20

Wing				Control				Test conditions					Data		Reference	
A	A	λ	t/c	$\frac{c_f}{c}$	$\frac{b_f}{b/2}$	Loc.	Bal.	R_{max}	M	α	δ	Facility	Effn.	HM	Report	Bibl. number
21	1.9	0.20	0.05	0.20	0.89	Outb		12.0	0.70-1.80	0	5	L-P.A.R.D.	X		RM L8E10	90
30	2.3 3.7	1.00	0.09	0.20	0.76 0.81	Outb		8.0	0.80-1.60	0	5	L-P.A.R.D.	X		RM L7L01	58
35	3.0	1.00	0.07	0.25	1.00	----		1.7	0.60-1.15	-2 to 15	-20 to 20	L-wing flow	X	X	RM L7F13	43
35	3.0	1.00	0.07	0.25	1.00	----	Horn	1.7	0.55-1.35	-6 to 16	5	L-wing flow		X	RM L9B23a	122
35	3.0	1.00	0.07	0.25	1.00	----	Tab	1.7	0.60-1.15	5	-20 to 20	L-wing flow	X	X	RM L9K11	150
35	3.0	1.00	0.07	0.25	0.90	Inb		1.1	0.60-1.15	-20 to 20	-20 to 20	L-7-by 10-ft H.S.T.-b.	X		RM L51J10	241
35	3.0	0.60	0.10	1.00	0.15	Tip		1.9	0.65-1.15	-1 to 8	-17 to 0	L-wing flow	X	X	RM L52B15a	258
38	3.1	1.60	0.07	0.27	0.39	Outb		8.0	0.80-1.80	0 to 1	±5	L-P.A.R.D.	X		RM L50B08	170
35	3.1	1.00	0.07	0.25	1.00	----	Over-hang	1.7	0.60-1.15	0	-20 to 20	L-wing flow	X		RM L50H09	191
35	3.5	0.57	0.09	0.15	0.45	Outb		7.0	0.70-1.70	0	5	L-P.A.R.D.	X		RM L8E28	93
38	3.6	0.46	0.08	0.17 Thick T.E.	0.50	Outb		6.5	0.70-1.60	0	5	L-P.A.R.D.	X		RM L9L19	156
35	4.0	0.60	0.06	0.30	Var	Var		1.1	0.60-1.15	-8 to 8	0 to 10	L-7-by 10-ft H.S.T.-b.	X		RM L9L12a	154
35	4.0	0.60	0.06	0.30	0.86 0.43	Outb		8.0	0.75-1.60	0	2 to 10	L-P.A.R.D.	X		RM L51K16	243
35	4.0	0.60	0.06	0.30	0.43	Outb	Over-hang	1.0	0.60-1.10	-6 to 16	-24 to 24	L-7-by 10-ft H.S.T.-b.	X	X	RM L52G08	273
35	4.8	0.51	0.09	0.30	0.50	Outb		---	0.60-1.05	-----	----------	A-flight	X		RM A50H03	190
20	6.2	0.50	0.10	0.20	0.33	Outb		4.5	0.80-1.50	0	±10	L-P.A.R.D.	X		RM L53I18b	326

TRAILING-EDGE FLAP CONTROLS

SWEPT WINGS (Λ = 17 to 38)

M = 1.20 to ----

Wing				Control				Test conditions					Data		Reference	
Λ	A	λ	t/c	$\frac{c_f}{c}$	$\frac{b_f}{b/2}$	Loc.	Bal.	R_{max}	M	α	δ	Facility	Effn.	HM	Report	Bibl. number
27	1.1	0.30	F.P. 0.03r	S_f/S: 0.16	0.73	Outb		2.0	1.9	-4 to 4	0 to 14	L-9-by 12-in S.B.D.T.	X	X	RM L8K17a	109
21	1.9	0.20	0.05	0.20	0.89	Outb		12.0	0.70-1.80	0	5	L-P.A.R.D.	X		RM L8E10	90
30	2.3 3.7	1.00	0.09	0.20	0.76 0.81	Outb		8.0	0.80-1.60	0	5	L-P.A.R.D.	X		RM L7L01	58
38	3.1	1.60	0.07	0.27	0.39	Outb		8.0	0.80-1.80	0 to 1	±5	L-P.A.R.D.	X		RM L50B08	170
35	3.5	0.57	0.09	0.15	0.45	Outb		7.0	0.70-1.70	0	5	L-P.A.R.D.	X		RM L8E28	93
38	3.6	0.46	0.08	0.17 Thick T.E.	0.50	Outb		6.5	0.70-1.60	0	5	L-P.A.R.D.	X		RM L9L19	156
35	4.0	0.60	0.06	0.30	0.86 0.43	Outb		8.0	0.75-1.60	0	2 to 10	L-P.A.R.D.	X		RM L51K16	243
20	6.2	0.50	0.10	0.20	0.33	Outb		4.5	0.60-1.50	0	±10	L-P.A.R.D.	X		RM L53I18b	328

TRAILING-EDGE FLAP CONTROLS

SWEPT WINGS (Λ = 39 to 44; 46 to 48)

M = ---- to 0.50

Wing				Control				Test conditions					Data		Reference	
Λ	A	λ	t/c	$\frac{c_f}{c}$	$\frac{b_f}{b/2}$	Loc.	Bal.	R_{max}	M	α	δ	Facility	Effn.	HM	Report	Bibl. number
40	2.5	0.42	0.08	0.20	0.50	Outb		2.9	0.16	-6 to 28	-20 to 20	L-7-by 10-ft 300 mph T.		X	TN 2482	208
48	2.9	0.50	0.08	$\Delta/2$	0.20	Tip		2.4	0.19	-15 to 35	-20 to 20	L-7-by 10-ft 300 mph T.	X		RM L51H16a	231
42	3.0	0.50	0.12	0.15	0.81	Outb		4.4	----	0 to 40	-30 to 0	L-F.F.T.	X		RM L52L22	294
40	3.3	0.40	0.09	0.30	1.00	----	Horn tab	4.0	0.14	0 to stall	-6 to 21	Georg. Tech. 9-ft T.	X	X	TN 2495	209
40	3.5	0.58	0.07	S_f/S: 0.08	0.40	Outb		2.0	0.17	0 to 26	-18 to 18	L-7-by 10-ft 300 mph T.	X		RM L53C09	300
47	3.8	0.59	0.06	0.27	0.23	Outb		6.0	0.10	0 to 30	0 to 50	L-19-ft P.T.	X		RM L54C05	352
				Air jet over flap												
47	3.8	0.59	0.06	0.25	0.39 0.16	Outb		6.1	0.10	0 to 31	7, 19	L-F.S.T.	X		RM L52D17a	262
40	3.9	0.63	0.09r 0.05t	0.20	0.50	Outb		6.9	0.16	-4 to 22	-25 to 25	L-19-ft P.T.	X	X	RM L9A07	117
40	4.0	0.50	0.08	0.20	0.50	Outb		2.2	0.16	-6 to 6	0, ±10	L-7-by 10-ft 300 mph T.	X		RM L7G31	47
40	4.0	0.63	0.08	0.20	0.50	Outb		6.8	0.16	-4 to stall	-25 to 25	L-19-ft P.T.	X	X	RM L9E24	133
40	4.0	0.63	0.09	0.20	0.44	Outb		---	----	-----	---------	L-7-by 10-ft 300 mph T.		X	TN 1711	73
47	4.0	0.60	0.06	0.20	0.40	Outb		0.7	0.13	-2 to 28	±4, ±8	L-stability T.	X		RM L9F14	134
42	4.1	0.36	0.09	0.18	0.35	Outb		3.5	0.07	0 to 15	-24 to 24	L-F.S.T.	X		RM L50D14	176
42	5.9	0.50	----	0.30	0.50	Mid		0.3	----	-8 to 32		L-F.F.T.	X		TN 1278	22
42	5.9	0.50	----	0.30	0.50	Mid		0.3	----	0 to 34	±18	L-F.F.T.	X		TN 1287	23

TRAILING-EDGE FLAP CONTROLS

SWEPT WINGS (A = 39 to 44; 46 to 48)

M = 0.50 to 0.95

Wing				Control				Test conditions					Data		Reference	
A	A	λ	t/c	$\frac{c_f}{c}$	$\frac{b_f}{b/2}$	Loc.	Bal.	R_{max}	M	α	δ	Facility	Effn.	HM	Report	Bibl. number
42	2.0	0.65	0.03	S_f/S: 0.25	1.00	----		1.5	0.50-1.10	0	-2 to 8	L-wing flow	X		RM L8A22	80
47	2.0	0.33	0.04 0.07	S_f/S: Var	0.42 0.67	Outb		3.2	0.60-0.90	-3 to 12	-3 to 20	A-6-ft S.T.	X		RM A52J30	284
39	3.1	1.60	0.07	0.25	0.40	Outb	Seal	---	0.60-0.91	-----	0 to 9	H.S.F.S.	X		RM L52E07a	266
XF-91 airplane																
40	3.5	0.58	0.10	S_f/S: 0.08	0.44	Outb		---	0.35-0.95	-----	-14 to 14	H.S.F.S.	X		RM H54G20a	369
YF-84F airplane																
46	4.1 5.5	0.40	0.06	0.18	Var	Var		2.2	0.85, 0.92	-4 to 8	-18 to 0	A-6-ft S.T.	X		RM A51E28	221

TRAILING-EDGE FLAP CONTROLS

SWEPT WINGS (Λ = 39 to 44; 46 to 48)

M = 0.95 to 1.20

Wing				Control				Test conditions					Data		Reference	
Λ	A	λ	t/c	$\frac{c_f}{c}$	$\frac{b_f}{b/2}$	Loc.	Bal.	R_{max}	M	α	δ	Facility	Effn.	HM	Report	Bibl. number
40	4.0	0.50	0.08	Var	Var	Var		0.8	0.60-1.10	0	-3 to 15	L-7-by 10-ft H.S.T.-b.	X		RM L8D21	88
40	4.0	0.50	0.08	0.20	0.50	Outb		7.0	0.50-1.90	0	5, 10	L-P.A.R.D.	X		RM L8E25	92
40	4.0	0.50	0.08	0.20 Thick T.E.	0.50	Outb		1.2	0.60-1.10	0, 3, 5	-5 to 15	L-7-by 10-ft H.S.T.-b.	X		RM L8K02	106
40	4.0	0.50	0.08	0.20 Thick T.E.	Var	Var		7.0	0.50-1.90	0	5	L-P.A.R.D.	X		RM L8K23	112
40	4.0	0.50	0.08	0.20 Thick T.E.	0.50	Outb		1.2	0.60-1.10	0 to 5	-4 to 16	L-7-by 10-ft H.S.T.-b.	X	X	RM L50J06	195

TRAILING-EDGE FLAP CONTROLS

WINGS (A = 39 to 44; 46 to 48)

M = 1.20 to ----

Wing				Control				Test conditions					Data		Reference	
A	A	λ	t/c	$\frac{c_f}{c}$	$\frac{b_f}{b/2}$	Loc.	Bal.	R_{max}	M	α	δ	Facility	Effn.	HM	Report	Bibl. number
47	2.0	0.33	0.04 0.07	S_f/S: Var	0.42, 0.67	Outb		3.2	1.20- 1.70	-3 to 12	-20 to 3	A-6-ft S.T.	X		RM A52J30	284
48	2.5	0.62	0.06	Var	Var	Var		2.1	1.90	-6 to 6	0 to 15	L-9-by 12-in S.B.D.T.	X		RM L51I26	239
40	4.0	0.50	0.08	Var Var profile	0.45	Outb		2.2	1.90	-4 to 4	-14 to 14	L-9-by 12-in S.B.D.T.	X		RM L8D02	85
40	4.0	0.50	0.08	0.20	0.50	Outb		7.0	0.50- 1.90	0	5, 10	L-P.A.R.D.	X		RM L8E25	92
40	4.0	0.50	0.08	0.20 Thick T.E.	Var	Var		7.0	0.50- 1.90	0	5	L-P.A.R.D.	X		RM L8E23	112
40	4.0	0.50	0.08	0.20	0.45	Outb		2.2	1.90	-3 to 3	0 to 13	L-9-by 12-in S.B.D.T.	X	X	RM L8E24a	113
40	4.0	0.50	0.08	0.20	0.40 0.81	Outb bhunt	T.E.	2.2	1.90	0 to 4	0 to 14	L-9-by 12-in S.B.D.T.	X		RM L9A18a	118
40	4.0	0.50	0.08	0.20	0.46	Outb		2.3	1.90	0	0 to 15	L-9-by 12-in S.B.D.T.	X		RM L50E16	182
40	4.0	0.50	0.08	0.20	0.50	Outb		0.6	1.40, 1.60	-4 to 10	-15 to 15	L-4-ft S.P.T.	X	X	RM L50I11	194
40	4.0	0.50	0.08	0.20 Thick T.E.	0.50	Outb		0.6	1.40, 1.60	-4 to 10	-15 to 15	L-4-ft S.P.T.	X	X	RM L50J31	199
40	4.0	0.50	0.08	0.20	0.50	Outb		0.3	1.89	-4 to 16	0, ±10	L-4-ft S.P.T.	X		RM L54G26a	371
46	4.1 5.5	0.40	0.06	0.18	Var	Var		2.2	1.30- 1.70	-4 to 12	-12 to 0	A-6-ft S.T.	X		RM A51E28	221

TRAILING-EDGE FLAP CONTROLS

SWEPT WINGS (Λ = 45)

M = ---- to 0.50

Wing				Control				Test conditions					Data		Reference	
Λ	A	λ	t/c	$\frac{c_f}{c}$	$\frac{b_f}{b/2}$	Loc.	Bal.	R_{max}	M	α	δ	Facility	Effn.	HM	Report	Bibl. number
45	1.6	1.00	0.07	----	Var	Tip		4.5	0.37	-6 to stall	0 to 8	L-7-by 10-ft 300 mph T.	X		RM L9H04	139
45	1.6	1.00	0.07	0.25	Var	Var		6.0	0.27	-4 to stall	0 to 60	L-7-by 10-ft 300 mph T.		X	TN 2169	162
45	1.6	1.00	0.07	0.25	Var	Var		6.0	0.30	-4 to 24	-30 to 30	L-7-by 10-ft 300 mph T.	X	X	TN 2316	207
45	1.9 2.3	1.00	0.07	----	Var	Tip		4.4	0.19	0 to 22	-30 to 30	L-7-by 10-ft 300 mph T.	X		RM L9J28	148
45	1.9 2.3	1.00	0.07	----	Var	Tip		4.4	0.19	-26 to 26	0 to 30	L-7-by 10-ft 300 mph T.	X		RM L50D19	178
45	2.0	0.50	0.07	0.23	1.00	---		7.5	----	-32 to 32	-30 to 6	A-7-by 10-ft T.	X	X	RM A9D05	126
45	2.1	1.00	0.07	0.30 0.25	0.60 Var	Var		4.4	0.26	-6 to 16	-20 to 20	L-7-by 10-ft 300 mph T.	X		Rep 1091	250
45	2.1	1.00	0.07	0.25	Var	Var		3.0	0.26	-6 to 25	-20 to 20	L-7-by 10-ft 300 mph T.	X		RM L9L09a	153
45	3.4	0.51	0.08	0.19	0.22	Mid		4.3	0.07	-1 to 20	-28 to 28	L-F.S.T.	X		RM L50J20	198
45	3.5	0.50	0.08	0.20 Thick T.E.	0.50	Outb		4.3	0.07	0 to 25	0 to 20	L-F.S.T.	X		RM L9B02	119
45	3.5	0.50	0.08	0.20	0.50 0.20	Outb Tip		4.3	0.07	0 to 27	-25 to 25	L-F.S.T.	X		RM L51C07	215
45	3.5	0.50	0.08	0.20	0.50	Outb		4.2	0.07	0 to 27	5 to 20	L-F.S.T.	X		RM L51H15	230
45	3.6	0.42	0.09t 0.15r	0.20	0.34	Outb		18.0	----	0 to stall	-15 to 15	A-40-by 80-ft T.	X		RM A6K15	12
45	4.5	0.50	0.07	0.20	0.50	Outb		1.8	----	-4 to 26	10, 20	A-7-by 10-ft T.	X		RM A7L16	61
45	5.1	0.38	0.07	0.20	0.35	Outb		6.0	0.14	-4 to 30	-20 to 20	L-19-ft P.T.	X	X	RM L51F22	223
45	5.6	0.50	0.08	0.20	0.44	Outb		---	----	-----	---------	L-7-by 10-ft 300 mph T.		X	TN 1711	73
45	6.0	0.50	0.07	0.25	0.40	Outb		8.0	0.20	-8 to 18	-20 to 20	A-40-by 80-ft T.	X		RM A52B19	259

TRAILING-EDGE FLAP CONTROLS

SWEPT WINGS (Λ = 45)

M = ---- to 0.50 (Concluded)

Wing				Control				Test conditions					Data		Reference	
Λ	A	λ	t/c	$\frac{c_f}{c}$	$\frac{b_f}{b/2}$	Loc.	Bal.	R_{max}	M	α	δ	Facility	Effn.	HM	Report	Bibl. number
45	6.0	0.60	0.09	0.25 Δ/2	Var 0.19	Var Tip		1.0	----	-12 to 20	0 to 20	L-7-by 10-ft 300 mph T.	X		RM L54C19	355
45	8.0	0.45	0.10	0.30	Var	Var		---	0.33	-----	-------	U. of Wash. 8-by 12-ft T.	X		TN 2563	210

TRAILING-EDGE FLAP CONTROLS

SWEPT WINGS (Λ = 45)

M = 0.50 to 0.95

Wing				Control				Test conditions					Data		Reference	
Λ	A	λ	t/c	$\frac{c_f}{c}$	$\frac{b_f}{b/2}$	Loc.	Bal.	R_{max}	M	α	δ	Facility	Effn.	HM	Report	Bibl. number
45	2.1	0.48	0.08	0.20	0.44	Outb		---	0.60-0.85	-4 to 4	0 to 15	A-16-ft H.S.T.	P.D.		RM A50B13	171
45	3.0	1.00	0.07	0.25	1.00	----	Horn	8.0	0.30-0.90	-25 to 25	-30 to 0	L-7-by 10-ft H.S.T.	X	X	RM L8J01	103
45	3.0	1.00	0.07	0.25	1.00	----	Horn	8.0	0.50-0.89	-8 to 8	-8 to 0	L-7-by 10-ft H.S.T.		X	RM L50B13	172
45	3.0	0.50	0.07	0.30	1.00	----		4.0	0.25-0.94	0	-16 to 16	A-12-ft P.T.	X	X	RM A51D02	217
45	3.7	1.00	0.09	0.20	0.50 1.00	Var ---		2.5	0.30-0.94	0	0 to 10	L-7-by 10-ft H.S.T.	X		RM L51B16	214
45	4.3	0.48	0.07	0.27	0.43	Outb		11.0	0.40-0.92	-4 to 10	0 to 10	A-16-ft H.S.T.	X	X	RM A9L27	158
45	4.3	0.50	0.08	0.27	0.44	Outb		11.0	0.40-0.93	-4 to 4	0 to 10	A-16-ft H.S.T.	X		RM A50H17	193
45	4.4 5.1	0.37 0.58	0.07	0.20	0.33	Outb		2.0	0.40-0.90	-2 to 10	-10 to 10	L-8-ft H.S.T.	X	X	RM L7I15	52
45	4.5	0.40	0.07	0.20	0.40	Outb		---	0.60-0.92	-2 to 7	-9 to 9	L-8-ft H.S.T.	P.D.		RM L8A30a	82
45	4.6	0.50	0.07	0.26	0.43	Outb		9.5	0.40-0.85	-4 to 8	0 to 10	A-16-ft H.S.T.	X	X	RM A8H12	98
45	5.5	0.53	0.07	0.25	0.25	Outb		5.0	0.25-0.94	0 to 10	-20 to 20	A-16-ft H.S.T.	X	X	RM A53I21	327

TRAILING-EDGE FLAP CONTROLS

SWEPT WINGS (Λ = 45)

M = 0.95 to 1.20

Wing				Control				Test conditions					Data		Reference	
Λ	A	λ	t/c	$\frac{c_f}{c}$	$\frac{b_f}{b/2}$	Loc.	Bal.	R_{max}	M	α	δ	Facility	Effn.	HM	Report	Bibl. number
45	1.8	1.00	0.10	0.15	0.33	Outb	Over-hang	9.5	0.60-1.20	0	-10 to 6	L-P.A.R.D.	X	X	RM L7H26	50
45	2.0	1.00	0.03	0.25	1.00	----		1.5	0.50-1.10	-	-2 to 8	L-wing flow	X		RM L8A22	80
45	2.3 3.7	1.00	0.09 0.12	0.20	0.81	Outb		8.0	0.80-1.60	0	5	L-P.A.R.D.	X		RM L7L01	58
45	3.0	0.50	0.07	0.25	1.00	----		1.1	0.60-1.10	0 to 8	-25 to 5	L-7-by 10-ft H.S.T.-b.	X	X	RM L51F06a	222
45	3.0	0.50	0.07 0.09	0.25	0.31	Outb		9.0	0.60-1.50	0	5	L-P.A.R.D.	X		RM L51I28	240
45	3.0	0.50	0.08	0.25	1.00	----	Over-hang	1.1	0.60-1.10	-4 to 8	-25 to 5	L-7-by 10-ft H.S.T.-b.	X	X	RM L51L11	248
45	3.0	0.50	0.08	0.25	1.00	----	Pad-dle	1.1	0.70-1.10	-4 to 16	-10 to 10	L-7-by 10-ft H.S.T.-s.w.	X	X	RM L51L19	249
45	3.0	0.50	0.08	0.25	1.00	----	Horn	1.1	0.70-1.10	0 to 12	-10 to 5	L-7-by 10-ft H.S.T.-s.w.	X	X	RM L52A11	253
45	3.0	0.50	0.08	0.25	1.00	----	Tab	1.1	0.60-1.10	0 to 16	0, 10	L-7-by 10-ft H.S.T.-b.	X	X	RM L52A23	255
45	3.0	0.50	0.08	0.25	1.00	----	Tab	1.0	0.70-1.10	0 to 16	0 to 18	L-7-by 10-ft H.S.T.-s.w.	X	X	RM L52J09	280
45	3.0	0.60	0.06	0.30	0.88	Outb	Tab	9.0	0.70-1.40	0	-6 to -11	L-P.A.R.D.	X	X	RM L52K07	285
45	3.0	0.50	0.08	0.25	1.00	----	Tab	1.1	0.75-1.20	-2 to 16	-20 to 20	L-7-by 10-ft H.S.T.-b.	X	X	RM L54J28a	379
45	3.7	1.00	0.09	0.20	0.81	Outb		6.0	0.80-1.40	0	5	L-P.A.R.D.	X		RM L7D02	39
45	3.7 Var profile	1.00	0.09	0.20	0.81	Outb		8.0	0.90-1.90	0	3 to 6	L-P.A.R.D.	X		RM L8D12	129
45	3.7	0.50 1.00	0.06 0.09	0.20	0.81	Outb	Seal	5.5	0.60-1.40	0	5	L-P.A.R.D.	X		RM L7F30	45
45	3.7 Var profile	1.00	0.09	0.20	0.81	Outb		10.0	0.70-1.80	0	3, 6	L-P.A.R.D.	X		RM L8B26	84
45	3.7	1.00	0.09	0.20	Var	Var		8.0	0.60-1.80	0	5	L-P.A.R.D.	X		RM L50A27	168

TRAILING-EDGE FLAP CONTROLS

SWEPT WINGS (Λ = 45)

M = 0.95 to 1.20 (Concluded)

Wing				Control				Test conditions					Data		Reference	
Λ	A	λ	t/c	$\frac{c_f}{c}$	$\frac{b_f}{b/2}$	Loc.	Bal.	R_{max}	M	α	δ	Facility	Effn.	HM	Report	Bibl. number
45	3.7	1.00	0.09	0.20	Var	Var		0.8	0.60-1.10	-2 to 2	-5 to 10	L-7-by 10-ft H.S.T.-b.	X		RM L50G03	186
45	3.7	1.00	0.09	0.20	0.81	Outb		7.0	0.70-1.70	0	5	L-P.A.R.D.	X		RM L50G14b	188
45	3.7	1.00	0.06	0.20 Thick T.E.	0.81	Outb		7.0	0.70-1.60	0	5	L-P.A.R.D.	X		RM L51G27	226
45	3.7	1.00	0.09	All-moving wing				8.0	0.60-1.80		i_w = 0 to 1	L-P.A.R.D.	X		RM L51H03	228
45	3.7	1.00	0.09	0.20	0.40	Outb Inb		5.5	0.60-1.50	0	5	L-P.A.R.D.	X		RM L54L17a	393
45	4.0	0.60	0.06	0.30	Var	Var		1.0	0.60-1.10	0 to 6	-28 to 28	L-7-by 10-ft H.S.T.-b.	X		RM L9F29a	135
45	4.0	0.60	0.06	Var	Var	Var		7.0	0.70-1.60	0	2 to 18	L-P.A.R.D.	X		RM L51K16	243
45	4.0	0.60	0.06	All-moving wing, skewed axis				0.8	0.60-1.10	-20 to 20	0 to 30	L-7-by 10-ft H.S.T.-b.	X	X	RM L52D28	264
45	4.0	0.60	0.06	All-moving wing, skewed axis			Tab	0.7	0.60-1.20	-30 to 30	0 to 30	L-7-by 10-ft H.S.T.-b.	X	X	RM L53H13	320
45	4.0	0.60	0.06	---	Var	Tip		8.0	0.60-1.40	0	-------	L-P.A.R.D.	X		RM L54G13	367
45	4.9	0.45 1.00	0.09	$\Delta/2$	0.23	Tip		5.0	0.50-1.70	0	5	L-P.A.R.D.	X		RM L50F21	185
45	8.0	0.50 1.00	0.12	0.20	0.43 0.30	Outb Inb		4.0	0.60-1.60	0	5	L-P.A.R.D.	X		RM L53L11	342

TRAILING-EDGE FLAP CONTROLS

SWEPT WINGS (Λ = 45)

M = 1.20 to ----

Wing				Control				Test conditions					Data		Reference	
Λ	A	λ	t/c	$\frac{c_f}{c}$	$\frac{b_f}{b/2}$	Loc.	Bal.	R_{max}	M	α	δ	Facility	Effn.	HM	Report	Bibl. number
45	2.3 3.7	1.00	0.09 0.12	0.20	0.81	Outb		8.0	0.80- 1.60	0	5	L.P.A.R.D.	X		RM L7L01	58
45	3.0	0.50	0.07 0.09	0.25	0.31	Outb		9.0	0.60- 1.50	0	5	L-P.A.R.D.	X		RM L51I28	240
45	3.0	0.60	0.06	0.30	0.86	Outb	Tab	9.0	0.70- 1.40	0	-11 to -6	L-P.A.R.D.	X	X	RM L52K07	285
45	3.7	1.00	0.09	0.20	0.81	Outb		6.0	0.80- 1.40	0	5	L-P.A.R.D.	X		RM L7D02	39
45	3.7	0.50 1.00	0.06 0.09	0.20	0.81	Outb	Seal	5.5	0.80- 1.40	0	5	L-P.A.R.D.	X		RM L7F30	45
45	3.7 Var profile	1.00	0.09	0.20	0.81	Outb		10.0	0.70- 1.80	0	3, 6	L-P.A.R.D.	X		RM L8B26	84
45	3.7 Var profile	1.00	0.09	0.20	0.81	Outb		8.0	0.80- 1.90	0	3, 6	L-P.A.R.D.	X		RM L9D12	129
45	3.7	1.00	0.09	0.20	Var	Var		7.0	0.60- 1.80	0	5	L-P.A.R.D.	X		RM L50A27	168
45	3.7	1.00	0.09	0.20	0.81	Outb		7.0	0.70- 1.70	0	5	L-P.A.R.D.	X		RM L50G14b	188
45	3.7	1.00	0.06	0.20 Thick T.E.	0.81	Outb		7.0	0.70- 1.60	0	5	L-P.A.R.D.	X		RM L51G27	226
45	3.7	1.00	0.09	All-moving wing				8.0	0.60- 1.80		i_w = 0 to 1	L-P.A.R.D.	X		RM L51H03	228
45	3.7	1.00	0.09	0.20	0.40	Outb Inb		5.5	0.60- 1.50	0	5	L-P.A.R.D.	X		RM L54L17a	383
45	4.0	0.60	0.06	0.15 0.30	Var	Var		7.0	0.70- 1.60	0	2 to 18	L-P.A.R.D.	X		RM L51K16	243
45	4.0	0.60	0.06		Var	Tip		8.0	0.60- 1.40	0	-------	L-P.A.R.D.	X		RM L54G13	367
45	4.9 5.3	0.45 1.00	0.09	$\Delta/2$	0.20	Tip		5.0	0.50- 1.70	0	5	L-P.A.R.D.	X		RM L50F21	185
45	8.0	0.50 1.00	0.12	0.20	0.43 0.30	Outb Inb		4.0	0.60- 1.60	0	5	L-P.A.R.D.	X		RM L53L11	342

TRAILING-EDGE FLAP CONTROLS

SWEPT WINGS (Λ = 49 to --)

M = ---- to 0.50

Wing				Control				Test conditions					Data		Reference	
Λ	A	λ	t/c	$\frac{c_f}{c}$	$\frac{b_f}{b/2}$	Loc.	Bal.	R_{max}	M	α	δ	Facility	Effn.	HM	Report	Bibl. number
60	1.9	0.49	0.04t 0.08r	0.25	0.32	Outb		2.0	0.15	-4 to 36	-20 to 20	L-7-by 10-ft 300 mph T.	X		RM L50C17a	173
60	2.0	0.33	F.P. 0.01r	S_f/S: 0.20	1.00	----		1.8	----	-6 to 36	0, -20	A-7-by 10-ft T.	X		RM A7L11	60
57 49	2.3 3.5	0.27 0.50	0.08 0.08	0.25 0.22	0.85 Var	Inb Var		---	----	-----	------	L-7-by 10-ft 300 mph T.		X	TN 1711	73
62	2.5	0.50	----	0.30	0.50	Outb		---	----	-8 to 40	------	L-F.F.T.	X		TN 1278	22
62	2.5	0.50	----	0.30	0.50	Outb		---	----	-8 to 28	±18	L-F.F.T.	X		TN 1288	24
50	2.8	0.62	0.06	0.18	0.50	Outb		5.5	0.11	0 to 29	-25 to 25	L-19-ft P.T.	X		RM L53B26	299
49	2.9	0.50	0.09	$\Delta/2$	0.21	Tip	Tab	2.4	0.19	-45 to 35	-20 to 20	L-7-by 10-ft 300 mph T.	X		RM L51H16a	231
49	3.0	0.50	0.08	0.26	0.40	Outb	Over-hang	4.5	0.33	0 to 29	-30 to 30	L-7-by 10-ft 300 mph T.	X	X	RM L52G03	272
49	3.4	0.40	0.09	0.20 Var profile	0.40	Var		2.2	0.12	-4 to 29	-30 to 30	L-7-by 10-ft 300 mph T.	X	X	RM L8H20	99
61	3.5	0.25	0.05	S_f/S: 0.13	0.50	Outb		2.0	0.20	-10 to 20	-40 to 5	A-12-ft P.T.	X		RM A8D20	87
61	3.5	0.25	0.05	0.25	0.50	Outb		8.0	----	0 to 38	-40 to 40	A-7-by 10-ft T.	X		RM A9C21	123
60	3.5	0.45	0.05	0.25	0.43	Outb		10.0	----	-8 to 28	-10 to 10	A-40-by 80-ft T.	X		RM A52A14a	254
49	3.6	0.40	0.09	0.16	Var	Var		2.2	0.12	-4 to 29	-30 to 30	L-7-by 10-ft 300 mph T.	X	X	RM L8F29	95

TRAILING-EDGE FLAP CONTROLS

SWEPT WINGS (Λ = 49 to --)

M = 0.50 to 0.95

Wing				Control				Test conditions					Data		Reference	
Λ	A	λ	t/c	$\frac{c_f}{c}$	$\frac{b_f}{b/2}$	Loc.	Bal.	R_{max}	M	α	δ	Facility	Effn.	HM	Report	Bibl. number
49	3.1	0.50	0.08	0.20	0.40-0.50	Var		9.0	0.30-0.91	-4 to 16	-28 to 28	L-7-by 10-ft H.S.T.	X	X	RM L9D06	127
61	3.5	0.25	0.05	S_f/S: 0.13	0.50	Outb		2.0	0.60-0.93	-10 to 20	-40 to 5	A-12-ft P.T.	X		RM A8D20	87
61	3.5	0.25	0.05	S_f/S: 0.13	0.50	Outb		2.0	0.60-0.93	-8 to 19	-30 to 30	A-12-ft P.T.	X	X	RM A9I27	145
61	3.5	0.25	0.05	0.30	0.38	Inb		1.5	0.60-0.90	0 to 14	-25 to 25	A-6-ft S.T.	X	X	RM A51I18	238

TRAILING-EDGE FLAP CONTROLS

SWEPT WINGS (Λ = 49 to --)

M = 0.95 to 1.20

Wing				Control				Test conditions					Data		Reference	
Λ	A	λ	t/c	$\frac{c_f}{c}$	$\frac{b_f}{b/2}$	Loc.	Bal.	R_{max}	M	α	δ	Facility	Effn.	HM	Report	Bibl. number
60	2.0	0.33	0.02r F.P.	S_f/S: 0.20	1.00	---		1.3	0.40-1.05	-9 to -1	0 to 19	A-wing flow	X		RM A7G18	46
60	2.0	0.60	0.06	0.30	Var	Var		1.0	0.60-1.10	-8 to 8	0, 10	L-7-by 10-ft H.S.T.-b.	X		RM L50E09	180
49	2.9	0.50	0.09		Var	Tip		1.5	0.60-1.10	-16 to 16	0 to 45	L-7-by 10-ft H.S.T.-b.	X		RM L51H27	233
49	3.1	0.50	0.09	0.20	0.39	Outb		1.0	0.60-1.10	-28 to 28	-30 to 0	L-7-by 10-ft H.S.T.-b.		X	RM L51H29	234
61	3.5	0.25	0.05	0.30	Var	Var		6.8	0.60-1.60	0	5	L-P.A.R.D.	X		RM L51D18a	218
60	4.0	0.60	0.06	0.30	Var	Var		1.0	0.60-1.15	-6 to 6	0, 5, 10	L-7-by 10-ft H.S.T.-b.	X		RM L50A17	167

TRAILING-EDGE FLAP CONTROLS

SWEPT WINGS (Λ = 49 to --)

M = 1.20 to ----

Wing				Control				Test conditions					Data		Reference	
Λ	A	λ	t/c	$\frac{c_f}{c}$	$\frac{b_f}{b/2}$	Loc.	Bal.	R_{max}	M	α	δ	Facility	Effn.	HM	Report	Bibl. number
49	2.5	0.62	0.06	0.25	0.52	Outb		2.2	1.40-1.90	-4 to 12	0 to 9	L-9-by 12-in S.B.D.T.	X		RM L50L06a	205
61	3.5	0.25	0.05	0.30	0.50	Outb		1.5	1.20-1.70	0 to 10	-30 to 30	A-6-ft S.T.	X	X	RM A50A31a	169
61	3.5	0.25	0.05	0.30	0.50	Outb		1.5	1.20-1.70	0, 5, 10	-30 to 10	A-6-ft S.T.	X		RM A50K07	201
61	3.5	0.25	0.06	0.30	Var	Var		6.6	0.60-1.60	0	5	L-P.A.R.D.	X		RM L51D18a	218
61	3.5	0.25	0.05	0.30	0.38	Inb		1.5	1.20-1.70	-4 to 14	-25 to 25	A-6-ft S.T.	X	X	RM A51I18	238

TRAILING-EDGE FLAP CONTROLS

TRIANGULAR WINGS (Λ_{LE} = 60, 63)

M = ---- to 0.50

Wing				Control				Test conditions					Data		Reference	
Λ	A	λ	t/c	$\frac{c_f}{c}$	$\frac{b_f}{b/2}$	Loc.	Bal.	R_{max}	M	α	δ	Facility	Effn.	HM	Report	Bibl. number
63Δ	2.0	0.00	F.P. 0.01r	0.20	1.00	---		1.8	----	0 to 32	0, 20	A-7-by 10-ft T.	X		RM A7L11	60
63Δ	2.0	0.00	0.05	S_f/S: 0.15	0.70	Inb		15.0	0.13	0 to 16	12	A-40-by 80-ft T.	X		RM A9H04	138
60Δ	2.3	0.00	0.065	S_f/S: 0.08	0.78	Outb		2.0	0.17	-4 to 37	-20 to 20	L-stability T.	X	X	RM L50G17	189
60Δ	2.3	0.00	0.10	----	Var	Var		6.0	0.07	-5 to 33	-30 to 30	L-F.S.T.	X	X	RM L51A26	212
60Δ	2.3	0.00	0.065	Δ/2	Var	Tip		2.0	0.17	-4 to 37	0, -20, -30	L-stability T.	X		RM L51B09	213
60Δ	2.3	0.00	0.065	Δ/2	Var	Tip		2.0	0.17	-4 to 36	-40 to 10	L-stability T.	X		RM L51D20a	219
60Δ	2.3	0.00	0.065	Δ/2	Var	Tip		2.0	0.17	-4 to 36	-40 to 20	L-stability T.	X		RM L51I10	236
60Δ	2.3	0.00	0.065		0.31	Tip		2.0	0.17	-4 to 36	-40 to 10	L-stability T.	X		RM L51K08	242
63Δ	2.0	0.00	0.05	0.20	0.52	Inb		14.0	0.13	0 to 24	0, 5, 10	A-40-by 80-ft T.	X		RM A51L03	245
63Δ	2.0	0.00	0.05	S_f/S: 0.57	1.00 Blunt T.E.	---	Horn	5.0	0.29	-8 to 4	-30 to 0	A-7-by 10-ft T.		X	RM A52F13	269
60Δ	2.3	0.00	0.065	Δ/2	0.25 0.40	Tip		---	----	-----	--------	L-spin T.			RM L52K24a	288
60Δ	2.3	0.00	0.03	Δ/2	Var	Tip	Horn	2.3	0.10	-4 to 36	-40 to 30	L-F.S.T.	X	X	RM L53C18	301
60Δ	2.3	0.00	0.06	Δ, Δ/2	Var	Tip		9.0	0.15	-12 to 20	-20 to 20	L-L.T.P.T.	X	X	RM L53F16a	314
60Δ	2.3	0.00	0.03	S_f/S: 0.10	0.42	Outb	Horn	2.3	0.10	-4 to 36	-30 to 30	L-F.S.T.	X		RM L53G09b	317
60Δ mod.	1.4	0.25	0.03	Δ/2	0.36	Tip		2.9	0.15-0.92	-10 to 42	-26 to 20	L-L.T.P.T.	X	X	RM L53G31a	319
60Δ	2.3	0.00	0.03	S_f/S: 0.10	0.46	Outb	Horn	10.0	0.09	-6 to 24	-40 to 30	L-F.S.T.	X	X	RM L54B03	350
60Δ	2.3	0.00	0.03	Δ/2	0.22 0.32	Tip		10.0	0.09	-6 to 24	-40 to 30	L-F.S.T.	X	X	RM L54B03	350

TRAILING-EDGE FLAP CONTROLS

TRIANGULAR WINGS (Λ_{LE} = 60, 63)

M = ---- to 0.60 (Concluded)

Wing				Control				Test conditions					Data		Reference	
Λ	A	λ	t/c	$\frac{c_f}{c}$	$\frac{b_f}{b/2}$	Loc.	Bal.	R_{max}	M	α	δ	Facility	Effn.	HM	Report	Bibl. number
60LE -5TE	2.2		0.04	S_f/S: 0.10	0.71	Mid		0.8	----	0 to 90	±15	L-F.F.T.	X		RM L54G22a	370
60Δ	2.3	0.00	0.03	S_f/S: 0.10	0.42	Outb	Horn	2.3	0.10	-4 to 36	0, ±10	L-F.S.T.	X	X	RM L54H03	372

TRAILING-EDGE FLAP CONTROLS

TRIANGULAR WINGS (Δ_{LE} = 60, 63)

M = 0.50 to 0.95

Wing				Control				Test conditions					Data		Reference	
Λ	A	λ	t/c	$\frac{c_f}{c}$	$\frac{b_f}{b/2}$	Loc.	Bal.	R_{max}	M	α	δ	Facility	Effn.	HM	Report	Bibl. number
63Δ	2.0	0.00	0.05	S_f/S: 0.25	1.00	---		15.0	0.50-0.95	-10 to 30	-24 to 24	A-12-ft P.T.	X	X	RM A8E03	89
63Δ	2.0	0.00	0.05	Δ	0.64	Tip		3.2	0.60-0.95	-10 to 30	-26 to 4	A-12-ft P.T.	X	X	RM A8E21	91
60Δ	2.3	0.00	0.065	S_f/S: 0.20	0.76	Outb		1.0	0.50-0.95	-4 to 14	-10 to 0	A-1-by 3.5-ft H.S.T.	X		RM A9B16	120
63Δ	2.0	0.00	0.05	S_f/S: 0.25	0.82	Outb Thick T.E.		3.0	0.60-0.90	-4 to 16	-25 to 5	A-6-ft S.T.	X	X	RM A52D01c	261
63Δ	2.0	0.00	0.05	S_f/S: 0.14	0.64	Mid	Var	4.4	0.60-0.90	-4 to 18	-28 to 4	A-6-ft S.T.	X	X	RM A52L04	290
60Δ mod.	1.4	0.25	0.05	$\Delta/2$	0.36	Tip		2.9	0.15-0.92	-10 to 42	-26 to 20	L-L.T.P.T.	X	X	RM L53G31a	319
63Δ	2.0	0.00	0.05	S_f/S: 0.14	0.64	Mid	Paddle	3.0	0.60-0.90	-4 to 10	-16 to 4	A-6-ft S.T.	X	X	RM A53K20	339
60Δ XF-92 airplane	2.3	0.00	0.065	S_f/S: 0.18	0.85	Outb		---	0.70-0.95	2 to 12	2 to 6	H.S.F.S.	X		RM H54J25a	378
60Δ XF-92 airplane	2.3	0.00	0.065	S_f/S: 0.18	0.85	Outb		---	0.30-0.94	3, 12	-12 to 10	H.S.F.S.	X		RM H55A17	384

TRAILING-EDGE FLAP CONTROLS

TRIANGULAR WINGS (Λ_{LE} = 60, 63)

M = 0.95 to 1.20

Wing				Control				Test conditions					Data		Reference	
Λ	A	λ	t/c	$\frac{c_f}{c}$	$\frac{b_f}{b/2}$	Loc.	Bal.	R_{max}	M	α	δ	Facility	Effn.	HM	Report	Bibl. number
63Δ	2.0	0.00	F.P. 0.02r	S_f/S: 0.20	1.00 ----	--- tip		1.3	0.50-1.10	-6 to 8	0 to 18	A-wing flow	X		RM A7G18	46
60Δ	2.3	0.00	0.06	S_f/S: 0.13	0.78	Outb		8.0	0.60-1.80	0	5	L-P.A.R.D.	X		RM L8D16	86
60Δ	2.3	0.00	0.06	S_f/S: 0.13	0.78	Outb		8.0	0.60-1.80	0	5	L-P.A.R.D.	X		RM L9J26	147
60Δ	2.3	0.00	0.06	Δ, Δ/2	Var	Tip		8.0	0.60-1.80	0	5	L-P.A.R.D.	X		RM L9J26	147
60Δ	2.3	0.00	0.065	S_f/S: 0.16	0.78	Outb		20.0	0.80-1.20	0 to 5	-5 to 5	L-P.A.R.D.	X	X	RM L9L07	152
63Δ	2.0	0.00	0.05	S_f/S: 0.20	1.00	----		1.0	0.50-1.20	0, 8	-4 to 20	A-wing flow	X	X	RM A50E10	181
60Δ	2.3	0.00	0.06	Δ	1.00	Tip	Over-hang	1.5	0.60-1.10	-2 to 6	-10 to 10	L-7-by 10-ft H.S.T.-b.	X	X	RM L50L01	204
60Δ	2.3	0.00	0.06 0.09	Δ/2	0.25	Tip		15.0	0.70-1.50	0	-5 to 5	L-P.A.R.D.	X	X	RM L51G18	225
60Δ	2.3	0.00	0.06	S_f/S: 0.36	1.00	---	Horn	1.0	0.60-1.10	-2 to 8	-10 to 10	L-7-by 10-ft H.S.T.-b.	X	X	RM L51H22	232
60Δ	2.3	0.00	0.065	S_f/S: 0.16	0.78	Outb		24.0	0.70-1.70	2 to 6	-9 to 0	L-P.A.R.D.	X		RM L51I04	235
60Δ	2.3	0.00	F.P. 0.02r	Δ/2	0.25	Tip		14.0	0.70-1.40	0	-10 to 10	L-P.A.R.D.		X	RM L51I14	237
60Δ	2.3	0.00	0.03	Δ/2	0.25	Tip		13.0	0.50-1.40	-4 to 11	-10 to 10	L-P.A.R.D.		X	RM L52H06	275
60Δ	2.3	0.00	F.P. 0.02r	Δ/2	0.25	Tip		16.0	0.70-1.70	0 to 10	±10	L-P.A.R.D.	X		RM L52H14	278
60Δ	2.3	0.00	0.045	S_f/S: 0.25	0.67	Inb	(a)	1.7	0.60-1.10	-6 to 15	-8 to 8	L-7-by 10-ft H.S.T.-b.	X	X	RM L53E28a	312
60Δ mod.	2.0	0.10	0.07	S_f/S: 0.08	0.75	Outb	Over-hang	13.0	0.50-1.30	-16 to 16	-5 to 5	L-P.A.R.D.		X	RM L53I04	323
60Δ	2.3	0.00	----	----	----	Inb		----	0.70-1.80	-----	-------	L-P.A.R.D.	X		RM L53I21a	329
				Bellows flap												
60Δ	2.3	0.00	0.04	Var	0.66	Inb		1.5	0.60-1.10	-6 to 15	-30 to 30	L-7-by 10-ft H.S.T.-b.	X	X	RM L54B06	351

[a]Single, tandem flap.

TRAILING-EDGE FLAP CONTROLS

TRIANGULAR WINGS (Λ_{LE} = 60, 63)

M = 0.95 to 1.20 (Concluded)

Wing				Control				Test conditions					Data		Reference	
Λ	A	λ	t/c	$\frac{c_f}{c}$	$\frac{b_f}{b/2}$	Loc.	Bal.	R_{max}	M	α	δ	Facility	Effn.	HM	Report	Bibl. number
60LE 30TE	1.7	0.00	F.P. 0.03r	$\Delta/2$	0.25	Tip		14.0	0.50-1.30	±3 to ±14	±13	L-P.A.R.D.		X	RM L54C10	353
60Δ	2.3	0.00	0.04	S_f/S: 0.08	0.54	Inb		3.0	0.75-1.20	-12 to 12	0 to 40	L-9-by 12-in S.B.D.T.	X	X	RM L54G12a	366
60Δ	2.3	0.00	F.P. 0.02r	S_f/S: 0.05	0.40	Inb Bellows flap		13.0	0.80-1.80	0	0 to 20	L-P.A.R.D.	X	X	RM L54H17	374
60Δ	2.3	0.00	0.04	S_f/S: 0.08	0.40	Mid	Tab	3.5	0.75-1.96	0 to 12	0 to 20	L-9-by 12-in S.B.D.T.	X	X	RM L54K16a	381

TRAILING-EDGE FLAP CONTROLS

TRIANGULAR WINGS (A_{LE} = 60, 63)

M = 1.20 to ----

Wing				Control				Test conditions					Data		Reference	
Λ	A	λ	t/c	$\frac{c_f}{c}$	$\frac{b_f}{b/2}$	Loc.	Bal.	R_{max}	M	α	δ	Facility	Effn.	HM	Report	Bibl. number
60Δ	2.3	0.00	0.065	S_f/S: 0.20	0.76	Outb		0.7	1.50	-6 to 10	-18 to 0	A-1-by 3-ft S.T.	X		RM A7J05	54
60Δ	2.3	0.00	0.06	S_f/S: 0.13	0.78	Outb		8.0	0.60-1.80	0	5	L-P.A.R.D.	X		RM L8D16	86
60Δ	2.3	0.00	0.09	All-moving wing				1.4	1.90	-8 to 6	i_w = 0, 4	L-9-by 12-in S.B.D.T.	X		RM L8H04	97
60Δ	2.3	0.00	0.065	S_f/S: 0.20	0.76	Outb		1.0	1.20-1.50	-4 to 10	-10 to 0	A-1-by 3.5-ft H.S.T.	X		RM A9B16	120
60Δ	2.3	0.00	F.P. 0.02r	$\Delta/2$	Thick T.E. 0.26	Tip		4.0	1.80	-1 to 3	0 to 10	L-9-by 12-in S.B.D.T.	X	X	RM L9H05	140
60LE 30TE	1.7	0.00	F.P. 0.03r	---	0.23	Tip		4.9	1.90	-5 to 3	0 to 10	L-9-by 12-in S.B.D.T.	X	X	RM L9H26	144
60Δ	2.3	0.00	0.06	S_f/S: 0.13	0.78	Outb		8.0	0.60-1.80	0	5	L-P.A.R.D.	X		RM L9J26	147
60Δ	2.3	0.00	0.06	Δ, $\Delta/2$	----	Tip		8.0	0.60-1.80	0	5	L-P.A.R.D.	X		RM L9J26	147
60Δ	2.3	0.00	F.P. 0.02r	0.25 $\Delta/2$	0.35 0.27	Mid tip		4.0	1.90	-2 to 8	0 to 16	L-9-by 12-in S.B.D.T.	X		RM L50K03	200
60Δ	2.3	0.00	F.P. 0.02r	$\Delta/2$	0.25	Tip		15.0	0.70-1.50	0	-5 to 5	L-P.A.R.D.	X	X	RM L51G18	225
60Δ	2.3	0.00	0.065	S_f/S: 0.16	0.78	Outb		25.0	0.70-1.70	2 to 6	-9 to 0	L-P.A.R.D.	X		RM L51I04	235
60Δ	2.3	0.00	-----	$\Delta/2$	0.25	Tip		14.0	0.70-1.40	0	-10 to 10	L-P.A.R.D.		X	RM L51I14	237
63Δ	2.0	0.00	0.05	S_f/S: 0.25	0.82 Thick T.E.	Outb		3.0	1.30-1.70	-10 to 30	-24 to 24	A-6-ft S.T.	X	X	RM A52D01c	261
60Δ	2.3	0.00	0.03	$\Delta/2$	0.25	Tip		15.0	0.50-1.40	-4 to 11	-10 to 10	L-P.A.R.D.		X	RM L52H06	275
60Δ	2.3	0.00	F.P. 0.02r	$\Delta/2$	0.26	Tip		4.0	1.40, 1.90	0 to 24	-30 to 30	L-9-by 12-in S.B.D.T.	X	X	RM L52H13	277
60Δ	2.3	0.00	-----	$\Delta/2$	0.25	Tip		16.0	0.70-1.70	0 to 10	+10	L-P.A.R.D.	X		RM L52H14	278
60Δ	2.3	0.00	0.03	Var	Var	Var	Var	4.0	1.60	0 to 12	-30 to 30	L-4-ft S.P.T.		X	RM L52K28	289

TRAILING-EDGE FLAP CONTROLS

TRIANGULAR WINGS (Λ_{LE} = 60, 63)

M = 1.20 to ---- (Concluded)

Wing				Control				Test conditions					Data		Reference	
Λ	A	λ	t/c	$\frac{c_f}{c}$	$\frac{b_f}{b/2}$	Loc.	Bal.	R_{max}	M	α	δ	Facility	Effn.	HM	Report	Bibl. number
63Δ	2.0	0.00	0.05	S_f/S: 0.15	0.83	Outb	Var	4.4	1.20-1.90	-4 to 18	-28 to 4	A-6-ft S.T.	X	X	RM A52L04	290
60Δ	2.3	0.00	0.03	Var	Var	Var	Tab	4.0	1.60	-12 to 12	-30 to 30	L-4-ft S.P.T.		X	RM L53D14	305
60Δ mod	1.4	0.27	0.03	$\Delta/2$	0.36	Tip		2.9	1.40-1.90	0 to 25	-25 to 20	L-9-by 12-in S.B.D.T.	X	X	RM L53G31a	319
60Δ mod	2.0	0.10	0.07	S_f/S: 0.08	0.75	Outb	Over-hang	13.0	0.50-1.30	-4 to 4	-5 to 5	L-P.A.R.D.		X	RM L53I04	323
60Δ	2.3	0.00	----	Bellows flap				----	0.70-1.80	-----	-------	L-P.A.R.D.	X		RM L53I21a	329
60Δ	2.3	0.00	F.P. 0.02r	Var	Var	Var		2.0	1.40-2.00	-12 to 12	0 to 20	L-9-by 12-in S.B.D.T.	X	X	RM L53J08a	335
63Δ	2.0	0.00	0.05	S_f/S: 0.14	0.64	Mid	Pad-dle	3.0	1.30-1.90	-4 to 10	-16 to 4	A-6-ft S.T.	X	X	RM A53K20	339
60Δ	2.3	0.00	0.03	S_f/S: 0.25	1.00	---		4.0	1.60	0, 6, 12	-30 to 30	L-4-ft S.P.T.	X P.D.	X	RM L53L17	344
60LE 30TE	1.7	0.00	F.P. 0.03r	$\Delta/2$	0.25	Tip		14.0	0.50-1.30	-10 to 10	-10 to 10	L-P.A.R.D.		X	RM L54C10	353
60Δ	2.3	0.00	F.P. 0.03r	--- $\Delta/2$	0.43 0.43	Outb Tip		4.2	1.60	0 to 15	-30 to 30	L-4-ft S.P.T.	X P.D.	X	RM L54E25	361
60Δ	2.3	0.00	0.04	S_f/S: 0.08	0.54	Inb		3.0	1.40-2.00	-12 to 12	0 to 40	L-9-by 12-in S.B.D.T.	X	X	RM L54G12a	366
60Δ	2.3	0.00	F.P. 0.03r	$\Delta/2$	0.44	Tip		0.8	6.90	0 to 8	-14 to 14	L-11-in H.T.		X	RM L54H16a	373
60Δ	2.3	0.00	F.P. 0.02r	S_f/S: 0.05	0.40	Inb	Bellows flap	13.0	0.80-1.80	0	0 to 20	L-P.A.R.D.	X	X	RM L54H17	374
60Δ	2.3	0.00	0.04	S_f/S: 0.08	0.40	Mid	Tab	3.5	0.75-1.96	0 to 12	0 to 20	L-9-by 12-in S.B.D.T.	X	X	RM L54K16a	381

TRAILING-EDGE FLAP CONTROLS

TRIANGULAR WINGS (A_{LE} = 45)

M = ---- to 0.50

Wing				Control				Test conditions					Data		Reference	
A	A	λ	t/c	$\frac{c_f}{c}$	$\frac{b_f}{b/2}$	Loc.	Bal.	R_{max}	M	α	δ	Facility	Effn.	HM	Report	Bibl. number
45Δ	4.0	0.00	0.05	S_f/S: var	0.54 0.33	Inb outb		11.0	0.13	0 to 9	±10	A-40-by 80-ft T.	X		RM A52K13	286
45Δ mod.	2.0	0.30 0.20	0.05	S_f/S: var	0.78	Outb		13.0	0.13	0 to 20	±10	A-40-by 80-ft T.	X		RM A52L16	293

TRAILING-EDGE FLAP CONTROLS

TRIANGULAR WINGS (Λ_{LE} = 45)

M = 0.50 to 0.95

Wing				Control				Test conditions					Data		Reference	
Λ	A	λ	t/c	$\frac{c_f}{c}$	$\frac{b_f}{b/2}$	Loc.	Bal.	R_{max}	M	α	δ	Facility	Effn.	HM	Report	Bibl. number
No reports available																

TRAILING-EDGE FLAP CONTROLS

TRIANGULAR WINGS (Λ_{LE} = 45)

M = 0.95 to 1.20

Wing				Control				Test conditions					Data		Reference	
Λ	A	λ	t/c	$\frac{c_f}{c}$	$\frac{b_f}{b/2}$	Loc.	Bal.	R_{max}	M	α	δ	Facility	Effn.	HM	Report	Bibl. number
45Δ	4.0	0.00	0.06	S_f/S: 0.19	0.82 0.83	Outb tip		8.0	0.60-1.80	0	5	L-P.A.R.D.	X		RM L8D16	86
45Δ	4.0	0.00	0.06	S_f/S: 0.19	0.82 Δ,Δ/2	Outb tip		8.0	0.60-1.90	0	5	L-P.A.R.D.	X		RM L9J26	147
45Δ	4.0	0.00	0.08	All-moving wing				1.1	0.50-1.30	0 to 10	i_w = 0 to 10	A-1-by 3.5-ft H.S.T.	X		RM A9L01	151
45Δ	4.0	0.00	0.09	All-moving wing				6.0	0.60-1.80	0	i_w = 0.7	L-P.A.R.D.	X		RM L51H03	228
45Δ	4.0	0.00	F.P. 0.01r	S_f/S: 0.13	0.83	Outb		6.0	0.70-1.60	0	5	L-P.A.R.D.	X		RM L51L05	246

TRAILING-EDGE FLAP CONTROLS

TRIANGULAR WINGS (Λ_{LE} = 45)

M = 1.20 to ----

Wing				Control				Test conditions					Data		Reference	
Λ	A	λ	t/c	$\frac{c_f}{c}$	$\frac{b_f}{b/2}$	Loc.	Bal.	R_{max}	M	α	δ	Facility	Effn.	HM	Report	Bibl. number
45Δ	4.0	0.00	0.06	S_f/S: 0.19	0.82	Outb		8.0	0.60-1.80	0	5	L-P.A.R.D.	X		RM L8D16	86
45Δ	4.0	0.00	0.06	S_f/S: 0.19	0.82 $\Delta,\Delta/2$	Outb, tip		6.0	0.60-1.90	0	5	L-P.A.R.D.	X		RM L9J26	147
45Δ	4.0	0.00	0.09	All moving wing				8.0	0.60-1.80	0	i_w = 0.7	L-P.A.R.D.	X		RM L51H05	228
45Δ	4.0	0.00	F.P. 0.01r		0.82	Outb		6.0	0.70-1.60	0	5	L-P.A.R.D.	X		RM L51L05	246
45Δ	4.0	0.00	0.08	All moving wing				5.7	1.50, 2.00	-5 to 28	i_w = 0 to 16	A-1-by 3-ft S.T.	X	X	RM A53F22	315

TRAILING-EDGE FLAP CONTROLS

TRIANGULAR WINGS ($A_{LE} \neq 45$, 60, or 63)

M = ---- to 0.50

Wing				Control				Test conditions					Data		Reference	
Λ	A	λ	t/c	$\frac{c_f}{c}$	$\frac{b_f}{b/2}$	Loc.	Bal.	R_{max}	M	α	δ	Facility	Effn.	HM	Report	Bibl. number
53Δ mod	2.0	0.20	0.05	S_f/S: 0.14	0.81	Outb		15.0	0.13	-2 to 26	0, 40	A-40-by 80-ft T.	X		RM A52L16	293
53Δ	3.0	0.00	0.05	S_f/S: 0.12	0.62	Inb		13.0	0.13	-2 to 25	0, 40	A-40-by 80-ft T	X		RM A52L15	291

TRAILING-EDGE FLAP CONTROLS

TRIANGULAR WINGS ($\Lambda_{LE} \neq 45$, 60, or 63)

M = 0.50 to 0.95

Wing				Control				Test conditions					Data		Reference	
A	A	λ	t/c	$\frac{c_f}{c}$	$\frac{b_f}{b/2}$	Loc.	Bal.	R_{max}	M	α	δ	Facility	Effn.	HM	Report	Bibl. number
55	3.5	0.00	0.05	0.30	0.60 Thick T.E.	Outb	Horn	2.0	0.70-0.82	-20 to 20	0 to 20	L-9-by 12-in S.B.D.T.	X	X	RM L52L15	292
-27TE 56LE	2.0	0.00	0.05	0.25	0.82	Outb	Tab	3.0	0.60-0.95	-4 to 24	0, 15	A-12-ft P.T.	X	X	RM A53C20	302
-27TE 56LE	2.0	0.00	0.05	0.25	0.82	Outb	Tab	3.0	0.60-0.95	-4 to 24	0, 10	A-12-ft P.T.	X	X	RM A53F03	313
53Δ	3.0	0.00	0.035	S_f/S: 0.067	0.44	Inb		2.5	0.60-0.95	-4 to 24	0, 10, 20	A-12-ft P.T.	X		RM A54L07	382

TRAILING-EDGE FLAP CONTROLS

TRIANGULAR WINGS ($\Lambda_{LE} \neq 45$, 60, or 65)

M = 0.95 to 1.20

Wing				Control				Test conditions					Data		Reference	
Λ	A	λ	t/c	$\frac{c_f}{c}$	$\frac{b_f}{b/2}$	Loc.	Bal.	R_{max}	M	α	δ	Facility	Effn.	HM	Report	Bibl. number
68LE 15TE	1.9	0.00	0.04	S_f/S: 0.21	0.85	Outb		30.0	0.90-1.80	0	2.7	L-P.A.R.D.	X		RM L53J02	332

TRAILING-EDGE FLAP CONTROLS

TRIANGULAR WINGS ($\Lambda_{LE} \neq 45$, 60, or 63)

M = 1.20 to ----

Wing				Control				Test conditions					Data		Reference	
Λ	A	λ	t/c	$\frac{c_f}{c}$	$\frac{b_f}{b/2}$	Loc.	Bal.	R_{max}	M	α	δ	Facility	Effn.	HM	Report	Bibl. number
50Δ mod	2.6	0.16	F.P. 0.05r	$\Delta/2$	0.17	Tip		0.8	1.50	-2 to 6	0, 10, 15	A-1-by 3-ft S.T.	X		RM A50H10	192
70Δ mod	1.4	0.06	F.P. 0.01r	$\Delta/2$	0.23	Tip		3.8	1.60	0 to 15	-10 to 10	L-4-ft S.T.	X	X	RM L52E15	267
55Δ	3.5	0.00	0.05	0.30	0.60	Outb	Horn	2.0	1.40-2.00	-20 to 20	0 to 20	L-9-by 12-in S.B.D.T.	X	X	RM L52L15	292
68LE 15TE	1.9	0.00	0.04	S_f/S: 0.21	0.80	Outb	Thick T.E.	30.0	0.90-1.80	0	2.7	L-P.A.R.D.	X		RM L53J02	332
70Δ mod	1.4	0.06	F.P. 0.01r	$\Delta/2$	0.23	Tip		3.5	2.01	0 to 27	0, ±10	L-4-ft S.T.	X		RM L53K03	337

LEADING-EDGE FLAP CONTROLS

TWO-DIMENSIONAL WINGS

Airfoil	Control	Test conditions					Data		Reference	
	c_f/c;	R_{max}	M	α	δ	Facility	Effn.	HM	Report	Bibl. number
Circular arc t/c = 0.10	0.15	---	0.14	-8 to 16	0 to 50	L-L.T.P.T.	X		RM L6K22	13
Circular arc t/c = 0.06	0.15	2.1	0.15	-2 to 12	0 to 27	L-L.T.P.T.	X P.D.	X	RM L7H04	48
NACA 65A006	0.15	18.0	0.10	-12 to 12	0 to 28	L-L.T.P.T.	X		RM L7K06	55
NACA 64A006	0.15	1.7	0.50-1.00	0 to 10	-15 to 0	L-4-by 19-in T.	X P.D.		RM L53G23	318

LEADING-EDGE FLAP CONTROLS

THREE-DIMENSIONAL WINGS

Wing				Control				Test conditions					Data		Reference	
Λ	A	λ	t/c	$\frac{c_f}{c}$	$\frac{b_f}{b/2}$	Loc.	Bal.	R_{max}	M	α	δ	Facility	Effn.	HM	Report	Bibl. number
26	1.1	0.31	F.P. 0.03r	S_f/S: 0.16	0.72	Outb		3.0	1.9	-4 to 4	0 to 8	L-9-by 12-in S.B.D.T.	X	X	RM L8K17a	109
20 0	1.8 1.8	0.20 1.00	0.05 0.05	S_f/S: 0.13	0.89	Outb		12.0	0.70-1.80	0	5	L-P.A.R.D.	X		RM L8E10	90
7	2.7	0.50	0.08	0.25	1.00	----		1.3	0.50-1.30	-3 to 12	-20 to 20	A-1-by 3.5-ft H.S.T.	X	X	RM A50K10	202
7	2.7	0.50	0.08	0.25	1.00	----		1.3	0.50-1.30	-3 to 12	-20 to 5	A-1-by 3.5-ft H.S.T.	X	X	RM A50K27b	203
5	3.1	0.59	----	S_f/S: 0.23	1.00	----		1.3	1.90	-3 to 10	-5 to 5	L-9-in S.T.		X	RM L8K12a	108
5	4.0	0.50	0.045	S_f/S: 0.15	1.00	----		3.0	0.30	-6 to 20	0 to 60	A-12-ft P.T.	X		RM A8F15	94
5	4.0	0.50	0.042	S_f/S: 0.15	1.00	----		2.0	0.20-0.94	-6 to 19	0 to 20	A-12-ft P.T.	X		RM A8K19	110

SPOILER CONTROLS
TWO-DIMENSIONAL WINGS
M = ---- to 0.50

Airfoil	Control	Test conditions					Data		Reference	
	Type location	R_{max}	M	α	h/c	Facility	Effn.	HM	Report	Bibl. number
NACA 7-series t/c = 0.18, 0.15	Slot-lip 0.72c	6.0	0.13	-12 to 14	δ = 0 to -20	L-L.T.P.T.		X	RM L9B23	121

SPOILER CONTROLS
TWO-DIMENSIONAL WINGS
M = 0.50 to 0.95

Airfoil	Control	Test conditions					Data		Reference	
	Type, location	R_{max}	M	α	h/c	Facility	Effn.	HM	Report	Bibl. number
No reports available										

SPOILER CONTROLS
TWO-DIMENSIONAL WINGS
M = 0.95 to 1.20

Airfoil	Control	Test conditions					Data		Reference	
	Type, location	R_{max}	M	α	h/c	Facility	Effn.	BM	Report	Bibl. number
No reports available										

SPOILER CONTROLS
TWO-DIMENSIONAL WINGS
M = 1.20 to ----

Airfoil	Control	Test conditions					Data		Reference	
	Type, location	R_{max}	M	α	h/c	Facility	Effn.	HM	Report	Bibl. number
Double wedge (mod) t/c = 0.06	Plain; var.	1.0	1.93	0, ±5, ±10	0.03 to .07	L-9-in S.T.	P.D.		RM L52L31	295

SPOILER CONTROLS

UNSWEPT WINGS (Λ = 0 to 16)

M = ---- to 0.50

Wing				Control			Test condition					Data		Reference	
A	A	λ	t/c	Type	$\frac{b_f}{b/2}$	Loc.	R_{max}	M	α	h/c	Facility	Effn.	HM	Report	Bibl. number
0	Var	1.00	0.10	Plain, step retract.	0.60	0.70c outb	2.0	0.26	-6 to 25	0 to 0.08	L-7-by 10-ft 300 mph T.	X		Rep 1081	250
5	2.5	0.63	0.06	Plain	0.40 0.75	0.70c outb	7.6	0.15	0 to 24	0.06	L-19-ft P.T.	X	X	RM L52B15	257
16	3.0	0.40	0.06	Plain	Var	0.70c Var	9.7	0.13	-2 to 18	0.05, 0.10, 0.15	A-40-by 80-ft T.	X		RM A54H26	375
0	5.8	0.57	0.15	Plug	0.45	0.70c outb	2.0	0.10	-10 to 20	δ = 0, 40, 50	L-7-by 10-ft 300 mph	X	X	TN 1079	8
0	5.8	0.57	0.15	Plug	0.54	0.70c outb	3.7	0.19	-8 to stall	0 to 0.11	L-7-by 10-ft 300 mph	X		TN 1872	116
P61 airplane				Circular arc	0.30	0.65c mid	---	----		0 to 0.08	Flight	X	X	TN 1015	1
OS2U-2, P61 airplanes				Plug; circular arc	0.30	----- -----	---	0.10-0.26	-----	----------	A-flight	X	X	TN 1123	19
0	6.0	0.50	0.16r 0.09t	Plain, perforated	Var	0.70c outb	7.4	0.25	0 to stall	Var	L-10-ft P.T.	X		TN 1298	27
0	10.4	0.45	0.20 0.10	Plain	Var	0.70c var	2.7	0.27	-6 to stall	0.05	L-7-by 10-ft 300 mph	X		TN 1294	25
12	11.1	0.25	----	Perforated	0.37	0.65c outb	9.0	0.18	-4 to stall	0 to 0.097	L-19-ft P.T.	X	X	TN 1409	32
12	11.1	0.25	----	Perforated	0.32	0.53c outb	9.0	0.18	3 to 14	0.10	L-19-ft P.T.	X	X	TN 1441	35

SPOILER CONTROLS

UNSWEPT WINGS (Λ = 0 to 16)

M = 0.50 to 0.95

Wing				Control			Test condition					Data		Reference	
Λ	A	λ	t/c	Type	$\frac{b_r}{b/2}$	Loc.	R_{max}	M	α	h/c	Facility	Effn.	RM	Report	Bibl. number
0	5.8	0.57	0.10	Plug	0.54	0.70c outb	10.0	0.13-0.70	-2 to 11	0.02 to 0.08	L-7-by 10-ft H.S.T.	X	X	TN 1663	71
0	5.8	0.57	0.10	Plug	0.54	0.70c outb	10.0	0.13-0.60	0 to 15	-0.01 to 0.07	L-7-by 10-ft H.S.T.	X	X	TN 1802	115
0	5.8	0.57	0.15 0.10	Plug; plain	0.49	0.70c outb	12.0	0.13-0.71	----	--------	L-7-by 10-ft H.S.T.			Rep 1054	159
0	9.0	0.40	0.10	Plain w. flap-aileron	0.37	Var outb	1.4	0.40-0.92	-2 to 7	0.03, 0.06	L-8-ft H.S.T.	X P.D.	X	RM L7D21	42

SPOILER CONTROLS

UNSWEPT WINGS (A = 0 to 16)

M = 0.95 to 1.20

Wing				Control			Test condition					Data		Reference	
A	A	λ	t/c	Type	$\frac{b_r}{b/2}$	Loc.	R_{max}	M	α	h/c	Facility	Effn.	HM	Report	Bibl. number
16	3.0	0.40	0.04	Plain; with gap	0.30	1.00c outb	6.0	0.50-1.60	0	0.02	L-P.A.R.D.	X		RM L54D26a	360
0	3.7	1.00	0.09	Plain	0.81	0.80c outb	7.0	0.60-1.70	0	0.02	L-P.A.R.D.	X		RM L8A07	77
0	3.7	1.00	0.09	Plain	0.81	Var outb	7.0	0.60-1.70	0	0.02	L-P.A.R.D.	X		RM L8I23	102
0	3.7	1.00	0.03 0.06	Plain	0.80	0.80c outb	7.0	0.40-1.70	0	0.001 to 0.05	L-P.A.R.D.	X		RM L52H18	279
0	4.0	0.60	0.06	S.S.D.	0.57	0.55c outb	0.7	0.60-1.12	-4 to 24	0 to -0.10	L-7-by 10-ft H.S.T.-s.w.	X		RM L53J21	336

SPOILER CONTROLS

UNSWEPT WINGS (Λ = 0 to 16)

M = 1.20 to ----

Wing				Control			Test condition					Data		Reference	
Λ	A	λ	t/c	Type	$\frac{b_f}{b/2}$	Loc.	R_{max}	M	α	h/c	Facility	Effn.	HM	Report	Bibl. number
5	2.5	0.63	0.10	Plain	Var	Var	2.2	1.90	-4 to 8	0 to 0.05	L-9-by 12-in S.B.D.T.	X P.D.		RM L50L20	206
0	2.7	1.00	0.06	Plain	0.84	1.00c outb	2.0	1.96	-6 to 8	0 to 0.06	L-9-by 12-in S.B.D.T.	X		RM L52J28	265
16	3.0	0.40	0.04	Plain	0.30	1.00c outb	6.0	0.60-1.60	0	0.02	L-P.A.R.D.	X		RM L54D26a	360
0	3.7	1.00	0.09	Plain	0.80	0.80c outb	7.0	0.60-1.70	0	0.02	L-P.A.R.D.	X		RM L8A07	77
0	3.7	1.00	0.09	Plain	0.81	Var outb	7.0	0.60-1.70	0	0.02	L-P.A.R.D.	X		RM L8I23	102
0	3.7	1.00	0.03 0.06	Plain	1.00	0.80c -----	7.0	0.40-1.70	0	0.005 to 0.050	L-P.A.R.D.	X		RM L52H18	279

SPOILER CONTROLS

SWEPT WINGS (Λ = 17 to --)

M = ---- to 0.50

Wing				Control			Test condition					Data		Reference	
Λ	A	λ	t/c	Type	$\frac{b_f}{b/2}$	Loc.	R_{max}	M	α	h/c	Facility	Effn.	BM	Report	Bibl. number
20 60	5.8 1.9	X-5 model		Plain	0.48	0.70c var	2.0	0.15	-4 to 24	0.09, 0.12	L-7-by 10-ft 300 mph T.	X		RM L50C17a	173
45	2.1	1.00	0.07	Plain; step	0.60	0.70c var	4.4	0.26	-6 to 25	0.005 to 0.080	L-7-by 10-ft 300 mph T.	X		Rep 1091	250
38	3.0	0.50	----	Step plug	0.60	0.70c outb	---	----	0 to 16	to 0.06	L-F.F.T.	X		TN 2089	161
38	3.0	0.50	----	Step plug	0.60	0.70c outb	---	----	0 to 16	to 0.06	L-F.F.T.	X		TN 2247	165
41	3.0	0.40	0.06	Plain	Var	0.70c var	9.7	0.13	-2 to 20	0.05, 0.10, 0.15	A-40-by 80-ft T.	X		RM A54H26	375
48	3.1	0.50	0.12	Plain; step	Var	0.70c var	1.3	0.13	-6 to 28	0.05	L-7-by 10-ft 300 mph T.	X		RM L9K02	149
48	3.1	0.49	0.08	Plain	0.16 0.20	0.65c mid	4.5	0.33	0 to 29	0.01	L-7-by 10-ft 300 mph T.		X	RM L52G03	272
48	3.4	0.44	0.08	Step plug	0.60	0.70c mid	2.2	0.12	-10 to 27	0.05	L-7-by 10-ft 300 mph T.	X	X	RM L8H20	99
45	3.4	0.51	0.08	Plain; flap; perforated	Var	0.70c outb	4.4	0.07	-2 to 20	0.02 to 0.10	L-F.S.T.	X		RM L50J20	198
40	3.9	0.63	0.09	Step plug	0.77	0.70c outb	6.0	0.15	-4 to 20	0.05, 0.10	L-19-ft P.T.	X	X	RM L9A07	117
40	4.0	0.63	0.09	Plain	0.48	0.70c outb	9.5	0.25	-4 to 18	0.05	L-19-ft P.T.	X		RM L7D14	41
40	4.0	0.63	0.09	Plain	Var	Var	3.8	0.18	-10 to 24	-0.10 to 0	L-7-by 10-ft 300 mph T.	X		TN 1646	68
40	4.0	0.60	0.09	Plug	0.50	0.70c mid	2.4	0.12	-10 to 26	0.005 to 0.07	L-7-by 10-ft 300 mph T.	X		RM L8K19	111
40	4.0	0.27	0.07	Plain	Var	Var	6.8	0.16	0 to 16	0.02 to 0.10	L-19-ft P.T.	X		RM L9L20a	157
45	4.0	0.60	0.06	S.S.D.	0.40	0.52c mid	2.7	0.28	-12 to 60	0.05	L-7-by 10-ft 300 mph T.	X	X	RM L52G10	274
35	4.0	0.50	0.10	S.S.D.	0.52 0.50	Var mid	---	----	------	----	L-spin T.			RM L54I14	377
45	4.5	0.50	0.10	Plain	0.50	Var	1.9	----	-4 to 28	Var	A-7-by 10-ft T.	X		RM A7L16	61

SPOILER CONTROLS

SWEPT WINGS (Λ = 17 to --)

M = ---- to 0.50 (Concluded)

Wing				Control			Test condition					Data		Reference	
Λ	A	λ	t/c	Type	$\frac{b_f}{b/2}$	Loc.	R_{max}	M	α	h/c	Facility	Effn.	HM	Report	Bibl. number
35	4.8	0.51	0.09	Jet; plain	0.24	0.70c outb	3.5	0.27	0 to 20	0.015 to 0.08	L-7-by 10-ft 300 mph T.	X		RM L53I09a	324
35	4.8	0.51	0.08	Plain	Var	0.70c var	12.8	0.13	-2 to 16	0.05 to 0.15	A-40-by 80-ft T.	X		RM L54H26	375
-35	5.6	0.39	0.07	Plain; step	Var	0.60c var	5.0	0.16	0 to 25	0.01 to 0.10	L-19-ft P.T.	X	X	RM L9H18	143
35	8.0	0.50	0.10	Plain; step	0.47	Var outb	6.8	0.13	-4 to 20	0.01 to 0.10	L-19-ft P.T.	X	X	RM L8K12	107
45	6.0	0.60	0.09	Plain	Var	0.70c var	1.0	----	-12 to 20	0.10	L-7-by 10-ft 300 mph T.	X		RM L54C19	355

SPOILER CONTROLS

SWEPT WINGS (Λ = 17 to --)

M = 0.50 to 0.95

Wing				Control			Test condition					Data		Reference	
Λ	A	λ	t/c	Type	$\frac{b_f}{b/2}$	Loc.	R_{max}	M	α	h/c	Facility	Effn.	HM	Report	Bibl. number
35	3.0	0.60	0.10	Plain	0.20	0.35c inb	5.0	0.40-0.97	-2 to 8	0.05	L-7-by 10-ft H.S.T.-s.w.	X		RM L9C31	125
41	3.0	0.40	0.03	Plain-perforated	0.25	0.70c mid	6.0	0.25-0.96	0 to 26	0.06	A-12-ft P.T.	X		RM A52G02	271
49	3.1	0.50	0.08	Step	0.60	0.70c mid	9.0	0.50-0.91	-4 to 4	0 to 0.07	L-7-by 10-ft H.S.T.	X	X	RM L9D06	127
33	4.0	0.60	0.06	Plain	0.50	0.70c inb	3.5	0.40-0.91	0 to 24	0.05 to 0.25	L-7-by 10-ft H.S.T.	X		RM L51L10	247
35	4.0	0.60	0.06	Plain; plug; finger	0.86	---- outb	4.0	0.60-0.93	0 to 20	0 to 0.04	L-7-by 10-ft H.S.T.	P.D.		RM L52C28	260
33	4.0	0.60	0.06	S.S.D.	0.50	0.80c inb	3.5	0.40-0.91	0 to 20	-0.125 to 0	L-7-by 10-ft H.S.T.	X		RM L53D17	307
33	4.0	0.60	0.06	Plain	0.50	0.70c inb	3.5	0.40-0.89	0 to 8	0.025 to 0.10	L-7-by 10-ft H.S.T.	X		RM L53J05a	334
35	4.0	0.60	0.06	Semaphore; plug	Var	0.70c var	4.0	0.60-0.93	0 to 20	0 to 0.04	L-7-by 10-ft H.S.T.	P.D.		RM L54F08	362
45	4.0	0.30	0.06	Plain; S.S.D.	0.44	0.55c var	3.2	0.40-0.94	-2 to 10	0 to 0.10	L-7-by 10-ft H.S.T.	X		RM L54I09	376
45	5.5	0.53	0.07	Plain, rotatable	0.25	0.60c outb	5.0	0.25-0.94	-1 to 20	0.01 to 0.10	A-16-ft H.S.T.	X	X	RM A53I21	327

SPOILER CONTROLS

SWEPT WINGS (Λ = 17 to --)

M = 0.95 to 1.20

Wing				Control			Test condition					Data		Reference	
Λ	A	λ	t/c	Type	$\frac{b_f}{b/2}$	Loc.	R_{max}	M	α	h/c	Facility	Effn.	HM	Report	Bibl. number
60	2.0	0.60	0.06	Plain	Var	0.70c var	1.0	0.60-1.20	0 to 8	0.05	L-7-by 10-ft H.S.T.-b.	X		RM L50E09	180
60	2.0	0.60	0.06	Plug; plain	0.60	0.70c mid	1.0	0.60-1.20	-2 to 18	-0.06 to 0.05	L-7-by 10-ft H.S.T.-b.	X		RM L52F16	270
45	3.0	0.50	0.09	Plain; slotted	0.22	0.69c mid	9.0	0.60-1.50	0	0.06	L-P.A.R.D.	X		RM L51I28	240
55	3.0	1.00	0.07	Flap-servovane	1.00	0.75c -----	1.1	0.60-1.15	-20 to 20	δ = 0 to 12	L-7-by 10-ft H.S.T.-b.	X		RM L51J10	241
46	3.0	0.50	0.07	Plug	0.25	0.54c inb	1.0	0.70-1.10	0 to 16	-0.06 to 0.04	L-7-by 10-ft H.S.T.-s.w.	X	X	RM L52A05	251
46	3.0	0.50	0.08	Plug	0.25	0.54c inb	1.0	0.70-1.10	0 to 16	-0.04 to 0.04	L-7-by 10-ft H.S.T.-s.w.	X	X	RM L52D25	265
45	3.6	0.30	0.07	Semaphore	0.40	Var mid	6.0	0.60-1.30	0	0 to 0.07	L-P.A.R.D.	X		RM L55K20	340
45	4.0	1.00	0.07	Plain	Var	1.00c var	0.7	0.65-1.05	0 to 3	0.01	L-wing flow	X		RM L6K12a	11
40	4.0	0.63	-----	Step	0.61	0.70c mid	1.0	0.50-1.20	3	0.05	L-7-by 10-ft H.S.T.-b.	X		RM L7F19	44
40	4.0	0.50	0.07	Plain	0.40	----- outb	1.2	0.60-1.10	0	0.05, 0.10	L-7-by 10-ft H.S.T.-b.	X		RM L8D21	88
45	4.0	0.60	0.06	Plain	Var	0.60c var	8.0	0.60-1.60	0	0.02 to 0.05	L-P.A.R.D.	X		RM L52H06a	276
45	4.0	0.60	0.06	Plain	0.73	0.70c inb	6.0	0.60-1.03	-2 to 20	0.04	L-16-ft T.T.	X		RM L53G07a	316
45	4.0	0.60	0.06	Plain	Var	0.70c var	0.9	0.70-1.05	-5 to 10	0.10	L-7-by 10-ft H.S.T.-s.w.	X	X	RM L53K03a	338
45	4.0	0.60	0.06	Plain	0.50	0.70c var	8.0	0.60-1.40	0	0.02	L-P.A.R.D.	X		RM L53L14a	343
45	4.0	0.60	0.06	Plain	0.73	0.70c inb	6.0	0.60-1.03	0 to 16	0.04	L-16-ft T.T.	P.D.		RM L54C17a	354
45	4.0	0.60	0.06	Plain	Var	Var inb	1.6	0.86-0.99	-4 to 14	0.05, 0.08	L-9-by 12-in S.B.D.T.	X		RM L54D13	358

SPOILER CONTROLS

SWEPT WINGS (Λ = 17 to --)

M = 1.20 to ----

Wing				Control			Test condition					Data		Reference	
Λ	A	λ	t/c	Type	$\frac{b_f}{b/2}$	Loc.	R_{max}	M	α	h/c	Facility	Effn.	HM	Report	Bibl. number
48	2.5	0.62	0.08 0.07	Plain	0.50	0.65c outb	2.0	1.40-1.90	-8 to 10	0.02, 0.06	L-9-by 12-in S.B.D.T.	X		RM L50L06a	205
45	2.5	0.62	0.06	Plain; semaphore	Var	Var	2.2	1.40, 2.00	-10 to 14	0.06	L-9-by 12-in S.B.D.T.	X		RM L53B09	298
45	2.7	1.00	0.06	Plain	0.86	1.00c outb	2.0	2.00	-6 to 8	0 to 0.06	L-9-by 12-in S.B.D.T.	X		RM L52J28	283
45	3.0	0.50	0.07 0.09	Plain, slotted	0.22	0.69c mid	9.0	0.60-1.50	0	0.06	L-P.A.R.D.	X		RM L51I28	240
61	3.5	0.25	0.05	Plain	0.50	Var outb	1.5	1.20-1.70	0 to 10	Var	A-6-ft S.T.	X		RM A50A31a	169
61	3.5	0.25	0.05	Plain	0.50	Var outb	1.5	1.20-1.70	0 to 8	Var	A-6-ft S.T.	X		RM A50K07	201
45	4.0	0.60	0.06	Plain	Var	0.70c var	8.0	0.60-1.60	0	0.02 to 0.05	L-P.A.R.D.	X		RM L52H06a	276
45	4.0	0.60	0.06	Plain	0.50	Var var	8.0	0.60-1.40	0	0.02	L-P.A.R.D.	X		RM L53L14a	343
40	4.0	0.50	0.08	Plain; step; flap	Var	Var var	2.5	1.60	-8 to 16	0.02, 0.05	L-4-ft S.P.T.	X	X	RM L54F15	363

SPOILER CONTROLS

TRIANGULAR WINGS

M = ---- to 0.50

Wing				Control			Test condition					Data		Reference	
Λ	A	λ	t/c	Type	$\frac{b_f}{b/2}$	Loc.	R_{max}	M	α	h/c	Facility	Effn.	HM	Report	Bibl. number
60Δ	2.3	0.00	F.P. 0.02r	Slotted; perforated	Var	Var var	3.0	0.19	-4 to 38	-0.07	L-7-by 10-ft 300 mph T.	X		RM L52J13	281
60Δ	2.3	0.00	F.P. 0.02r	Flap	Var	Var var	2.1	0.13	-10 to 32	0.01 to 0.09	L-7-by 10-ft 300 mph T.	X		RM L52J24	282
60Δ	2.3	0.00	F.P. 0.02r	Auto-rotat vane	---	$0.80c_r$ 0.40b/2	3.0	0.20	-4 to 20	-------	L-7-by 10-ft 300 mph T.	X		RM L53K27	341
45Δ	4.0	0.00	0.06	Plain	Var	0.70c var	7.2	0.13	-2 to 20	0.05 to 0.15	A-40-by 80-ft T.	X		RM A54H26	375

SPOILER CONTROLS

TRIANGULAR WINGS

M = 0.50 to 0.95

Wing				Control			Test condition					Data		Reference	
A	A	λ	t/c	Type	$\frac{b_f}{b/2}$	Loc.	R_{max}	M	α	h/c	Facility	Effn.	HM	Report	Bibl. number
60Δ	2.3	0.00	----	Auto-rotat vane	---	---	---	0.50-1.60	0, 7	--------	L-P.A.H.D.	X		RM L53I21a	329
60Δ	2.3	0.00	0.03	Plain	Var	Var var	5.5	0.60-0.94	-2 to 24	-0.01 to -0.10	L-7-by 10-ft H.S.T.	X		RM L54D01	357

SPOILER CONTROLS

TRIANGULAR WINGS

M = 0.95 to 1.20

Wing				Control			Test condition					Data		Reference	
Λ	A	λ	t/c	Type	$\frac{b_r}{b/2}$	Loc.	R_{max}	M	α	h/c	Facility	Effn.	HM	Report	Bibl. number
60Δ	2.3	0.00	-----	Auto-rotat vane	----	------	---	0.50-1.60	0, 7	--------	L-P.A.R.D.	X		RM L53I21a	329
60Δ	2.3	0.00	0.045	Slotted-flap	0.56	$0.80c_r$ mid	1.9	0.70-1.10	-4 to 36	-0.07 to 0	L-7-by 10-ft H.S.T.-s.w.	X	X	RM L53J05	333
60Δ	2.3	0.00	F.P. 0.02r	Auto-rotat vane	----	$0.80c_r$ 0.40b/2	0.7	0.60-1.10	-4 to 20	--------	L-7-by 10-ft H.S.T.-b.	X		RM L53K27	341

SPOILER CONTROLS

TRIANGULAR WINGS

M = 1.20 to ----

Wing				Control			Test condition					Data		Reference	
Λ	A	λ	t/c	Type	$\frac{b_r}{b/2}$	Loc.	R_{max}	M	α	h/c	Facility	Effn.	HM	Report	Bibl. number
60Δ	2.3	0.00	----	Auto-rotat vane	----	---	---	0.50-1.60	0, 7	----	L-P.A.R.D.	X		RM L53I21a	329
60Δ	2.3	0.00	0.03	Plain	0.55	--- inb	4.0	1.60	0, 6, 12	0.03	L-4-ft S.P.T.	X P.D.		RM L53L17	344

SUMMARY REPORTS

Study	Control	Speed range	Data		Reference	
			Effn.	HM	Report	Bibl. number
Effect of wing aspect ratio and sweep on static stability and control	Flap; spoiler	Subsonic	X		TN 1046	2
Data analysis: effect of tab balance; two-dimensional, unswept wings	Flap	Subsonic		X	TN 1049	4
Effect of wing sweep on stability and control	Flap; spoiler	Subsonic	X		TN 1088	8
Summary of lateral control research (1947)	----------	--------	X	X	Rep. 868	16
Summary of two-dimensional control data	Flap	Subsonic		X	TN 1113	18
Summary of tunnel data on control hinge moment; unswept, swept wings	Flap	Subsonic	X	X	RM A7L02	59
Data on lateral controls with full-span flaps; unswept wings	Flap, spoiler	Subsonic	X	X	TN 1404	62
Analysis of data and estimation of flap effectiveness for swept wings	Flap	Subsonic	X		TN 1674	72
Effects of wing sweep on controls	Flap; balanced	Subsonic, transonic	X	X	RM L8A28c	81
End-plate effects on swept wings	Flap, spoiler	Subsonic	X		TN 2229	164
Characteristics of flap and Δ-tip controls; unswept, swept, triangular wings	Flap, Δ-tip	Transonic, supersonic	X	X	RM L51C22	216
Summary of data: 9 planforms; unswept, swept	Flap	Subsonic	X	X	RM A51G31a	227
Aerodynamic twisting moment for various unswept, swept wings	Flap, spoiler	Transonic, supersonic			RM L51K20	244
Summary of recent (1952) control data; unswept, swept, triangular wings	Flap, spoiler	Transonic, supersonic	X	X	RM L52A10	252
Characteristics of all-moving wings; unswept, triangular	All-moving wing	Supersonic	X	X	RM A52D29	285
Load distribution over various wings; two-dimensional, unswept, triangular	Flap, spoiler	Supersonic			RM L53D15a	306
Load due to controls on swept wings	Flap, spoiler	Subsonic, transonic			RM L53D29a	309

SUMMARY REPORTS - Concluded

Study	Control	Speed range	Data		Reference	
			Effn.	HM	Report	Bibl. number
Aeroelastic effects on swept wings	Flap	Subsonic, supersonic	X		RM L53H14	321
Recent (1953) data on controls; two-dimensional, unswept, triangular wings	Flap, tip	Transonic, supersonic	X	X	RM L53I17a	325
Recent (1953) data on spoilers; unswept, swept, triangular wings	Spoiler	Subsonic, transonic, supersonic	X	X	RM L53I24a	330
Control motion, rate, response: F86A, F84H, F2H-2, F94B airplanes	--------	----------			RM L53L28	346

BIBLIOGRAPHY

1. Ashkenas, I. L.: The Development of a Lateral-Control System for Use With Large-Span Flaps. NACA TN 1015, 1946.

2. Letko, William and Goodman, Alex: Preliminary Wind-Tunnel Investigation at Low Speed of Stability and Control Characteristics of Swept-Back Wings. NACA TN 1046, 1946.

3. Braslow, Albert L.: Two-Dimensional Wind-Tunnel Investigation of Low-Drag Vertical-Tail, Horizontal-Tail, and Wing Sections Equipped with Sealed Internally Balanced Control Surfaces. NACA TN 1048, 1946.

4. Crandall, Stewart M., and Murray, Harry E.: Analysis of Available Data on the Effects of Tabs on Control-Surface Hinge Moments. NACA TN 1049, 1946.

5. Schueller, Carl F., Korycinski, Peter F., and Strass, H. Kurt: Tests of a Full-Scale Horizontal Tail Surface in the Langley 16-Foot High-Speed Tunnel. NACA TN 1074, 1946.

6. Lowry, John G., and Turner, Thomas R.: Pressure Distribution over a Plug-Type Spoiler-Slot Aileron on a Tapered Wing with Full-Span Slotted Flaps. NACA TN 1079, 1946.

7. Goranson, R. Fabian: Flight Tests of Experimental Beveled-Trailing-Edge Frise Ailerons on a Fighter Airplane. NACA TN 1085, 1946.

8. Soule, Hartley A.: Influence of Large Amounts of Wing Sweep on Stability and Control Problems of Aircraft. NACA TN 1088, 1946.

9. Braslow, Albert L.: Two-Dimensional Wind-Tunnel Investigation of Sealed 0.22-Airfoil-Chord Internally Balanced Ailerons of Different Contour on an NACA 65 (112) - 213 Airfoil. NACA TN 1099, 1946.

10. Luoma, Arvo A.: An Investigation of a High-Aspect-Ratio Wing Having 0.20-Chord Plain Ailerons in the Langley 8-Foot High-Speed Tunnel. NACA RM L6H28d, 1946.

11. Silsby, Norman S. and Daum, Fred L.: The Effectiveness of a Trailing-Edge Spoiler on a Swept-Back Airfoil at Transonic Speeds from Tests by the NACA Wing-Flow Method. NACA RM L6K12a, 1947.

12. McCormack, Gerald M. and Stevens, Victor I., Jr.: An Investigation of the Low-Speed Stability and Control Characteristics of Swept-Forward and Swept-Back Wings in the Ames 40- by 80-Foot Wind Tunnel. NACA RM A6K15, 1947.

3625

13. Underwood, William J. and Nuber, Robert J.: Two-Dimensional Wind-Tunnel Investigation at High Reynolds Numbers of Two Symmetrical Circular-Arc Airfoil Sections with High-Lift Devices. NACA RM L6K22, 1947.

14. Luoma, Arvo A. and Liccini, Luke L.: An Investigation of the Hinge-Moment Fluctuations of 0.20-Chord Plain Ailerons on a High-Aspect-Ratio Wing in the Langley 8-Foot High-Speed Tunnel. NACA RM L6L10a, 1947.

3625

15. Bielat, Ralph P.: Investigation at High Speeds of a Horizontal-Tail Model in the Langley 8-Foot High-Speed Tunnel. NACA RM L6L10b, 1947.

16. Toll, Thomas A.: Summary of Lateral-Control Research. NACA Report 868, 1947.

17. Sawyer, Richard H.: Flight Measurements of the Lateral Control Characteristics of Narrow-Chord Ailerons on the Trailing Edge of a Full-Span Slotted Flap. NACA Report 883, 1947.

18. Purser, Paul E and Cook, Charles B.: Collection and Analysis of Hinge-Moment Data on Control Surface Tabs. NACA TN 1113, 1947.

19. Spahr, J. Richard: Lateral-Control Characteristics of Various Spoiler Arrangements as Measured in Flight. NACA TN 1123, 1947.

20. Braslow, Albert L.: Two-Dimensional Wind-Tunnel Investigation of a 10.7-Percent-Thick Symmetrical Tail Section With a 0.40 Airfoil-Chord Control Surface and a 0.20 Control-Surface-Chord Tab. NACA TN 1228, 1947.

21. Hoggard, H. Page, Jr. and McKinney, Elizabeth G.: Wind-Tunnel Investigation of Control-Surface Characteristics of Plain and Balanced Flaps with Several Trailing-Edge Angles on an NACA 0009 Tapered Semispan Wing. NACA TN 1248, 1947.

22. Bennett, Charles V. and Johnson, Joseph L.: Experimental Determination of the Damping in Roll and Aileron Rolling Effectiveness of Three Wings Having 2°, 42°, and 62° Sweepback. NACA TN 1278, 1947.

23. Maggin, Bernard, and Bennett, Charles V.: Flight Tests of an Airplane Model with a 42° Sweptback Wing in the Langley Free-Flight Tunnel. NACA TN 1287, 1947.

24. Maggin, Bernard, and Bennett, Charles V.: Flight Tests of an Airplane Model With a 62° Sweptback Wing in the Langley Free-Flight Tunnel. NACA TN 1288, 1947.

25. Fischel, Jack and Tamburello, Vito: Investigation of Effect of Span, Spanwise Location, and Chordwise Location of Spoilers on Lateral Control Characteristics of a Tapered Wing. NACA TN 1294, 1947.

26. Toll, Thomas A., Queijo, M. J., and Brewer, Jack D.: Wind-Tunnel Investigation of the Effects of Surface-Covering Distortion on the Characteristics of a Flap Having Undistorted Contour Maintained for Various Distances Ahead of the Trailing Edge. NACA TN 1296, 1947.

27. Fitzpatrick, James E., and Furlong, G. Chester: Effect of Spoiler-Type Lateral-Control Devices on the Twisting Moments of NACA 230-Series Airfoil Sections. NACA TN 1298, 1947.

28. Murray, Harry E., and Wells, Evalyn G.: Wind-Tunnel Investigation of the Effect of Wing-Tip Fuel Tanks on Characteristics of Unswept Wings in Steady Roll. NACA TN 1317, 1947.

29. Holtzclaw, Ralph W. and Dods, Jules B., Jr.: Wind-Tunnel Investigation of Drooped Ailerons on a 16-Percent-Thick Low-Drag Airfoil. NACA TN 1386, 1947.

30. Brewer, Jack D. and Queijo, M. J.: Wind-Tunnel Investigation of the Effect of Tab Balance on Tab and Control-Surface Characteristics. NACA TN 1403, 1947.

31. Stevenson, David B., and Byrne, Robert W.: High-Speed Wind-Tunnel Tests of an NACA 16-009 Airfoil Having a 32.9-Percent-Chord Flap With an Overhang 20.7 Percent of the Flap Chord. NACA TN 1406, 1947.

32. Deters, Owen J. and Russell, Robert T.: Investigation of a Spoiler-Type Lateral Control System on a Wing with Full-Span Flaps in the Langley 19-Foot Pressure Tunnel. NACA TN 1409, 1947.

33. Stevenson, David B., and Adler, Alfred A.: High-Speed Wind-Tunnel Tests of an NACA 0009-64 Airfoil Having a 33.4-Percent-Chord Flap With an Overhang 20.1 Percent of the Flap Chord. NACA TN 1417, 1947.

34. Deters, Owen J. and Russell, Robert T.: Investigation of the Aileron and Tab of a Spring-Tab Lateral-Control System in the Langley 19-Foot Pressure Tunnel. NACA TN 1431, 1947.

35. Deters, Owen J.: Comparison of the Control-Force Characteristics of Two Types of Lateral-Control System for Large Airplanes. NACA TN 1441, 1947.

3625

36. Fischel, Jack and Schneiter, Leslie E.: High-Speed Wind-Tunnel Investigation of High Lift and Aileron-Control Characteristics of an NACA 65-210 Semi-Span Wing. NACA TN 1473, 1947.

37. Brown, Harvey H., Rathert, George A., Jr., and Clousing, Lawrence A.: Flight-Test Measurements of Aileron Control Surface Behavior at Supercritical Mach Numbers. NACA RM A7A15, 1947.

38. Adams, Richard E., and Silsby, Norman S.: Tests of a Horizontal-Tail Model through the Transonic Speed Range by the NACA Wing-Flow Method. NACA RM L7C25a, 1947.

39. Sandahl, Carl A. and Marino, Alfred A.: Free-Flight Investigation of Control Effectiveness of Full-Span 0.2-Chord Plain Ailerons at High Subsonic, Transonic, and Supersonic Speeds to Determine Some Effects of Section Thickness and Wing Sweepback. NACA RM L7D02, 1947.

40. Schueller, Carl F., Heiser, Gerald, and Cooper, Morton: Aerodynamic Force Characteristics at High Speeds of a Full-Scale Horizontal Tail Surface Tested in the Langley 16-Foot High-Speed Tunnel. NACA RM L7D08a, 1947.

41. Neely, Robert H. and Conner, D. William: Aerodynamic Characteristics of a 42° Swept-Back Wing with Aspect Ratio 4 and NACA 64_1-112 Airfoil Sections at Reynolds Numbers from 1,700,000 to 9,500,000. NACA RM L7D14, 1947.

42. Luoma, Arvo A.: An Investigation of the Lateral-Control Characteristics of Spoilers on a High-Aspect-Ratio Wing of NACA 65-210 Section in the Langley 8-Foot High-Speed Tunnel. NACA RM L7D21, 1947.

43. Johnson, Harold I.: Measurements of Aerodynamic Characteristics of a 35° Sweptback NACA 65-009 Ailfoil Model with 1/4-Chord Plain Flap by the NACA Wing-Flow Method. NACA RM L7F13, 1947.

44. Schneiter, Leslie E. and Ziff, Howard L.: Preliminary Investigation of Spoiler Lateral Control on a 42° Sweptback Wing at Transonic Speeds. NACA RM L7F19, 1947.

45. Sandahl, Carl A.: Free-Flight Investigation of Control Effectiveness of Full-Span, 0.2-Chord Plain Ailerons at High Subsonic, Transonic, and Supersonic Speeds to Determine Some Effects of Wing Sweepback, Taper, Aspect Ratio, and Section-Thickness Ratio. NACA RM L7F30, 1947.

46. Rathert, George A. Jr., and Cooper, George E.: Wing-Flow Tests of a Triangular Wing of Aspect Ratio Two. - I. Effectiveness of Several Types of Trailing-Edge Flaps on Flat-Plate Models. NACA RM A7G18, 1947.

47. Goodson, Kenneth W., and Comisarow, Paul: Lateral Stability and Control Characteristics of an Airplane Model Having a 42.8° Sweptback Circular-Arc Wing With Aspect Ratio 4.00, Taper Ratio 0.50, and Sweptback Tail Surfaces. NACA RM L7G31, 1947.

48. Underwood, William J. and Nuber, Robert J.: Aerodynamic Load Measurements over Leading-Edge and Trailing-Edge Plain Flaps on a 6-Percent Thick Symmetrical Circular-Arc Airfoil Section. NACA RM L7H04, 1947.

49. Ilk, Richard J.: Characteristics of a 15-Percent-Chord and a 35-Percent-Chord Plain Flap on the NACA 0006 Airfoil Section at High Subsonic Speeds. NACA RM A7H19, 1947.

50. Gardner, William N. and Curfman, Howard J., Jr.: Flight Investigation to Determine the Hinge Moments of a Beveled-Edge Aileron on a 45° Sweptback Wing at Transonic and Low Supersonic Speeds. NACA RM L7H26, 1947.

51. Cleary, Joseph W. and Krumm, Walter J.: High-Speed Aerodynamic Characteristics of Horn and Overhang Balances on a Full-Scale Elevator. NACA RM A7H29, 1948.

52. Luoma, Arvo A., Bielat, Ralph P. and Whitcomb, Richard T.: High-Speed Wind-Tunnel Investigation of the Lateral Control Characteristics of Plain Ailerons on a Wing with Various Amounts of Sweep. NACA RM L7I15, 1947.

53. Boddy, Lee E. and Morrill, Charles P., Jr.: The High-Speed Aerodynamic Effects of Modifications to the Wing and Wing-Fuselage Intersection of an Airplane Model with the Wing Swept Back 35°. NACA RM A7J02, 1948.

54. Scherrer, Richard and Wimbrow, William R.: Wind-Tunnel Investigation at a Mach Number of 1.53 of an Airplane with a Triangular Wing. NACA RM A7J05, 1948.

55. Nuber, Robert J. and Gottlieb, Stanley M.: Two-Dimensional Wind-Tunnel Investigation at High Reynolds Numbers of an NACA 65A006 Airfoil With High-Lift Devices. NACA RM L7K06, 1948.

56. Dods, Jules B., Jr.: Wind-Tunnel Investigation of Horizontal Tails. I - Unswept and 35° Swept-Back Plan Forms of Aspect Ratio 3. NACA RM A7K24, 1948.

3625

57. Morrill, Charles P., Jr. and Boddy, Lee E.: High-Speed Stability and Control Characteristics of a Fighter Airplane Model with a Swept-Back Wing and Tail. NACA RM A7K28, 1948.

58. Sandahl, Carl A., and Strass, H. Kurt: Additional Results in a Free-Flight Investigation of Control Effectiveness of Full-Span, 0.2-Chord Plain Ailerons at High Subsonic, Transonic, and Supersonic Speeds to Determine Some Effects of Wing Sweepback, Aspect Ratio, Taper, and Section Thickness Ratio. NACA RM L7L01, 1948.

59. Axelson, John A.: A Summary and Analysis of Wind-Tunnel Data on the Lift and Hinge-Moment Characteristics of Control Surfaces up to a Mach Number of 0.90. NACA RM A7L02, 1948.

60. Rose, Leonard M.: Low-Speed Investigation of a Small Triangular Wing of Aspect Ratio 2.0 II - Flaps. NACA RM A7L11, 1948.

61. Hopkins, Edward J.: A Wind-Tunnel Investigation at Low Speed of Various Lateral Controls on a 45° Swept-Back Wing. NACA RM A7L16, 1948.

62. Fischel, Jack, and Ivey, Margaret F.: Collection of Test Data for Lateral Control With Full-Span Flaps. NACA TN 1404, 1948.

63. Sjoberg, S. A. and Reeder, J. P.: Flight Measurements of the Lateral and Directional Stability and Control Characteristics of an Airplane Having a 35° Sweptback Wing with 40-Percent-Span Slots and a Comparison with Wind-Tunnel Data. NACA TN 1511, 1948.

64. Spearman, M. Leroy: Wind-Tunnel Investigation of an NACA 0009 Airfoil with 0.25- and 0.50- Airfoil-Chord Plain Flaps Tested Independently and in Combination. NACA TN 1517, 1948.

65. Brewer, Jack D., and Polhamus, Josephine F.: Wind-Tunnel Investigation of the Boundary Layer on an NACA 0009 Airfoil Having 0.25- and 0.50-Airfoil Chord Plain Sealed Flaps. NACA TN 1574, 1948.

66. Racisz, Stanley F., and Cahill, Jones F.: Wind-Tunnel Investigation of Effects of Forward Movements of Transition on Section Characteristics of a Low-Drag Airfoil With a 0.24-Chord Sealed Plain Aileron. NACA TN 1582, 1948.

67. Visconti, Fioravante: Investigation of an Approximately 0.178-Chord-Thick NACA 6-Series-Type Airfoil Section Equipped with Sealed Internally Balanced 0.20-Chord Ailerons and with a 0.05 Chord Tab. NACA TN 1590, 1948.

3625

CD-11

68. Schneiter, Leslie E. and Watson, James M.: Low-Speed Wind-Tunnel Investigation of Various Plain-Spoiler Configurations for Lateral Control on a 42° Sweptback Wing. NACA TN 1646, 1948.

69. Brewer, Gerald W. and May, Ralph W., Jr.: Investigation of a 1/7-Scale Powered Model of a Twin-Boom Airplane and a Comparison of its Stability, Control, and Performance with Those of a Similar All-Wing Airplane. NACA TN 1649, 1948.

70. McKinney, Marion O., Jr., and Shanks, Robert E.: Lateral Stability and Control Characteristics of a Free-Flying Model Having an Unswept Wing With an Aspect Ratio of 2. NACA TN 1658, 1948.

71. Fischel, Jack and Schneiter, Leslie E.: High-Speed Wind-Tunnel Investigation of an NACA 65-210 Semispan Wing Equipped with Plug and Retractable Ailerons and a Full-Span Slotted Flap. NACA TN 1663, 1948.

72. Lowry, John G., and Schneiter, Leslie E.: Estimation of Effectiveness of Flap-Type Controls on Sweptback Wings. NACA TN 1674, 1948.

73. Toll, Thomas A. and Schneiter, Leslie E.: Approximate Relations for Hinge-Moment Parameters of Control Surfaces on Swept Wings at Low Mach Numbers. NACA TN 1711, 1948.

74. Schneiter, Leslie E. and Naeseth, Rodger L.: Wind-Tunnel Investigation at Low Speed of the Lateral Control Characteristics of Ailerons Having Three Spans and Three Trailing-Edge Angles on a Semispan Wing Model. NACA TN 1738, 1948.

75. Lockwood, Vernard E. and Watson, James M.: Stability and Control Characteristics at Low Speed of an Airplane Model Having a 38.7° Sweptback Wing with Aspect Ratio 4.51, Taper Ratio 0.54, and Conventional Tail Surfaces. NACA TN 1742, 1948.

76. Sjoberg, S. A., and Reeder, J. P.: Flight Measurements of the Stability, Control, and Stalling Characteristics of an Airplane Having a 35° Sweptback Wing Without Slots and With 80-Percent-Span Slots and a Comparison With Wind-Tunnel Data. NACA TN 1743, 1948.

77. Sandahl, Carl A.: Free-Flight Investigation of the Rolling Effectiveness of a Wing-Spoiler Arrangement at High Subsonic, Transonic, and Supersonic Speeds. NACA RM L8A07, 1948.

78. Williams, Walter C., Forsyth, Charles M., and Brown, Beverly P.: General Handling-Qualities Results Obtained During Acceptance Flight Tests of the Bell XS-1 Airplane. NACA RM L8A09, 1948.

3625

79. Ilk, Richard J.: The Effectiveness at High Speeds of a 10-Percent-Chord Plain Trailing-Edge Flap on the NACA 65-210 Airfoil Section. NACA RM A8A21, 1948.

80. Crane, Harold L., and McLaughlin, Milton D.: Qualitative Measurements of Relative Flap Effectiveness at Transonic Speeds on a Series of Five Thin Airfoils with 25-Percent-Chord Flaps and Various Amounts of Sweepback. NACA RM L8A22, 1948.

81. Lowry, John G., Axelson, John A., and Johnson, Harold I.: Effects of Sweep on Controls. NACA RM L8A28c, 1948.

82. Whitcomb, Richard T.: A Compilation of the Pressures Measured on a Wing and Aileron with Various Amounts of Sweep in the Langley 8-Foot High-Speed Tunnel. NACA RM L8A30a, 1948.

83. Dods, Jules B., Jr.: Wind-Tunnel Investigation of Horizontal Tails. II - Unswept and 35° Swept-Back Plan Forms of Aspect Ratio 4.5. NACA RM A8B11, 1948.

84. Sandahl, Carl A.: Preliminary Free-Flight Investigation of the Effect of Airfoil Section on Aileron Rolling Effectiveness at Transonic and Supersonic Speeds. NACA RM L8B26, 1948.

85. Sivells, James C. and Conner, D. William: Preliminary Investigation at a Mach number of 1.9 and a Reynolds Number of 2,200,000 of Three Ailerons Applicable to the Bell XS-2 Airplane Design. NACA RM L8D02, 1948.

86. Sandahl, Carl A.: Free-Flight Investigation of the Rolling Effectiveness of Several Delta Wing-Aileron Configurations at Transonic and Supersonic Speeds. NACA RM L8D16, 1948.

87. Reynolds, Robert M. and Smith, Donald W.: Aerodynamic Study of a Wing-Fuselage Combination Employing a Wing Swept Back 63°. Subsonic Mach and Reynolds Number Effects on the Characteristics of the Wing and on the Effectiveness of an Elevon. NACA RM A8D20, 1948.

88. Turner, Thomas R., Lockwood, Vernard E., and Vogler, Raymond D.: Preliminary Investigation of Various Ailerons on a 42° Sweptback Wing for Lateral Control at Transonic Speeds. NACA RM L8D21, 1948.

89. Stephenson, Jack D. and Amuedo, Arthur R.: Tests of a Triangular Wing of Aspect Ratio 2 in the Ames 12-Foot Pressure Wind Tunnel. II - The Effectiveness and Hinge Moments of a Constant-Chord Plain Flap. NACA RM A8E03, 1948.

3625

CD-11 back

90. Strass, H. Kurt: Free Flight Investigation of the Rolling Effectiveness at High Subsonic, Transonic, and Supersonic Speeds of Leading-Edge and Trailing-Edge Ailerons in Conjunction with Tapered and Untapered Plan Forms. NACA RM L8E10, 1948.

91. Kolbe, Carl D. and Tinling, Bruce E.: Tests of a Triangular Wing of Aspect Ratio 2 in the Ames 12-Foot Pressure Wind Tunnel. III - The Effectiveness and Hinge Moments of a Skewed Wing-Tip Flap. NACA RM A8E21, 1948.

92. Sandahl, Carl A.: Free-Flight Investigation at Transonic and Supersonic Speeds of the Rolling Effectiveness of a 42.7° Sweptback Wing having Partial-Span Ailerons. NACA RM L8E25, 1948.

93. Sandahl, Carl A.: Free-Flight Investigation at Transonic and Supersonic Speeds of a Wing-Aileron Configuration Simulating the D-558-2 Airplane. NACA RM L8E28, 1948.

94. Johnson, Ben H., Jr., and Bandettini, Angelo: Investigation of a Thin Wing of Aspect Ratio 4 in the Ames 12-Foot Pressure Wind-Tunnel. II - The Effect of Constant-Chord Leading- and Trailing-Edge Flaps on the Low-Speed Characteristics of the Wing. NACA RM A8F15, 1948.

95. Fischel, Jack, and Schneiter, Leslie E.: An Investigation at Low Speed of a 51.3° Sweptback Semispan Wing with a Raked Tip and with 16.7-Percent-Chord Ailerons having Three Spans and Three Trailing-Edge Angles. NACA RM L8F29, 1948.

96. Sandahl, Carl A.: Free-Flight Investigation at Transonic and Supersonic Speeds of the Rolling Effectiveness of a Thin, Unswept Wing having Partial-Span Ailerons. NACA RM L8G20a, 1948.

97. Conner, D. William: Aerodynamic Characteristics of Two All-Movable Wings Tested in the Presence of a Fuselage at a Mach Number of 1.9. NACA RM L8H04, 1948.

98. Anderson, Joseph L. and Krumm, Walter J.: High-Speed Aerodynamic Characteristics of a Lateral-Control Model. I - NACA 0012-64 Section with 20-Percent-Chord Plain Aileron and 0° and 45° Sweepback. NACA RM A8H12, 1948.

99. Fischel, Jack and Schneiter, Leslie E.: An Investigation at Low Speed of a 51.3° Sweptback Semispan Wing Equipped with 16.7-Percent-Chord Plain Flaps and Ailerons having Various Spans and Three Trailing-Edge Angles. NACA RM L8H20, 1948.

3625

100. Dods, Jules B., Jr.: Wind-Tunnel Investigation of Horizontal Tails. III - Unswept and 35° Swept-Back Plan Forms of Aspect Ratio 6. NACA RM A8H30, 1948.

101. Johnson, Ben H., Jr., and Demele, Fred A.: Investigation of a Thin Wing of Aspect Ratio 4 in the Ames 12-Foot Pressure Wind Tunnel. III - The Effectiveness of a Constant-Chord Aileron. NACA RM A8I17, 1948.

3625

102. Strass, H. Kurt: Additional Free-Flight Tests of the Rolling Effectiveness of Several Wing-Spoiler Arrangements at High Subsonic, Transonic, and Supersonic Speeds. NACA RM L8I23, 1948.

103. Johnson, Harold S. and Thompson, Robert F.: Investigation of Horn Balances on a 45° Sweptback Horizontal Tail Surface at High Subsonic Speeds. NACA RM L8J01, 1948.

104. Bennett, Charles V. and Hassell, James L., Jr.: Stability and Control Characteristics of a Free-Flying Model with an Unswept Wing of Aspect Ratio 3 (XS-3). NACA RM L8J04, 1948.

105. Dods, Jules B., Jr.: Wind-Tunnel Investigation of Horizontal Tails. IV - Unswept Plan Form of Aspect Ratio 2 and a Two-Dimensional Model. NACA RM A8J21, 1948.

106. Turner, Thomas R., Lockwood, Vernard E. and Vogler, Raymond D.: Aerodynamic Characteristics at Subsonic and Transonic Speeds of a 42.7° Sweptback Wing Model Having an Aileron with Finite Trailing-Edge Thickness. NACA RM L8K02, 1949.

107. Graham, Robert R. and Koven, William: Lateral-Control Investigation of a 37° Sweptback Wing of Aspect Ratio 6 at a Reynolds Number of 6,800,000. NACA RM L8K12, 1949.

108. Boatright, William B., and Rainey, Robert W.: Hinge-Moment Measurements of a Wing With Leading-Edge and Trailing-Edge Flaps at a Mach Number of 1.93. NACA RM L8K12a, 1949.

109. Conner, D. William and Mitchell, Meade H., Jr.: Control Effectiveness and Hinge-Moment Measurements at a Mach Number of 1.9 of a Nose Flap and Trailing-Edge Flap on a Highly Tapered Low-Aspect-Ratio Wing. NACA RM L8K17a, 1949.

110. Johnson, Ben H., Jr. and Reed, Verlin D.: Investigation of a Thin Wing of Aspect Ratio 4 in the Ames 12-Foot Pressure Wind Tunnel. IV - The Effect of a Constant-Chord Leading-Edge Flap at High Subsonic Speeds. NACA RM A8K19, 1949.

111. Schneiter, Leslie E. and Watson, James M.: Wind-Tunnel Investigation at Low Speeds of Various Plug-Aileron and Lift-Flap Configurations on a 42° Sweptback Semispan Wing. NACA RM L8K19, 1949.

112. Sandahl, Carl A.: Free-Flight Investigation at Transonic and Supersonic Speeds of the Rolling Effectiveness of Several Aileron Configurations on a Tapered Wing having 42.7° Sweepback. NACA RM L8K23, 1949.

113. Sivells, James C. and Goin, Kennith L.: Experimental and Calculated Hinge Moments of Two Ailerons on a 42.7° Sweptback Wing at a Mach Number of 1.9. NACA RM L8K24a, 1949.

114. Luoma, Arvo A.: An Investigation of the Section Characteristics of Plain Unsealed Ailerons on an NACA 66,1-115 Airfoil Section in the Langley 8-Foot High-Speed Tunnel. NACA TN 1596, 1949.

115. Fischel, Jack: Wind-Tunnel Investigation of an NACA 65-210 Semispan Wing Equipped with Circular Plug Ailerons and a Full-Span Slotted Flap. NACA TN 1802, 1949.

116. Fischel, Jack and Vogler, Raymond D.: High-Lift and Lateral Control Characteristics of an NACA 65_2-215 Semispan Wing Equipped with Plug and Retractable Ailerons and a Full-Span Slotted Flap. NACA TN 1872, 1949.

117. Spooner, Stanley H. and Woods, Robert L.: Low-Speed Investigation of Aileron and Spoiler Characteristics of a Wing having 42° Sweepback of the Leading Edge and Circular-Arc Airfoil Sections at Reynolds Numbers of Approximately 6.0×10^6. NACA RM L9A07, 1949.

118. Goin, Kennith L.: Investigation at a Mach number of 1.9 and a Reynolds Number of 2.2×10^6 of Several Flap-Type Lateral-Control Devices on a Wing having 42.7° Sweepback of the leading edge. NACA RM L9A18a, 1949.

119. Lange, Roy H.: Full-Scale Investigation of a Wing with the Leading Edge Swept Back 47.5° and Having Circular-Arc and Finite-Trailing-Edge-Thickness Ailerons. NACA RM L9B02, 1949.

120. Lawrence, Leslie F. and Summers, James L.: Wind-Tunnel Investigation of a Tailless Triangular-Wing Fighter Aircraft at Mach Numbers from 0.5 to 1.5. NACA RM A9B16, 1949.

121. Braslow, Albert L. and Visconti, Fioravante: Two-Dimensional Wind Tunnel Investigation of Two NACA 7-Series Type Airfoils Equipped with a Slot-Lip Aileron, Trailing-Edge Frise Aileron, and a Double Slotted Flap. NACA RM L9B23, 1949.

3625

122. Johnson, Harold I. and Brown, B. Porter: Measurements of Aerodynamic Characteristics of a 35° Sweptback NACA 65-009 Airfoil Model with 1/4-Chord Horn-Balanced Flap by the NACA Wing-Flow Method. NACA RM L9B23a, 1949.

123. Hopkins, Edward J.: Aerodynamic Study of a Wing-Fuselage Combination Employing a Wing Swept Back 63°. - Effects of Split Flaps, Elevons, and Leading-Edge Devices at Low Speed. NACA RM A9C21, 1949.

3625

124. Myers, Boyd C., II, and Kuhn, Richard E.: High-Subsonic Damping-In-Roll Characteristics of a Wing with the Quarter-Chord Line Swept Back 35° and with Aspect Ratio 3 and Taper Ratio 0.6. NACA RM L9C23, 1949.

125. Goodson, Kenneth W. and King, Thomas J., Jr.: Longitudinal Stability and Control Characteristics of a Semispan Wind-Tunnel Model of a Tailless Airplane and a Comparison with Complete-Model Wind-Tunnel Tests and Semi-span-Model Wing-Flow Tests. NACA RM L9C31, 1949.

126. Dods, Jules B., Jr.: Wind-Tunnel Investigation of Horizontal Tails. V - 45° Swept-Back Plan Form of Aspect Ratio 2. NACA RM A9D05, 1949.

127. Schneiter, Leslie E. and Hagerman, John R.: Wind-Tunnel Investigation at High Subsonic Speeds of the Lateral Control Characteristics of an Aileron and a Stepped Spoiler on a Wing with Leading Edge Swept Back 51.3°. NACA RM L9D06, 1949.

128. Donlan, Charles J. and Kuhn, Richard E.: Estimated Transonic Flying Qualities of a Tailless Airplane Based on a Model Investigation. NACA RM L9D08, 1949.

129. Sandahl, Carl A., Bland, William M., Jr. and Strass, H. Kurt: Effects of Some Airfoil-Section Variations on Wing-Aileron Rolling Effectiveness and Drag as Determined in Free Flight at Transonic and Supersonic Speeds. NACA RM L9D12, 1949.

130. Drake, Hubert M.: Measurements of Aileron Effectiveness of Bell X-1 Airplane up to a Mach number of 0.82. NACA RM L9D13, 1949.

131. Bandettini, Angelo and Reed, Verlin D.: The Aerodynamic Characteristics Throughout the Subsonic Speed Range of a Thin, Sharp-Edged Horizontal Tail of Aspect Ratio 4 Equipped with a Constant-Chord Elevator. NACA RM A9E05, 1949.

132. Kuhn, Richard E. and Myers, Boyd C., II: Effects of Mach Number and Sweep on the Damping-In-Roll Characteristics of Wings of Aspect Ratio 4. NACA RM L9E10, 1949.

133. Bollech, Thomas V., and Pratt, George L.: Investigation of Low-Speed Aileron Control Characteristics at a Reynolds Number of 6,800,000 of a Wing with Leading Edge Swept Back 42° With and Without High-Lift Devices. NACA RM L9E24, 1949.

134. Letko, William and Wolhart, Walter D.: Effect of Sweepback on the Low-Speed Static and Rolling Stability Derivatives of Thin Tapered Wings of Aspect Ratio 4. NACA RM L9F14, 1949.

135. Vogler, Raymond D.: Lateral-Control Investigation of Flap-Type Controls on a Wing with Quarter-Chord Line Swept Back 45°, Aspect Ratio 4, Taper Ratio 0.6, and NACA 65A006 Airfoil Section. Transonic Bump Method. NACA RM L9F29a, 1949.

136. Tinling, Bruce E. and Dickson, Jerald K.: Tests of a Model Horizontal Tail of Aspect Ratio 4.5 in the Ames 12-Foot Pressure Wind Tunnel. I - Quarter-Chord Line Swept Back 35°. NACA RM A9G13, 1949.

137. Drake, Hubert M.: Measurements of Aileron Effectiveness of the Bell X-1 Airplane at Mach Numbers Between 0.9 and 1.06. NACA RM L9G19a, 1949.

138. Anderson, Adrien E.: An Investigation at Low Speed of a Large-Scale Triangular Wing of Aspect Ratio Two. III. Characteristics of Wing with Body and Vertical Tail. NACA RM A9H04, 1949.

139. Hagerman, John R. and O'Hare, William M.: Investigation of Extensible Wing-Tip Ailerons on an Untapered Semi-span Wing at 0° and 45° Sweepback. NACA RM L9H04, 1949.

140. Conner, D. William and May, Ellery B., Jr.: Control Effectiveness Load and Hinge-Moment Characteristics of a Tip Control Surface on a Delta Wing at a Mach number of 1.9. NACA RM L9H05, 1949.

141. Tinling, Bruce E. and Dickson, Jerald K.: Tests of a Model Horizontal Tail of Aspect Ratio 4.5 in the Ames 12-Foot Pressure Wind Tunnel. II - Elevator Hinge Line Normal to the Plane of Symmetry. NACA RM A9H11a, 1949.

142. Johnson, Harold S.: Wind-Tunnel Investigation at Low Transonic Speeds of the Effects of Number of Wings on the Lateral-Control Effectiveness of an RM-5 Test Vehicle. NACA RM L9H16, 1949.

3625

143. Graham, Robert R.: Lateral-Control Investigation at a Reynolds Number of 5,300,000 of a Wing of Aspect Ratio 5.8 Sweptforward 32° at the Leading Edge. NACA RM L9H18, 1950.

144. Conner, D. William and May, Ellery B., Jr.: Control Effectiveness and Hinge-Moment Characteristics of a Tip Control Surface on a Low-Aspect-Ratio Pointed Wing at a Mach Number of 1.9. NACA RM L9H26, 1949.

145. Jones, J. Lloyd and Demele, Fred A.: Aerodynamic Study of a Wing-Fuselage Combination Employing a Wing Swept Back 63°. Effects at Subsonic Speeds of a Constant-Chord Elevon on a Wing Cambered and Twisted for a Uniform Load at a Lift Coefficient of 0.25. NACA RM A9I27, 1949.

146. Czarnecki, K. R. and Mueller, James N.: Investigation at Mach Number 1.62 of the Pressure Distribution Over a Rectangular Wing with Symmetrical Circular-Arc Section and 30-Percent-Chord Trailing-Edge Flap. NACA RM L9J05, 1950.

147. Sandahl, Carl A. and Strass, H. Kurt: Comparative Tests of the Rolling Effectiveness of Constant-Chord, Full-Delta, and Half-Delta Ailerons on Delta Wings at Transonic and Supersonic Speeds. NACA RM L9J26, 1949.

148. Fischel, Jack and Watson, James M.: Low-Speed Investigation of Deflectable Wing-Tip Ailerons on an Untapered 45° Sweptback Semi-span Wing with and without an End Plate. NACA RM L9J28, 1949.

149. Fischel, Jack and Hammond, Alexander D.: Investigation of Effect of Span and Spanwise Location of Plain and Stepped Spoiler Ailerons on Lateral Control Characteristics of a Wing with Leading Edge Swept Back 51.3°. NACA RM L9K02, 1950.

150. Johnson, Harold I. and Brown, B. Porter: Measurements of Aerodynamic Characteristics of a 35° Sweptback NACA 65-009 Airfoil Model with 1/4-Chord Bevelled-Trailing-Edge Flap and Trim Tab by the NACA Wing-Flow Method. NACA RM L9K11, 1950.

151. Stivers, Louis S., Jr. and Malick, Alexander W.: Wind-Tunnel Investigation at Mach Numbers From 0.50 to 1.29 of an All-Movable Triangular Wing of Aspect Ratio 4 Alone and with a Body. NACA RM A9L01, 1950.

152. Mitcham, Grady L., Stevens, Joseph E. and Norris, Harry P.: Aerodynamic Characteristics and Flying Qualities of a Tailless Triangular-Wing Airplane Configuration as Obtained from Flights of Rocket-Propelled Models at Transonic and Low Supersonic Speeds. NACA RM L9L07, 1950.

3625

CD-12

153. Naeseth, Rodger L. and O'Hare, William M.: The Effect of Aileron Span and Spanwise Location on the Low-Speed Lateral Control Characteristics of an Untapered Wing of Aspect Ratio 2.09 and 45° Sweepback. NACA RM L9L09a, 1950.

154. Thompson, Robert F.: Lateral-Control Investigation of Flat-Type Controls on a Wing With Quarter-Chord Line Swept Back 35°, Aspect Ratio 4, Taper Ratio 0.6, and NACA 65A006 Airfoil Section. Transonic Bump Method. NACA RM L9L12a, 1950.

155. Lindsey, Walter F., and Ulmann, Edward F.: The Time Lag Between Flap Deflection and Force Development at a Mach number of 4. NACA RM L9L15, 1950.

156. Strass, H. Kurt and Fields, Edison M.: Flight Investigation of the Effect of Thickening the Aileron Trailing Edge on Control Effectiveness for Sweptback Tapered Wings Having Sharp- and Round-Nose Sections. NACA RM L9L19, 1950.

157. Bollech, Thomas V. and Pratt, George L.: Effect of Plain and Step Spoiler Location and Projection on the Lateral Control Characteristics of a Plain and Flapped 42° Sweptback Wing at a Reynolds Number of 6.8×10^6. NACA RM L9L20a, 1950.

158. Krumm, Walter J. and Anderson, Joseph L.: High-Speed Aerodynamic Characteristics of a Lateral-Control Model. II - Modified NACA 0012-64 Section with a 26.6-Percent-Chord, Plain, Trailing-Edge Aileron; Wing Unswept and Swept Back 45°. NACA RM A9L27, 1950.

159. Fischel, Jack, and Watson, James M.: Investigation of Spoiler Ailerons for Use as Speed Brakes or Glide-Path Controls on Two NACA 65-Series Wings Equipped With Full-Span Slotted Flaps. NACA Report 1034, 1949.

160. Johnson, Harold S., and Hagerman, John R.: Wind-Tunnel Investigation at Low Speed of an Unswept Untapered Semispan Wing of Aspect Ratio 3.13 Equipped with Various 25-Percent-Chord Plain Flaps. NACA TN 2080, 1950.

161. Lovell, Powell M., Jr. and Stassi, Paul P.: A Comparison of the Lateral Controllability with Flap and Plug Ailerons on a Sweptback-Wing Model. NACA TN 2089, 1950.

162. Johnson, Harold S. and Hagerman, John R.: Wind-Tunnel Investigation at Low Speed of a 45° Sweptback Untapered Semispan Wing of Aspect Ratio 1.59 Equipped with Various 25-Percent-Chord Plain Flaps. NACA TN 2169, 1950.

3625

163. Johnson, Harold S. and Hagerman, John R.: Wind-Tunnel Investigation at Low Speed of the Lateral Control Characteristics of an Unswept Untapered Semispan Wing of Aspect Ratio 3.13 Equippped with Various 25-Percent-Chord Plain Ailerons. NACA TN 2199, 1950.

164. Riebe, John M. and Watson, James M.: The Effect of End Plates on Swept Wings at Low Speed. NACA TN 2229, 1950.

165. Lovell, Powell M., Jr.: A Comparison of the Lateral Controllability with Flap and Plug Ailerons on a Sweptback-Wing Model Having Full-Span Flaps. NACA TN 2247, 1950.

166. Hammond, Alexander D.: Lateral-Control Investigation of Flap-Type Controls on a Wing with Unswept Quarter-Chord Line, Aspect Ratio 4, Taper Ratio 0.6, and NACA 65A006 Airfoil Section. Transonic-Bump Method. NACA RM L50A03, 1950.

167. Vogler, Raymond D.: Lateral-Control Investigation of Flap-Type Controls on a Wing with Quarter-Chord Line Swept Back 60°, Aspect Ratio 4, Taper Ratio 0.6, and NACA 65A006 Airfoil Section. Transonic-Bump Method. NACA RM L50A17, 1950.

168. Strass, H. Kurt: The Effect of Spanwise Aileron Location on the Rolling Effectiveness of Wings with 0° and 45° Sweep at Subsonic, Transonic, and Supersonic Speeds. NACA RM L50A27, 1950.

169. Olson, Robert N. and Mead, Merrill H.: Aerodynamic Study of a Wing-Fuselage Combination Employing a Wing Swept Back 63°. Effectiveness of an Elevon as a Longitudinal Control and the Effects of Camber and Twist on the Maximum Lift-Drag Ratio at Supersonic Speeds. NACA RM A50A31a, 1950.

170. Strass, H. Kurt, Fields, E. M., and Schult, E. D.: Free-Flight Investigation at Transonic and Supersonic Speeds of the Rolling Effectiveness of a Partial-Span Aileron on an Inversely Tapered Sweptback Wing. NACA RM L50B08, 1950.

171. Krumm, Walter J.: Pressure Coefficients at Mach Numbers from 0.60 to 0.85 for a Semispan Wing with NACA 0012-64 Section, 20-Percent-Chord Plain Aileron, and 0° and 45° Sweepback. NACA RM A50B13, 1950.

172. Johnson, Harold S. and Thompson, Robert F.: Investigation at High Subsonic Speeds of a 45° Sweptback Horizontal Tail with Plain and Horn-Balanced Control Surfaces. NACA RM L50B13, 1950.

173. Kemp, William B., Jr. and Becht, Robert E.: Stability and Control Characteristics at Low Speed of a 1/4-Scale Bell X-5 Airplane Model. Lateral and Directional Stability and Control. NACA RM L50C17a, 1950.

3625

CD-12 back

174. Lockwood, Vernard E.: Aerodynamic and Lateral-Control Characteristics of a 1/28-Scale Model of the Bell X-1 Airplane Wing-Fuselage Combination. Transonic-Bump Method. NACA RM L50C22, 1950.

175. Cleary, Joseph W. and Mellenthin, Jack A.: Wind-Tunnel Tests of a 0.16-Scale Model of the X-3 Airplane at High Subsonic Speeds. - Additional Stability and Control Characteristics and the Aerodynamic Effects of External Stores and Ram Jets. NACA RM A50C30, 1950.

176. Lange, Roy H. and McLemore, Huel C.: Low-Speed Lateral Stability and Aileron-Effectiveness Characteristics at a Reynolds Number of 3.5×10^6 of a Wing with Leading-Edge Sweepback Decreasing from 45° at the Root to 20° at the Tip. NACA RM L50D14, 1950.

177. Sandahl, Carl A. and Strass, H. Kurt: Rolling Effectiveness of a Thin Tapered Wing Having Partial-Span Ailerons as Determined by Rocket-Powered Test Vehicles. NACA RM L50D17, 1950.

178. Fischel, Jack and O'Hare, William M.: Low-Speed Investigation of Deflectable Wing-Tip Elevators on a Low-Aspect-Ratio Untapered 45° Sweptback Semispan Wing With and Without an End Plate. NACA RM L50D19, 1950.

179. Thompson, Jim Rogers, Roden, William S. and Eggleston, John M.: Flight Investigation of the Aileron Characteristics of the Douglas D-558-I Airplane (BuAero No. 37972) at Mach Numbers Between 0.6 and 0.89. NACA RM L50D20, 1950.

180. Hammond, Alexander D.: Lateral-Control Investigation of Flap-Type and Spoiler-Type Controls on a Wing With Quarter-Chord-Line Sweepback of 60°, Aspect Ratio 2, Taper Ratio 0.6, and NACA 65A006 Airfoil Section. Transonic Bump Method. NACA RM L50E09, 1950.

181. Rathert, George A., Jr., Rolls, S. Stewart, and Hanson, Carl M.: The Transonic Characteristics of a Low-Aspect-Ratio Triangular Wing with a Constant-Chord Flap as Determined by Wing-Flow Tests, Including Correlation with Large-Scale Tests. NACA RM A50E10, 1950.

182. Guy, Lawrence D.: Some Effects of Chordwise Fences on the Aerodynamic Characteristics of Four Moderately Sweptback Wings in the Low-Lift Range at Transonic Mach Numbers and at Mach Number 1.9. NACA RM L50E16, 1950.

183. Wilmerding, J. V., Stillwell, W. H. and Sjoberg, S. A.: Flight Measurements with the Douglas D-558-II (BuAer No. 37974) Research Airplane. Lateral Control Characteristics as Measured in Abrupt Aileron Rolls at Mach Numbers up to 0.86. NACA RM L50E17, 1950.

3625

184. Mitchell, Meade H., Jr.: Effects of Varying the Size and Location of Trailing-Edge Flap-Type Controls on the Aerodynamic Characteristics of an Unswept Wing at a Mach Number of 1.9. NACA RM L50F08, 1950.

185. Sandahl, Carl A., Strass, H. Kurt and Piland, Robert O.: The Rolling Effectiveness of Wing-Tip Ailerons as Determined by Rocket-Powered Test Vehicles and Linear Supersonic Theory. NACA RM L50F21, 1950.

186. MacLeod, Richard G.: Investigation of Flap-Type Ailerons on an Untapered Wing Having an Aspect Ratio of 3.7, 45° Sweepback, and an NACA 65A009 Airfoil Section. Transonic Bump Method. NACA RM L50G03, 1950.

187. Turner, Thomas R. and Fikes, Joseph E.: Investigation at Transonic Speeds of a 35-Percent-Chord Aileron on a Tapered Wedge-Type Wing of Aspect Ratio 2.5 With and Without a Fuselage. NACA RM L50G13a, 1950.

188. Strass, H. Kurt, Fields, E. M., and Purser, Paul E.: Experimental Determination of Effect of Structural Rigidity on Rolling Effectiveness of Some Straight and Swept Wings at Mach Numbers from 0.7 to 1.7. NACA RM L50G14b, 1950.

189. Wolhart, Walter D. and Michael, William H., Jr.: Wind-Tunnel Investigation of the Low-Speed Longitudinal and Lateral Control Characteristics of a Triangular-Wing Model of Aspect Ratio 2.31 Having Constant-Chord Control Surfaces. NACA RM L50G17, 1950.

190. Rathert, George A., Jr., Rolls, L. Stewart, Winograd, Lee and Cooper, George E.: Preliminary Flight Investigation of the Wing-Dropping Tendency and Lateral-Control Characteristics of a 35° Swept-Wing Airplane at Transonic Mach Numbers. NACA RM A50H03, 1950.

191. Johnson, Harold I. and Goodman, Harold R.: Measurements of Aerodynamic Characteristics of a 35° Sweptback NACA 65-009 Airfoil Model with 1/4-Chord Flap having a 31-Percent-Flap-Chord Overhang Balance by the NACA Wing-Flow Method. NACA RM L50H09, 1950.

192. Scherrer, Richard and Dennis, David H.: Lateral-Control Characteristics and Dihedral Effect of a Wing-Body Combination with a Variable-Incidence Triangular Wing and Wing-Tip Ailerons at a Mach Number of 1.52. NACA RM A50H10, 1951.

3625

193. Krumm, Walter J. and Cleary, Joseph W.: High-Speed Aerodynamic Characteristics of a Lateral-Control Model. III - Section Characteristics, Fence Studies, and Tabulated Pressure Coefficients with Modified NACA 0012-64 Section, 26.6-Percent-Chord, Plain Aileron, 0° and 45° Sweepback. NACA RM A50H17, 1950.

194. Robinson, Ross B.: An Investigation of a Supersonic Aircraft Configuration Having a Tapered Wing with Circular-Arc Sections and 40° Sweepback. Static Lateral Control Characteristics at Mach Numbers of 1.40 and 1.59. NACA RM L50I11, 1950.

195. Thompson, Robert F.: Investigation of a 42.7° Sweptback Wing Model to Determine the Effects of Trailing-Edge Thickness on the Aileron Hinge-Moment and Flutter Characteristics at Transonic Speeds. NACA RM L50J06, 1950.

196. Stivers, Louis S., Jr. and Malick, Alexander W.: Wind-Tunnel Investigation at Mach Numbers from 0.50 to 1.29 of an Unswept Tapered Wing of Aspect Ratio 2.67 With Leading- and Trailing-Edge Flaps. Trailing-Edge Flaps Deflected. NACA RM A50J09b, 1950.

197. Czarnecki, K. R. and Mueller, James N.: Investigation at Supersonic Speeds of Some of the Factors Affecting the Flow Over a Rectangular Wing with Symmetrical Circular-Arc Section and 30-Percent-Chord Trailing-Edge Flap. NACA RM L50J18, 1951.

198. Pasamanick, Jerome and Sellers, Thomas B.: Low-Speed Investigation of the Effect of Several Flap and Spoiler Ailerons on the Lateral Characteristics of a 47.5° Sweptback-Wing - Fuselage Combination at a Reynolds Number of 4.4×10^6. NACA RM L50J20, 1950.

199. Spearman, M. Leroy and Webster, Robert A.: An Investigation at Mach Numbers of 1.40 and 1.59 of the Effects of Aileron Profile on the Aerodynamic Characteristics of a Complete Model of a Supersonic Aircraft Configuration. NACA RM L50J31, 1951.

200. May, Ellery B., Jr.: Investigation of the Aerodynamic Effects of an External Store in Combination with 60° Delta and Low-Aspect-Ratio Tapered Wings at a Mach Number of 1.9. NACA RM L50K03, 1951.

201. Olson, Robert N. and Mead, Merrill H.: Aerodynamic Study of a Wing-Fuselage Combination Employing a Wing Swept Back 63° - Effectiveness at Supersonic Speeds of a 30-Percent Chord, 50-Percent Semispan Elevon as a Lateral Control Device. NACA RM A50K07, 1951.

3625

202. Stivers, Louis S., Jr. and Malick, Alexander W.: Wind-Tunnel Investigation at Mach Numbers from 0.50 to 1.29 of an Unswept, Tapered Wing of Aspect Ratio 2.67 With Leading- and Trailing-Edge Flaps. - Leading-Edge Flaps Deflected. NACA RM A50K10, 1951.

203. Stivers, Louis S., Jr. and Malick, Alexander W.: Wind-Tunnel Investigation at Mach Numbers from 0.50 to 1.29 of an Unswept, Tapered Wing of Aspect Ratio 2.67 With Leading- and Trailing-Edge Flaps. - Flaps Deflected in Combination. NACA RM A50K27b, 1951.

3625

204. Wiley, Harleth G.: Aerodynamic Characteristics at Transonic Speeds of a 60° Delta Wing Equipped with a Triangular Plan-Form Control Having a Skewed Hinge Axis and an Overhang Balance. Transonic-Bump Method. NACA RM L50L01, 1951.

205. May, Ellery B., Jr.: Investigation of the Effects of Leading-Edge Chord-Extensions on the Aerodynamic and Control Characteristics of Two Sweptback Wings at Mach Numbers of 1.41, 1.62, and 1.96. NACA RM L50L06a, 1951.

206. Conner, D. William and Mitchell, Meade H., Jr.: Effects of Spoiler on Airfoil Pressure Distribution and Effects of Size and Location of Spoilers on the Aerodynamic Characteristics of a Tapered Unswept Wing of Aspect Ratio 2.5 at a Mach Number of 1.90. NACA RM L50L20, 1951.

207. Johnson, Harold S. and Hagerman, John R.: Wind-Tunnel Investigation at Low Speed of Lateral Control Characteristics of an Untapered 45° Sweptback Semispan Wing of Aspect Ratio 1.59 Equipped with Various 25-Percent-Chord Plain Ailerons. NACA TN 2316, 1951.

208. Schuldenfrei, Marvin J., Comisarow, Paul, and Goodson, Kenneth W.: Stability and Control Characteristics of a Complete Airplane Model Having a Wing with Quarter-Chord Line Swept Back 40°, Aspect Ratio 2.50, and Taper Ratio 0.42. NACA TN 2482, 1951.

209. Harper, John J.: Wind-Tunnel Investigation of Effects of Various Aerodynamic Balance Shapes and Sweepback on Control-Surface Characteristics of Semispan Tail Surfaces with NACA 0009, 0015, 66-009, 66(215)-014, and Circular-Arc Airfoil Sections. NACA TN 2495, 1951.

210. Cole, Henry Ambrose, Jr. and Ganzer, Victor Martin: Experimental Investigation of Rolling Performance of Straight and Sweptback Flexible Wings with Various Ailerons. NACA TN 2563, 1951.

211. Delany, Noel K. and Hayter, Nora-Lee F.: Low-Speed Investigation of a 0.16-Scale Model of the X-3 Airplane - Lateral and Directional Characteristics. NACA RM A51A16, 1951.

212. Hawes, John G. and May, Ralph W., Jr.: Investigation at Low Speed of the Effectiveness and Hinge Moments of a Constant-Chord Ailavator on a Large-Scale Triangular Wing with Section Modification. NACA RM L51A26, 1951.

213. Wolhart, Walter D.: Wind-Tunnel Investigation at Low-Speed of the Effects of Symmetrical Deflection of Half-Delta Tip Controls on the Damping in Roll and Yawing Moment Due to Rolling of a Triangular-Wing Model. NACA RM L51B09, 1951.

214. Johnson, Harold S.: Wind-Tunnel Investigation at Subsonic and Low Transonic Speeds of the Effects of Aileron Span and Spanwise Location on the Rolling Characteristics of a Test Vehicle with Three Untapered 45° Sweptback Wings. NACA RM L51B16, 1951.

215. Lange, Roy H. and Fink, Marvin P.: Effect of a Deflectable Wing-Tip Control on the Low-Speed Lateral and Longitudinal Characteristics of a Large-Scale Wing with the Leading Edge Swept Back 47.5°. NACA RM L51C07, 1951.

216. Stone, David G.: Comparisons of the Effectiveness and Hinge Moments of All-Movable Delta and Flap-Type Controls on Various Wings. NACA RM L51C22, 1951.

217. Kolbe, Carle D. and Bandettini, Angelo: Investigation in the Ames 12-Foot Pressure Wind Tunnel of a Model Horizontal Tail of Aspect Ratio 3 and Taper Ratio 0.5 Having the Quarter-Chord Line Swept Back 45°. NACA RM A51D02, 1951.

218. Strass, H. Kurt, Fields, Edison M. and Schult, Eugene D.: Some Effects of Spanwise Aileron Location and Wing Structural Rigidity on the Rolling Effectiveness of 0.3-Chord Flap-Type Ailerons on a Tapered Wing Having 63° Sweepback at the Leading Edge and NACA 64A005 Airfoil Sections. NACA RM L51D18a, 1951.

219. Jaquet, Byron M., Queijo, Manuel J. and Lichtenstein, Jacob H.: Low-Speed Static Longitudinal Stability and Control Characteristics of a 60° Triangular-Wing Model Having Half-Delta Tip Controls. NACA RM L51D20a, 1951.

220. Ulmann, Edward F. and Lord, Douglas R.: An Investigation of Flow Characteristics at Mach Number 4.04 over 6- and 9-Percent-Thick Symmetrical Circular-Arc Airfoils Having 30-Percent-Chord Trailing-Edge Flaps. NACA RM L51D30, 1951.

3625

221. Phelps, E. Ray and Lazzeroni, Frank A.: Wind-Tunnel Investigation of the Aerodynamic Characteristics of 1/15-Scale Model of the Northrop MX-775A Missile. NACA RM A51E28, 1951.

222. Lockwood, Vernard E. and Fikes, Joseph E.: Aerodynamic Characteristics at Transonic Speeds of a Tapered 45° Sweptback Wing of Aspect Ratio 3 Having a Full-Span Flap-Type Control. Transonic-Bump Method. NACA RM L51F06a, 1951.

223. Hadaway, William M. and Salmi, Reino J.: Investigation of Low-Speed Lateral Control and Hinge-Moment Characteristics of a 20-Percent-Chord Plain Aileron on a 47.7° Sweptback Wing of Aspect Ratio 5.1 at a Reynolds Number of 6.0×10^6. NACA RM L51F22, 1951.

224. Vogler, Raymond D., Lockwood, Vernard E. and Turner, Thomas R.: An Investigation at Transonic Speeds of the Effects of Control Chord and Span on the Control Characteristics of a Tapered Wedge-Type Wing of Aspect Ratio 2.5. Transonic-Bump Method. NACA RM L51G03, 1951.

225. Martz, C. William and Church, James D.: Flight Investigation at Subsonic, Transonic, and Supersonic Velocities of the Hinge-Moment Characteristics, Lateral-Control Effectiveness, and Wing Damping in Roll of a 60° Sweptback Delta Wing with Half-Delta Tip Ailerons. NACA RM L51G18, 1951.

226. Fields, Edison M. and Strass, H. Kurt: Free-Flight Measurements at Mach Numbers from 0.7 to 1.6 of Some Effects of Airfoil-Thickness Distribution and Trailing-Edge Angle on Aileron Rolling Effectiveness and Drag for Wings with 0° and 45° Sweepback. NACA RM L51G27, 1951.

227. Dods, Jules B., Jr., and Tinling, Bruce E.: Summary of Results of a Wind-Tunnel Investigation of Nine Related Horizontal Tails. NACA RM A51G31a, 1951.

228. Strass, H. Kurt and Marley, Edward T.: Rolling Effectiveness of All-Movable Wings at Small Angles of Incidence at Mach Numbers From 0.6 to 1.6. NACA RM L51H03, 1951.

229. Sadoff, Melvin, Ankenbruck, Herman O., and O'Hare, William: Stability and Control Measurements Obtained During USAF-NACA Cooperative Flight-Test Program on the X-4 Airplane (USAF No. 46-677). NACA RM A51H09, 1951.

230. Lipson, Stanley and Barnett, U. Reed, Jr.: Comparison of Semi-span and Full-Span Tests of a 47.5° Sweptback Wing with Symmetrical Circular-Arc Sections and Having Drooped-Nose Flaps, Trailing-Edge Flaps, and Ailerons. NACA RM L51H15, 1951.

3625

CD-13

231. MacLeod, Richard G.: Low-Speed Wind-Tunnel Investigation of a Fixed and a Free-Floating Wing-Tip Aileron on a Wing with Leading Edge Swept Back 51.3°. NACA RM L51H16a, 1952.

232. Wiley, Harleth G. and Zontek, Leon: Aerodynamic Characteristics at Transonic Speeds of a 60° Delta Wing Equippped with a Constant-Chord Flap-Type Control with and without an Unshielded Horn Balance. Transonic-Bump Method. NACA RM L51H22, 1952.

233. Moseley, William C., Jr. and Watson, James M.: Investigation of Wing-Tip Ailerons on a 51.3° Sweptback Wing at Transonic Speeds by the Transonic-Bump Method. NACA RM L51H27, 1951.

234. Hammond, Alexander D.: The Effect of Raking the Aileron Tips on the Lateral-Control and Hinge-Moment Characteristics of a 20-Percent-Chord Partial-Span Outboard Aileron on a Wing with Leading Edge Swept Back 51.3°. NACA RM L51H29, 1951.

235. Mitcham, Grady L., Crabill, Normal L. and Stevens, Joseph E.: Flight Determination of the Drag and Longitudinal Stability and Control Characteristics of a Rocket-Powered Model of a 60° Delta-Wing Airplane from Mach Numbers of 0.75 to 1.70. NACA RM L51I04, 1951.

236. Jaquet, Byron M. and Queijo, Manuel J.: Low-Speed Wind-Tunnel Investigation of Lateral Control Characteristics of a 60° Triangular-Wing Model Having Half-Delta Tip Controls. NACA RM L51I10, 1951.

237. Martz, C. William, Church, James D., and Goslee, John W.: Free-Flight Investigation to Determine Force and Hinge-Moment Characteristics at Zero Angle of Attack of a 60° Sweptback Half-Delta Tip Control on a 60° Sweptback Delta Wing at Mach Numbers Between 0.68 and 1.44. NACA RM L51I14, 1951.

238. Pfyl, Frank A.: Aerodynamic Study of a Wing-Fuselage Combination Employing a Wing Swept Back 63° - Effectiveness of an Inboard Elevon as a Longitudinal- and Lateral-Control Device at Subsonic and Supersonic Speeds. NACA RM A51I18, 1951.

239. Jacobsen, Carl R.: Effects on Control Effectiveness of Systematically Varying the Size and Location of Trailing-Edge Flaps on a 45° Sweptback Wing at a Mach number of 1.9. NACA RM L51I26, 1951.

240. Strass, H. Kurt and Marley, Edward T.: Rocket-Model Investigation of the Rolling Effectiveness of a Fighter-Type Wing-Control Configuration at Mach Numbers from 0.6 to 1.5. NACA RM L51I28, 1952.

3625

241. Phillips, William Hewitt and Thompson, Robert F.: Investigation by the Transonic-Bump Method of a 35° Sweptback Semispan Model Equipped with a Flap Operated by a Series of Servovanes Located Ahead of and Geared to the Flap. NACA RM L51J10, 1951.

242. Lichtenstein, Jacob H. and Jaquet, Byron M.: Low-Speed Static Longitudinal Stability and Control Characteristics of 60° Triangular-Wing and Modified 60° Triangular-Wing Models Having Half-Delta and Half-Diamond Tip Controls. NACA RM L51K08, 1952.

243. Schult, Eugene D., Strass, H. Kurt and Fields, Edison M.: Free-Flight Measurements of Some Effects of Aileron Span, Chord, and Deflection and of Wing Flexibility on the Rolling Effectiveness of Ailerons on Sweptback Wings at Mach Numbers Between 0.8 and 1.6. NACA RM L51K16, 1952.

244. Strass, H. Kurt: Summary of Some Effective Aerodynamic Twisting-Moment Coefficients of Various Wing-Control Configurations at Mach Numbers from 0.6 to 1.7 as Determined From Rocket-Powered Models. NACA RM L51K20, 1952.

245. Graham, David and Koenig, David G.: Tests in the Ames 40- by 80-Foot Wind Tunnel of an Airplane Configuration with an Aspect Ratio 2 Triangular Wing and an All-Movable Horizontal Tail. Lateral Characteristics. NACA RM A51L03, 1952.

246. Marley, Edward T. and English, Roland D.: Some Effects of Aeroelasticity at Mach Numbers from 0.7 to 1.6 on the Rolling Effectiveness of Thin-Flat-Plate Delta Wings Having 45° Swept Leading Edges and Full-Span Constant-Chord Ailerons. NACA RM L51L05, 1952.

247. Vogler, Raymond D.: Wind-Tunnel Investigation at High Subsonic Speeds of Spoilers of Large Projection on an NACA 65A006 Wing with Quarter-Chord Line Swept Back 32.6°. NACA RM L51L10, 1952.

248. Lockwood, Vernard E. and Hagerman, John R.: Aerodynamic Characteristics at Transonic Speeds of a Tapered 45° Sweptback Wing of Aspect Ratio 3 Having a Full-Span Flap Type of Control with Overhang Balance. Transonic-Bump Method. NACA RM L51L11, 1952.

249. Moseley, William C., Jr.: Preliminary Investigation of the Effects of a Paddle Balance on the Control Characteristics at Transonic Speeds of a Tapered 45.58° Sweptback Wing of Aspect Ratio 3 Having a Full-Span Flap-Type Control. NACA RM L51L19, 1952.

3625

CD-13 back

250. Fischel, Jack, Naeseth, Rodger L., Hagerman, John R., and O'Hare, William M.: Effect of Aspect Ratio on the Low-Speed Lateral Control Characteristics of Untapered Low-Aspect-Ratio Wings Equipped with Flap and with Retractable Ailerons. NACA Rept. 1091, 1952.

251. Fikes, Joseph E.: Hinge-Moment and Other Aerodynamic Characteristics at Transonic Speeds of a Quarter-Span Spoiler on a Tapered 45° Sweptback Wing of Aspect Ratio 3. NACA RM L52A03, 1952.

252. Stone, David G.: Recent Data on Controls. NACA RM L52A10, 1952.

253. Lowry, John G. and Fikes, Joseph E.: Preliminary Investigation of Control Characteristics at Transonic Speeds of a Tapered 45° Sweptback Wing of Aspect Ratio 3 Having a Horn-Balanced Full-Span Control. NACA RM L52A11, 1952.

254. Kelly, Mark W.: Low-Speed Aerodynamic Characteristics of a Large-Scale 60° Swept-Back Wing with High Lift Devices. NACA RM A52A14a, 1952.

255. Lockwood, Vernard E. and Fikes, Joseph E.: Preliminary Investigation at Transonic Speeds of the Effect of Balancing Tabs on the Hinge-Moment and other Aerodynamic Characteristics of a Full-Span Flap on a Tapered 45° Sweptback Wing of Aspect Ratio 3. NACA RM L52A23, 1952.

256. Crane, Harold L., Beckhardt, Arnold R., and Matheny, Cloyce E.: Flight Measurements of the Lateral Stability and Control Characteristics of a High-Speed Fighter Airplane. NACA RM L52B14, 1952.

257. Fitzpatrick, James E., and Woods, Robert L.: Low-Speed Lateral-Control Characteristics of an Unswept Wing with Hexagonal Airfoil Sections and Aspect Ratio 2.5 Equipped With Spoilers and With Sharp- and Thickened-Trailing-Edge Flap-Type Ailerons at a Reynolds number of 7.6×10^6. NACA RM L52B15, 1952.

258. Trant, James P., Jr.: An Investigation of Longitudinal Control Characteristics of a Wing-Tip Control Surface on a Sweptback Wing at Transonic Speeds by the NACA Wing-Flow Method. NACA RM L52B15a, 1952.

259. James, Harry A.: Low-Speed Aerodynamic Characteristics of a Large-Scale 45° Swept-Back Wing with Partial-Span Slats, Double-Slotted Flaps, and Ailerons. NACA RM A52B19, 1952.

3625

260. Hammond, Alexander D. and McMullan, Barbara M.: Chordwise Pressure Distribution at High Subsonic Speeds Near Midsemispan of a Tapered 35° Sweptback Wing of Aspect Ratio 4 Having NACA 65A006 Airfoil Sections and Equipped with Various Spoiler Ailerons. NACA RM L52C28, 1952.

261. Boyd, John W.: Aerodynamic Characteristics of Two 25-Percent-Area Trailing-Edge Flaps on an Aspect Ratio 2 Triangular Wing at Subsonic and Supersonic Speeds. NACA RM A52D01c, 1952.

262. Barnett, U. Reed, Jr., and Lipson, Stanley: Effects of Several High-Lift and Stall-Control Devices on the Aerodynamic Characteristics of a Semispan 49° Sweptback Wing. NACA RM L52D17a, 1952.

263. Lockwood, Vernard E., and Fikes, Joseph E.: Control Characteristics at Transonic Speeds of a Linked Flap and Spoiler on a Tapered 45° Sweptback Wing of Aspect Ratio 3. NACA RM L52D25, 1952.

264. Hammond, Alexander D., and Watson, James M.: The Aerodynamic Characteristics at Transonic Speeds of an All-Movable, Tapered, 45° Sweptback, Aspect-Ratio-4 Tail Surface Deflected About a Skewed Hinge Axis. NACA RM L52D28, 1952.

265. Nielsen, Jack N., Kaattari, George E., and Drake, William C.: Comparison Between Prediction and Experiment for All-Movable Wing and Body Combinations at Supersonic Speeds - Lift, Pitching Moment, and Hinge Moment. NACA RM A52D29, 1952.

266. Sisk, Thomas R.: Flight Investigation of the Aileron Effectiveness of the Republic XF-91 Airplane over a Mach Number Range from 0.40 to 0.91. NACA RM L52E07a, 1952.

267. Spearman, M. Leroy, and Robinson, Ross B.: Wind-Tunnel Investigation of a Ram-Jet Canard Missile Model Having a Wing and Canard Surfaces of Delta Plan Form With 70° Swept Leading Edges. Longitudinal and Lateral Stability and Control Characteristics at a Mach Number of 1.60. NACA RM L52E15, 1952.

268. Mueller, James N., and Czarnecki, K. R.: Preliminary Data at a Mach Number of 2.40 of the Characteristics of Flap-Type Controls Equipped with Plain Overhang Balances. NACA RM L52F10, 1952.

269. Dods, Jules B., Jr.: Control Effectiveness and Hinge-Moment Characteristics at Low Speed of Large-Chord, Horn-Balanced, Flap-Type Controls on a Triangular Wing of Aspect Ratio 2. NACA RM A52F13, 1952.

3625

270. Hammond, Alexander D., and Watson, James M.: Lateral-Control Investigation at Transonic Speeds of Retractable Spoiler and Plug-Type Spoiler-Slot Ailerons on a Tapered 60° Sweptback Wing of Aspect Ratio 2. Transonic-Bump Method. NACA RM L52F16, 1952.

271. Bandettini, Angelo: An Investigation at Subsonic Speeds of the Rolling Effectiveness of a Small Perforated Spoiler on a Wing Having 45° of Sweepback. NACA RM A52G02, 1952.

272. Hammond, Alexander D.: The Effect of Various Aerodynamic Balances on the Low-Speed Lateral-Control and Hinge-Moment Characteristics of a 0.20-Chord Partial-Span Outboard Aileron on a Wing with Leading Edge Swept Back 51.3°. NACA RM L52G03, 1952.

273. Thompson, Robert F., and Moseley, William C., Jr.: Hinge-Moment and Control Effectiveness Characteristics of an Outboard Flap with an Overhang Nose Balance on a Tapered 35° Sweptback Wing of Aspect Ratio 4. Transonic-Bump Method. NACA RM L52G08, 1952.

274. Watson, James M.: Low-Speed Lateral-Control Investigation of a Flap-Type Spoiler Aileron with and without a Deflector and Slot on a 6-Percent-Thick, Tapered 45° Sweptback Wing of Aspect Ratio 4. NACA RM L52G10, 1952.

275. Martz, C. William, Church, James D., and Goslee, John W.: Rocket-Model Investigation to Determine the Force and Hinge-Moment Characteristics of a Half-Delta Tip Control on a 59° Sweptback Delta Wing Between Mach Numbers of 0.55 and 1.43. NACA RM L52H06, 1952.

276. Schult, Eugene D., and Fields, Edison M.: Free-Flight Measurements of Some Effects of Spoiler Span and Projection and Wing Flexibility on Rolling Effectiveness and Drag of Plain Spoilers on a Tapered Sweptback Wing at Mach Numbers Between 0.6 and 1.6. NACA RM L52H06a, 1952.

277. Guy, Lawrence D.: Control Hinge-Moment and Effectiveness Characteristics of a 60° Half-Delta Tip Control on a 60° Delta Wing at Mach Numbers of 1.41 and 1.96. NACA RM L52H13, 1952.

278. Moul, Martin T., and Baber, Hal T., Jr.: The Longitudinal Stability and Control Characteristics of a 60° Delta-Wing Missile Having Half-Delta Tip Controls as Obtained From a Free-Flight Investigation at Transonic and Supersonic Speeds. NACA RM L52H14, 1952.

279. Fields, Edison M.: Some Effects of Spoiler Height, Wing Flexibility, and Wing Thickness on Rolling Effectiveness and Drag of Unswept Wings at Mach Numbers Between 0.4 and 1.7. NACA RM L52H18, 1952.

3625

280. Lockwood, Vernard E., and Fikes, Joseph E.: Investigation at Transonic Speeds of the Effect of a Positive-Lift Balancing Tab on the Hinge-Moment and Lift Characteristics of a Full-Span Flap on a Tapered 45° Sweptback Wing of Aspect Ratio 3. NACA RM L52J09, 1952.

281. Wiley, Harleth G., and Solomon, Martin: A Wind-Tunnel Investigation at Low Speeds of the Aerodynamic Characteristics of Various Spoiler Configurations on a Thin 60° Delta Wing. NACA RM L52J13, 1952.

282. Croom, Delwin R.: Characteristics of Flap-Type Spoiler Ailerons at Various Locations on a 60° Delta Wing With a Double Slotted Flap. NACA RM L52J24, 1952.

283. Jacobsen, Carl R.: Control Characteristics of Trailing-Edge Spoilers on Untapered Blunt Trailing-Edge Wings of Aspect Ratio 2.7 with 0° and 45° Sweepback at Mach Numbers of 1.41 and 1.96.

284. Smith, Willard G.: Wind-Tunnel Investigation at Subsonic and Supersonic Speeds of a Model of a Tailless Fighter Airplane Employing a Low-Aspect-Ratio Swept-Back Wing - Stability and Control. NACA RM A52J30, 1953.

285. Bland, William M., Jr., and Marley, Edward T.: A Free-Flight Investigation at Zero Lift in the Mach Number Range Between 0.7 and 1.4 to Determine the Effectiveness of an Inset Tab as a Means of Aerodynamically Relieving Aileron Hinge Moments. NACA RM L52K07, 1953.

286. Alford, William J., Jr., and Spreemann, Kenneth P.: Small-Scale Transonic Investigation of a 45° Swept-Back Wing of Aspect Ratio 4 with Combinations of Nose-Flap Deflections and Wing Twist. NACA RM L52K13, 1953.

287. Finch, Thomas W., and Briggs, Donald W.: Preliminary Results of Stability and Control Investigation of the Bell X-5 Research Airplane. NACA RM L52K18b, 1953.

288. Klinar, Walter J., and Lee, Henry A.: Free-Spinning-Tunnel Investigation of a Model Having a 60° Delta Wing with Half-Delta Ailerons Installed. NACA RM L52K24a, 1953.

289. Czarnecki, K. R., and Lord, Douglas R.: Hinge-Moment Characteristics for Several Tip Controls on a 60° Sweptback Delta Wing at Mach Number 1.61. NACA RM L52K28, 1953.

3625

290. McFall, John C., Jr., and Hollinger, James A.: Longitudinal Stability, Control Effectiveness, and Drag Characteristics at Transonic Speeds of a Rocket-Propelled Model of an Airplane Configuration Having an Unswept Tapered Wing of Aspect Ratio 3.0 and NACA 65A004.5 Airfoil Sections. NACA RM L52L04, 1953.

291. Koenig, David G.: Tests in the Ames 40- by 80-Foot Wind Tunnel of an Airplane Configuration with an Aspect Ratio 3 Triangular Wing and an All-Movable Horizontal Tail-Longitudinal and Lateral Characteristics. NACA RM A52L15, 1953.

292. Guy, Lawrence D.: Control Hinge-Moment and Effectiveness Characteristics of a Horn-Balanced, Flap-Type Control on a 55° Sweptback Triangular Wing of Aspect Ratio 3.5 at Mach Numbers of 1.41, 1.62, and 1.96. NACA RM L52L15, 1953.

293. Franks, Ralph W.: Tests in the Ames 40- by 80-Foot Wind Tunnel of Two Airplane Models Having Aspect Ratio 2 Trapezoidal Wings of Taper Ratios 0.33 and 0.20. NACA RM A52L16, 1953.

294. Paulson, John W., and Johnson, Joseph L., Jr.: Free-Flight-Tunnel Investigation of the Low-Speed Stability and Control Characteristics of a Model Having a Fuselage of Relatively Flat Cross Section. NACA RM L52L22, 1953.

295. Mueller, James N.: Investigation of Spoilers at a Mach Number of 1.93 to Determine the Effects of Height and Chordwise Location on the Section Aerodynamic Characteristics of a Two-Dimensional Wing. NACA RM L52L31, 1953.

296. Weick, Fred E., Sevelson, Maurice S., McClure, James G., and Flanagan, Marion D.: Investigation of Lateral Control Near the Stall. Flight Investigation With a Light High-Wing Monoplane Tested With Various Amounts of Washout and Various Lengths of Leading-Edge Slot. NACA TN 2948, 1953.

297. Hadaway, William M.: Low-Speed Lateral Control Characteristics of an Unswept Wing with Hexagonal Airfoil Sections and Aspect Ratio 4.0 at a Reynolds Number of 6.2×10^6. NACA RM L53A29, 1953.

298. Kindell, William H.: Effects of Span and Spanwise and Chordwise Location on the Control Effectiveness of Spoilers on a 50° Sweptback Wing at Mach Numbers of 1.41 and 1.96. NACA RM L53B09, 1953.

299. Cancro, Patrick A.: Low-Speed Aileron Effectiveness as Determined by Force Tests and Visual-Flow Observations on a 52° Sweptback Wing with and Without Chord-Extensions. NACA RM L53B26, 1953.

3625

300. Weil, Joseph, Sleeman, William C., Jr., and Byrnes, Andrew L., Jr.: Investigation of the Effects of Wing and Tail Modifications on the Low-Speed Stability Characteristics of a Model Having a Thin 40° Swept Wing of Aspect Ratio 3.5. NACA RM L53C09, 1953.

301. Scallion, William I.: Low-Speed Investigation of the Aerodynamic, Control, and Hinge-Moment Characteristics of Two Types of Controls on a Delta-Wing-Fuselage Model with and without Nacelles. NACA RM L53C18, 1953.

302. Smith, Donald W., and Reed, Verlin D.: Subsonic Static Longitudinal Stability and Control Characteristics of a Wing-Body Combination Having a Pointed Wing of Aspect Ratio 2 with Constant-Percent-Chord Trailing-Edge Elevons. NACA RM A53C20, 1953.

303. Hammond, Alexander D., and Keffer, Barbara M.: The Effect at High Subsonic Speeds of a Flap-Type Aileron on the Chordwise Pressure Distribution near Midsemispan of a Tapered 35° Sweptback Wing of Aspect Ratio 4 Having NACA 65A006 Airfoil Section. NACA RM L53C23, 1953.

304. Dunning, Robert W., and Ulmann, Edward F.: Aerodynamic Characteristics at Mach Number 4.04 of a Rectangular Wing of Aspect Ratio 1.33 Having a 6-Percent-Thick Circular-Arc Profile and a 30-Percent-Chord Full-Span Trailing-Edge Flap. NACA RM L53D03, 1953.

305. Czarnecki, K. R., and Lord, Douglas R.: Preliminary Investigation of the Effect of Fences and Balancing Tabs on the Hinge-Moment Characteristics of a Tip Control on a 60° Delta Wing at Mach Number 1.61. NACA RM L53D14, 1953.

306. Czarnecki, K. R., and Lord, Douglas R.: Load Distributions Associated With Controls at Supersonic Speeds. NACA RM L53D15a, 1953.

307. Vogler, Raymond D.: Wind-Tunnel Investigation at High Subsonic Speeds of a Spoiler-Slot-Deflector Combination on an NACA 65A006 Wing with Quarter-Chord Line Swept Back 32.6°. NACA RM L53D17, 1953.

308. Johnson, Harold I.: Measurements of Aerodynamic Characteristics at Transonic Speeds of an Unswept and Untapered NACA 65-009 Airfoil Model of Aspect Ratio 3 with 1/4-Chord Plain Flap by the NACA Wing-Flow Method. NACA RM L53D21, 1953.

309. Hammond, Alexander D., and West, F. E., Jr.: Loads Due to Flaps and Spoilers on Sweptback Wings at Subsonic and Transonic Speeds. NACA RM L53D29a, 1953.

3625

CD-14

310. Drake, Hubert M., and McKay, John B.: Aileron and Elevator Hinge Moments of the Bell X-1 Airplane Measured in Trasonic Flight. NACA RM L53E04, 1953.

311. Turner, Thomas R.: Effects of Rate of Flap Deflection on Flap Hinge Moment and Wing Lift Through the Mach Number Range From 0.32 to 0.87. NACA RM L53E11, 1953.

312. Croom, Delwin R., and Wiley, Harleth G.: Investigation at Transonic Speeds of the Hinge-Moment and Lift-Effectiveness Characteristics of a Single Flap and a Tandem Flap on a 60° Delta Wing. NACA RM L53E28a, 1953.

313. Reed, Verlin D., and Smith, Donald W.: The Lateral Control Characteristics of Constant-Percent-Chord Trailing-Edge Elevons on a Pointed Wing of Aspect Ratio 2 at Mach Numbers up to 0.95. NACA RM A53F03, 1953.

314. Gottlieb, Stanley M.: Low-Speed Investigation of the Lateral Control Characteristics of Three Tip Ailerons on a 60° Triangular Wing. NACA RM L53F16a, 1953.

315. Drake, William C.: Lift, Drag, and Hinge Moments at Supersonic Speeds of an All-Movable Triangular Wing and Body Comination. NACA RM A53F22, 1953.

316. West, Franklin E., Jr., Solomon, William and Brummal, Edward M.: Investigation of Spoiler Ailerons with and without a Gap Behind the Spoiler on a 45° Sweptback Wing-Fuselage Combination at Mach Numbers From 0.60 to 1.03. NACA RM L53G07a, 1953.

317. Scallion, William I.: Low-Speed Investigation of the Aerodynamic, Control, and Hinge-Moment Characteristics in Sideslip of a Delta-Wing-Fuselage Model with Horn-Balance-Type Ailerons and with and without Nacelles. NACA RM L53G09b, 1953.

318. Humphreys, Milton D.: Transonic Aerodynamic Characteristics of an NACA 64A006 Airfoil Section with a 15-Percent-Chord Leading-Edge Flap. NACA RM L53G23, 1953.

319. Goin, Kennith L., and Palmer, William E.: Subsonic and Supersonic Hinge-Moment and Effectiveness Characteristics of an Unbalanced Lateral Control Having Low Theoretical Hinge Moments at Supersonic Speeds. NACA RM L53G31a, 1953.

320. Watson, James M.: The Aerodynamic Characteristics at Transonic Speeds of an All-Movable, Tapered, 45° Sweptback, Aspect-Ratio-4 Tail Deflected about a Skewed Hinge Axis and Equipped with an Inset Unbalancing Tab. NACA RM L53H13, 1953.

321. Strass, H. Kurt and Stephens, Emily W.: An Engineering Method for the Determination of Aeroelastic Effects Upon the Rolling Effectiveness of Ailerons on Swept Wings. NACA RM L53H14, 1954.

322. Moseley, William C., Jr., and Taylor, Robert T.: Low-Speed Static Stability and Control Characteristics of a 1/4-Scale Model of the Bell X-1 Airplane Equipped with a 4-Percent-Thick, Aspect-Ratio-4, Unswept Wing. NACA RM L53H27, 1953.

323. Martz, C. William, and Goslee, John W.: Rocket-Model Investigation to Determine the Hinge-Moment and Normal-Force Properties of a Full-Span, Constant-Chord, Partially Balanced Trailing-Edge Control on a 60° Clipped Delta Wing Between Mach Numbers of 0.5 and 1.26. NACA RM L53I04, 1953.

324. Lowry, John G., and Turner, Thomas R.: Low-Speed Wind-Tunnel Investigation of a Jet Control on a 35° Swept Wing. NACA RM L53I09a, 1953.

325. Lord, Douglas R., and Czarnecki, K. R.: Recent Information on Flap and Tip Controls. NACA RM L53I17a, 1953.

326. English, Roland D.: Some Effects of Aeroelasticity and Sweepback on the Rolling Effectiveness and Drag of a 1/11-Scale Model of the Bell X-5 Airplane Wing at Mach Numbers from 0.6 to 1.5. NACA RM L53I18b, 1953.

327. Cleary, Joseph W., and Boddy, Lee Elmer: Wind Tunnel Investigation of a 45° Sweptback Wing Having a Symmetrical Root and a Highly Cambered Tip, Including the Effects of Fences and Lateral Controls. NACA RM A53I21, 1953.

328. Mueller, James N.: An Investigation at Mach Number 2.40 of Flap-Type Controls Equipped with Overhang Nose Balances. NACA RM L53I21, 1953.

329. Curfman, Howard J., Jr., Strass, H. Kurt, and Crane, Harold L.: Investigations Toward Simplification of Missile Control Systems. NACA RM L53I21a, 1953.

330. Lowry, John G.: Data on Spoiler-Type Ailerons. NACA RM L53I24a, 1953.

331. English, Roland D.: Some Effects of Leading-Edge Roughness on the Aileron Effectiveness and Drag of a Thin Rectangular Wing Employing a Full-Span Plain Aileron at Mach Numbers From 0.6 to 1.5. NACA RM L53I25, 1953.

3625

CD-14 back

332. Arbic, Richard G., and Gillespie, Warren, Jr.: Summary of Rocket-Model Tests at Zero Lift of an Arrow-Wing Missile Configuration From Mach Numbers of 0.9 to 1.8. NACA RM L53J02, 1954.

333. Wiley, Harleth G., and Taylor, Robert T.: Investigation at Transonic Speeds of the Lateral-Control and Hinge-Moment Characteristics of a Flap-Type Spoiler Aileron on a 60° Delta Wing. NACA RM L53J05, 1954.

334. Johnson, Harold S.: Wind-Tunnel Investigation at High Subsonic Speeds of the Effect of Spoiler Profile on the Lateral Control Characteristics of a Wing-Fuselage Combination with Quarter-Chord Line Swept Back 32.6° and NACA 65A006 Airfoil Section. NACA RM L53J05a, 1953.

335. Morris, Odell A.: Control Hinge-Moment and Effectiveness Characteristics of Several Interchangeable Tip Controls on a 60° Delta Wing at Mach Numbers of 1.41, 1.62, and 1.96. NACA RM L53J08a, 1953.

336. Vogler, Raymond D.: Wind-Tunnel Investigation at Transonic Speeds of a Spoiler-Slot-Deflector Combination on an Unswept NACA 65A006 Wing. NACA RM L53J21, 1953.

337. Spearman, M. Leroy: Effect of Large Deflections of a Canard Control and Deflections of a Wing-Tip Control on the Static-Stability and Induced-Roll Characteristics of a Cruciform Canard Missile at a Mach Number of 2.01. NACA RM L53K03, 1953.

338. Hammond, Alexander D., and Graven, Jean C., Jr.: The Twisting Effect at Transonic Speeds of Spoiler Ailerons on a 45° Sweptback, Aspect-Ratio-4, Tapered Wing. NACA RM L53K03a, 1954.

339. Ball, Louis H.: Investigation of a Trailing-Edge Paddle-Control Surface on a Triangular Wing of Aspect Ratio 2 at Subsonic and Supersonic Speeds. NACA RM A53K20, 1954.

340. Church, James D.: Flight Investigation of the Rolling Effectiveness of Fingered Semaphore Spoilers on a Tapered 45° Sweptback Wing Between Mach Numbers 0.6 and 1.3. NACA RM L53K20, 1954.

341. Wiley, Harleth G., and Hayes, William C., Jr.: Wind-Tunnel Investigations at Low and Transonic Speeds of the Feasibility of Self-Actuating Spoilers as a Lateral-Control Device for a Missile. NACA RM L53K27, 1954.

3625

342. Strass, H. Kurt: Summary of Some Rocket-Model Investigations of Effects of Wing Aspect Ratio and Thickness on Aileron Rolling Effectiveness Including Some Effects of Spanwise Aileron Location for Sweptback Wings With Aspect Ratio of 8.0. NACA RM L53L11, 1954.

343. Schult, Eugene D., and Fields, E. M.: Free-Flight Measurements of the Rolling Effectiveness and Drag of Trailing-Edge Spoilers on a Tapered Sweptback Wing at Mach Numbers Between 0.6 and 1.4. NACA RM L53L14a, 1954.

344. Lord, Douglas R., and Czarnecki, K. R.: Aerodynamic Characteristics of a Full-Span Trailing-Edge Control on a 60° Delta Wing With and Without a Spoiler at Mach Number 1.61. NACA RM L53L17, 1954.

345. Moseley, William C., Jr., and Taylor, Robert T.: Low-Speed Chordwise Pressure Distributions Near the Midspan Station of the Slotted Flap and Aileron of a 1/4-Scale Model of the Bell X-1 Airplane With a 4-Percent-Thick, Aspect-Ratio-4, Unswept Wing. NACA RM L53L18, 1954.

346. Mayer, John P., Hammer, Harold A., and Huss, Carl R.: A Study of the Use of Controls and the Resulting Airplane Response During Service Training Operations of Four Jet Fighter Airplanes. NACA RM L53L28, 1954.

347. Stivers, Louis S., Jr.: The Effectiveness at High Subsonic Mach Numbers of a 20-Percent-Chord Plain Trailing-Edge Flap on the NACA 65-210 Airfoil Section. NACA TN 3127, 1954.

348. Hemenover, Albert D., and Graham, Donald J.: Influence of Airfoil Trailing-Edge Angle and Trailing-Edge-Thickness Variation on the Effectiveness of a Plain Flap at High Subsonic Mach Numbers. NACA TN 3174, 1954.

349. Hammond, Alexander D., and Keffer, Barbara M.: Chordwise Pressures and Section Force and Moment Coefficients at High Subsonic Speeds Near Midspan of a Tapered 35° Sweptback Wing With a Flap-Type Control and an Attached Tab. NACA RM L54A22, 1954.

350. Fink, Marvin P., and Cocke, Bennie W.: A Low-Speed Investigation of the Aerodynamic, Control, and Hinge-Moment Characteristics of Two Types of Controls and Balancing Tabs on a Large-Scale Thin Delta-Wing--Fuselage Model. NACA RM L54B03, 1954.

351. Thompson, Robert F.: Hinge-Moment, Lift, and Pitching-Moment Characteristics of a Flap-Type Control Surface Having Various Hinge-Line Locations on a 4-Percent-Thick 60° Delta Wing. Transonic-Bump Method. NACA RM L54B08, 1954.

352. Whittle, Edward F., Jr., and Lipson, Stanley: Effect on the Low-Speed Aerodynamic Characteristics of a 49° Sweptback Wing Having an Aspect Ratio of 3.78 of Blowing Air over the Trailing-Edge Flap and Aileron. NACA RM L54C05, 1954.

353. Church, James D.: Rocket-Powered-Model Investigation of the Hinge-Moment and Normal-Force Characteristics of a Half-Diamond Tip Control on a 60° Sweptback Diamond Wing Between Mach Numbers of 0.5 and 1.3. NACA RM L54C10, 1954.

354. Hallissy, Joseph M., Jr., West, F. E., Jr., and Liner, Geroge: Effects of Spoiler Ailerons on the Aerodynamic Load Distribution over a 45° Sweptback Wing at Mach Numbers from 0.60 to 1.03. NACA RM L54C17a, 1954.

355. Naeseth, Rodger L., Croom, Delwin R., and McKee, John W.: Lateral Control Characteristics of Two Structurally Similar Flexible Wings with 45° Sweep: A Sweptback Wing and a Wing with M Plan Form. NACA RM L54C19, 1954.

356. Sadoff, Melvin, Matteson, Frederick H., and Van Dyke, Rudolph D., Jr.: The Effect of Blunt-Trailing-Edge Modifications on the High-Speed Stability and Control Characteristics of a Swept-Wing Fighter Airplane. NACA RM A54C31, 1954.

357. Wiley, Harleth G.: A Wind-Tunnel Investigation at High Subsonic Speeds of the Lateral Control Characteristics of Various Plain Spoiler Configurations on a 3-Percent-Thick 60° Delta Wing. NACA RM L54D01, 1954.

358. Henderson, James H.: Effect at Transonic Speeds of Inboard Spoilers on the Static Longitudinal Stability Characteristics of a 45° Sweptback Wing-Body Combination Having a Leading-Edge Chord-Extension. NACA RM L54D13, 1954.

359. Lord, Douglas R., and Czarnecki, K. R.: Aerodynamic Characteristics of Several Flap-Type Trailing-Edge Controls on a Trapezoidal Wing at Mach Numbers of 1.61 and 2.01. NACA RM L54D19, 1954.

360. English, Roland D.: Flight Investigation of an Aileron and a Spoiler on a Wing of the X-3 Airplane Plan Form at Mach Numbers from 0.5 to 1.6. NACA RM L54D26a, 1954.

361. Lord, Douglas R., and Czarnecki, K. R.: Aerodynamic Characteristics of Several Tip Controls on a 60° Delta Wing at a Mach Number of 1.61. NACA RM L54E25, 1954.

3625

362. Hammond, Alexander D., and Hayes, William C., Jr.: Pressure Distributions on Plug- and Semaphore-Type Spoiler Ailerons on a 35° Sweptback Wing of Aspect Ratio 4, Taper Ratio 0.6, and NACA 65A006 Airfoil Section at High Subsonic Speeds. NACA RM L54F08, 1954.

363. Hamilton, Clyde V., and Driver, Cornelius: An Investigation of a Supersonic Aircraft Configuration Having a Tapered Wing with Circular-Arc Sections and 40° Sweepback. Stability and Control Characteristics at a Mach Number of 1.61 of the Complete Configuration Equipped with Spoilers. NACA RM L54F15, 1954.

364. Hedgepeth, John M., and Kell, Robert J.: Comparison Between Theoretical and Experimental Rates of Roll of Two Models with Flexible Rectangular Wings at Supersonic Speeds. NACA RM L54F23, 1954.

365. English, Roland D.: Some Effects of External Wing Tip Stores on the Rolling Effectiveness and Drag of Plain and Half-Delta Tip Ailerons on a 4-Percent-Thick, Tapered, Unswept Wing. NACA RM L54F29a, 1954.

366. Guy, Lawrence D.: Effects of Overhang Balance on the Hinge-Moment and Effectiveness Characteristics of an Unswept Trailing-Edge Control on a 60° Delta Wing at Transonic and Supersonic Speeds. NACA RM L54G12a, 1954.

367. Strass, H. Kurt and Tucker, Warren A.: Some Effects of Aileron Span, Aileron Chord, and Wing Twist on Rolling Effectiveness as Determined by Rocket-Powered Model Tests and Theoretical Estimates. NACA RM L54G13, 1954.

368. Sadoff, Melvin and Crossfield, A. Scott: A Flight Evaluation of the Stability and Control of the X-4 Swept-Wing Semitailless Airplane. NACA RM H54G16, 1954.

369. McKay, John B.: Rolling Performance of the Republic YF-84F Airplane as Measured in Flight. NACA RM H54G20a, 1954.

370. Hewes, Donald E.: Measurement of Static Stability and Damping Derivatives of a 60° Delta-Wing Model for Angles of Attack of 0° to 90°. NACA RM L54G22a, 1954.

371. Spearman, M. Leroy, and Palazzo, Edward B.: An Investigation of a Supersonic Configuration Having a Tapered Wing with Circular-Arc Sections and 40° Sweepback - Static Longitudinal and Lateral Stability and Control Characteristics at a Mach Number of 1.89. NACA RM L54G26a, 1954.

3625

372. Scallion, William I.: The Effect of Ground on the Low-Speed Aerodynamic Control and Control Hinge Moment Characteristics of a Delta-Wing Fuselage Model with Trailing-Edge Controls. NACA RM L54H03, 1954.

373. Fetterman, David E., and Ridyard, Herbert W.: The Effect of a Change in Airfoil Section on the Hinge-Moment Characteristics of a Half-Delta Tip Control with a 60° Sweep Angle at a Mach Number of 6.9. NACA RM L54H16a, 1954.

374. Schult, Eugene D.: Free-Flight Measurements of the Rolling Effectiveness and Operating Characteristics of a Bellows-Actuated Split-Flap Aileron on a 60° Delta Wing at Mach Numbers Between 0.8 and 1.8. NACA RM L54H17, 1954.

375. Franks, Ralph W.: Tests in the Ames 40- by 80-Foot Wind Tunnel of the Aerodynamic Characteristics of Airplane Models with Plain Spoiler Ailerons. NACA RM A54H26, 1954.

376. Thompson, Robert F., and Taylor, Robert T.: Effect of a Wing Leading-Edge Flap and Chord-Extension on the High Subsonic Control Characteristics of a Spoiler-Slot-Deflector Control Located at Two Spanwise Positions. NACA RM L54I09, 1954.

377. Healy, Frederick M., and Klinar, Walter J.: Comparison of Effects of Ailerons and Combinations of Spoiler-Slot-Deflector Arrangements on Spin Recovery of Sweptback-Wing Model Having Mass Distributed Along the Fuselage. NACA RM L54I14, 1954.

378. Johnson, Clinton T., and Kuhl, Albert E.: Flight Measurements of Elevon Hinge Moments on the XF-92A Delta-Wing Airplane. NACA RM H54J25a, 1954.

379. Vogler, Raymond D.: Wind-Tunnel Investigation at Transonic Speeds of the Lift and Hinge-Moment Characteristics of a Flap with Attached Balancing Tab on a 45° Sweptback Wing. NACA RM L54J28a, 1954.

380. Saltzman, Edwin J.: The Effect of Blunt-Trailing-Edge Elevons on the Longitudinal and Lateral Handling Qualities of the X-4 Semitailless Airplane. NACA RM H54K03, 1954.

381. Guy, Lawrence D. and Brown, Hoyt V.: Effects of an Inset Tab on the Hinge-Moment and Effectiveness Characteristics of an Unswept Trailing-Edge Control on a 60° Delta Wing at Mach Numbers from 0.75 to 1.96. NACA RM L54K16a, 1954.

3625

382. Tinling, Bruce E. and Karpen, A. V.: The Effects of Trailing-Edge Flaps on the Subsonic Aerodynamic Characteristics of an Airplane Model Having a Triangular Wing of Aspect Ratio 3. NACA RM A54L07, 1955.

383. English, Roland D.: Free-Flight Investigation to Determine Some Effects of Tail Damping and Wing-Tail Interference on The Rolling Effectiveness of Inboard and Outboard Ailerons on an Untapered Sweptback Wing. NACA RM L54L17a, 1954.

384. Sisk, Thomas R. and Muhleman, Duane O.: Lateral Stability and Control Characteristics of the Convair XF-92A Delta-Wing Airplane as Measured in Flight. NACA RM H55A17, 1955.

NACA-Langley - 3-24-55 - 350