NACA TN 3460

NATIONAL ADVISORY COMMITTEE FOR AERONAUTICS

TECHNICAL NOTE 3460

TABLES OF COEFFICIENTS FOR THE ANALYSIS OF STRESSES ABOUT CUTOUTS IN CIRCULAR SEMIMONOCOQUE CYLINDERS WITH FLEXIBLE RINGS

By Harvey G. McComb, Jr., and Emmet F. Low, Jr.

Langley Aeronautical Laboratory
Langley Field, Va.

Washington
July 1955

3 1176 01433 4420

NATIONAL ADVISORY COMMITTEE FOR AERONAUTICS

TECHNICAL NOTE 3460

TABLES OF COEFFICIENTS FOR THE ANALYSIS OF STRESSES ABOUT CUTOUTS IN CIRCULAR SEMIMONOCOQUE CYLINDERS WITH FLEXIBLE RINGS

By Harvey G. McComb, Jr., and Emmet F. Low, Jr.

SUMMARY

Tables of coefficients are presented which facilitate the stress analysis of circular semimonocoque cylinders with cutouts by the method published in NACA TN 3200. When the values of two simple structural parameters are known, use of these coefficients enables shear flows and stringer loads in the neighborhood of a cutout to be calculated. The effect of bending flexibility of the rings in their planes has been taken into consideration in the computation of the coefficients. Included as a limiting case are the tables from NACA TN 3200 which were computed on the assumption that there is no distortion of the rings in their planes.

INTRODUCTION

A method of stress analysis for the calculation of shear flows and stringer loads in the neighborhood of cutouts in circular semimonocoque cylinders is presented in reference 1. In this method of analysis it is assumed that the stress distribution in the cylinder without a cutout is known. The method involves the superposition of stress distributions due to certain perturbation loads on the structure without a cutout in such a way as to produce the effect of a cutout. The purpose of this report is to present tables of coefficients which facilitate the computations involved in applying the method of analysis (ref. 1). The coefficients represent the stress distribution (shear flows and stringer loads) in a circular semimonocoque cylinder which has no cutout and is loaded by each of three unit perturbation loads. The coefficients were calculated from formulas derived in reference 2, in which the effect of ring flexibility was taken into account. The calculations were performed on an IBM Card-Programmed Electronic Calculator at the Langley Aeronautical Laboratory. The use of the tables in conjunction with the method presented in reference 1 enables the stress analyst to compute stringer loads and shear flows in the neighborhood of a cutout in a circular semimonocoque cylinder.

SYMBOLS

A effective cross-sectional area of stringer

$B = \frac{E}{G}\frac{A}{bt}\left(\frac{R}{L}\right)^2$

b arc distance between stringers

$C = \frac{AR^6}{IL^3b}$

E Young's modulus of elasticity

G shear modulus of elasticity

I moment of inertia of ring cross section

i longitudinal index, indicating location of rings and bays

j circumferential index, indicating location of stringers and panel rows

L distance between rings

m total number of stringers in cylinder

P external concentrated force in longitudinal direction applied to a stringer at its intersection with a ring

p_{ij} load in stringer j at ring i

Q external shearing force per unit length applied about a shear panel

q_{ij} shear flow in shear panel (i,j)

R radius to middle surface of sheet

S external force in longitudinal direction uniformly distributed along that portion of a stringer which lies between adjacent rings

t thickness of sheet

DESCRIPTION OF STRUCTURE AND BASIC ASSUMPTIONS

A typical structure of the type which can be analyzed by the method of reference 1 is shown in figure 1. It consists of a thin-walled circular cylinder stiffened by stringers in the longitudinal direction and by rings in the circumferential direction. The stringers and rings divide the cylinder wall or skin into rectangular panels which are called shear panels. A cutout, located in a bay far from the ends of the cylinder, may remove an arbitrary number of shear panels and interrupt the corresponding stringers.

In the development of the method, the following basic assumptions were made:

(1) The cylinder is long in comparison with the length of the cutout and has uniform and equally spaced rings and stringers.

(2) The stringers support axial loads only. That part of the sheet area which is considered to resist axial loads is added to the stringer area, and then the sheet is considered to support only shear stresses which are constant within each shear panel.

(3) The rings have finite bending stiffness in their own planes, but they do not restrain longitudinal displacements of the stringers. The bending of the rings is inextensional.

(4) The difference between the radius to the middle surface of the sheet and the radius to the neutral axis of a ring is negligible.

(5) The structure is elastic, and no buckling occurs.

This method of analysis can be used with any loading for which the stress distribution in the structure without the cutout is known. Some of these loadings are illustrated in figure 1.

TABLES OF COEFFICIENTS

The tables of coefficients presented (tables 1 to 30) are designed to implement the application of the method of analysis of reference 1. These coefficients give stringer loads and shear flows in the neighborhood of three unit perturbation loads. The coefficients can be used to set up the system of algebraic equations from which the magnitudes of the perturbation loads are determined and also to calculate shear flows and stringer loads after the magnitudes of the perturbation loads are found.

Description of Perturbation Loads

The three perturbation loads are illustrated in figure 2. The concentrated perturbation load illustrated in figure 2(a) consists of a concentrated force P acting in the longitudinal direction and applied to one stringer of the shell at its intersection with a ring. The distributed perturbation load illustrated in figure 2(b) consists of a force S acting in the longitudinal direction and uniformly distributed along the portion of one stringer which lies between two adjacent rings. The shear perturbation load illustrated in figure 2(c) consists of uniformly distributed forces per unit length Q applied along the stringers and rings which border one shear panel of the shell, the forces acting in such a manner as to cause pure shear in that panel. The unit of measurement for the concentrated and distributed perturbation loads is that of force, whereas the unit of measurement for the shear perturbation load is that of force per unit length.

The index system used to designate rings, stringers, bays, and panel rows is shown in figure 3. The index i designates rings and bays, and j designates stringers and panel rows. Note that the intersection of ring i and stringer j occurs at the lower left-hand corner of the shear panel (i,j).

Parameters

The tables of coefficients were calculated from formulas which were developed in reference 2 and compiled in appendix A of that reference. For each perturbation load, the coefficients depend on the number of stringers in the cylinder and on two dimensionless parameters B and C defined as:

$$B = \frac{E}{G}\frac{A}{bt}\left(\frac{R}{L}\right)^2 \qquad C = \frac{AR^6}{IL^3b}$$

The parameter B is proportional to the ratio of the extensional stiffness of the stringers to the shear stiffness of the sheet. The parameter C introduces the effect of ring flexibility. For very stiff rings, that is, rings which approach complete rigidity in bending in their own plane, C approaches zero. As the rings become more flexible, C increases in magnitude. Similar parameters were found by Kempner and Duberg (ref. 3) to be significant in the analysis of reinforced circular cylinders under lateral loads. (The parameters B and C in this report correspond respectively to the symbols B and A used in ref. 3.)

The tables were computed for a cylinder having 36 stringers; however, their application is not limited to cylinders with 36 stringers. In general, the total stringer area can simply be redistributed into 36 fictitious stringers without changing the values of B and C. Then the tables give the load which is carried by all of the direct-stress-carrying material up to 5° on either side of a fictitious stringer and also give the average shear flow in the shear panel between fictitious stringers.

Scope and Description of Tables

Tables are presented for six values of C $\left(0,\ 2 \times 10^2,\ 2 \times 10^3,\ 2 \times 10^4,\ 2 \times 10^5,\ \text{and}\ 2 \times 10^6\right)$ and for five values of B (8, 30, 100, 300, and 1,000). The tables computed for a cylinder with rigid rings (C = 0) were presented in reference 1 and are included here for completeness. The table corresponding to any given pair of values of B and C contains the shear flows and stringer loads due to each of the unit perturbation loads. Part (a) of each table contains values of p_{ij} and $q_{ij}L$ due to a concentrated perturbation load of unit magnitude (P = 1 unit of force) on stringer $j = 0$ at ring $i = 0$. Part (b) contains values of p_{ij} and $q_{ij}L$ due to a distributed perturbation load of unit magnitude (S = 1 unit of force) on stringer $j = 0$ between rings $i = 0$ and $i = 1$. Part (c) contains values of p_{ij}/L and q_{ij} due to a shear perturbation load of unit magnitude (Q = 1 unit of force per unit length) about the shear panel (0,0). The perturbation loads are shown in figure 2 in the positive sense. Stringer loads are taken as positive in tension, and shear flow is positive when an element of the sheet is loaded by shears which act in the positive sense of the shear perturbation load.

CONCLUDING REMARKS

Tables of coefficients for the stress analysis of circular semimonocoque cylinders with cutouts are presented. These tables are calculated from formulas developed in NACA TN 3199 and include the effect of the flexibility of the rings in their own planes. A detailed

explanation of the application of the tables in the analysis of stresses about a cutout in a circular semimonocoque cylinder was published in NACA TN 3200.

Langley Aeronautical Laboratory,
National Advisory Committee for Aeronautics,
Langley Field, Va., March 2, 1955.

REFERENCES

1. McComb, Harvey G., Jr.: Stress Analysis of Circular Semimonocoque Cylinders With Cutouts by a Perturbation Load Technique. NACA TN 3200, 1954.

2. McComb, Harvey G., Jr.: Stress Distributions Caused by Three Types of Loading on a Circular Semimonocoque Cylinder With Flexible Rings. NACA TN 3199, 1954.

3. Kempner, Joseph, and Duberg, John E.: Charts for Stress Analysis of Reinforced Circular Cylinders Under Lateral Loads. NACA TN 1310, 1947.

TABLE 1.- LOAD DISTRIBUTION DUE TO A UNIT PERTURBATION LOAD

[B = 8; C = 0; m = 36]

(a) Concentrated perturbation load on stringer j = 0 at ring i = 0

j	Stringer load, p_{ij}, at station -						
	i = 0	i = 1	i = 2	i = 3	i = 4	i = 5	i = 6
0	0.5000	0.0476	0.0565	0.0459	0.0437	0.0426	0.0421
1	0	.0895	.0490	.0457	.0430	.0421	.0416
2	0	.0511	.0475	.0429	.0414	.0406	.0403
3	0	.0330	.0402	.0394	.0387	.0383	.0381
4	0	.0232	.0329	.0349	.0352	.0352	.0352
5	0	.0172	.0266	.0300	.0311	.0315	.0316
6	0	.0130	.0212	.0250	.0266	.0273	.0276
7	0	.0097	.0165	.0202	.0219	.0227	.0231
8	0	.0070	.0123	.0154	.0171	.0180	.0184
9	0	.0047	.0084	.0110	.0124	.0131	.0135
10	0	.0026	.0050	.0067	.0078	.0084	.0087
11	0	.0007	.0018	.0028	.0035	.0039	.0041
12	0	-.0010	-.0010	-.0008	-.0005	-.0003	-.0002
13	0	-.0024	-.0035	-.0039	-.0040	-.0040	-.0040
14	0	-.0036	-.0056	-.0065	-.0070	-.0072	-.0073
15	0	-.0046	-.0072	-.0086	-.0094	-.0098	-.0100
16	0	-.0053	-.0084	-.0102	-.0112	-.0117	-.0120
17	0	-.0057	-.0092	-.0111	-.0122	-.0128	-.0132
18	0	-.0059	-.0094	-.0115	-.0126	-.0132	-.0136

j	Shear flow, $q_{ij}L$, at station -					
	i = 0	i = 1	i = 2	i = 3	i = 4	i = 5
0	0.2262	-0.0044	0.0053	0.0011	0.0006	0.0002
1	.1368	.0360	.0087	.0038	.0015	.0007
2	.0856	.0396	.0133	.0053	.0023	.0010
3	.0527	.0324	.0141	.0059	.0026	.0012
4	.0294	.0227	.0121	.0056	.0026	.0012
5	.0122	.0133	.0086	.0045	.0022	.0011
6	-.0007	.0052	.0047	.0029	.0016	.0008
7	-.0105	-.0016	.0010	.0012	.0008	.0004
8	-.0175	-.0068	-.0021	-.0005	.0000	.0000
9	-.0222	-.0106	-.0046	-.0019	-.0008	-.0003
10	-.0248	-.0129	-.0064	-.0030	-.0014	-.0006
11	-.0255	-.0140	-.0073	-.0037	-.0018	-.0009
12	-.0246	-.0140	-.0076	-.0040	-.0020	-.0010
13	-.0222	-.0129	-.0072	-.0039	-.0020	-.0010
14	-.0186	-.0110	-.0062	-.0034	-.0018	-.0009
15	-.0140	-.0083	-.0048	-.0026	-.0014	-.0007
16	-.0087	-.0052	-.0030	-.0017	-.0009	-.0005
17	-.0029	-.0018	-.0010	-.0006	-.0003	-.0002

TABLE 1.- LOAD DISTRIBUTION DUE TO A UNIT PERTURBATION LOAD - Continued

[B = 8; C = 0; m = 36]

(b) Distributed perturbation load on stringer $j = 0$ between rings $i = 0$ and $i = 1$

j	Stringer load, p_{ij}, at station -					
	i = 1	i = 2	i = 3	i = 4	i = 5	i = 6
0	0.1924	0.0567	0.0499	0.0447	0.0430	0.0423
1	.0727	.0629	.0475	.0441	.0425	.0418
2	.0340	.0499	.0447	.0421	.0410	.0404
3	.0195	.0379	.0398	.0390	.0385	.0382
4	.0128	.0291	.0341	.0351	.0352	.0352
5	.0092	.0226	.0286	.0307	.0313	.0316
6	.0068	.0175	.0234	.0260	.0270	.0274
7	.0051	.0134	.0185	.0211	.0224	.0229
8	.0036	.0098	.0140	.0164	.0176	.0182
9	.0024	.0067	.0098	.0117	.0128	.0134
10	.0013	.0038	.0059	.0073	.0081	.0086
11	.0003	.0013	.0023	.0032	.0037	.0040
12	-.0006	-.0010	-.0009	-.0006	-.0004	-.0002
13	-.0013	-.0030	-.0037	-.0040	-.0040	-.0040
14	-.0020	-.0047	-.0061	-.0068	-.0071	-.0073
15	-.0025	-.0060	-.0080	-.0091	-.0096	-.0099
16	-.0029	-.0070	-.0094	-.0107	-.0114	-.0118
17	-.0031	-.0076	-.0102	-.0117	-.0126	-.0130
18	-.0032	-.0078	-.0105	-.0121	-.0130	-.0134

j	Shear flow, $q_{ij}L$, at station -					
	i = 0	i = 1	i = 2	i = 3	i = 4	i = 5
0	0.3077	0.0679	0.0034	0.0026	0.0008	0.0004
1	.1623	.0776	.0188	.0060	.0025	.0010
2	.0942	.0617	.0240	.0086	.0036	.0016
3	.0553	.0433	.0221	.0094	.0041	.0018
4	.0296	.0271	.0171	.0085	.0039	.0018
5	.0112	.0137	.0110	.0064	.0033	.0016
6	-.0025	.0030	.0052	.0038	.0022	.0012
7	-.0127	-.0053	.0001	.0012	.0010	.0006
8	-.0200	-.0115	-.0041	-.0012	-.0002	.0000
9	-.0248	-.0158	-.0072	-.0031	-.0013	-.0005
10	-.0273	-.0183	-.0093	-.0045	-.0021	-.0010
11	-.0279	-.0193	-.0104	-.0053	-.0027	-.0013
12	-.0268	-.0189	-.0105	-.0056	-.0029	-.0015
13	-.0240	-.0172	-.0098	-.0054	-.0028	-.0015
14	-.0201	-.0145	-.0084	-.0047	-.0025	-.0013
15	-.0151	-.0109	-.0064	-.0036	-.0020	-.0010
16	-.0094	-.0068	-.0040	-.0023	-.0012	-.0007
17	-.0032	-.0023	-.0014	-.0008	-.0004	-.0002

TABLE 1.- LOAD DISTRIBUTION DUE TO A UNIT PERTURBATION LOAD - Concluded

[B = 8; C = 0; m = 36]

(c) Shear perturbation load about shear panel (0,0)

j	Stringer load, p_{ij}/L, at station -					
	i = 1	i = 2	i = 3	i = 4	i = 5	i = 6
1	-0.1192	0.0067	-0.0019	-0.0001	-0.0001	0.0000
2	-.0374	-.0118	-.0016	-.0008	-.0003	-.0001
3	-.0125	-.0100	-.0029	-.0010	-.0004	-.0002
4	-.0038	-.0061	-.0029	-.0011	-.0005	-.0002
5	-.0002	-.0031	-.0021	-.0010	-.0005	-.0002
6	.0016	-.0011	-.0012	-.0007	-.0004	-.0002
7	.0026	.0003	-.0005	-.0004	-.0002	-.0001
8	.0032	.0011	.0002	-.0001	-.0001	-.0001
9	.0036	.0017	.0006	.0002	.0000	.0000
10	.0037	.0020	.0009	.0004	.0002	.0001
11	.0037	.0021	.0011	.0005	.0002	.0001
12	.0035	.0021	.0012	.0006	.0003	.0002
13	.0032	.0020	.0011	.0006	.0003	.0002
14	.0028	.0018	.0010	.0006	.0003	.0002
15	.0023	.0014	.0009	.0005	.0003	.0002
16	.0017	.0011	.0007	.0004	.0002	.0001
17	.0010	.0007	.0004	.0002	.0001	.0001
18	.0004	.0002	.0001	.0001	.0000	.0000

j	Shear flow, q_{ij}, at station -					
	i = 0	i = 1	i = 2	i = 3	i = 4	i = 5
0	0.6986	0.1357	0.0068	0.0052	0.0016	0.0008
1	-.0629	.0097	.0154	.0034	.0016	.0007
2	.0119	-.0159	.0052	.0026	.0011	.0005
3	.0370	-.0184	-.0019	.0008	.0005	.0003
4	.0446	-.0162	-.0051	-.0010	-.0001	.0000
5	.0451	-.0134	-.0060	-.0021	-.0007	-.0002
6	.0419	-.0107	-.0058	-.0026	-.0010	-.0004
7	.0366	-.0083	-.0051	-.0026	-.0012	-.0006
8	.0302	-.0062	-.0042	-.0024	-.0012	-.0006
9	.0230	-.0043	-.0031	-.0019	-.0011	-.0006
10	.0156	-.0025	-.0021	-.0014	-.0008	-.0004
11	.0082	-.0010	-.0011	-.0008	-.0006	-.0003
12	.0012	.0004	-.0001	-.0003	-.0002	-.0002
13	-.0052	.0017	.0007	.0002	.0000	.0000
14	-.0108	.0027	.0014	.0007	.0003	.0002
15	-.0153	.0035	.0020	.0011	.0006	.0003
16	-.0187	.0041	.0024	.0013	.0007	.0004
17	-.0207	.0045	.0026	.0015	.0008	.0004
18	-.0214	.0046	.0027	.0016	.0009	.0005

TABLE 2.- LOAD DISTRIBUTION DUE TO A UNIT PERTURBATION LOAD

[B = 30; C = 0; m = 36]

(a) Concentrated perturbation load on stringer j = 0 at ring i = 0

j	Stringer load, p_{ij}, at station -						
	i = 0	i = 1	i = 2	i = 3	i = 4	i = 5	i = 6
0	0.5000	0.1518	0.0852	0.0636	0.0541	0.0491	0.0463
1	0	.0866	.0711	.0588	.0518	.0478	.0454
2	0	.0374	.0488	.0484	.0462	.0443	.0429
3	0	.0209	.0331	.0380	.0393	.0394	.0392
4	0	.0137	.0237	.0296	.0326	.0341	.0348
5	0	.0098	.0177	.0232	.0267	.0288	.0300
6	0	.0072	.0134	.0181	.0214	.0236	.0251
7	0	.0054	.0100	.0138	.0167	.0188	.0203
8	0	.0038	.0073	.0102	.0125	.0143	.0156
9	0	.0025	.0049	.0069	.0086	.0100	.0111
10	0	.0013	.0027	.0040	.0051	.0061	.0068
11	0	.0003	.0008	.0013	.0019	.0024	.0029
12	0	-.0006	-.0009	-.0010	-.0010	-.0009	-.0007
13	0	-.0014	-.0024	-.0031	-.0035	-.0037	-.0039
14	0	-.0021	-.0037	-.0048	-.0056	-.0062	-.0066
15	0	-.0027	-.0047	-.0062	-.0073	-.0081	-.0087
16	0	-.0030	-.0054	-.0072	-.0085	-.0095	-.0103
17	0	-.0033	-.0058	-.0078	-.0093	-.0104	-.0112
18	0	-.0034	-.0060	-.0080	-.0095	-.0107	-.0116

j	Shear flow, $q_{ij}L$, at station -					
	i = 0	i = 1	i = 2	i = 3	i = 4	i = 5
0	0.1741	0.0333	0.0108	0.0048	0.0025	0.0014
1	.0875	.0489	.0231	.0118	.0065	.0038
2	.0501	.0375	.0234	.0140	.0084	.0052
3	.0292	.0253	.0186	.0126	.0083	.0054
4	.0155	.0153	.0127	.0096	.0068	.0047
5	.0057	.0074	.0072	.0061	.0047	.0035
6	-.0016	.0012	.0025	.0028	.0025	.0021
7	-.0069	-.0034	-.0013	-.0001	.0004	.0006
8	-.0108	-.0069	-.0042	-.0025	-.0014	-.0007
9	-.0133	-.0092	-.0063	-.0042	-.0027	-.0018
10	-.0146	-.0106	-.0076	-.0053	-.0037	-.0025
11	-.0149	-.0111	-.0081	-.0059	-.0042	-.0030
12	-.0143	-.0108	-.0080	-.0059	-.0043	-.0031
13	-.0128	-.0098	-.0074	-.0055	-.0041	-.0030
14	-.0107	-.0082	-.0063	-.0047	-.0035	-.0026
15	-.0080	-.0062	-.0048	-.0036	-.0027	-.0020
16	-.0050	-.0039	-.0030	-.0023	-.0017	-.0013
17	-.0017	-.0013	-.0010	-.0008	-.0006	-.0004

TABLE 2.- LOAD DISTRIBUTION DUE TO A UNIT PERTURBATION LOAD - Continued

[B = 30; C = 0; m = 36]

(b) Distributed perturbation load on stringer j = 0 between rings i = 0 and i = 1

j	Stringer load, p_{ij}, at station -					
	i = 1	i = 2	i = 3	i = 4	i = 5	i = 6
0	0.2850	0.1124	0.0729	0.0583	0.0514	0.0476
1	.0603	.0789	.0644	.0550	.0496	.0465
2	.0214	.0447	.0489	.0473	.0452	.0435
3	.0111	.0278	.0360	.0388	.0394	.0393
4	.0071	.0191	.0270	.0313	.0334	.0345
5	.0050	.0139	.0206	.0251	.0278	.0294
6	.0037	.0104	.0159	.0198	.0226	.0244
7	.0027	.0078	.0120	.0154	.0178	.0196
8	.0019	.0056	.0088	.0114	.0134	.0150
9	.0013	.0037	.0059	.0078	.0094	.0106
10	.0007	.0020	.0034	.0046	.0056	.0065
11	.0001	.0005	.0010	.0016	.0022	.0027
12	-.0004	-.0008	-.0010	-.0010	-.0009	-.0008
13	-.0008	-.0020	-.0028	-.0033	-.0036	-.0038
14	-.0011	-.0029	-.0043	-.0052	-.0059	-.0064
15	-.0014	-.0037	-.0055	-.0068	-.0077	-.0084
16	-.0016	-.0043	-.0063	-.0079	-.0091	-.0099
17	-.0017	-.0046	-.0069	-.0086	-.0099	-.0108
18	-.0018	-.0047	-.0070	-.0088	-.0101	-.0112

j	Shear flow, $q_{ij}L$, at station -					
	i = 0	i = 1	i = 2	i = 3	i = 4	i = 5
0	0.2150	0.0863	0.0198	0.0073	0.0035	0.0019
1	.0944	.0678	.0343	.0167	.0088	.0050
2	.0516	.0444	.0301	.0183	.0109	.0066
3	.0294	.0277	.0220	.0155	.0103	.0067
4	.0152	.0156	.0141	.0111	.0082	.0057
5	.0052	.0067	.0074	.0067	.0054	.0041
6	-.0022	.0000	.0020	.0027	.0027	.0023
7	-.0076	-.0051	-.0023	-.0006	.0002	.0005
8	-.0115	-.0087	-.0055	-.0033	-.0019	-.0010
9	-.0140	-.0112	-.0077	-.0052	-.0034	-.0022
10	-.0154	-.0125	-.0090	-.0064	-.0045	-.0031
11	-.0156	-.0129	-.0095	-.0070	-.0050	-.0036
12	-.0149	-.0124	-.0094	-.0070	-.0051	-.0037
13	-.0134	-.0112	-.0085	-.0064	-.0048	-.0035
14	-.0112	-.0094	-.0072	-.0055	-.0041	-.0030
15	-.0084	-.0071	-.0054	-.0042	-.0031	-.0023
16	-.0052	-.0044	-.0034	-.0026	-.0020	-.0015
17	-.0018	-.0015	-.0012	-.0009	-.0007	-.0005

TABLE 2.- LOAD DISTRIBUTION DUE TO A UNIT PERTURBATION LOAD - Concluded

[B = 30; C = 0; m = 36]

(c) Shear perturbation load about shear panel (0,0)

j	Stringer-load, p_{ij}/L, at station -					
	i = 1	i = 2	i = 3	i = 4	i = 5	i = 6
1	-0.2242	-0.0331	-0.0081	-0.0029	-0.0013	-0.0007
2	-.0377	-.0329	-.0142	-.0064	-.0032	-.0017
3	-.0082	-.0148	-.0109	-.0064	-.0037	-.0022
4	-.0012	-.0060	-.0062	-.0047	-.0032	-.0021
5	.0013	-.0017	-.0029	-.0028	-.0022	-.0016
6	.0026	.0005	-.0008	-.0012	-.0012	-.0010
7	.0034	.0017	.0006	-.0001	-.0004	-.0004
8	.0039	.0025	.0014	.0007	.0003	.0000
9	.0042	.0029	.0020	.0012	.0008	.0004
10	.0042	.0031	.0023	.0016	.0011	.0007
11	.0041	.0032	.0024	.0017	.0012	.0009
12	.0039	.0031	.0023	.0018	.0013	.0009
13	.0036	.0028	.0022	.0017	.0013	.0009
14	.0031	.0024	.0019	.0015	.0011	.0009
15	.0025	.0020	.0016	.0012	.0010	.0007
16	.0018	.0015	.0012	.0009	.0007	.0006
17	.0011	.0009	.0007	.0006	.0004	.0003
18	.0004	.0003	.0002	.0002	.0002	.0001

j	Shear flow, q_{ij}, at station -					
	i = 0	i = 1	i = 2	i = 3	i = 4	i = 5
0	0.5133	0.1726	0.0395	0.0146	0.0070	0.0038
1	-.0382	-.0186	.0145	.0094	.0054	.0031
2	.0372	-.0233	-.0042	.0016	.0021	.0016
3	.0537	-.0167	-.0081	-.0028	-.0006	.0001
4	.0562	-.0120	-.0079	-.0043	-.0022	-.0010
5	.0535	-.0089	-.0067	-.0044	-.0027	-.0016
6	.0482	-.0067	-.0054	-.0040	-.0028	-.0018
7	.0413	-.0050	-.0042	-.0033	-.0025	-.0018
8	.0336	-.0037	-.0032	-.0026	-.0020	-.0015
9	.0253	-.0024	-.0022	-.0019	-.0016	-.0012
10	.0168	-.0014	-.0013	-.0012	-.0010	-.0009
11	.0085	-.0004	-.0005	-.0006	-.0006	-.0005
12	.0007	.0005	.0002	.0000	-.0001	-.0001
13	-.0064	.0012	.0008	.0005	.0003	.0002
14	-.0126	.0018	.0013	.0010	.0007	.0005
15	-.0176	.0023	.0018	.0013	.0010	.0007
16	-.0212	.0027	.0021	.0016	.0012	.0009
17	-.0235	.0029	.0022	.0017	.0013	.0010
18	-.0243	.0030	.0023	.0018	.0013	.0010

TABLE 3.- LOAD DISTRIBUTION DUE TO A UNIT PERTURBATION LOAD

[B = 100; C = 0; m = 36]

(a) Concentrated perturbation load on stringer j = 0 at ring i = 0

j	Stringer load, p_{ij}, at station -						
	i = 0	i = 1	i = 2	i = 3	i = 4	i = 5	i = 6
0	0.5000	0.2548	0.1528	0.1062	0.0825	0.0692	0.0611
1	0	.0699	.0800	.0750	.0678	.0615	.0566
2	0	.0241	.0391	.0460	.0483	.0484	.0475
3	0	.0124	.0225	.0297	.0342	.0369	.0383
4	0	.0079	.0149	.0206	.0250	.0283	.0306
5	0	.0055	.0106	.0151	.0189	.0219	.0243
6	0	.0041	.0079	.0113	.0144	.0170	.0191
7	0	.0030	.0058	.0084	.0108	.0129	.0147
8	0	.0021	.0042	.0061	.0079	.0095	.0109
9	0	.0014	.0028	.0040	.0053	.0064	.0075
10	0	.0007	.0015	.0022	.0030	.0037	.0044
11	0	.0002	.0004	.0006	.0009	.0012	.0015
12	0	-.0004	-.0006	-.0008	-.0009	-.0010	-.0010
13	0	-.0008	-.0015	-.0021	-.0025	-.0029	-.0032
14	0	-.0012	-.0023	-.0032	-.0039	-.0045	-.0050
15	0	-.0015	-.0029	-.0040	-.0050	-.0058	-.0065
16	0	-.0018	-.0033	-.0046	-.0058	-.0068	-.0076
17	0	-.0019	-.0036	-.0050	-.0063	-.0074	-.0083
18	0	-.0020	-.0037	-.0052	-.0064	-.0076	-.0085

j	Shear flow, $q_{ij}L$, at station -					
	i = 0	i = 1	i = 2	i = 3	i = 4	i = 5
0	0.1226	0.0510	0.0233	0.0119	0.0066	0.0041
1	.0527	.0409	.0283	.0191	.0129	.0089
2	.0286	.0259	.0214	.0168	.0129	.0098
3	.0162	.0157	.0142	.0123	.0102	.0083
4	.0083	.0087	.0085	.0079	.0070	.0060
5	.0028	.0036	.0040	.0041	.0040	.0036
6	-.0013	-.0002	.0006	.0011	.0014	.0015
7	-.0043	-.0030	-.0020	-.0013	-.0007	-.0003
8	-.0064	-.0051	-.0040	-.0031	-.0023	-.0018
9	-.0078	-.0064	-.0053	-.0043	-.0035	-.0028
10	-.0085	-.0072	-.0060	-.0050	-.0042	-.0035
11	-.0087	-.0074	-.0063	-.0053	-.0045	-.0038
12	-.0083	-.0071	-.0061	-.0052	-.0044	-.0038
13	-.0074	-.0064	-.0055	-.0048	-.0041	-.0035
14	-.0062	-.0054	-.0047	-.0040	-.0034	-.0030
15	-.0047	-.0041	-.0035	-.0030	-.0026	-.0022
16	-.0029	-.0025	-.0022	-.0019	-.0016	-.0014
17	-.0010	-.0009	-.0007	-.0006	-.0006	-.0005

TABLE 3.- LOAD DISTRIBUTION DUE TO A UNIT PERTURBATION LOAD - Continued

[B = 100; C = 0; m = 36]

(b) Distributed perturbation load on stringer j = 0 between rings i = 0 and i = 1

j	Stringer load, p_{ij}, at station -					
	i = 1	i = 2	i = 3	i = 4	i = 5	i = 6
0	0.3600	0.1972	0.1268	0.0932	0.0753	0.0648
1	.0428	.0770	.0779	.0714	.0645	.0589
2	.0127	.0324	.0431	.0474	.0485	.0480
3	.0063	.0177	.0264	.0321	.0357	.0377
4	.0040	.0115	.0179	.0229	.0267	.0295
5	.0028	.0081	.0129	.0170	.0204	.0231
6	.0020	.0060	.0096	.0129	.0157	.0181
7	.0015	.0044	.0072	.0097	.0119	.0138
8	.0011	.0032	.0051	.0070	.0087	.0102
9	.0007	.0021	.0034	.0047	.0059	.0070
10	.0004	.0011	.0019	.0026	.0033	.0040
11	.0001	.0002	.0005	.0008	.0011	.0014
12	-.0002	-.0005	-.0007	-.0009	-.0010	-.0010
13	-.0004	-.0012	-.0018	-.0023	-.0027	-.0030
14	-.0006	-.0018	-.0027	-.0035	-.0042	-.0048
15	-.0008	-.0022	-.0035	-.0045	-.0054	-.0062
16	-.0009	-.0026	-.0040	-.0052	-.0063	-.0072
17	-.0010	-.0028	-.0043	-.0057	-.0068	-.0078
18	-.0010	-.0028	-.0044	-.0058	-.0070	-.0080

j	Shear flow, $q_{ij}L$, at station -					
	i = 0	i = 1	i = 2	i = 3	i = 4	i = 5
0	0.1400	0.0814	0.0352	0.0168	0.0090	0.0052
1	.0543	.0472	.0343	.0234	.0158	.0108
2	.0289	.0275	.0237	.0191	.0148	.0113
3	.0162	.0161	.0151	.0133	.0112	.0092
4	.0082	.0086	.0087	.0082	.0074	.0065
5	.0026	.0032	.0039	.0041	.0040	.0038
6	-.0015	-.0007	.0002	.0008	.0012	.0014
7	-.0045	-.0036	-.0025	-.0016	-.0010	-.0005
8	-.0066	-.0057	-.0045	-.0035	-.0027	-.0020
9	-.0080	-.0071	-.0058	-.0048	-.0039	-.0031
10	-.0087	-.0078	-.0066	-.0055	-.0046	-.0038
11	-.0089	-.0080	-.0068	-.0058	-.0049	-.0041
12	-.0085	-.0077	-.0066	-.0056	-.0048	-.0041
13	-.0076	-.0069	-.0060	-.0051	-.0044	-.0038
14	-.0064	-.0058	-.0050	-.0043	-.0037	-.0032
15	-.0048	-.0044	-.0038	-.0033	-.0028	-.0024
16	-.0030	-.0027	-.0024	-.0020	-.0018	-.0015
17	-.0010	-.0009	-.0008	-.0007	-.0006	-.0005

TABLE 3.- LOAD DISTRIBUTION DUE TO A UNIT PERTURBATION LOAD - Concluded

[B = 100; C = 0; m = 36]

(c) Shear perturbation load about shear panel (0,0)

j	Stringer load, p_{ij}/L, at station -					
	i = 1	i = 2	i = 3	i = 4	i = 5	i = 6
1	-0.3168	-0.1198	-0.0485	-0.0214	-0.0103	-0.0055
2	-.0288	-.0433	-.0335	-.0226	-.0148	-.0097
3	-.0043	-.0127	-.0147	-.0132	-.0107	-.0083
4	.0004	-.0035	-.0057	-.0064	-.0062	-.0054
5	.0022	.0001	-.0015	-.0025	-.0029	-.0029
6	.0032	.0018	.0007	-.0002	-.0008	-.0011
7	.0038	.0028	.0019	.0012	.0006	.0002
8	.0042	.0034	.0027	.0020	.0015	.0010
9	.0045	.0037	.0031	.0025	.0020	.0016
10	.0045	.0039	.0033	.0028	.0023	.0019
11	.0044	.0038	.0033	.0028	.0024	.0020
12	.0041	.0036	.0032	.0027	.0024	.0020
13	.0037	.0033	.0029	.0025	.0022	.0019
14	.0032	.0028	.0025	.0022	.0019	.0017
15	.0026	.0023	.0020	.0018	.0016	.0014
16	.0019	.0017	.0015	.0013	.0012	.0010
17	.0012	.0010	.0009	.0008	.0007	.0006
18	.0004	.0004	.0003	.0003	.0002	.0002

j	Shear flow, q_{ij}, at station -					
	i = 0	i = 1	i = 2	i = 3	i = 4	i = 5
0	0.3632	0.1628	0.0704	0.0337	0.0179	0.0104
1	-.0032	-.0342	-.0009	.0065	.0068	.0056
2	.0546	-.0197	-.0106	-.0043	-.0010	.0005
3	.0632	-.0114	-.0086	-.0058	-.0035	-.0020
4	.0624	-.0075	-.0064	-.0051	-.0038	-.0027
5	.0579	-.0053	-.0048	-.0041	-.0034	-.0027
6	.0515	-.0040	-.0036	-.0032	-.0028	-.0024
7	.0438	-.0029	-.0027	-.0025	-.0022	-.0020
8	.0353	-.0021	-.0020	-.0018	-.0017	-.0015
9	.0264	-.0014	-.0013	-.0013	-.0012	-.0011
10	.0174	-.0008	-.0008	-.0008	-.0007	-.0007
11	.0086	-.0002	-.0002	-.0003	-.0003	-.0003
12	.0004	.0003	.0002	.0001	.0001	.0000
13	-.0071	.0008	.0006	.0005	.0004	.0003
14	-.0135	.0011	.0010	.0008	.0007	.0006
15	-.0188	.0014	.0012	.0011	.0009	.0008
16	-.0226	.0017	.0014	.0012	.0011	.0009
17	-.0250	.0018	.0016	.0013	.0012	.0010
18	-.0258	.0018	.0016	.0014	.0012	.0010

TABLE 4.- LOAD DISTRIBUTION DUE TO A UNIT PERTURBATION LOAD

[B = 300; C = 0; m = 36]

(a) Concentrated perturbation load on stringer $j = 0$ at ring $i = 0$

j	Stringer load, p_{ij}, at station -						
	i = 0	i = 1	i = 2	i = 3	i = 4	i = 5	i = 6
0	0.5000	0.3354	0.2366	0.1756	0.1370	0.1116	0.0945
1	0	.0506	.0716	.0782	.0781	.0752	.0713
2	0	.0149	.0271	.0359	.0417	.0453	.0472
3	0	.0074	.0142	.0201	.0250	.0290	.0320
4	0	.0046	.0091	.0132	.0168	.0201	.0228
5	0	.0032	.0064	.0094	.0121	.0147	.0170
6	0	.0024	.0047	.0069	.0090	.0110	.0128
7	0	.0018	.0035	.0051	.0067	.0082	.0096
8	0	.0012	.0025	.0036	.0048	.0059	.0070
9	0	.0008	.0016	.0024	.0032	.0039	.0046
10	0	.0004	.0008	.0013	.0017	.0021	.0026
11	0	.0001	.0002	.0003	.0004	.0006	.0007
12	0	-.0002	-.0004	-.0006	-.0007	-.0008	-.0009
13	0	-.0005	-.0010	-.0014	-.0017	-.0021	-.0023
14	0	-.0007	-.0014	-.0020	-.0026	-.0031	-.0035
15	0	-.0009	-.0018	-.0025	-.0032	-.0039	-.0045
16	0	-.0010	-.0020	-.0029	-.0037	-.0045	-.0052
17	0	-.0011	-.0022	-.0031	-.0040	-.0048	-.0056
18	0	-.0012	-.0022	-.0032	-.0041	-.0050	-.0057

j	Shear flow, $q_{ij}L$, at station -					
	i = 0	i = 1	i = 2	i = 3	i = 4	i = 5
0	0.0823	0.0494	0.0305	0.0193	0.0127	0.0086
1	.0317	.0284	.0239	.0194	.0156	.0125
2	.0168	.0162	.0151	.0136	.0120	.0105
3	.0094	.0094	.0092	.0087	.0081	.0075
4	.0048	.0050	.0051	.0050	.0049	.0047
5	.0015	.0018	.0021	.0022	.0024	.0024
6	-.0009	-.0005	-.0001	.0002	.0004	.0006
7	-.0026	-.0022	-.0018	-.0014	-.0011	-.0009
8	-.0039	-.0034	-.0030	-.0026	-.0022	-.0019
9	-.0047	-.0042	-.0038	-.0034	-.0030	-.0026
10	-.0051	-.0046	-.0042	-.0038	-.0034	-.0031
11	-.0052	-.0047	-.0043	-.0039	-.0036	-.0032
12	-.0049	-.0045	-.0041	-.0038	-.0035	-.0032
13	-.0044	-.0041	-.0037	-.0034	-.0032	-.0029
14	-.0037	-.0034	-.0031	-.0029	-.0026	-.0024
15	-.0028	-.0026	-.0024	-.0022	-.0020	-.0018
16	-.0017	-.0016	-.0015	-.0014	-.0012	-.0011
17	-.0006	-.0005	-.0005	-.0005	-.0004	-.0004

TABLE 4.- LOAD DISTRIBUTION DUE TO A UNIT PERTURBATION LOAD - Continued

[B = 300; C = 0; m = 36]

(b) Distributed perturbation load on stringer j = 0 between rings i = 0 and i = 1

j	Stringer load, p_{ij}, at station -					
	i = 1	i = 2	i = 3	i = 4	i = 5	i = 6
0	0.4108	0.2820	0.2038	0.1549	0.1234	0.1026
1	.0286	.0628	.0757	.0785	.0768	.0733
2	.0076	.0213	.0318	.0390	.0436	.0464
3	.0037	.0109	.0172	.0227	.0271	.0305
4	.0023	.0069	.0111	.0150	.0185	.0215
5	.0016	.0048	.0079	.0108	.0134	.0158
6	.0012	.0036	.0058	.0080	.0100	.0119
7	.0009	.0026	.0043	.0059	.0074	.0089
8	.0006	.0018	.0031	.0042	.0054	.0064
9	.0004	.0012	.0020	.0028	.0035	.0043
10	.0002	.0006	.0010	.0015	.0019	.0024
11	.0000	.0001	.0002	.0003	.0005	.0006
12	-.0001	-.0004	-.0005	-.0007	-.0008	-.0009
13	-.0003	-.0007	-.0012	-.0016	-.0019	-.0022
14	-.0004	-.0011	-.0017	-.0023	-.0028	-.0033
15	-.0005	-.0014	-.0022	-.0029	-.0036	-.0042
16	-.0005	-.0015	-.0025	-.0033	-.0041	-.0048
17	-.0006	-.0017	-.0027	-.0036	-.0044	-.0052
18	-.0006	-.0017	-.0027	-.0037	-.0046	-.0054

j	Shear flow, $q_{ij}L$, at station -					
	i = 0	i = 1	i = 2	i = 3	i = 4	i = 5
0	0.0892	0.0644	0.0391	0.0244	0.0157	0.0104
1	.0320	.0302	.0262	.0216	.0175	.0140
2	.0168	.0166	.0157	.0144	.0128	.0113
3	.0094	.0094	.0093	.0089	.0084	.0078
4	.0047	.0049	.0050	.0050	.0050	.0048
5	.0014	.0017	.0020	.0022	.0023	.0024
6	-.0010	-.0007	-.0003	.0000	.0003	.0005
7	-.0027	-.0024	-.0020	-.0016	-.0013	-.0010
8	-.0040	-.0036	-.0032	-.0028	-.0024	-.0021
9	-.0048	-.0044	-.0040	-.0036	-.0032	-.0028
10	-.0052	-.0049	-.0044	-.0040	-.0036	-.0032
11	-.0052	-.0049	-.0045	-.0041	-.0037	-.0034
12	-.0050	-.0047	-.0043	-.0040	-.0036	-.0033
13	-.0045	-.0042	-.0039	-.0036	-.0033	-.0030
14	-.0037	-.0035	-.0033	-.0030	-.0028	-.0025
15	-.0028	-.0026	-.0024	-.0023	-.0021	-.0019
16	-.0017	-.0016	-.0015	-.0014	-.0013	-.0012
17	-.0006	-.0006	-.0005	-.0005	-.0004	-.0004

TABLE 4.- LOAD DISTRIBUTION DUE TO A UNIT PERTURBATION LOAD - Concluded

[B = 300; C = 0; m = 36]

(c) Shear perturbation load about shear panel (0,0)

j	Stringer load, p_{ij}/L, at station -					
	i = 1	i = 2	i = 3	i = 4	i = 5	i = 6
1	-0.3817	-0.2188	-0.1276	-0.0759	-0.0462	-0.0288
2	-.0197	-.0402	-.0427	-.0383	-.0319	-.0256
3	-.0018	-.0084	-.0125	-.0143	-.0145	-.0138
4	.0014	-.0012	-.0033	-.0049	-.0058	-.0063
5	.0027	.0014	.0002	-.0008	-.0016	-.0022
6	.0035	.0027	.0019	.0012	.0006	.0000
7	.0041	.0034	.0029	.0023	.0018	.0014
8	.0044	.0039	.0034	.0030	.0026	.0022
9	.0046	.0042	.0038	.0034	.0030	.0027
10	.0046	.0042	.0039	.0035	.0032	.0029
11	.0045	.0042	.0038	.0035	.0032	.0030
12	.0042	.0039	.0036	.0034	.0031	.0029
13	.0038	.0036	.0033	.0031	.0029	.0026
14	.0033	.0031	.0029	.0027	.0025	.0023
15	.0027	.0025	.0023	.0022	.0020	.0019
16	.0020	.0018	.0017	.0016	.0015	.0014
17	.0012	.0011	.0011	.0010	.0009	.0009
18	.0004	.0004	.0004	.0003	.0003	.0003

j	Shear flow, q_{ij}, at station -					
	i = 0	i = 1	i = 2	i = 3	i = 4	i = 5
0	0.2618	0.1287	0.0782	0.0489	0.0315	0.0209
1	.0253	-.0341	-.0130	-.0028	.0017	.0035
2	.0648	-.0137	-.0105	-.0072	-.0046	-.0027
3	.0684	-.0071	-.0064	-.0054	-.0044	-.0035
4	.0657	-.0045	-.0043	-.0039	-.0034	-.0030
5	.0602	-.0032	-.0031	-.0029	-.0027	-.0024
6	.0532	-.0024	-.0023	-.0022	-.0020	-.0019
7	.0450	-.0017	-.0017	-.0016	-.0015	-.0015
8	.0362	-.0012	-.0012	-.0012	-.0011	-.0011
9	.0270	-.0008	-.0008	-.0008	-.0008	-.0007
10	.0177	-.0004	-.0004	-.0004	-.0004	-.0004
11	.0087	-.0001	-.0001	-.0001	-.0001	-.0002
12	.0002	.0002	.0002	.0002	.0001	.0001
13	-.0074	.0005	.0004	.0004	.0003	.0003
14	-.0140	.0007	.0006	.0006	.0005	.0005
15	-.0194	.0009	.0008	.0007	.0007	.0006
16	-.0234	.0010	.0009	.0009	.0008	.0007
17	-.0258	.0011	.0010	.0009	.0008	.0008
18	-.0266	.0011	.0010	.0010	.0009	.0008

TABLE 5.- LOAD DISTRIBUTION DUE TO A UNIT PERTURBATION LOAD

[B = 1,000; C = 0; m = 36]

(a) Concentrated perturbation load on stringer $j = 0$ at ring $i = 0$

j	Stringer load, p_{ij}, at station -						
	i = 0	i = 1	i = 2	i = 3	i = 4	i = 5	i = 6
0	0.5000	0.4001	0.3248	0.2676	0.2237	0.1900	0.1637
1	0	.0323	.0530	.0657	.0731	.0769	.0783
2	0	.0084	.0162	.0232	.0290	.0338	.0378
3	0	.0041	.0081	.0119	.0154	.0187	.0216
4	0	.0026	.0051	.0075	.0099	.0121	.0143
5	0	.0018	.0036	.0053	.0070	.0086	.0102
6	0	.0013	.0026	.0039	.0051	.0064	.0075
7	0	.0010	.0019	.0029	.0038	.0047	.0056
8	0	.0007	.0014	.0020	.0027	.0033	.0040
9	0	.0004	.0009	.0013	.0018	.0022	.0026
10	0	.0002	.0004	.0007	.0009	.0012	.0014
11	0	.0000	.0001	.0001	.0002	.0002	.0003
12	0	-.0001	-.0003	-.0004	-.0005	-.0006	-.0006
13	0	-.0003	-.0006	-.0008	-.0010	-.0013	-.0015
14	0	-.0004	-.0008	-.0012	-.0015	-.0019	-.0022
15	0	-.0005	-.0010	-.0015	-.0019	-.0023	-.0027
16	0	-.0006	-.0011	-.0017	-.0022	-.0027	-.0032
17	0	-.0006	-.0012	-.0018	-.0024	-.0029	-.0034
18	0	-.0006	-.0013	-.0018	-.0024	-.0030	-.0035

j	Shear flow, $q_{ij}L$, at station -					
	i = 0	i = 1	i = 2	i = 3	i = 4	i = 5
0	0.0499	0.0377	0.0286	0.0219	0.0169	0.0132
1	.0177	.0170	.0159	.0145	.0131	.0118
2	.0092	.0092	.0090	.0087	.0083	.0079
3	.0051	.0052	.0052	.0051	.0050	.0049
4	.0026	.0027	.0027	.0028	.0028	.0028
5	.0008	.0009	.0010	.0011	.0011	.0012
6	-.0005	-.0004	-.0003	-.0002	-.0001	.0000
7	-.0015	-.0014	-.0012	-.0011	-.0010	-.0009
8	-.0022	-.0020	-.0019	-.0018	-.0016	-.0015
9	-.0026	-.0025	-.0023	-.0022	-.0021	-.0019
10	-.0029	-.0027	-.0026	-.0024	-.0023	-.0022
11	-.0029	-.0028	-.0026	-.0025	-.0024	-.0022
12	-.0028	-.0026	-.0025	-.0024	-.0023	-.0022
13	-.0025	-.0024	-.0022	-.0022	-.0020	-.0020
14	-.0020	-.0020	-.0019	-.0018	-.0017	-.0016
15	-.0015	-.0015	-.0014	-.0014	-.0013	-.0012
16	-.0010	-.0009	-.0009	-.0008	-.0008	-.0008
17	-.0003	-.0003	-.0003	-.0003	-.0003	-.0003

TABLE 5.- LOAD DISTRIBUTION DUE TO A UNIT PERTURBATION LOAD - Continued

[B = 1,000; C = 0; m = 36]

(b) Distributed perturbation load on stringer j = 0 between rings i = 0 and i = 1

j	Stringer load, p_{ij}, at station -					
	i = 1	i = 2	i = 3	i = 4	i = 5	i = 6
0	0.4477	0.3607	0.2949	0.2447	0.2061	0.1763
1	.0173	.0434	.0599	.0698	.0752	.0777
2	.0042	.0124	.0198	.0262	.0315	.0359
3	.0021	.0061	.0100	.0137	.0171	.0202
4	.0013	.0038	.0063	.0087	.0110	.0132
5	.0009	.0027	.0044	.0061	.0078	.0094
6	.0007	.0020	.0032	.0045	.0058	.0070
7	.0005	.0014	.0024	.0033	.0042	.0051
8	.0003	.0010	.0017	.0024	.0030	.0037
9	.0002	.0007	.0011	.0015	.0020	.0024
10	.0001	.0003	.0006	.0008	.0010	.0013
11	.0000	.0000	.0001	.0002	.0002	.0003
12	-.0001	-.0002	-.0003	-.0004	-.0005	-.0006
13	-.0001	-.0004	-.0007	-.0009	-.0012	-.0014
14	-.0002	-.0006	-.0010	-.0014	-.0017	-.0020
15	-.0003	-.0008	-.0012	-.0017	-.0021	-.0025
16	-.0003	-.0009	-.0014	-.0019	-.0024	-.0029
17	-.0003	-.0009	-.0015	-.0021	-.0026	-.0032
18	-.0003	-.0010	-.0016	-.0021	-.0027	-.0032

j	Shear flow, $q_{ij}L$, at station -					
	i = 0	i = 1	i = 2	i = 3	i = 4	i = 5
0	0.0523	0.0435	0.0329	0.0251	0.0193	0.0149
1	.0177	.0174	.0164	.0152	.0138	.0124
2	.0092	.0092	.0091	.0088	.0085	.0081
3	.0051	.0052	.0052	.0051	.0051	.0050
4	.0026	.0026	.0027	.0027	.0028	.0028
5	.0008	.0008	.0009	.0010	.0011	.0012
6	-.0006	-.0005	-.0004	-.0002	-.0001	.0000
7	-.0015	-.0014	-.0013	-.0012	-.0010	-.0009
8	-.0022	-.0021	-.0020	-.0018	-.0017	-.0016
9	-.0027	-.0026	-.0024	-.0023	-.0021	-.0020
10	-.0029	-.0028	-.0026	-.0025	-.0024	-.0022
11	-.0029	-.0028	-.0027	-.0026	-.0024	-.0023
12	-.0028	-.0027	-.0026	-.0024	-.0023	-.0022
13	-.0025	-.0024	-.0023	-.0022	-.0021	-.0020
14	-.0021	-.0020	-.0019	-.0018	-.0018	-.0017
15	-.0016	-.0015	-.0014	-.0014	-.0013	-.0013
16	-.0010	-.0009	-.0009	-.0008	-.0008	-.0008
17	-.0003	-.0003	-.0003	-.0003	-.0003	-.0003

TABLE 5.- LOAD DISTRIBUTION DUE TO A UNIT PERTURBATION LOAD - Concluded

[B = 1,000; C = 0; m = 36]

(c) Shear perturbation load about shear panel (0,0)

j	Stringer load, p_{ij}/L, at station -					
	i = 1	i = 2	i = 3	i = 4	i = 5	i = 6
1	-0.4300	-0.3169	-0.2346	-0.1745	-0.1305	-0.0981
2	-.0118	-.0297	-.0388	-.0424	-.0425	-.0406
3	-.0002	-.0043	-.0077	-.0104	-.0124	-.0136
4	.0020	.0005	-.0009	-.0022	-.0033	-.0042
5	.0030	.0023	.0015	.0008	.0002	-.0004
6	.0037	.0032	.0028	.0023	.0019	.0015
7	.0042	.0039	.0035	.0032	.0029	.0026
8	.0045	.0042	.0040	.0037	.0035	.0032
9	.0047	.0045	.0042	.0040	.0038	.0036
10	.0047	.0045	.0043	.0041	.0039	.0037
11	.0046	.0044	.0042	.0040	.0038	.0037
12	.0043	.0041	.0040	.0038	.0036	.0035
13	.0039	.0038	.0036	.0035	.0033	.0032
14	.0034	.0032	.0031	.0030	.0029	.0028
15	.0027	.0026	.0025	.0024	.0024	.0023
16	.0020	.0019	.0019	.0018	.0017	.0017
17	.0012	.0012	.0011	.0011	.0011	.0010
18	.0004	.0004	.0004	.0004	.0004	.0004

j	Shear flow, q_{ij}, at station -					
	i = 0	i = 1	i = 2	i = 3	i = 4	i = 5
0	0.1879	0.0870	0.0658	0.0502	0.0386	0.0299
1	.0479	-.0261	-.0165	-.0099	-.0055	-.0025
2	.0715	-.0082	-.0074	-.0064	-.0054	-.0044
3	.0718	-.0040	-.0039	-.0037	-.0034	-.0031
4	.0678	-.0025	-.0025	-.0024	-.0023	-.0022
5	.0617	-.0018	-.0018	-.0017	-.0017	-.0016
6	.0542	-.0013	-.0013	-.0013	-.0012	-.0012
7	.0458	-.0010	-.0010	-.0009	-.0009	-.0009
8	.0367	-.0007	-.0007	-.0007	-.0007	-.0006
9	.0273	-.0004	-.0004	-.0004	-.0004	-.0004
10	.0179	-.0002	-.0002	-.0002	-.0002	-.0002
11	.0088	.0000	.0000	.0000	-.0001	-.0001
12	.0001	.0001	.0001	.0001	.0001	.0001
13	-.0076	.0003	.0003	.0002	.0002	.0002
14	-.0144	.0004	.0004	.0004	.0003	.0003
15	-.0198	.0005	.0005	.0005	.0004	.0004
16	-.0238	.0006	.0006	.0005	.0005	.0005
17	-.0263	.0006	.0006	.0006	.0005	.0005
18	-.0271	.0006	.0006	.0006	.0006	.0005

TABLE 6.- LOAD DISTRIBUTION DUE TO A UNIT PERTURBATION LOAD

$$\left[B = 8;\ C = 2 \times 10^2;\ m = 36\right]$$

(a) Concentrated perturbation load on stringer $j = 0$ at ring $i = 0$

j	Stringer load, p_{ij}, at station -						
	i = 0	i = 1	i = 2	i = 3	i = 4	i = 5	i = 6
0	0.5000	0.0499	0.0576	0.0461	0.0435	0.0426	0.0421
1	0	.0916	.0500	.0459	.0429	.0421	.0416
2	0	.0528	.0483	.0430	.0413	.0406	.0403
3	0	.0339	.0407	.0395	.0386	.0383	.0381
4	0	.0233	.0331	.0350	.0352	.0352	.0352
5	0	.0165	.0264	.0300	.0312	.0315	.0316
6	0	.0117	.0206	.0250	.0267	.0273	.0276
7	0	.0080	.0156	.0200	.0220	.0227	.0231
8	0	.0051	.0113	.0152	.0172	.0180	.0184
9	0	.0028	.0074	.0107	.0125	.0131	.0135
10	0	.0009	.0040	.0065	.0079	.0084	.0087
11	0	-.0005	.0010	.0026	.0035	.0039	.0041
12	0	-.0017	-.0015	-.0009	-.0005	-.0003	-.0002
13	0	-.0025	-.0037	-.0040	-.0040	-.0040	-.0040
14	0	-.0032	-.0054	-.0065	-.0070	-.0072	-.0073
15	0	-.0036	-.0067	-.0085	-.0095	-.0098	-.0100
16	0	-.0039	-.0076	-.0100	-.0112	-.0117	-.0120
17	0	-.0041	-.0082	-.0109	-.0123	-.0128	-.0132
18	0	-.0042	-.0084	-.0112	-.0127	-.0132	-.0136

j	Shear flow, $q_{ij}L$, at station -					
	i = 0	i = 1	i = 2	i = 3	i = 4	i = 5
0	0.2250	-0.0038	0.0058	0.0013	0.0005	0.0002
1	.1334	.0378	.0099	.0043	.0013	.0007
2	.0806	.0423	.0152	.0061	.0020	.0010
3	.0467	.0355	.0164	.0069	.0023	.0012
4	.0234	.0257	.0145	.0067	.0023	.0012
5	.0068	.0159	.0109	.0056	.0020	.0011
6	-.0049	.0069	.0066	.0038	.0014	.0008
7	-.0129	-.0007	.0022	.0018	.0007	.0004
8	-.0180	-.0069	-.0018	-.0002	-.0001	.0000
9	-.0208	-.0115	-.0051	-.0020	-.0007	-.0003
10	-.0217	-.0145	-.0076	-.0034	-.0012	-.0006
11	-.0212	-.0161	-.0091	-.0044	-.0016	-.0009
12	-.0195	-.0162	-.0098	-.0049	-.0018	-.0010
13	-.0170	-.0151	-.0095	-.0049	-.0018	-.0010
14	-.0138	-.0129	-.0083	-.0043	-.0016	-.0009
15	-.0102	-.0098	-.0065	-.0034	-.0013	-.0007
16	-.0062	-.0062	-.0041	-.0021	-.0008	-.0005
17	-.0021	-.0021	-.0014	-.0007	-.0003	-.0002

TABLE 6.- LOAD DISTRIBUTION DUE TO A UNIT PERTURBATION LOAD - Continued

$$\left[B = 8;\ C = 2 \times 10^2;\ m = 36\right]$$

(b) Distributed perturbation load on stringer $j = 0$ between rings $i = 0$ and $i = 1$

j	Stringer load, p_{ij}, at station -					
	i = 1	i = 2	i = 3	i = 4	i = 5	i = 6
0	0.1941	0.0583	0.0505	0.0447	0.0430	0.0423
1	.0743	.0645	.0481	.0441	.0425	.0418
2	.0353	.0512	.0452	.0421	.0410	.0404
3	.0201	.0387	.0401	.0390	.0385	.0382
4	.0129	.0293	.0343	.0351	.0352	.0352
5	.0087	.0222	.0285	.0307	.0313	.0316
6	.0058	.0166	.0231	.0260	.0270	.0274
7	.0038	.0121	.0181	.0211	.0224	.0229
8	.0022	.0083	.0134	.0164	.0176	.0182
9	.0010	.0052	.0092	.0117	.0128	.0134
10	.0001	.0024	.0053	.0073	.0081	.0086
11	-.0006	.0002	.0018	.0031	.0037	.0040
12	-.0011	-.0017	-.0012	-.0007	-.0004	-.0002
13	-.0014	-.0032	-.0038	-.0040	-.0040	-.0040
14	-.0016	-.0044	-.0060	-.0068	-.0071	-.0073
15	-.0018	-.0053	-.0077	-.0090	-.0096	-.0099
16	-.0019	-.0059	-.0089	-.0107	-.0114	-.0118
17	-.0020	-.0062	-.0097	-.0117	-.0126	-.0130
18	-.0020	-.0064	-.0099	-.0120	-.0130	-.0134

j	Shear flow, $q_{ij}L$, at station -					
	i = 0	i = 1	i = 2	i = 3	i = 4	i = 5
0	0.3059	0.0679	0.0039	0.0029	0.0008	0.0004
1	.1572	.0778	.0203	.0068	.0025	.0010
2	.0866	.0619	.0263	.0099	.0036	.0016
3	.0464	.0433	.0249	.0110	.0041	.0018
4	.0206	.0270	.0199	.0102	.0039	.0018
5	.0033	.0134	.0135	.0080	.0033	.0016
6	-.0084	.0026	.0071	.0051	.0022	.0012
7	-.0159	-.0057	.0011	.0021	.0010	.0006
8	-.0204	-.0118	-.0040	-.0009	-.0002	.0000
9	-.0224	-.0160	-.0080	-.0034	-.0013	-.0005
10	-.0226	-.0183	-.0109	-.0054	-.0021	-.0010
11	-.0215	-.0190	-.0125	-.0066	-.0027	-.0013
12	-.0194	-.0184	-.0130	-.0072	-.0030	-.0015
13	-.0166	-.0166	-.0123	-.0070	-.0030	-.0015
14	-.0133	-.0139	-.0107	-.0062	-.0027	-.0013
15	-.0097	-.0104	-.0083	-.0049	-.0021	-.0010
16	-.0059	-.0064	-.0052	-.0031	-.0014	-.0007
17	-.0020	-.0022	-.0018	-.0011	-.0005	-.0002

TABLE 6.- LOAD DISTRIBUTION DUE TO A UNIT PERTURBATION LOAD - Concluded

$$\left[B = 8;\ C = 2 \times 10^2;\ m = 36\right]$$

(c) Shear perturbation load about shear panel (0,0)

j	Stringer load, p_{ij}/L, at station -					
	i = 1	i = 2	i = 3	i = 4	i = 5	i = 6
1	-0.1182	0.0067	-0.0020	-0.0002	-0.0001	0.0000
2	-.0348	-.0118	-.0018	-.0010	-.0003	-.0001
3	-.0088	-.0100	-.0032	-.0012	-.0004	-.0002
4	.0005	-.0060	-.0032	-.0014	-.0005	-.0002
5	.0040	-.0030	-.0025	-.0013	-.0005	-.0002
6	.0052	-.0008	-.0016	-.0010	-.0004	-.0002
7	.0052	.0005	-.0007	-.0006	-.0003	-.0001
8	.0045	.0014	.0000	-.0002	-.0001	-.0001
9	.0035	.0019	.0006	.0001	.0000	.0000
10	.0024	.0021	.0010	.0004	.0002	.0001
11	.0014	.0021	.0013	.0007	.0002	.0001
12	.0005	.0019	.0015	.0008	.0003	.0002
13	-.0001	.0017	.0015	.0009	.0003	.0002
14	-.0005	.0014	.0014	.0009	.0003	.0002
15	-.0007	.0011	.0012	.0008	.0003	.0002
16	-.0006	.0008	.0009	.0006	.0002	.0001
17	-.0004	.0004	.0006	.0004	.0001	.0001
18	-.0002	.0001	.0002	.0001	.0000	.0000

j	Shear flow, q_{ij}, at station -					
	i = 0	i = 1	i = 2	i = 3	i = 4	i = 5
0	0.7239	0.1233	0.0054	0.0055	0.0016	0.0008
1	-.0397	-.0016	.0141	.0037	.0015	.0007
2	.0301	-.0246	.0040	.0029	.0008	.0005
3	.0477	-.0234	-.0028	.0009	.0000	.0003
4	.0467	-.0168	-.0056	-.0009	-.0009	.0000
5	.0386	-.0098	-.0060	-.0022	-.0017	-.0002
6	.0281	-.0038	-.0053	-.0028	-.0023	-.0004
7	.0178	.0008	-.0040	-.0029	-.0026	-.0006
8	.0088	.0039	-.0027	-.0027	-.0027	-.0006
9	.0018	.0055	-.0014	-.0022	-.0026	-.0006
10	-.0030	.0059	-.0003	-.0016	-.0024	-.0004
11	-.0058	.0052	.0005	-.0010	-.0019	-.0003
12	-.0069	.0038	.0010	-.0004	-.0014	-.0002
13	-.0067	.0020	.0012	.0002	-.0008	.0000
14	-.0057	.0002	.0012	.0007	-.0002	.0002
15	-.0044	-.0016	.0011	.0011	.0003	.0003
16	-.0032	-.0030	.0010	.0015	.0007	.0004
17	-.0023	-.0038	.0009	.0017	.0010	.0004
18	-.0020	-.0041	.0008	.0018	.0011	.0005

TABLE 7.- LOAD DISTRIBUTION DUE TO A UNIT PERTURBATION LOAD

$$\left[B = 30;\ C = 2 \times 10^2;\ m = 36\right]$$

(a) Concentrated perturbation load on stringer $j = 0$ at ring $i = 0$

j	Stringer load, p_{ij}, at station -						
	i = 0	i = 1	i = 2	i = 3	i = 4	i = 5	i = 6
0	0.5000	0.1521	0.0854	0.0637	0.0541	0.0491	0.0463
1	0	.0870	.0713	.0589	.0519	.0478	.0454
2	0	.0377	.0489	.0485	.0462	.0443	.0429
3	0	.0211	.0332	.0380	.0393	.0394	.0392
4	0	.0137	.0237	.0296	.0326	.0341	.0348
5	0	.0097	.0176	.0232	.0267	.0288	.0300
6	0	.0070	.0133	.0180	.0214	.0236	.0251
7	0	.0051	.0099	.0138	.0167	.0188	.0203
8	0	.0035	.0071	.0100	.0125	.0143	.0156
9	0	.0022	.0046	.0068	.0086	.0100	.0111
10	0	.0011	.0025	.0039	.0051	.0061	.0068
11	0	.0001	.0006	.0013	.0019	.0024	.0029
12	0	-.0008	-.0010	-.0011	-.0010	-.0009	-.0007
13	0	-.0015	-.0025	-.0031	-.0035	-.0037	-.0039
14	0	-.0021	-.0036	-.0048	-.0056	-.0062	-.0066
15	0	-.0025	-.0046	-.0061	-.0073	-.0081	-.0087
16	0	-.0028	-.0052	-.0071	-.0085	-.0095	-.0103
17	0	-.0030	-.0057	-.0077	-.0092	-.0104	-.0112
18	0	-.0031	-.0058	-.0079	-.0095	-.0107	-.0116

j	Shear flow, $q_{ij}L$, at station -					
	i = 0	i = 1	i = 2	i = 3	i = 4	i = 5
0	0.1739	0.0334	0.0108	0.0048	0.0025	0.0014
1	.0869	.0491	.0232	.0118	.0066	.0038
2	.0493	.0378	.0236	.0141	.0085	.0052
3	.0282	.0256	.0189	.0128	.0084	.0054
4	.0145	.0156	.0130	.0098	.0069	.0047
5	.0048	.0077	.0075	.0063	.0048	.0035
6	-.0023	.0015	.0027	.0029	.0026	.0021
7	-.0074	-.0033	-.0012	.0000	.0005	.0006
8	-.0109	-.0069	-.0042	-.0024	-.0013	-.0007
9	-.0131	-.0093	-.0064	-.0042	-.0027	-.0018
10	-.0141	-.0108	-.0078	-.0054	-.0037	-.0025
11	-.0142	-.0113	-.0084	-.0060	-.0042	-.0030
12	-.0134	-.0110	-.0084	-.0061	-.0043	-.0031
13	-.0120	-.0100	-.0077	-.0057	-.0041	-.0030
14	-.0099	-.0085	-.0066	-.0049	-.0035	-.0026
15	-.0074	-.0064	-.0050	-.0037	-.0027	-.0020
16	-.0046	-.0040	-.0031	-.0023	-.0017	-.0013
17	-.0016	-.0013	-.0011	-.0008	-.0006	-.0004

TABLE 7.- LOAD DISTRIBUTION DUE TO A UNIT PERTURBATION LOAD - Continued

$$\left[B = 30;\ C = 2 \times 10^2;\ m = 36\right]$$

(b) Distributed perturbation load on stringer $j = 0$ between rings $i = 0$ and $i = 1$

j	Stringer load, p_{ij}, at station -					
	i = 1	i = 2	i = 3	i = 4	i = 5	i = 6
0	0.2853	0.1127	0.0731	0.0584	0.0514	0.0476
1	.0606	.0792	.0645	.0551	.0496	.0465
2	.0216	.0449	.0490	.0474	.0452	.0435
3	.0112	.0280	.0361	.0388	.0394	.0393
4	.0071	.0191	.0270	.0313	.0334	.0345
5	.0049	.0139	.0206	.0251	.0278	.0294
6	.0035	.0103	.0158	.0198	.0226	.0244
7	.0025	.0075	.0119	.0153	.0178	.0196
8	.0017	.0053	.0086	.0113	.0134	.0150
9	.0010	.0034	.0058	.0077	.0094	.0106
10	.0005	.0018	.0032	.0045	.0056	.0065
11	.0000	.0003	.0009	.0016	.0022	.0027
12	-.0004	-.0009	-.0011	-.0010	-.0009	-.0008
13	-.0008	-.0020	-.0028	-.0033	-.0036	-.0038
14	-.0011	-.0029	-.0042	-.0052	-.0059	-.0064
15	-.0013	-.0036	-.0054	-.0067	-.0077	-.0084
16	-.0014	-.0041	-.0062	-.0078	-.0091	-.0099
17	-.0015	-.0044	-.0067	-.0085	-.0099	-.0108
18	-.0016	-.0045	-.0069	-.0087	-.0101	-.0112

j	Shear flow, $q_{ij}L$, at station -					
	i = 0	i = 1	i = 2	i = 3	i = 4	i = 5
0	0.2147	0.0863	0.0198	0.0073	0.0035	0.0019
1	.0935	.0677	.0344	.0168	.0089	.0050
2	.0504	.0443	.0304	.0185	.0110	.0066
3	.0280	.0276	.0223	.0157	.0104	.0067
4	.0138	.0155	.0144	.0114	.0083	.0057
5	.0039	.0066	.0077	.0069	.0056	.0041
6	-.0032	-.0001	.0022	.0029	.0028	.0023
7	-.0082	-.0051	-.0021	-.0005	.0003	.0005
8	-.0116	-.0088	-.0054	-.0032	-.0018	-.0010
9	-.0137	-.0112	-.0078	-.0052	-.0035	-.0022
10	-.0146	-.0125	-.0092	-.0065	-.0046	-.0031
11	-.0146	-.0128	-.0098	-.0071	-.0052	-.0036
12	-.0137	-.0123	-.0097	-.0071	-.0053	-.0037
13	-.0122	-.0111	-.0089	-.0066	-.0050	-.0035
14	-.0100	-.0093	-.0075	-.0057	-.0043	-.0030
15	-.0075	-.0070	-.0057	-.0043	-.0033	-.0023
16	-.0046	-.0043	-.0035	-.0027	-.0020	-.0015
17	-.0016	-.0015	-.0012	-.0009	-.0006	-.0005

TABLE 7.- LOAD DISTRIBUTION DUE TO A UNIT PERTURBATION LOAD - Concluded

$$\left[B = 30;\ C = 2 \times 10^2;\ m = 36\right]$$

(c) Shear perturbation load about shear panel (0,0)

j	Stringer load, p_{ij}/L, at station -					
	i = 1	i = 2	i = 3	i = 4	i = 5	i = 6
1	-0.2238	-0.0331	-0.0081	-0.0029	-0.0013	-0.0007
2	-.0364	-.0329	-.0143	-.0064	-.0032	-.0017
3	-.0062	-.0148	-.0110	-.0065	-.0037	-.0022
4	.0011	-.0059	-.0064	-.0048	-.0032	-.0021
5	.0037	-.0017	-.0030	-.0029	-.0022	-.0016
6	.0047	.0006	-.0009	-.0013	-.0012	-.0010
7	.0049	.0018	.0004	-.0001	-.0004	-.0004
8	.0047	.0026	.0014	.0007	.0003	.0000
9	.0043	.0030	.0020	.0012	.0008	.0004
10	.0036	.0031	.0022	.0015	.0011	.0007
11	.0029	.0031	.0024	.0017	.0012	.0009
12	.0022	.0030	.0024	.0018	.0013	.0009
13	.0016	.0027	.0022	.0017	.0013	.0009
14	.0011	.0023	.0020	.0015	.0011	.0009
15	.0007	.0019	.0016	.0013	.0010	.0007
16	.0004	.0014	.0012	.0009	.0007	.0006
17	.0002	.0008	.0007	.0006	.0004	.0003
18	.0000	.0003	.0002	.0002	.0002	.0001

j	Shear flow, q_{ij}, at station -					
	i = 0	i = 1	i = 2	i = 3	i = 4	i = 5
0	0.5271	0.1659	0.0390	0.0147	0.0070	0.0038
1	-.0254	-.0247	.0140	.0095	.0054	.0031
2	.0473	-.0282	-.0046	.0017	.0021	.0016
3	.0598	-.0196	-.0084	-.0028	-.0006	.0001
4	.0576	-.0126	-.0080	-.0043	-.0022	-.0010
5	.0502	-.0072	-.0066	-.0045	-.0028	-.0016
6	.0408	-.0031	-.0051	-.0040	-.0029	-.0018
7	.0309	.0000	-.0038	-.0034	-.0027	-.0018
8	.0214	.0022	-.0026	-.0027	-.0022	-.0015
9	.0129	.0034	-.0016	-.0020	-.0018	-.0012
10	.0057	.0039	-.0007	-.0013	-.0013	-.0009
11	-.0001	.0037	.0000	-.0006	-.0007	-.0005
12	-.0046	.0029	.0006	.0000	-.0002	-.0001
13	-.0078	.0018	.0010	.0005	.0003	.0002
14	-.0100	.0006	.0013	.0010	.0008	.0005
15	-.0114	-.0006	.0015	.0013	.0011	.0007
16	-.0122	-.0016	.0016	.0016	.0014	.0009
17	-.0126	-.0022	.0017	.0018	.0016	.0010
18	-.0127	-.0024	.0017	.0018	.0016	.0010

TABLE 8.- LOAD DISTRIBUTION DUE TO A UNIT PERTURBATION LOAD

$[B = 100;\ C = 2 \times 10^2;\ m = 36]$

(a) Concentrated perturbation load on stringer $j = 0$ at ring $i = 0$

j	Stringer load, p_{ij}, at station -						
	i = 0	i = 1	i = 2	i = 3	i = 4	i = 5	i = 6
0	0.5000	0.2548	0.1528	0.1062	0.0825	0.0692	0.0611
1	0	.0699	.0800	.0750	.0678	.0615	.0566
2	0	.0241	.0391	.0460	.0483	.0484	.0475
3	0	.0124	.0225	.0297	.0342	.0369	.0383
4	0	.0079	.0149	.0206	.0250	.0283	.0306
5	0	.0055	.0106	.0151	.0189	.0219	.0243
6	0	.0041	.0079	.0113	.0144	.0170	.0191
7	0	.0030	.0058	.0084	.0108	.0129	.0147
8	0	.0021	.0042	.0061	.0079	.0095	.0109
9	0	.0014	.0028	.0040	.0053	.0064	.0075
10	0	.0007	.0015	.0022	.0030	.0037	.0044
11	0	.0002	.0004	.0006	.0009	.0012	.0015
12	0	-.0004	-.0006	-.0008	-.0009	-.0010	-.0010
13	0	-.0008	-.0015	-.0021	-.0025	-.0029	-.0032
14	0	-.0012	-.0023	-.0032	-.0039	-.0045	-.0050
15	0	-.0015	-.0029	-.0040	-.0050	-.0058	-.0065
16	0	-.0018	-.0033	-.0046	-.0058	-.0068	-.0076
17	0	-.0019	-.0036	-.0050	-.0063	-.0074	-.0083
18	0	-.0020	-.0037	-.0052	-.0064	-.0076	-.0085

j	Shear flow, $q_{ij}L$, at station -					
	i = 0	i = 1	i = 2	i = 3	i = 4	i = 5
0	0.1226	0.0510	0.0233	0.0119	0.0066	0.0041
1	.0527	.0409	.0283	.0191	.0129	.0089
2	.0286	.0259	.0214	.0168	.0129	.0098
3	.0162	.0157	.0142	.0123	.0102	.0083
4	.0083	.0087	.0085	.0079	.0070	.0060
5	.0028	.0036	.0040	.0041	.0040	.0036
6	-.0013	-.0002	.0006	.0011	.0014	.0015
7	-.0043	-.0030	-.0020	-.0013	-.0007	-.0003
8	-.0064	-.0051	-.0040	-.0031	-.0023	-.0018
9	-.0078	-.0064	-.0053	-.0043	-.0035	-.0028
10	-.0085	-.0072	-.0060	-.0050	-.0042	-.0035
11	-.0087	-.0074	-.0063	-.0053	-.0045	-.0038
12	-.0083	-.0071	-.0061	-.0052	-.0044	-.0038
13	-.0074	-.0064	-.0055	-.0048	-.0041	-.0035
14	-.0062	-.0054	-.0047	-.0040	-.0034	-.0030
15	-.0047	-.0041	-.0035	-.0030	-.0026	-.0022
16	-.0029	-.0025	-.0022	-.0019	-.0016	-.0014
17	-.0010	-.0009	-.0007	-.0006	-.0006	-.0005

TABLE 8.- LOAD DISTRIBUTION DUE TO A UNIT PERTURBATION LOAD - Continued

[B = 100; C = 2 × 10²; m = 36]

(b) Distributed perturbation load on stringer j = 0 between rings i = 0 and i = 1

j	Stringer load, p_{ij}, at station -					
	i = 1	i = 2	i = 3	i = 4	i = 5	i = 6
0	0.3600	0.1972	0.1268	0.0932	0.0753	0.0648
1	.0428	.0770	.0779	.0714	.0645	.0589
2	.0127	.0324	.0431	.0474	.0485	.0480
3	.0063	.0177	.0264	.0321	.0357	.0377
4	.0040	.0115	.0179	.0229	.0267	.0295
5	.0028	.0081	.0129	.0170	.0204	.0231
6	.0020	.0060	.0096	.0129	.0157	.0181
7	.0015	.0044	.0072	.0097	.0119	.0138
8	.0011	.0032	.0051	.0070	.0087	.0102
9	.0007	.0021	.0034	.0047	.0059	.0070
10	.0004	.0011	.0019	.0026	.0033	.0040
11	.0001	.0002	.0005	.0008	.0011	.0014
12	-.0002	-.0005	-.0007	-.0009	-.0010	-.0010
13	-.0004	-.0012	-.0018	-.0023	-.0027	-.0030
14	-.0006	-.0018	-.0027	-.0035	-.0042	-.0048
15	-.0008	-.0022	-.0035	-.0045	-.0054	-.0062
16	-.0009	-.0026	-.0040	-.0052	-.0063	-.0072
17	-.0010	-.0028	-.0043	-.0057	-.0068	-.0078
18	-.0010	-.0028	-.0044	-.0058	-.0070	-.0080

j	Shear flow, $q_{ij}L$, at station -					
	i = 0	i = 1	i = 2	i = 3	i = 4	i = 5
0	0.1400	0.0814	0.0352	0.0168	0.0090	0.0052
1	.0543	.0472	.0343	.0234	.0158	.0108
2	.0289	.0275	.0237	.0191	.0148	.0113
3	.0162	.0161	.0151	.0133	.0112	.0092
4	.0082	.0086	.0087	.0082	.0074	.0065
5	.0026	.0032	.0039	.0041	.0040	.0038
6	-.0015	-.0007	.0002	.0008	.0012	.0014
7	-.0045	-.0036	-.0025	-.0016	-.0010	-.0005
8	-.0066	-.0057	-.0045	-.0035	-.0027	-.0020
9	-.0080	-.0071	-.0058	-.0048	-.0039	-.0031
10	-.0087	-.0078	-.0066	-.0055	-.0046	-.0038
11	-.0089	-.0080	-.0068	-.0058	-.0049	-.0041
12	-.0085	-.0077	-.0066	-.0056	-.0048	-.0041
13	-.0076	-.0069	-.0060	-.0051	-.0044	-.0038
14	-.0064	-.0058	-.0050	-.0043	-.0037	-.0032
15	-.0048	-.0044	-.0038	-.0033	-.0028	-.0024
16	-.0030	-.0027	-.0024	-.0020	-.0018	-.0015
17	-.0010	-.0009	-.0008	-.0007	-.0006	-.0005

TABLE 8.- LOAD DISTRIBUTION DUE TO A UNIT PERTURBATION LOAD - Concluded

$$\left[B = 100;\ C = 2 \times 10^2;\ m = 36\right]$$

(c) Shear perturbation load about shear panel (0,0)

j	Stringer load, p_{ij}/L, at station -					
	i = 1	i = 2	i = 3	i = 4	i = 5	i = 6
1	-0.3166	-0.1198	-0.0485	-0.0214	-0.0103	-0.0055
2	-.0283	-.0433	-.0335	-.0227	-.0148	-.0097
3	-.0035	-.0126	-.0147	-.0133	-.0107	-.0083
4	.0014	-.0034	-.0057	-.0064	-.0062	-.0054
5	.0032	.0001	-.0015	-.0025	-.0029	-.0029
6	.0041	.0018	.0006	-.0002	-.0008	-.0011
7	.0045	.0028	.0019	.0011	.0006	.0002
8	.0046	.0034	.0026	.0020	.0015	.0010
9	.0045	.0037	.0031	.0024	.0020	.0016
10	.0042	.0039	.0033	.0027	.0023	.0019
11	.0039	.0038	.0033	.0028	.0024	.0020
12	.0034	.0036	.0032	.0028	.0024	.0020
13	.0029	.0032	.0029	.0025	.0022	.0019
14	.0024	.0028	.0025	.0022	.0019	.0017
15	.0019	.0023	.0020	.0018	.0016	.0014
16	.0013	.0017	.0015	.0014	.0012	.0010
17	.0008	.0010	.0009	.0008	.0007	.0006
18	.0003	.0003	.0003	.0003	.0002	.0002

j	Shear flow, q_{ij}, at station -					
	i = 0	i = 1	i = 2	i = 3	i = 4	i = 5
0	0.3688	0.1601	0.0703	0.0337	0.0179	0.0104
1	.0020	-.0367	-.0010	.0065	.0068	.0056
2	.0586	-.0217	-.0107	-.0043	-.0010	.0005
3	.0657	-.0126	-.0087	-.0058	-.0035	-.0020
4	.0630	-.0078	-.0064	-.0051	-.0038	-.0027
5	.0566	-.0047	-.0048	-.0041	-.0034	-.0027
6	.0485	-.0025	-.0036	-.0033	-.0028	-.0024
7	.0395	-.0008	-.0027	-.0025	-.0022	-.0020
8	.0303	.0004	-.0019	-.0019	-.0017	-.0015
9	.0213	.0012	-.0012	-.0013	-.0012	-.0011
10	.0128	.0016	-.0006	-.0008	-.0007	-.0007
11	.0050	.0016	-.0001	-.0003	-.0003	-.0003
12	-.0019	.0015	.0003	.0001	.0001	.0000
13	-.0077	.0011	.0006	.0005	.0004	.0003
14	-.0125	.0007	.0009	.0008	.0007	.0006
15	-.0162	.0002	.0012	.0011	.0009	.0008
16	-.0189	-.0001	.0013	.0012	.0011	.0009
17	-.0197	-.0004	.0014	.0013	.0012	.0010
18	-.0202	-.0005	.0015	.0014	.0012	.0010

TABLE 9.- LOAD DISTRIBUTION DUE TO A UNIT PERTURBATION LOAD

$$\left[B = 300;\ C = 2 \times 10^2;\ m = 36\right]$$

(a) Concentrated perturbation load on stringer $j = 0$ at ring $i = 0$

j	Stringer load, p_{ij}, at station -						
	i = 0	i = 1	i = 2	i = 3	i = 4	i = 5	i = 6
0	0.5000	0.3354	0.2366	0.1756	0.1370	0.1116	0.0945
1	0	.0506	.0716	.0782	.0781	.0752	.0713
2	0	.0149	.0271	.0359	.0417	.0453	.0472
3	0	.0074	.0142	.0201	.0250	.0290	.0320
4	0	.0046	.0091	.0132	.0168	.0201	.0228
5	0	.0032	.0064	.0094	.0121	.0147	.0170
6	0	.0024	.0047	.0069	.0090	.0110	.0128
7	0	.0018	.0035	.0051	.0067	.0082	.0096
8	0	.0012	.0025	.0036	.0048	.0059	.0070
9	0	.0008	.0016	.0024	.0032	.0039	.0046
10	0	.0004	.0008	.0013	.0017	.0021	.0026
11	0	.0001	.0002	.0003	.0004	.0006	.0007
12	0	-.0002	-.0004	-.0006	-.0007	-.0008	-.0009
13	0	-.0005	-.0010	-.0014	-.0017	-.0021	-.0023
14	0	-.0007	-.0014	-.0020	-.0026	-.0031	-.0035
15	0	-.0009	-.0018	-.0025	-.0032	-.0039	-.0045
16	0	-.0010	-.0020	-.0029	-.0037	-.0045	-.0052
17	0	-.0011	-.0022	-.0031	-.0040	-.0048	-.0056
18	0	-.0012	-.0022	-.0032	-.0041	-.0050	-.0057

j	Shear flow, $q_{ij}L$, at station -					
	i = 0	i = 1	i = 2	i = 3	i = 4	i = 5
0	0.0823	0.0494	0.0305	0.0193	0.0127	0.0086
1	.0317	.0284	.0239	.0194	.0156	.0125
2	.0168	.0162	.0151	.0136	.0120	.0105
3	.0094	.0094	.0092	.0087	.0081	.0075
4	.0048	.0050	.0051	.0050	.0049	.0047
5	.0015	.0018	.0021	.0022	.0024	.0024
6	-.0009	-.0005	-.0001	.0002	.0004	.0006
7	-.0026	-.0022	-.0018	-.0014	-.0011	-.0009
8	-.0039	-.0034	-.0030	-.0026	-.0022	-.0019
9	-.0047	-.0042	-.0038	-.0034	-.0030	-.0026
10	-.0051	-.0046	-.0042	-.0038	-.0034	-.0031
11	-.0052	-.0047	-.0043	-.0039	-.0036	-.0032
12	-.0049	-.0045	-.0041	-.0038	-.0035	-.0032
13	-.0044	-.0041	-.0037	-.0034	-.0032	-.0029
14	-.0037	-.0034	-.0031	-.0029	-.0026	-.0024
15	-.0028	-.0026	-.0024	-.0022	-.0020	-.0018
16	-.0017	-.0016	-.0015	-.0014	-.0012	-.0011
17	-.0006	-.0005	-.0005	-.0005	-.0004	-.0004

TABLE 9.- LOAD DISTRIBUTION DUE TO A UNIT PERTURBATION LOAD - Continued

$[B = 300;\ C = 2 \times 10^2;\ m = 36]$

(b) Distributed perturbation load on stringer $j = 0$ between rings $i = 0$ and $i = 1$

j	Stringer load, p_{ij}, at station -					
	i = 1	i = 2	i = 3	i = 4	i = 5	i = 6
0	0.4108	0.2820	0.2038	0.1549	0.1234	0.1026
1	.0286	.0628	.0757	.0785	.0768	.0733
2	.0076	.0213	.0318	.0390	.0436	.0464
3	.0037	.0109	.0172	.0227	.0271	.0305
4	.0023	.0069	.0111	.0150	.0185	.0215
5	.0016	.0048	.0079	.0108	.0134	.0158
6	.0012	.0036	.0058	.0080	.0100	.0119
7	.0009	.0026	.0043	.0059	.0074	.0089
8	.0006	.0018	.0031	.0042	.0054	.0064
9	.0004	.0012	.0020	.0028	.0035	.0043
10	.0002	.0006	.0010	.0015	.0019	.0024
11	.0000	.0001	.0002	.0003	.0005	.0006
12	-.0001	-.0004	-.0005	-.0007	-.0008	-.0009
13	-.0003	-.0007	-.0012	-.0016	-.0019	-.0022
14	-.0004	-.0011	-.0017	-.0023	-.0028	-.0033
15	-.0005	-.0014	-.0022	-.0029	-.0036	-.0042
16	-.0005	-.0015	-.0025	-.0033	-.0041	-.0048
17	-.0006	-.0017	-.0027	-.0036	-.0044	-.0052
18	-.0006	-.0017	-.0027	-.0037	-.0046	-.0054

j	Shear flow, $q_{ij}L$, at station -					
	i = 0	i = 1	i = 2	i = 3	i = 4	i = 5
0	0.0892	0.0644	0.0391	0.0244	0.0157	0.0104
1	.0320	.0302	.0262	.0216	.0175	.0140
2	.0168	.0166	.0157	.0144	.0128	.0113
3	.0094	.0094	.0093	.0089	.0084	.0078
4	.0047	.0049	.0050	.0050	.0050	.0048
5	.0014	.0017	.0020	.0022	.0023	.0024
6	-.0010	-.0007	-.0003	.0000	.0003	.0005
7	-.0027	-.0024	-.0020	-.0016	-.0013	-.0010
8	-.0040	-.0036	-.0032	-.0028	-.0024	-.0021
9	-.0048	-.0044	-.0040	-.0036	-.0032	-.0028
10	-.0052	-.0049	-.0044	-.0040	-.0036	-.0032
11	-.0052	-.0049	-.0045	-.0041	-.0037	-.0034
12	-.0050	-.0047	-.0043	-.0040	-.0036	-.0033
13	-.0045	-.0042	-.0039	-.0036	-.0033	-.0030
14	-.0037	-.0035	-.0033	-.0030	-.0028	-.0025
15	-.0028	-.0026	-.0024	-.0023	-.0021	-.0019
16	-.0017	-.0016	-.0015	-.0014	-.0013	-.0012
17	-.0006	-.0006	-.0005	-.0005	-.0004	-.0004

TABLE 9.- LOAD DISTRIBUTION DUE TO A UNIT PERTURBATION LOAD - Concluded

$$\left[B = 300;\ C = 2 \times 10^2;\ m = 36\right]$$

(c) Shear perturbation load about shear panel (0,0)

j	Stringer load, p_{ij}/L, at station -					
	i = 1	i = 2	i = 3	i = 4	i = 5	i = 6
1	-0.3817	-0.2188	-0.1276	-0.0759	-0.0462	-0.0288
2	-.0195	-.0402	-.0427	-.0383	-.0319	-.0256
3	-.0016	-.0084	-.0125	-.0143	-.0145	-.0138
4	.0017	-.0012	-.0033	-.0049	-.0058	-.0063
5	.0031	.0014	.0002	-.0008	-.0016	-.0022
6	.0038	.0027	.0019	.0012	.0006	.0000
7	.0043	.0034	.0029	.0023	.0018	.0014
8	.0046	.0039	.0034	.0030	.0026	.0022
9	.0046	.0042	.0038	.0034	.0030	.0027
10	.0045	.0042	.0039	.0035	.0032	.0029
11	.0043	.0042	.0038	.0035	.0032	.0030
12	.0040	.0039	.0036	.0034	.0031	.0029
13	.0035	.0036	.0033	.0031	.0029	.0026
14	.0029	.0031	.0029	.0027	.0025	.0023
15	.0024	.0025	.0023	.0022	.0020	.0019
16	.0018	.0019	.0017	.0016	.0015	.0014
17	.0011	.0011	.0011	.0010	.0009	.0009
18	.0004	.0004	.0004	.0003	.0003	.0003

j	Shear flow, q_{ij}, at station -					
	i = 0	i = 1	i = 2	i = 3	i = 4	i = 5
0	0.2639	0.1277	0.0782	0.0489	0.0315	0.0209
1	.0272	-.0351	-.0130	-.0028	.0017	.0035
2	.0663	-.0144	-.0105	-.0073	-.0046	-.0027
3	.0694	-.0076	-.0064	-.0054	-.0044	-.0035
4	.0659	-.0047	-.0043	-.0039	-.0034	-.0030
5	.0598	-.0030	-.0031	-.0029	-.0027	-.0024
6	.0521	-.0018	-.0023	-.0022	-.0020	-.0019
7	.0434	-.0009	-.0017	-.0016	-.0015	-.0015
8	.0343	-.0003	-.0012	-.0012	-.0011	-.0011
9	.0251	.0002	-.0008	-.0008	-.0008	-.0007
10	.0160	.0004	-.0004	-.0004	-.0004	-.0004
11	.0073	.0006	-.0001	-.0001	-.0001	-.0002
12	-.0006	.0006	.0002	.0001	.0001	.0001
13	-.0077	.0006	.0004	.0004	.0003	.0003
14	-.0137	.0005	.0006	.0006	.0005	.0005
15	-.0185	.0004	.0008	.0007	.0007	.0006
16	-.0220	.0003	.0009	.0008	.0008	.0007
17	-.0241	.0002	.0010	.0009	.0008	.0008
18	-.0248	.0002	.0010	.0010	.0009	.0008

TABLE 10.- LOAD DISTRIBUTION DUE TO A UNIT PERTURBATION LOAD

$$\left[B = 1{,}000;\ C = 2 \times 10^2;\ m = 36\right]$$

(a) Concentrated perturbation load on stringer $j = 0$ at ring $i = 0$

j	Stringer load, p_{ij}, at station -						
	i = 0	i = 1	i = 2	i = 3	i = 4	i = 5	i = 6
0	0.5000	0.4001	0.3248	0.2676	0.2237	0.1900	0.1637
1	0	.0323	.0530	.0657	.0731	.0769	.0783
2	0	.0084	.0162	.0232	.0290	.0338	.0378
3	0	.0041	.0081	.0119	.0154	.0187	.0216
4	0	.0026	.0051	.0075	.0099	.0121	.0143
5	0	.0018	.0036	.0053	.0070	.0086	.0102
6	0	.0013	.0026	.0039	.0051	.0064	.0075
7	0	.0010	.0019	.0029	.0038	.0047	.0056
8	0	.0007	.0014	.0020	.0027	.0033	.0040
9	0	.0004	.0009	.0013	.0018	.0022	.0026
10	0	.0002	.0004	.0007	.0009	.0012	.0014
11	0	.0000	.0001	.0001	.0002	.0002	.0003
12	0	-.0001	-.0003	-.0004	-.0005	-.0006	-.0006
13	0	-.0003	-.0006	-.0008	-.0010	-.0013	-.0015
14	0	-.0004	-.0008	-.0012	-.0015	-.0019	-.0022
15	0	-.0005	-.0010	-.0015	-.0019	-.0023	-.0027
16	0	-.0006	-.0011	-.0017	-.0022	-.0027	-.0032
17	0	-.0006	-.0012	-.0018	-.0024	-.0029	-.0034
18	0	-.0006	-.0013	-.0018	-.0024	-.0030	-.0035

j	Shear flow, $q_{ij}L$, at station -					
	i = 0	i = 1	i = 2	i = 3	i = 4	i = 5
0	0.0499	0.0377	0.0286	0.0219	0.0169	0.0132
1	.0177	.0170	.0159	.0145	.0131	.0118
2	.0092	.0092	.0090	.0087	.0083	.0079
3	.0051	.0052	.0052	.0051	.0050	.0049
4	.0026	.0027	.0027	.0028	.0028	.0028
5	.0008	.0009	.0010	.0011	.0011	.0012
6	-.0005	-.0004	-.0003	-.0002	-.0001	.0000
7	-.0015	-.0014	-.0012	-.0011	-.0010	-.0009
8	-.0022	-.0020	-.0019	-.0018	-.0016	-.0015
9	-.0026	-.0025	-.0023	-.0022	-.0021	-.0019
10	-.0029	-.0027	-.0026	-.0024	-.0023	-.0022
11	-.0029	-.0028	-.0026	-.0025	-.0024	-.0022
12	-.0028	-.0026	-.0025	-.0024	-.0023	-.0022
13	-.0025	-.0024	-.0022	-.0022	-.0020	-.0020
14	-.0020	-.0020	-.0019	-.0018	-.0017	-.0016
15	-.0015	-.0015	-.0014	-.0014	-.0013	-.0012
16	-.0010	-.0009	-.0009	-.0008	-.0008	-.0008
17	-.0003	-.0003	-.0003	-.0003	-.0003	-.0003

TABLE 10.- LOAD DISTRIBUTION DUE TO A UNIT PERTURBATION LOAD - Continued

$$\left[B = 1{,}000;\ C = 2 \times 10^2;\ m = 36\right]$$

(b) Distributed perturbation load on stringer $j = 0$ between rings $i = 0$ and $i = 1$

j	Stringer load, p_{ij}, at station -					
	i = 1	i = 2	i = 3	i = 4	i = 5	i = 6
0	0.4477	0.3607	0.2949	0.2447	0.2061	0.1763
1	.0173	.0434	.0599	.0698	.0752	.0777
2	.0042	.0124	.0198	.0262	.0315	.0359
3	.0021	.0061	.0100	.0137	.0171	.0202
4	.0013	.0038	.0063	.0087	.0110	.0132
5	.0009	.0027	.0044	.0061	.0078	.0094
6	.0007	.0020	.0032	.0045	.0058	.0070
7	.0005	.0014	.0024	.0033	.0042	.0051
8	.0003	.0010	.0017	.0024	.0030	.0037
9	.0002	.0007	.0011	.0015	.0020	.0024
10	.0001	.0003	.0006	.0008	.0010	.0013
11	.0000	.0000	.0001	.0002	.0002	.0003
12	-.0001	-.0002	-.0003	-.0004	-.0005	-.0006
13	-.0001	-.0004	-.0007	-.0009	-.0012	-.0014
14	-.0002	-.0006	-.0010	-.0014	-.0017	-.0020
15	-.0003	-.0008	-.0012	-.0017	-.0021	-.0025
16	-.0003	-.0009	-.0014	-.0019	-.0024	-.0029
17	-.0003	-.0009	-.0015	-.0021	-.0026	-.0032
18	-.0003	-.0010	-.0016	-.0021	-.0027	-.0032

j	Shear flow, $q_{ij}L$, at station -					
	i = 0	i = 1	i = 2	i = 3	i = 4	i = 5
0	0.0523	0.0435	0.0329	0.0251	0.0193	0.0149
1	.0177	.0174	.0164	.0152	.0138	.0124
2	.0092	.0092	.0091	.0088	.0085	.0081
3	.0051	.0052	.0052	.0051	.0051	.0050
4	.0026	.0026	.0027	.0027	.0028	.0028
5	.0008	.0008	.0009	.0010	.0011	.0012
6	-.0006	-.0005	-.0004	-.0002	-.0001	.0000
7	-.0015	-.0014	-.0013	-.0012	-.0010	-.0009
8	-.0022	-.0021	-.0020	-.0018	-.0017	-.0016
9	-.0027	-.0026	-.0024	-.0023	-.0021	-.0020
10	-.0029	-.0028	-.0026	-.0025	-.0024	-.0022
11	-.0029	-.0028	-.0027	-.0026	-.0024	-.0023
12	-.0028	-.0027	-.0026	-.0024	-.0023	-.0022
13	-.0025	-.0024	-.0023	-.0022	-.0021	-.0020
14	-.0021	-.0020	-.0019	-.0018	-.0018	-.0017
15	-.0016	-.0015	-.0014	-.0014	-.0013	-.0013
16	-.0010	-.0009	-.0009	-.0008	-.0008	-.0008
17	-.0003	-.0003	-.0003	-.0003	-.0003	-.0003

TABLE 10.- LOAD DISTRIBUTION DUE TO A UNIT PERTURBATION LOAD - Concluded

$$\left[B = 1{,}000;\ C = 2 \times 10^2;\ m = 36\right]$$

(c) Shear perturbation load about shear panel (0,0)

j	Stringer load, p_{ij}/L, at station -					
	i = 1	i = 2	i = 3	i = 4	i = 5	i = 6
1	-0.4300	-0.3169	-0.2346	-0.1745	-0.1305	-0.0981
2	-.0117	-.0297	-.0388	-.0424	-.0425	-.0406
3	.0000	-.0043	-.0077	-.0104	-.0124	-.0136
4	.0021	.0005	-.0009	-.0022	-.0033	-.0042
5	.0031	.0023	.0015	.0008	.0002	-.0004
6	.0038	.0033	.0028	.0023	.0019	.0015
7	.0043	.0039	.0035	.0032	.0029	.0026
8	.0046	.0043	.0040	.0037	.0035	.0032
9	.0047	.0045	.0042	.0040	.0038	.0036
10	.0047	.0045	.0043	.0041	.0039	.0037
11	.0045	.0044	.0042	.0040	.0038	.0037
12	.0042	.0041	.0040	.0038	.0036	.0035
13	.0038	.0037	.0036	.0035	.0033	.0032
14	.0033	.0032	.0031	.0030	.0029	.0028
15	.0026	.0026	.0025	.0024	.0024	.0023
16	.0019	.0019	.0019	.0018	.0017	.0017
17	.0012	.0012	.0011	.0011	.0011	.0010
18	.0004	.0004	.0004	.0004	.0004	.0004

j	Shear flow, q_{ij}, at station -					
	i = 0	i = 1	i = 2	i = 3	i = 4	i = 5
0	0.1885	0.0867	0.0658	0.0502	0.0386	0.0299
1	.0485	-.0264	-.0165	-.0099	-.0055	-.0025
2	.0720	-.0084	-.0074	-.0064	-.0054	-.0044
3	.0721	-.0042	-.0039	-.0037	-.0034	-.0031
4	.0678	-.0026	-.0025	-.0024	-.0023	-.0022
5	.0615	-.0017	-.0018	-.0017	-.0017	-.0016
6	.0539	-.0011	-.0013	-.0013	-.0012	-.0012
7	.0453	-.0007	-.0009	-.0010	-.0009	-.0009
8	.0362	-.0004	-.0007	-.0007	-.0007	-.0006
9	.0267	-.0001	-.0004	-.0004	-.0004	-.0004
10	.0174	.0000	-.0002	-.0002	-.0002	-.0002
11	.0083	.0002	.0000	-.0001	-.0001	-.0001
12	-.0001	.0003	.0001	.0001	.0001	.0001
13	-.0077	.0003	.0003	.0002	.0002	.0002
14	-.0143	.0004	.0004	.0004	.0003	.0003
15	-.0195	.0004	.0005	.0004	.0004	.0004
16	-.0234	.0004	.0006	.0005	.0005	.0005
17	-.0258	.0004	.0006	.0006	.0005	.0005
18	-.0266	.0004	.0006	.0006	.0006	.0005

TABLE 11.- LOAD DISTRIBUTION DUE TO A UNIT PERTURBATION LOAD

$$\left[B = 8;\ C = 2 \times 10^3;\ m = 36\right]$$

(a) Concentrated perturbation load on stringer $j = 0$ at ring $i = 0$

j	Stringer load, p_{ij}, at station -						
	i = 0	i = 1	i = 2	i = 3	i = 4	i = 5	i = 6
0	0.5000	0.0558	0.0620	0.0488	0.0448	0.0426	0.0421
1	0	.0969	.0542	.0485	.0441	.0421	.0416
2	0	.0563	.0517	.0452	.0424	.0407	.0403
3	0	.0352	.0429	.0410	.0394	.0384	.0381
4	0	.0225	.0337	.0357	.0356	.0353	.0352
5	0	.0140	.0253	.0297	.0311	.0316	.0316
6	0	.0081	.0181	.0237	.0262	.0273	.0276
7	0	.0040	.0121	.0178	.0210	.0227	.0231
8	0	.0014	.0072	.0124	.0159	.0179	.0184
9	0	-.0002	.0033	.0076	.0109	.0129	.0135
10	0	-.0012	.0004	.0035	.0063	.0082	.0087
11	0	-.0017	-.0017	.0001	.0022	.0036	.0041
12	0	-.0019	-.0031	-.0025	-.0014	-.0004	-.0002
13	0	-.0020	-.0039	-.0046	-.0044	-.0042	-.0040
14	0	-.0020	-.0044	-.0060	-.0068	-.0072	-.0073
15	0	-.0021	-.0046	-.0070	-.0087	-.0097	-.0100
16	0	-.0021	-.0047	-.0076	-.0100	-.0114	-.0120
17	0	-.0021	-.0048	-.0080	-.0107	-.0126	-.0132
18	0	-.0021	-.0048	-.0081	-.0110	-.0128	-.0136

j	Shear flow, $q_{ij}L$, at station -					
	i = 0	i = 1	i = 2	i = 3	i = 4	i = 5
0	0.2221	-0.0031	0.0066	0.0020	0.0011	0.0003
1	.1252	.0396	.0122	.0064	.0031	.0007
2	.0689	.0443	.0186	.0093	.0048	.0011
3	.0337	.0367	.0205	.0109	.0058	.0014
4	.0112	.0255	.0184	.0109	.0061	.0015
5	-.0028	.0141	.0141	.0095	.0056	.0015
6	-.0109	.0040	.0086	.0070	.0044	.0013
7	-.0149	-.0040	.0029	.0038	.0028	.0009
8	-.0163	-.0097	-.0024	.0004	.0008	.0005
9	-.0161	-.0132	-.0068	-.0029	-.0012	-.0002
10	-.0149	-.0148	-.0100	-.0057	-.0031	-.0007
11	-.0132	-.0147	-.0118	-.0077	-.0045	-.0013
12	-.0113	-.0136	-.0123	-.0088	-.0055	-.0016
13	-.0093	-.0117	-.0117	-.0089	-.0057	-.0018
14	-.0073	-.0093	-.0101	-.0081	-.0053	-.0017
15	-.0052	-.0067	-.0077	-.0064	-.0043	-.0014
16	-.0031	-.0040	-.0049	-.0041	-.0028	-.0009
17	-.0011	-.0013	-.0017	-.0014	-.0009	-.0004

TABLE 11.- LOAD DISTRIBUTION DUE TO A UNIT PERTURBATION LOAD - Continued

$$\left[B = 8;\ C = 2 \times 10^3;\ m = 36\right]$$

(b) Distributed perturbation load on stringer $j = 0$ between rings $i = 0$ and $i = 1$

j	Stringer load, p_{ij}, at station -					
	i = 1	i = 2	i = 3	i = 4	i = 5	i = 6
0	0.1983	0.0635	0.0540	0.0467	0.0435	0.0423
1	.0780	.0693	.0514	.0460	.0431	.0418
2	.0375	.0548	.0480	.0437	.0414	.0404
3	.0207	.0406	.0420	.0402	.0389	.0382
4	.0119	.0293	.0350	.0357	.0355	.0352
5	.0066	.0204	.0279	.0305	.0314	.0316
6	.0033	.0135	.0212	.0251	.0268	.0274
7	.0012	.0082	.0152	.0196	.0220	.0229
8	.0001	.0042	.0099	.0143	.0169	.0182
9	-.0005	.0013	.0055	.0094	.0121	.0134
10	-.0008	-.0007	.0019	.0050	.0072	.0086
11	-.0009	-.0019	-.0009	.0012	.0031	.0040
12	-.0009	-.0027	-.0029	-.0020	-.0010	-.0002
13	-.0009	-.0031	-.0043	-.0045	-.0042	-.0040
14	-.0009	-.0033	-.0053	-.0065	-.0071	-.0073
15	-.0010	-.0033	-.0059	-.0079	-.0092	-.0099
16	-.0010	-.0033	-.0062	-.0089	-.0108	-.0118
17	-.0010	-.0033	-.0064	-.0094	-.0116	-.0130
18	-.0010	-.0033	-.0064	-.0096	-.0121	-.0134

j	Shear flow, $q_{ij}L$, at station -					
	i = 0	i = 1	i = 2	i = 3	i = 4	i = 5
0	0.3017	0.0674	0.0047	0.0037	0.0016	0.0006
1	.1457	.0761	.0225	.0091	.0046	.0019
2	.0706	.0589	.0293	.0134	.0068	.0028
3	.0293	.0390	.0279	.0152	.0081	.0035
4	.0055	.0216	.0223	.0145	.0083	.0038
5	-.0077	.0078	.0148	.0118	.0075	.0036
6	-.0143	-.0025	.0071	.0080	.0057	.0030
7	-.0168	-.0095	.0001	.0036	.0033	.0020
8	-.0169	-.0136	-.0057	-.0007	.0007	.0008
9	-.0158	-.0155	-.0099	-.0046	-.0020	-.0005
10	-.0142	-.0156	-.0125	-.0077	-.0042	-.0018
11	-.0124	-.0146	-.0135	-.0097	-.0061	-.0028
12	-.0106	-.0128	-.0133	-.0107	-.0071	-.0036
13	-.0088	-.0106	-.0121	-.0105	-.0074	-.0038
14	-.0070	-.0082	-.0100	-.0093	-.0067	-.0037
15	-.0051	-.0058	-.0075	-.0073	-.0054	-.0030
16	-.0031	-.0035	-.0046	-.0046	-.0035	-.0020
17	-.0011	-.0012	-.0016	-.0016	-.0012	-.0006

TABLE 11.- LOAD DISTRIBUTION DUE TO A UNIT PERTURBATION LOAD - Concluded

$$\left[B = 8;\ C = 2 \times 10^3;\ m = 36\right]$$

(c) Shear perturbation load about shear panel (0,0)

j	Stringer load, p_{ij}/L, at station -					
	i = 1	i = 2	i = 3	i = 4	i = 5	i = 6
1	-0.1165	0.0067	-0.0020	-0.0002	-0.0002	-0.0001
2	-.0301	-.0116	-.0018	-.0011	-.0005	-.0003
3	-.0026	-.0094	-.0032	-.0014	-.0008	-.0004
4	.0063	-.0048	-.0031	-.0016	-.0009	-.0005
5	.0083	-.0013	-.0022	-.0015	-.0009	-.0006
6	.0072	.0011	-.0011	-.0011	-.0008	-.0005
7	.0050	.0023	-.0001	-.0007	-.0006	-.0004
8	.0027	.0027	.0006	-.0002	-.0003	-.0003
9	.0008	.0024	.0011	.0003	.0000	-.0001
10	-.0005	.0018	.0013	.0006	.0002	.0001
11	-.0011	.0011	.0012	.0008	.0005	.0003
12	-.0012	.0004	.0010	.0009	.0006	.0004
13	-.0010	-.0001	.0008	.0009	.0008	.0005
14	-.0007	-.0005	.0005	.0008	.0008	.0005
15	-.0004	-.0006	.0002	.0007	.0007	.0005
16	-.0002	-.0006	.0001	.0005	.0005	.0004
17	-.0001	-.0004	.0000	.0003	.0003	.0003
18	.0000	-.0001	.0000	.0001	.0001	.0001

j	Shear flow, q_{ij}, at station -					
	i = 0	i = 1	i = 2	i = 3	i = 4	i = 5
0	0.7534	0.1124	0.0025	0.0041	0.0016	0.0010
1	-.0137	-.0108	.0112	.0023	.0016	.0010
2	.0464	-.0293	.0014	.0016	.0010	.0007
3	.0517	-.0225	-.0049	-.0001	.0004	.0004
4	.0390	-.0113	-.0067	-.0017	-.0003	.0000
5	.0224	-.0018	-.0057	-.0024	-.0008	-.0003
6	.0081	.0043	-.0036	-.0024	-.0012	-.0006
7	-.0019	.0070	-.0012	-.0019	-.0012	-.0008
8	-.0072	.0070	.0009	-.0010	-.0011	-.0008
9	-.0087	.0054	.0022	-.0002	-.0008	-.0008
10	-.0078	.0031	.0027	.0005	-.0004	-.0007
11	-.0057	.0009	.0026	.0009	-.0001	-.0005
12	-.0033	-.0007	.0020	.0010	.0002	-.0002
13	-.0013	-.0016	.0011	.0009	.0003	.0000
14	.0000	-.0018	.0001	.0005	.0004	.0002
15	.0008	-.0016	-.0007	.0001	.0004	.0004
16	.0012	-.0012	-.0014	-.0003	.0004	.0005
17	.0014	-.0008	-.0018	-.0006	.0004	.0006
18	.0014	-.0007	-.0020	-.0008	.0003	.0006

TABLE 12.- LOAD DISTRIBUTION DUE TO A UNIT PERTURBATION LOAD

$$\left[B = 30;\ C = 2 \times 10^3;\ m = 36\right]$$

(a) Concentrated perturbation load on stringer $j = 0$ at ring $i = 0$

j	Stringer load, p_{ij}, at station -						
	i = 0	i = 1	i = 2	i = 3	i = 4	i = 5	i = 6
0	0.5000	0.1538	0.0869	0.0648	0.0547	0.0494	0.0463
1	0	.0885	.0727	.0599	.0525	.0481	.0454
2	0	.0387	.0501	.0493	.0467	.0445	.0429
3	0	.0216	.0339	.0385	.0397	.0396	.0392
4	0	.0137	.0229	.0298	.0328	.0342	.0348
5	0	.0091	.0172	.0229	.0266	.0287	.0300
6	0	.0061	.0124	.0175	.0211	.0235	.0251
7	0	.0039	.0087	.0129	.0162	.0186	.0203
8	0	.0023	.0057	.0091	.0119	.0140	.0156
9	0	.0011	.0033	.0058	.0080	.0097	.0111
10	0	.0001	.0013	.0029	.0045	.0057	.0068
11	0	-.0006	-.0003	.0005	.0014	.0022	.0029
12	0	-.0011	-.0016	-.0016	-.0013	-.0010	-.0007
13	0	-.0015	-.0026	-.0032	-.0036	-.0038	-.0039
14	0	-.0017	-.0033	-.0046	-.0055	-.0061	-.0066
15	0	-.0019	-.0039	-.0056	-.0070	-.0080	-.0087
16	0	-.0021	-.0043	-.0063	-.0080	-.0093	-.0103
17	0	-.0021	-.0045	-.0068	-.0086	-.0101	-.0112
18	0	-.0021	-.0046	-.0069	-.0088	-.0104	-.0116

j	Shear flow, $q_{ij}L$, at station -					
	i = 0	i = 1	i = 2	i = 3	i = 4	i = 5
0	0.1731	0.0334	0.0111	0.0050	0.0027	0.0015
1	.0846	.0493	.0239	.0125	.0070	.0042
2	.0459	.0380	.0247	.0151	.0092	.0059
3	.0243	.0257	.0200	.0139	.0093	.0062
4	.0106	.0155	.0141	.0110	.0079	.0057
5	.0015	.0074	.0084	.0073	.0058	.0044
6	-.0046	.0011	.0034	.0037	.0033	.0028
7	-.0085	-.0037	-.0008	.0004	.0009	.0011
8	-.0108	-.0071	-.0042	-.0023	-.0012	-.0005
9	-.0119	-.0094	-.0067	-.0045	-.0030	-.0019
10	-.0120	-.0106	-.0083	-.0060	-.0042	-.0030
11	-.0115	-.0109	-.0090	-.0069	-.0050	-.0037
12	-.0104	-.0104	-.0091	-.0071	-.0053	-.0040
13	-.0089	-.0094	-.0084	-.0067	-.0051	-.0040
14	-.0072	-.0078	-.0071	-.0058	-.0045	-.0035
15	-.0053	-.0058	-.0054	-.0045	-.0035	-.0028
16	-.0032	-.0036	-.0034	-.0028	-.0022	-.0017
17	-.0011	-.0012	-.0011	-.0009	-.0008	-.0006

TABLE 12.- LOAD DISTRIBUTION DUE TO A UNIT PERTURBATION LOAD - Continued

$$\left[B = 30;\ C = 2 \times 10^3;\ m = 36\right]$$

(b) Distributed perturbation load on stringer $j = 0$ between rings $i = 0$ and $i = 1$

j	Stringer load, p_{ij}, at station -					
	i = 1	i = 2	i = 3	i = 4	i = 5	i = 6
0	0.2863	0.1144	0.0744	0.0592	0.0517	0.0476
1	.0616	.0807	.0658	.0559	.0502	.0465
2	.0222	.0461	.0500	.0480	.0456	.0435
3	.0115	.0286	.0367	.0393	.0396	.0393
4	.0070	.0192	.0271	.0315	.0337	.0345
5	.0045	.0134	.0203	.0249	.0275	.0294
6	.0029	.0093	.0151	.0194	.0226	.0244
7	.0018	.0063	.0109	.0146	.0173	.0196
8	.0010	.0040	.0074	.0105	.0130	.0150
9	.0004	.0021	.0046	.0069	.0089	.0106
10	.0000	.0007	.0021	.0037	.0050	.0065
11	-.0004	-.0005	.0001	.0009	.0018	.0027
12	-.0006	-.0014	-.0016	-.0015	-.0012	-.0008
13	-.0007	-.0021	-.0029	-.0034	-.0038	-.0038
14	-.0009	-.0026	-.0040	-.0051	-.0058	-.0064
15	-.0009	-.0029	-.0048	-.0063	-.0075	-.0084
16	-.0010	-.0032	-.0053	-.0072	-.0087	-.0099
17	-.0010	-.0033	-.0057	-.0077	-.0093	-.0108
18	-.0010	-.0034	-.0058	-.0079	-.0098	-.0112

j	Shear flow, $q_{ij}L$, at station -					
	i = 0	i = 1	i = 2	i = 3	i = 4	i = 5
0	0.2137	0.0860	0.0200	0.0076	0.0038	0.0020
1	.0906	.0669	.0349	.0175	.0094	.0057
2	.0461	.0431	.0310	.0195	.0119	.0078
3	.0231	.0260	.0229	.0169	.0116	.0080
4	.0091	.0138	.0150	.0126	.0093	.0073
5	.0000	.0049	.0081	.0080	.0067	.0054
6	-.0058	-.0015	.0024	.0037	.0035	.0035
7	-.0094	-.0060	-.0022	-.0001	.0008	.0012
8	-.0113	-.0090	-.0057	-.0031	-.0017	-.0007
9	-.0121	-.0108	-.0081	-.0055	-.0038	-.0024
10	-.0120	-.0115	-.0095	-.0071	-.0051	-.0038
11	-.0113	-.0114	-.0101	-.0079	-.0060	-.0047
12	-.0102	-.0106	-.0099	-.0081	-.0062	-.0050
13	-.0087	-.0093	-.0090	-.0076	-.0059	-.0050
14	-.0070	-.0076	-.0076	-.0065	-.0052	-.0044
15	-.0051	-.0056	-.0057	-.0050	-.0040	-.0035
16	-.0031	-.0034	-.0036	-.0031	-.0029	-.0022
17	-.0010	-.0011	-.0012	-.0010	-.0009	-.0007

TABLE 12.- LOAD DISTRIBUTION DUE TO A UNIT PERTURBATION LOAD - Concluded

$$\left[B = 30;\ C = 2 \times 10^3;\ m = 36\right]$$

(c) Shear perturbation load about shear panel (0,0)

j	Stringer load, p_{ij}/L, at station -					
	i = 1	i = 2	i = 3	i = 4	i = 5	i = 6
1	-0.2224	-0.0328	-0.0081	-0.0030	-0.0013	-0.0007
2	-.0326	-.0321	-.0142	-.0066	-.0033	-.0017
3	-.0011	-.0135	-.0108	-.0067	-.0039	-.0022
4	.0066	-.0042	-.0060	-.0050	-.0033	-.0021
5	.0085	.0002	-.0026	-.0030	-.0023	-.0016
6	.0081	.0024	-.0004	-.0014	-.0013	-.0010
7	.0067	.0034	.0010	-.0002	-.0004	-.0004
8	.0049	.0036	.0018	.0007	.0003	.0000
9	.0030	.0034	.0022	.0013	.0008	.0004
10	.0014	.0029	.0023	.0017	.0012	.0007
11	.0002	.0022	.0023	.0019	.0013	.0009
12	-.0006	.0015	.0020	.0019	.0013	.0009
13	-.0011	.0009	.0017	.0018	.0013	.0009
14	-.0012	.0004	.0014	.0016	.0011	.0009
15	-.0012	.0001	.0011	.0013	.0010	.0007
16	-.0009	-.0001	.0007	.0010	.0008	.0006
17	-.0006	-.0001	.0004	.0006	.0004	.0003
18	-.0002	-.0001	.0001	.0002	.0002	.0001

j	Shear flow, q_{ij}, at station -					
	i = 0	i = 1	i = 2	i = 3	i = 4	i = 5
0	0.5569	0.1562	0.0349	0.0131	0.0069	0.0038
1	.0017	-.0333	.0101	.0080	.0052	.0033
2	.0669	-.0338	-.0078	.0004	.0019	.0018
3	.0691	-.0214	-.0106	-.0037	-.0008	.0002
4	.0560	-.0106	-.0088	-.0047	-.0024	-.0009
5	.0390	-.0023	-.0059	-.0043	-.0030	-.0017
6	.0227	.0034	-.0031	-.0033	-.0030	-.0019
7	.0093	.0068	-.0006	-.0022	-.0027	-.0020
8	-.0005	.0080	.0013	-.0011	-.0023	-.0017
9	-.0066	.0077	.0024	-.0002	-.0018	-.0012
10	-.0094	.0062	.0030	.0005	-.0011	-.0007
11	-.0098	.0043	.0029	.0009	-.0004	-.0004
12	-.0085	.0021	.0023	.0010	.0003	-.0001
13	-.0063	.0002	.0015	.0009	.0007	.0003
14	-.0038	-.0015	.0004	.0007	.0011	.0005
15	-.0015	-.0027	-.0006	.0004	.0013	.0007
16	.0004	-.0035	-.0014	.0002	.0014	.0008
17	.0016	-.0040	-.0020	.0000	.0016	.0009
18	.0020	-.0041	-.0022	.0000	.0016	.0010

TABLE 13.- LOAD DISTRIBUTION DUE TO A UNIT PERTURBATION LOAD

$[B = 100;\ C = 2 \times 10^3;\ m = 36]$

(a) Concentrated perturbation load on stringer $j = 0$ at ring $i = 0$

j	Stringer load, p_{ij}, at station -						
	i = 0	i = 1	i = 2	i = 3	i = 4	i = 5	i = 6
0	0.5000	0.2551	0.1532	0.1064	0.0826	0.0692	0.0611
1	0	.0702	.0803	.0752	.0679	.0615	.0566
2	0	.0243	.0394	.0462	.0484	.0484	.0475
3	0	.0126	.0227	.0298	.0343	.0369	.0383
4	0	.0079	.0149	.0207	.0251	.0283	.0306
5	0	.0054	.0106	.0151	.0189	.0219	.0243
6	0	.0039	.0077	.0112	.0143	.0170	.0191
7	0	.0027	.0056	.0083	.0107	.0129	.0147
8	0	.0018	.0039	.0059	.0077	.0095	.0109
9	0	.0011	.0025	.0038	.0051	.0064	.0075
10	0	.0005	.0012	.0020	.0028	.0037	.0044
11	0	-.0001	.0001	.0004	.0008	.0012	.0015
12	0	-.0005	-.0008	-.0010	-.0010	-.0010	-.0010
13	0	-.0009	-.0016	-.0021	-.0026	-.0029	-.0032
14	0	-.0012	-.0022	-.0031	-.0039	-.0045	-.0050
15	0	-.0014	-.0027	-.0039	-.0049	-.0058	-.0065
16	0	-.0016	-.0031	-.0045	-.0056	-.0068	-.0076
17	0	-.0017	-.0033	-.0048	-.0061	-.0074	-.0083
18	0	-.0017	-.0034	-.0049	-.0062	-.0076	-.0085

j	Shear flow, $q_{ij}L$, at station -					
	i = 0	i = 1	i = 2	i = 3	i = 4	i = 5
0	0.1224	0.0510	0.0234	0.0119	0.0066	0.0041
1	.0522	.0410	.0284	.0192	.0130	.0089
2	.0279	.0259	.0216	.0170	.0130	.0098
3	.0153	.0158	.0144	.0124	.0104	.0083
4	.0074	.0088	.0087	.0080	.0071	.0060
5	.0020	.0036	.0042	.0043	.0040	.0036
6	-.0019	-.0002	.0007	.0012	.0014	.0015
7	-.0046	-.0031	-.0020	-.0012	-.0007	-.0003
8	-.0065	-.0051	-.0040	-.0031	-.0024	-.0018
9	-.0076	-.0065	-.0053	-.0044	-.0036	-.0028
10	-.0081	-.0072	-.0061	-.0051	-.0044	-.0035
11	-.0081	-.0074	-.0064	-.0054	-.0047	-.0038
12	-.0075	-.0071	-.0062	-.0054	-.0047	-.0038
13	-.0066	-.0064	-.0057	-.0049	-.0044	-.0035
14	-.0055	-.0053	-.0048	-.0042	-.0037	-.0030
15	-.0041	-.0040	-.0036	-.0032	-.0028	-.0022
16	-.0025	-.0025	-.0022	-.0020	-.0017	-.0014
17	-.0008	-.0008	-.0008	-.0007	-.0005	-.0005

TABLE 13.- LOAD DISTRIBUTION DUE TO A UNIT PERTURBATION LOAD - Continued

$$\left[B = 100;\ C = 2 \times 10^3;\ m = 36\right]$$

(b) Distributed perturbation load on stringer $j = 0$ between rings $i = 0$ and $i = 1$

j	Stringer load, p_{ij}, at station -					
	i = 1	i = 2	i = 3	i = 4	i = 5	i = 6
0	0.3603	0.1976	0.1271	0.0933	0.0753	0.0648
1	.0430	.0773	.0781	.0715	.0645	.0589
2	.0129	.0327	.0433	.0476	.0485	.0480
3	.0064	.0179	.0265	.0322	.0357	.0377
4	.0040	.0115	.0179	.0230	.0267	.0295
5	.0027	.0081	.0129	.0170	.0204	.0231
6	.0019	.0058	.0095	.0128	.0157	.0181
7	.0013	.0042	.0070	.0095	.0119	.0138
8	.0009	.0029	.0049	.0068	.0087	.0102
9	.0005	.0018	.0031	.0045	.0059	.0070
10	.0002	.0008	.0016	.0024	.0033	.0040
11	-.0001	.0000	.0003	.0006	.0011	.0014
12	-.0003	-.0007	-.0009	-.0010	-.0010	-.0010
13	-.0004	-.0012	-.0019	-.0024	-.0027	-.0030
14	-.0006	-.0017	-.0027	-.0035	-.0042	-.0048
15	-.0007	-.0021	-.0033	-.0044	-.0054	-.0062
16	-.0008	-.0023	-.0038	-.0051	-.0063	-.0072
17	-.0008	-.0025	-.0041	-.0055	-.0068	-.0078
18	-.0008	-.0025	-.0042	-.0056	-.0070	-.0080

j	Shear flow, $q_{ij}L$, at station -					
	i = 0	i = 1	i = 2	i = 3	i = 4	i = 5
0	0.1397	0.0813	0.0352	0.0169	0.0090	0.0052
1	.0536	.0470	.0344	.0235	.0159	.0108
2	.0279	.0272	.0238	.0192	.0149	.0113
3	.0150	.0157	.0152	.0135	.0113	.0092
4	.0070	.0082	.0088	.0084	.0075	.0065
5	.0016	.0029	.0039	.0043	.0042	.0038
6	-.0023	-.0010	.0002	.0010	.0014	.0014
7	-.0050	-.0039	-.0025	-.0016	-.0009	-.0005
8	-.0068	-.0058	-.0046	-.0035	-.0027	-.0020
9	-.0078	-.0071	-.0059	-.0048	-.0040	-.0031
10	-.0082	-.0077	-.0067	-.0056	-.0048	-.0038
11	-.0081	-.0078	-.0070	-.0059	-.0052	-.0041
12	-.0076	-.0074	-.0067	-.0058	-.0051	-.0041
13	-.0066	-.0066	-.0061	-.0053	-.0047	-.0038
14	-.0055	-.0055	-.0051	-.0045	-.0039	-.0032
15	-.0041	-.0041	-.0039	-.0034	-.0029	-.0024
16	-.0025	-.0026	-.0024	-.0021	-.0018	-.0015
17	-.0009	-.0009	-.0008	-.0007	-.0006	-.0005

TABLE 13.- LOAD DISTRIBUTION DUE TO A UNIT PERTURBATION LOAD - Concluded

$$\left[B = 100;\ C = 2 \times 10^3;\ m = 36\right]$$

(c) Shear perturbation load about shear panel (0,0)

j	Stringer load, p_{ij}/L, at station -					
	i = 1	i = 2	i = 3	i = 4	i = 5	i = 6
1	-0.3158	-0.1196	-0.0485	-0.0214	-0.0103	-0.0055
2	-.0259	-.0428	-.0335	-.0227	-.0148	-.0097
3	-.0001	-.0119	-.0146	-.0133	-.0107	-.0083
4	.0052	-.0026	-.0056	-.0065	-.0062	-.0054
5	.0069	.0011	-.0013	-.0026	-.0029	-.0029
6	.0072	.0028	.0008	-.0003	-.0008	-.0011
7	.0066	.0036	.0020	.0011	.0006	.0002
8	.0056	.0039	.0027	.0020	.0015	.0010
9	.0043	.0039	.0031	.0025	.0020	.0016
10	.0030	.0037	.0033	.0028	.0023	.0019
11	.0019	.0033	.0032	.0029	.0024	.0020
12	.0009	.0029	.0031	.0028	.0024	.0020
13	.0001	.0023	.0028	.0026	.0022	.0019
14	-.0003	.0019	.0024	.0023	.0019	.0017
15	-.0006	.0014	.0019	.0019	.0016	.0014
16	-.0006	.0009	.0014	.0014	.0012	.0010
17	-.0004	.0006	.0009	.0009	.0007	.0006
18	-.0002	.0002	.0003	.0003	.0002	.0002

j	Shear flow, q_{ij}, at station -					
	i = 0	i = 1	i = 2	i = 3	i = 4	i = 5
0	0.3911	0.1517	0.0679	0.0331	0.0178	0.0104
1	.0226	-.0444	-.0032	.0060	.0067	.0056
2	.0745	-.0275	-.0126	-.0048	-.0011	.0005
3	.0747	-.0157	-.0099	-.0061	-.0036	-.0020
4	.0642	-.0079	-.0068	-.0052	-.0038	-.0027
5	.0504	-.0020	-.0044	-.0040	-.0034	-.0027
6	.0361	.0024	-.0024	-.0030	-.0029	-.0024
7	.0229	.0054	-.0008	-.0021	-.0023	-.0020
8	.0117	.0071	.0004	-.0013	-.0017	-.0015
9	.0030	.0075	.0012	-.0007	-.0012	-.0011
10	-.0031	.0068	.0016	-.0002	-.0007	-.0007
11	-.0068	.0054	.0017	.0002	-.0001	-.0003
12	-.0086	.0034	.0015	.0005	.0002	.0000
13	-.0088	.0012	.0011	.0006	.0005	.0003
14	-.0082	-.0010	.0006	.0007	.0008	.0006
15	-.0070	-.0029	.0000	.0007	.0010	.0008
16	-.0059	-.0045	-.0004	.0008	.0011	.0009
17	-.0051	-.0054	-.0007	.0008	.0012	.0010
18	-.0048	-.0058	-.0008	.0008	.0013	.0010

TABLE 14.- LOAD DISTRIBUTION DUE TO A UNIT PERTURBATION LOAD

$$\left[B = 300;\ C = 2 \times 10^3;\ m = 36\right]$$

(a) Concentrated perturbation load on stringer $j = 0$ at ring $i = 0$

j	Stringer load, p_{ij}, at station -						
	i = 0	i = 1	i = 2	i = 3	i = 4	i = 5	i = 6
0	0.5000	0.3354	0.2366	0.1756	0.1370	0.1116	0.0945
1	0	.0506	.0716	.0782	.0781	.0752	.0713
2	0	.0149	.0271	.0359	.0417	.0453	.0472
3	0	.0074	.0142	.0201	.0250	.0290	.0320
4	0	.0046	.0091	.0132	.0168	.0201	.0228
5	0	.0032	.0064	.0094	.0121	.0147	.0170
6	0	.0024	.0047	.0069	.0090	.0110	.0128
7	0	.0018	.0035	.0051	.0067	.0082	.0096
8	0	.0012	.0025	.0036	.0048	.0059	.0070
9	0	.0008	.0016	.0024	.0032	.0039	.0046
10	0	.0004	.0008	.0013	.0017	.0021	.0026
11	0	.0001	.0002	.0003	.0004	.0006	.0007
12	0	-.0002	-.0004	-.0006	-.0007	-.0008	-.0009
13	0	-.0005	-.0010	-.0014	-.0017	-.0021	-.0023
14	0	-.0007	-.0014	-.0020	-.0026	-.0031	-.0035
15	0	-.0009	-.0018	-.0025	-.0032	-.0039	-.0045
16	0	-.0010	-.0020	-.0029	-.0037	-.0045	-.0052
17	0	-.0011	-.0022	-.0031	-.0040	-.0048	-.0056
18	0	-.0012	-.0022	-.0032	-.0041	-.0050	-.0057

j	Shear flow, $q_{ij}L$, at station -					
	i = 0	i = 1	i = 2	i = 3	i = 4	i = 5
0	0.0823	0.0494	0.0305	0.0193	0.0127	0.0086
1	.0317	.0284	.0239	.0194	.0156	.0125
2	.0168	.0162	.0151	.0136	.0120	.0105
3	.0094	.0094	.0092	.0087	.0081	.0075
4	.0048	.0050	.0051	.0050	.0049	.0047
5	.0015	.0018	.0021	.0022	.0024	.0024
6	-.0009	-.0005	-.0001	.0002	.0004	.0006
7	-.0026	-.0022	-.0018	-.0014	-.0011	-.0009
8	-.0039	-.0034	-.0030	-.0026	-.0022	-.0019
9	-.0047	-.0042	-.0038	-.0034	-.0030	-.0026
10	-.0051	-.0046	-.0042	-.0038	-.0034	-.0031
11	-.0052	-.0047	-.0043	-.0039	-.0036	-.0032
12	-.0049	-.0045	-.0041	-.0038	-.0035	-.0032
13	-.0044	-.0041	-.0037	-.0034	-.0032	-.0029
14	-.0037	-.0034	-.0031	-.0029	-.0026	-.0024
15	-.0028	-.0026	-.0024	-.0022	-.0020	-.0018
16	-.0017	-.0016	-.0015	-.0014	-.0012	-.0011
17	-.0006	-.0005	-.0005	-.0005	-.0004	-.0004

TABLE 14.- LOAD DISTRIBUTION DUE TO A UNIT PERTURBATION LOAD - Continued

$$\left[B = 300;\ C = 2 \times 10^3;\ m = 36\right]$$

(b) Distributed perturbation load on stringer $j = 0$ between rings $i = 0$ and $i = 1$

j	Stringer load, p_{ij}, at station -					
	i = 1	i = 2	i = 3	i = 4	i = 5	i = 6
0	0.4108	0.2820	0.2038	0.1549	0.1234	0.1026
1	.0286	.0628	.0757	.0785	.0768	.0733
2	.0076	.0213	.0318	.0390	.0436	.0464
3	.0037	.0109	.0172	.0227	.0271	.0305
4	.0023	.0069	.0111	.0150	.0185	.0215
5	.0016	.0048	.0079	.0108	.0134	.0158
6	.0012	.0036	.0058	.0080	.0100	.0119
7	.0009	.0026	.0043	.0059	.0074	.0089
8	.0006	.0018	.0031	.0042	.0054	.0064
9	.0004	.0012	.0020	.0028	.0035	.0043
10	.0002	.0006	.0010	.0015	.0019	.0024
11	.0000	.0001	.0002	.0003	.0005	.0006
12	-.0001	-.0004	-.0005	-.0007	-.0008	-.0009
13	-.0003	-.0007	-.0012	-.0016	-.0019	-.0022
14	-.0004	-.0011	-.0017	-.0023	-.0028	-.0033
15	-.0005	-.0014	-.0022	-.0029	-.0036	-.0042
16	-.0005	-.0015	-.0025	-.0033	-.0041	-.0048
17	-.0006	-.0017	-.0027	-.0036	-.0044	-.0052
18	-.0006	-.0017	-.0027	-.0037	-.0046	-.0054

j	Shear flow, $q_{ij}L$, at station -					
	i = 0	i = 1	i = 2	i = 3	i = 4	i = 5
0	0.0892	0.0644	0.0391	0.0244	0.0157	0.0104
1	.0320	.0302	.0262	.0216	.0175	.0140
2	.0168	.0166	.0157	.0144	.0128	.0113
3	.0094	.0094	.0093	.0089	.0084	.0078
4	.0047	.0049	.0050	.0050	.0050	.0048
5	.0014	.0017	.0020	.0022	.0023	.0024
6	-.0010	-.0007	-.0003	.0000	.0003	.0005
7	-.0027	-.0024	-.0020	-.0016	-.0013	-.0010
8	-.0040	-.0036	-.0032	-.0028	-.0024	-.0021
9	-.0048	-.0044	-.0040	-.0036	-.0032	-.0028
10	-.0052	-.0049	-.0044	-.0040	-.0036	-.0032
11	-.0052	-.0049	-.0045	-.0041	-.0037	-.0034
12	-.0050	-.0047	-.0043	-.0040	-.0036	-.0033
13	-.0045	-.0042	-.0039	-.0036	-.0033	-.0030
14	-.0037	-.0035	-.0033	-.0030	-.0028	-.0025
15	-.0028	-.0026	-.0024	-.0023	-.0021	-.0019
16	-.0017	-.0016	-.0015	-.0014	-.0013	-.0012
17	-.0006	-.0006	-.0005	-.0005	-.0004	-.0004

TABLE 14.- LOAD DISTRIBUTION DUE TO A UNIT PERTURBATION LOAD - Concluded

$$\left[B = 300;\ C = 2 \times 10^3;\ m = 36\right]$$

(c) Shear perturbation load about shear panel (0,0)

j	Stringer load, p_{ij}/L, at station -					
	i = 1	i = 2	i = 3	i = 4	i = 5	i = 6
1	-0.3812	-0.2188	-0.1276	-0.0759	-0.0462	-0.0288
2	-.0183	-.0401	-.0427	-.0383	-.0319	-.0256
3	.0003	-.0082	-.0125	-.0143	-.0145	-.0138
4	.0039	-.0009	-.0033	-.0049	-.0058	-.0063
5	.0052	.0017	.0002	-.0009	-.0016	-.0022
6	.0057	.0030	.0019	.0012	.0006	.0000
7	.0057	.0037	.0029	.0023	.0018	.0014
8	.0053	.0041	.0035	.0030	.0026	.0022
9	.0047	.0042	.0038	.0034	.0030	.0027
10	.0040	.0042	.0039	.0035	.0032	.0029
11	.0032	.0040	.0038	.0035	.0032	.0030
12	.0024	.0037	.0036	.0034	.0031	.0029
13	.0018	.0033	.0033	.0031	.0029	.0026
14	.0012	.0028	.0029	.0027	.0025	.0023
15	.0008	.0022	.0023	.0022	.0020	.0019
16	.0005	.0016	.0017	.0016	.0015	.0014
17	.0002	.0010	.0011	.0010	.0009	.0009
18	.0001	.0003	.0004	.0003	.0003	.0003

j	Shear flow, q_{ij}, at station -					
	i = 0	i = 1	i = 2	i = 3	i = 4	i = 5
0	0.2765	0.1222	0.0775	0.0488	0.0315	0.0209
1	.0389	-.0402	-.0137	-.0029	.0017	.0035
2	.0755	-.0184	-.0111	-.0073	-.0046	-.0027
3	.0749	-.0100	-.0068	-.0055	-.0044	-.0035
4	.0671	-.0051	-.0044	-.0039	-.0034	-.0030
5	.0567	-.0016	-.0029	-.0029	-.0027	-.0024
6	.0453	.0012	-.0019	-.0021	-.0020	-.0019
7	.0339	.0032	-.0011	-.0015	-.0015	-.0015
8	.0233	.0044	-.0005	-.0011	-.0011	-.0011
9	.0139	.0049	.0000	-.0007	-.0008	-.0007
10	.0060	.0047	.0003	-.0003	-.0004	-.0004
11	-.0004	.0039	.0005	.0000	-.0001	-.0002
12	-.0053	.0026	.0006	.0002	.0001	.0001
13	-.0088	.0011	.0006	.0004	.0003	.0003
14	-.0113	-.0005	.0005	.0006	.0005	.0005
15	-.0129	-.0020	.0004	.0007	.0007	.0006
16	-.0138	-.0031	.0003	.0008	.0008	.0007
17	-.0143	-.0039	.0003	.0008	.0008	.0008
18	-.0144	-.0042	.0003	.0008	.0009	.0008

TABLE 15.- LOAD DISTRIBUTION DUE TO A UNIT PERTURBATION LOAD

$$\left[B = 1{,}000;\ C = 2 \times 10^3;\ m = 36\right]$$

(a) Concentrated perturbation load on stringer $j = 0$ at ring $i = 0$

j	Stringer load, p_{ij}, at station -						
	i = 0	i = 1	i = 2	i = 3	i = 4	i = 5	i = 6
0	0.5000	0.4001	0.3248	0.2676	0.2237	0.1900	0.1637
1	0	.0323	.0530	.0657	.0731	.0769	.0783
2	0	.0084	.0162	.0232	.0290	.0338	.0378
3	0	.0041	.0081	.0119	.0154	.0187	.0216
4	0	.0026	.0051	.0075	.0099	.0121	.0143
5	0	.0018	.0036	.0053	.0070	.0086	.0102
6	0	.0013	.0026	.0039	.0051	.0064	.0075
7	0	.0010	.0019	.0029	.0038	.0047	.0056
8	0	.0007	.0014	.0020	.0027	.0033	.0040
9	0	.0004	.0009	.0013	.0018	.0022	.0026
10	0	.0002	.0004	.0007	.0009	.0012	.0014
11	0	.0000	.0001	.0001	.0002	.0002	.0003
12	0	-.0001	-.0003	-.0004	-.0005	-.0006	-.0006
13	0	-.0003	-.0006	-.0008	-.0010	-.0013	-.0015
14	0	-.0004	-.0008	-.0012	-.0015	-.0019	-.0022
15	0	-.0005	-.0010	-.0015	-.0019	-.0023	-.0027
16	0	-.0006	-.0011	-.0017	-.0022	-.0027	-.0032
17	0	-.0006	-.0012	-.0018	-.0024	-.0029	-.0034
18	0	-.0006	-.0013	-.0018	-.0024	-.0030	-.0035

j	Shear flow, $q_{ij}L$, at station -					
	i = 0	i = 1	i = 2	i = 3	i = 4	i = 5
0	0.0499	0.0377	0.0286	0.0219	0.0169	0.0132
1	.0177	.0170	.0159	.0145	.0131	.0118
2	.0092	.0092	.0090	.0087	.0083	.0079
3	.0051	.0052	.0052	.0051	.0050	.0049
4	.0026	.0027	.0027	.0028	.0028	.0028
5	.0008	.0009	.0010	.0011	.0011	.0012
6	-.0005	-.0004	-.0003	-.0002	-.0001	.0000
7	-.0015	-.0014	-.0012	-.0011	-.0010	-.0009
8	-.0022	-.0020	-.0019	-.0018	-.0016	-.0015
9	-.0026	-.0025	-.0023	-.0022	-.0021	-.0019
10	-.0029	-.0027	-.0026	-.0024	-.0023	-.0022
11	-.0029	-.0028	-.0026	-.0025	-.0024	-.0022
12	-.0028	-.0026	-.0025	-.0024	-.0023	-.0022
13	-.0025	-.0024	-.0022	-.0022	-.0020	-.0020
14	-.0020	-.0020	-.0019	-.0018	-.0017	-.0016
15	-.0015	-.0015	-.0014	-.0014	-.0013	-.0012
16	-.0010	-.0009	-.0009	-.0008	-.0008	-.0008
17	-.0003	-.0003	-.0003	-.0003	-.0003	-.0003

TABLE 15.- LOAD DISTRIBUTION DUE TO A UNIT PERTURBATION LOAD - Continued

$$\left[B = 1{,}000;\ C = 2 \times 10^3;\ m = 36\right]$$

(b) Distributed perturbation load on stringer $j = 0$ between rings $i = 0$ and $i = 1$

j	Stringer load, p_{ij}, at station -					
	i = 1	i = 2	i = 3	i = 4	i = 5	i = 6
0	0.4477	0.3607	0.2949	0.2447	0.2061	0.1763
1	.0173	.0434	.0599	.0698	.0752	.0777
2	.0042	.0124	.0198	.0262	.0315	.0359
3	.0021	.0061	.0100	.0137	.0171	.0202
4	.0013	.0038	.0063	.0087	.0110	.0132
5	.0009	.0027	.0044	.0061	.0078	.0094
6	.0007	.0020	.0032	.0045	.0058	.0070
7	.0005	.0014	.0024	.0033	.0042	.0051
8	.0003	.0010	.0017	.0024	.0030	.0037
9	.0002	.0007	.0011	.0015	.0020	.0024
10	.0001	.0003	.0006	.0008	.0010	.0013
11	.0000	.0000	.0001	.0002	.0002	.0003
12	-.0001	-.0002	-.0003	-.0004	-.0005	-.0006
13	-.0001	-.0004	-.0007	-.0009	-.0012	-.0014
14	-.0002	-.0006	-.0010	-.0014	-.0017	-.0020
15	-.0003	-.0008	-.0012	-.0017	-.0021	-.0025
16	-.0003	-.0009	-.0014	-.0019	-.0024	-.0029
17	-.0003	-.0009	-.0015	-.0021	-.0026	-.0032
18	-.0003	-.0010	-.0016	-.0021	-.0027	-.0032

j	Shear flow, $q_{ij}L$, at station -					
	i = 0	i = 1	i = 2	i = 3	i = 4	i = 5
0	0.0523	0.0435	0.0329	0.0251	0.0193	0.0149
1	.0177	.0174	.0164	.0152	.0138	.0124
2	.0092	.0092	.0091	.0088	.0085	.0081
3	.0051	.0052	.0052	.0051	.0051	.0050
4	.0026	.0026	.0027	.0027	.0028	.0028
5	.0008	.0008	.0009	.0010	.0011	.0012
6	-.0006	-.0005	-.0004	-.0002	-.0001	.0000
7	-.0015	-.0014	-.0013	-.0012	-.0010	-.0009
8	-.0022	-.0021	-.0020	-.0018	-.0017	-.0016
9	-.0027	-.0026	-.0024	-.0023	-.0021	-.0020
10	-.0029	-.0028	-.0026	-.0025	-.0024	-.0022
11	-.0029	-.0028	-.0027	-.0026	-.0024	-.0023
12	-.0028	-.0027	-.0026	-.0024	-.0023	-.0022
13	-.0025	-.0024	-.0023	-.0022	-.0021	-.0020
14	-.0021	-.0020	-.0019	-.0018	-.0018	-.0017
15	-.0016	-.0015	-.0014	-.0014	-.0013	-.0013
16	-.0010	-.0009	-.0009	-.0008	-.0008	-.0008
17	-.0003	-.0003	-.0003	-.0003	-.0003	-.0003

TABLE 15.- LOAD DISTRIBUTION DUE TO A UNIT PERTURBATION LOAD - Concluded

$$\left[B = 1{,}000;\ C = 2 \times 10^3;\ m = 36\right]$$

(c) Shear perturbation load about shear panel (0,0)

j	Stringer load, p_{ij}/L, at station -					
	i = 1	i = 2	i = 3	i = 4	i = 5	i = 6
1	-0.4298	-0.3169	-0.2346	-0.1745	-0.1305	-0.0981
2	-.0112	-.0297	-.0388	-.0424	-.0425	-.0406
3	.0007	-.0042	-.0077	-.0104	-.0124	-.0136
4	.0030	.0005	-.0009	-.0022	-.0033	-.0042
5	.0040	.0023	.0015	.0008	.0002	-.0004
6	.0046	.0033	.0028	.0023	.0019	.0015
7	.0049	.0039	.0035	.0032	.0029	.0026
8	.0049	.0043	.0040	.0037	.0035	.0032
9	.0048	.0045	.0042	.0040	.0038	.0036
10	.0045	.0045	.0043	.0041	.0039	.0037
11	.0041	.0044	.0042	.0040	.0038	.0037
12	.0036	.0041	.0040	.0038	.0036	.0035
13	.0031	.0037	.0036	.0035	.0033	.0032
14	.0025	.0032	.0031	.0030	.0029	.0028
15	.0020	.0026	.0025	.0024	.0024	.0023
16	.0014	.0019	.0019	.0018	.0017	.0017
17	.0008	.0012	.0011	.0011	.0011	.0010
18	.0003	.0004	.0003	.0004	.0004	.0004

j	Shear flow, q_{ij}, at station -					
	i = 0	i = 1	i = 2	i = 3	i = 4	i = 5
0	0.1936	0.0842	0.0657	0.0502	0.0386	0.0299
1	.0532	-.0287	-.0166	-.0099	-.0055	-.0025
2	.0757	-.0102	-.0075	-.0064	-.0054	-.0044
3	.0744	-.0053	-.0040	-.0037	-.0034	-.0031
4	.0684	-.0028	-.0025	-.0024	-.0023	-.0022
5	.0604	-.0012	-.0017	-.0017	-.0017	-.0016
6	.0512	.0001	-.0012	-.0013	-.0012	-.0012
7	.0415	.0011	-.0008	-.0009	-.0009	-.0009
8	.0317	.0017	-.0006	-.0007	-.0007	-.0006
9	.0221	.0020	-.0003	-.0004	-.0004	-.0004
10	.0132	.0020	-.0001	-.0002	-.0002	-.0002
11	.0050	.0017	.0000	.0000	-.0001	-.0001
12	-.0022	.0012	.0002	.0001	.0001	.0001
13	-.0083	.0006	.0003	.0002	.0002	.0002
14	-.0133	-.0001	.0004	.0004	.0003	.0003
15	-.0172	-.0007	.0004	.0005	.0004	.0004
16	-.0200	-.0012	.0004	.0005	.0005	.0005
17	-.0217	-.0016	.0005	.0006	.0005	.0005
18	-.0222	-.0017	.0005	.0006	.0006	.0005

TABLE 16.- LOAD DISTRIBUTION DUE TO A UNIT PERTURBATION LOAD

$[B = 8;\ C = 2 \times 10^4;\ m = 36]$

(a) Concentrated perturbation load on stringer $j = 0$ at ring $i = 0$

j	Stringer load, p_{ij}, at station -						
	i = 0	i = 1	i = 2	i = 3	i = 4	i = 5	i = 6
0	0.5000	0.0682	0.0710	0.0559	0.0503	0.0467	0.0443
1	0	.1070	.0626	.0552	.0494	.0460	.0438
2	0	.0609	.0580	.0508	.0468	.0441	.0423
3	0	.0340	.0458	.0446	.0426	.0410	.0397
4	0	.0171	.0326	.0366	.0371	.0367	.0362
5	0	.0070	.0207	.0278	.0305	.0315	.0318
6	0	.0016	.0113	.0191	.0234	.0257	.0268
7	0	-.0007	.0046	.0115	.0164	.0195	.0214
8	0	-.0013	.0004	.0054	.0100	.0134	.0158
9	0	-.0012	-.0017	.0009	.0046	.0079	.0104
10	0	-.0010	-.0025	-.0019	.0004	.0031	.0054
11	0	-.0008	-.0026	-.0034	-.0025	-.0008	.0011
12	0	-.0008	-.0024	-.0040	-.0043	-.0036	-.0025
13	0	-.0009	-.0022	-.0041	-.0052	-.0055	-.0052
14	0	-.0010	-.0022	-.0039	-.0056	-.0066	-.0071
15	0	-.0011	-.0022	-.0038	-.0056	-.0072	-.0084
16	0	-.0012	-.0023	-.0036	-.0054	-.0074	-.0092
17	0	-.0012	-.0023	-.0035	-.0053	-.0074	-.0096
18	0	-.0012	-.0023	-.0035	-.0052	-.0074	-.0097

j	Shear flow, $q_{ij}L$, at station -					
	i = 0	i = 1	i = 2	i = 3	i = 4	i = 5
0	0.2159	-0.0014	0.0076	0.0028	0.0018	0.0012
1	.1089	.0430	.0149	.0087	.0052	.0034
2	.0480	.0459	.0222	.0126	.0079	.0052
3	.0140	.0341	.0234	.0146	.0095	.0065
4	-.0031	.0186	.0194	.0141	.0099	.0070
5	-.0101	.0048	.0123	.0114	.0089	.0066
6	-.0117	-.0048	.0045	.0071	.0067	.0055
7	-.0110	-.0101	-.0025	.0022	.0036	.0036
8	-.0096	-.0118	-.0074	-.0025	.0002	.0012
9	-.0084	-.0113	-.0101	-.0062	-.0031	-.0013
10	-.0075	-.0098	-.0107	-.0085	-.0057	-.0036
11	-.0067	-.0080	-.0099	-.0094	-.0074	-.0055
12	-.0059	-.0064	-.0083	-.0090	-.0082	-.0066
13	-.0050	-.0050	-.0065	-.0078	-.0079	-.0069
14	-.0041	-.0038	-.0047	-.0062	-.0069	-.0064
15	-.0030	-.0027	-.0032	-.0044	-.0052	-.0051
16	-.0018	-.0016	-.0018	-.0026	-.0033	-.0033
17	-.0006	-.0005	-.0006	-.0009	-.0011	-.0012

TABLE 16.- LOAD DISTRIBUTION DUE TO A UNIT PERTURBATION LOAD - Continued

$[B = 8;\ C = 2 \times 10^4;\ m = 36]$

(b) Distributed perturbation load on stringer $j = 0$ between rings $i = 0$ and $i = 1$

j	Stringer load, p_{ij}, at station -					
	i = 1	i = 2	i = 3	i = 4	i = 5	i = 6
0	0.2073	0.0740	0.0621	0.0530	0.0483	0.0454
1	.0850	.0785	.0590	.0520	.0476	.0448
2	.0399	.0606	.0539	.0487	.0454	.0431
3	.0187	.0419	.0453	.0436	.0418	.0403
4	.0074	.0263	.0351	.0369	.0369	.0364
5	.0018	.0145	.0248	.0294	.0311	.0317
6	-.0005	.0063	.0156	.0215	.0247	.0263
7	-.0009	.0015	.0082	.0142	.0181	.0205
8	-.0007	-.0009	.0028	.0078	.0118	.0147
9	-.0004	-.0018	-.0006	.0028	.0063	.0092
10	-.0002	-.0019	-.0024	-.0008	.0018	.0043
11	-.0002	-.0017	-.0031	-.0030	-.0017	.0001
12	-.0003	-.0015	-.0033	-.0043	-.0040	-.0031
13	-.0004	-.0014	-.0032	-.0047	-.0054	-.0054
14	-.0005	-.0015	-.0030	-.0048	-.0061	-.0069
15	-.0006	-.0016	-.0029	-.0047	-.0064	-.0078
16	-.0006	-.0017	-.0029	-.0045	-.0064	-.0083
17	-.0006	-.0018	-.0029	-.0043	-.0063	-.0085
18	-.0006	-.0018	-.0029	-.0043	-.0063	-.0086

j	Shear flow, $q_{ij}L$, at station -					
	i = 0	i = 1	i = 2	i = 3	i = 4	i = 5
0	0.2927	0.0666	0.0060	0.0046	0.0023	0.0014
1	.1228	.0730	.0256	.0116	.0067	.0042
2	.0429	.0523	.0323	.0168	.0100	.0064
3	.0056	.0290	.0289	.0186	.0118	.0079
4	-.0092	.0101	.0201	.0167	.0119	.0084
5	-.0127	-.0026	.0097	.0122	.0102	.0077
6	-.0117	-.0094	.0005	.0062	.0070	.0061
7	-.0098	-.0119	-.0061	.0002	.0031	.0037
8	-.0085	-.0117	-.0098	-.0047	-.0010	.0008
9	-.0077	-.0102	-.0111	-.0080	-.0045	-.0021
10	-.0072	-.0086	-.0106	-.0096	-.0070	-.0046
11	-.0068	-.0071	-.0091	-.0097	-.0084	-.0064
12	-.0061	-.0059	-.0074	-.0087	-.0086	-.0074
13	-.0052	-.0049	-.0056	-.0072	-.0079	-.0074
14	-.0042	-.0040	-.0041	-.0054	-.0066	-.0067
15	-.0030	-.0029	-.0028	-.0037	-.0049	-.0052
16	-.0018	-.0018	-.0016	-.0021	-.0030	-.0033
17	-.0006	-.0006	-.0005	-.0007	-.0010	-.0012

TABLE 16.- LOAD DISTRIBUTION DUE TO A UNIT PERTURBATION LOAD - Concluded

$$\left[B = 8;\ C = 2 \times 10^4;\ m = 36\right]$$

(c) Shear perturbation load about shear panel (0,0)

j	Stringer load, p_{ij}/L, at station -					
	i = 1	i = 2	i = 3	i = 4	i = 5	i = 6
1	-0.1123	0.0064	-0.0021	-0.0003	-0.0002	-0.0001
2	-.0203	-.0118	-.0019	-.0012	-.0006	-.0003
3	.0074	-.0084	-.0032	-.0015	-.0008	-.0005
4	.0123	-.0025	-.0028	-.0015	-.0009	-.0006
5	.0088	.0017	-.0013	-.0012	-.0008	-.0006
6	.0038	.0035	.0002	-.0006	-.0006	-.0005
7	.0000	.0033	.0013	.0001	-.0003	-.0003
8	-.0017	.0021	.0017	.0006	.0001	-.0001
9	-.0018	.0007	.0015	.0009	.0004	.0001
10	-.0012	-.0003	.0010	.0009	.0006	.0003
11	-.0004	-.0007	.0004	.0007	.0006	.0004
12	.0001	-.0008	-.0001	.0004	.0005	.0004
13	.0002	-.0005	-.0004	.0001	.0003	.0004
14	.0002	-.0002	-.0005	-.0002	.0001	.0003
15	.0001	.0000	-.0004	-.0003	.0000	.0002
16	.0000	.0001	-.0003	-.0003	-.0001	.0001
17	.0000	.0001	-.0001	-.0002	-.0001	.0001
18	.0000	.0000	.0000	-.0001	.0000	.0000

j	Shear flow, q_{ij}, at station -					
	i = 0	i = 1	i = 2	i = 3	i = 4	i = 5
0	0.7903	0.0974	0.0006	0.0033	0.0012	0.0007
1	.0150	-.0214	.0091	.0015	.0011	.0006
2	.0557	-.0299	-.0009	.0008	.0005	.0004
3	.0409	-.0141	-.0061	-.0009	-.0001	.0001
4	.0164	.0006	-.0058	-.0021	-.0008	-.0003
5	-.0013	.0077	-.0028	-.0023	-.0011	-.0005
6	-.0088	.0080	.0005	-.0015	-.0011	-.0006
7	-.0089	.0048	.0026	-.0003	-.0008	-.0006
8	-.0056	.0010	.0030	.0007	-.0002	-.0004
9	-.0020	-.0014	.0022	.0013	.0003	-.0001
10	.0004	-.0023	.0009	.0013	.0007	.0002
11	.0008	-.0019	-.0002	.0009	.0008	.0004
12	.0006	-.0011	-.0008	.0004	.0007	.0005
13	.0001	-.0003	-.0009	-.0001	.0005	.0004
14	-.0003	.0001	-.0007	-.0004	.0002	.0003
15	-.0005	.0003	-.0004	-.0004	-.0001	.0000
16	-.0006	.0002	.0000	-.0004	-.0004	-.0002
17	-.0005	.0001	.0002	-.0003	-.0005	-.0004

TABLE 17.- LOAD DISTRIBUTION DUE TO A UNIT PERTURBATION LOAD

$$\left[B = 30;\ C = 2 \times 10^4;\ m = 36\right]$$

(a) Concentrated perturbation load on stringer $j = 0$ at ring $i = 0$

j	Stringer load, p_{ij}, at station -						
	i = 0	i = 1	i = 2	i = 3	i = 4	i = 5	i = 6
0	0.5000	0.1585	0.0918	0.0692	0.0584	0.0522	0.0484
1	0	.0925	.0772	.0640	.0559	.0508	.0474
2	0	.0411	.0533	.0525	.0495	.0467	.0446
3	0	.0219	.0354	.0404	.0415	.0411	.0404
4	0	.0124	.0235	.0301	.0333	.0348	.0353
5	0	.0068	.0153	.0217	.0258	.0283	.0298
6	0	.0034	.0093	.0149	.0191	.0221	.0242
7	0	.0013	.0051	.0095	.0133	.0164	.0187
8	0	.0002	.0022	.0053	.0084	.0112	.0135
9	0	-.0004	.0003	.0021	.0044	.0067	.0087
10	0	-.0007	-.0009	-.0002	.0012	.0029	.0045
11	0	-.0008	-.0016	-.0017	-.0011	-.0002	.0009
12	0	-.0009	-.0020	-.0027	-.0028	-.0025	-.0020
13	0	-.0010	-.0022	-.0033	-.0040	-.0043	-.0044
14	0	-.0010	-.0023	-.0036	-.0048	-.0056	-.0062
15	0	-.0011	-.0024	-.0038	-.0052	-.0065	-.0075
16	0	-.0012	-.0024	-.0038	-.0054	-.0070	-.0084
17	0	-.0012	-.0024	-.0039	-.0055	-.0073	-.0089
18	0	-.0012	-.0024	-.0039	-.0056	-.0074	-.0091

j	Shear flow, $q_{ij}L$, at station -					
	i = 0	i = 1	i = 2	i = 3	i = 4	i = 5
0	0.1708	0.0334	0.0113	0.0054	0.0031	0.0019
1	.0783	.0487	.0245	.0135	.0082	.0053
2	.0372	.0364	.0253	.0165	.0109	.0074
3	.0153	.0230	.0202	.0155	.0113	.0082
4	.0029	.0118	.0137	.0122	.0099	.0076
5	-.0039	.0034	.0073	.0081	.0074	.0062
6	-.0073	-.0026	.0017	.0038	.0044	.0041
7	-.0086	-.0064	-.0027	.0000	.0013	.0018
8	-.0088	-.0084	-.0057	-.0032	-.0014	-.0004
9	-.0084	-.0090	-.0076	-.0055	-.0037	-.0024
10	-.0078	-.0088	-.0083	-.0069	-.0054	-.0041
11	-.0070	-.0080	-.0082	-.0075	-.0064	-.0052
12	-.0061	-.0068	-.0075	-.0074	-.0067	-.0057
13	-.0051	-.0056	-.0064	-.0067	-.0064	-.0056
14	-.0041	-.0043	-.0051	-.0056	-.0055	-.0050
15	-.0030	-.0031	-.0036	-.0041	-.0042	-.0039
16	-.0018	-.0018	-.0022	-.0025	-.0027	-.0025
17	-.0006	-.0006	-.0007	-.0009	-.0009	-.0008

TABLE 17.- LOAD DISTRIBUTION DUE TO A UNIT PERTURBATION LOAD - Continued

$\left[B = 30;\ C = 2 \times 10^4;\ m = 36\right]$

(b) Distributed perturbation load on stringer $j = 0$ between rings $i = 0$ and $i = 1$

j	Stringer load, p_{ij}, at station -					
	i = 1	i = 2	i = 3	i = 4	i = 5	i = 6
0	0.2893	0.1192	0.0790	0.0632	0.0550	0.0502
1	.0640	.0850	.0701	.0596	.0531	.0490
2	.0235	.0490	.0532	.0510	.0481	.0456
3	.0115	.0296	.0384	.0411	.0413	.0407
4	.0060	.0184	.0272	.0319	.0342	.0351
5	.0030	.0111	.0187	.0239	.0272	.0291
6	.0013	.0063	.0122	.0171	.0207	.0232
7	.0004	.0031	.0073	.0115	.0149	.0176
8	-.0001	.0010	.0037	.0069	.0099	.0124
9	-.0002	-.0002	.0011	.0032	.0056	.0077
10	-.0003	-.0009	-.0006	.0005	.0021	.0037
11	-.0003	-.0013	-.0017	-.0015	-.0007	.0004
12	-.0004	-.0015	-.0024	-.0028	-.0027	-.0023
13	-.0004	-.0016	-.0028	-.0037	-.0042	-.0043
14	-.0005	-.0016	-.0030	-.0042	-.0052	-.0059
15	-.0005	-.0017	-.0031	-.0045	-.0058	-.0070
16	-.0006	-.0018	-.0031	-.0046	-.0062	-.0077
17	-.0006	-.0018	-.0031	-.0047	-.0064	-.0081
18	-.0006	-.0018	-.0031	-.0047	-.0065	-.0083

j	Shear flow, $q_{ij}L$, at station -					
	i = 0	i = 1	i = 2	i = 3	i = 4	i = 5
0	0.2107	0.0851	0.0201	0.0079	0.0041	0.0024
1	.0826	.0641	.0350	.0184	.0105	.0066
2	.0355	.0387	.0308	.0206	.0135	.0090
3	.0126	.0205	.0220	.0179	.0133	.0096
4	.0007	.0082	.0132	.0131	.0111	.0087
5	-.0053	.0000	.0057	.0079	.0078	.0068
6	-.0078	-.0050	-.0002	.0029	.0042	.0043
7	-.0086	-.0078	-.0045	-.0012	.0008	.0016
8	-.0085	-.0089	-.0071	-.0044	-.0022	-.0009
9	-.0081	-.0089	-.0084	-.0065	-.0046	-.0031
10	-.0074	-.0083	-.0087	-.0076	-.0061	-.0047
11	-.0067	-.0074	-.0082	-.0079	-.0070	-.0058
12	-.0059	-.0063	-.0072	-.0075	-.0071	-.0062
13	-.0051	-.0052	-.0060	-.0067	-.0066	-.0060
14	-.0041	-.0041	-.0047	-.0053	-.0056	-.0053
15	-.0030	-.0029	-.0033	-.0039	-.0042	-.0041
16	-.0018	-.0017	-.0020	-.0024	-.0026	-.0026
17	-.0006	-.0005	-.0007	-.0008	-.0009	-.0009

TABLE 17.- LOAD DISTRIBUTION DUE TO A UNIT PERTURBATION LOAD - Concluded

$$\left[B = 30;\ C = 2 \times 10^4;\ m = 36\right]$$

(c) Shear perturbation load about shear panel (0,0)

j	Stringer load, p_{ij}/L, at station -					
	i = 1	i = 2	i = 3	i = 4	i = 5	i = 6
1	-0.2188	-0.0323	-0.0079	-0.0029	-0.0014	-0.0007
2	-.0236	-.0305	-.0137	-.0064	-.0034	-.0019
3	.0093	-.0106	-.0097	-.0062	-.0039	-.0025
4	.0146	-.0005	-.0045	-.0043	-.0033	-.0024
5	.0124	.0040	-.0006	-.0021	-.0022	-.0019
6	.0078	.0054	.0017	-.0002	-.0010	-.0012
7	.0034	.0051	.0028	.0010	.0000	-.0005
8	.0003	.0038	.0030	.0017	.0008	.0001
9	-.0014	.0022	.0027	.0020	.0012	.0006
10	-.0018	.0008	.0019	.0018	.0014	.0009
11	-.0016	-.0002	.0011	.0014	.0013	.0011
12	-.0010	-.0008	.0003	.0009	.0011	.0011
13	-.0004	-.0010	-.0003	.0004	.0008	.0010
14	.0000	-.0009	-.0006	.0000	.0006	.0008
15	.0002	-.0007	-.0007	-.0002	.0003	.0006
16	.0002	-.0004	-.0006	-.0003	.0001	.0004
17	.0002	-.0002	-.0004	-.0002	.0000	.0002
18	.0001	-.0001	-.0002	-.0001	.0000	.0001

j	Shear flow, q_{ij}, at station -					
	i = 0	i = 1	i = 2	i = 3	i = 4	i = 5
0	0.5997	0.1438	0.0307	0.0108	0.0051	0.0029
1	.0372	-.0426	.0063	.0058	.0036	.0023
2	.0845	-.0358	-.0105	-.0015	.0005	.0008
3	.0660	-.0159	-.0114	-.0049	-.0018	-.0006
4	.0367	-.0007	-.0075	-.0051	-.0028	-.0014
5	.0120	.0075	-.0028	-.0036	-.0027	-.0018
6	-.0037	.0098	.0009	-.0017	-.0020	-.0016
7	-.0105	.0082	.0032	.0001	-.0009	-.0011
8	-.0111	.0047	.0039	.0014	.0001	-.0005
9	-.0084	.0012	.0034	.0021	.0008	.0001
10	-.0047	-.0014	.0023	.0022	.0013	.0005
11	-.0017	-.0027	.0010	.0018	.0014	.0008
12	.0004	-.0029	-.0001	.0012	.0012	.0008
13	.0012	-.0024	-.0009	.0005	.0008	.0006
14	.0013	-.0015	-.0011	-.0001	.0003	.0004
15	.0009	-.0006	-.0011	-.0006	-.0002	.0000
16	.0004	.0000	-.0009	-.0010	-.0007	-.0003
17	.0000	.0004	-.0007	-.0012	-.0009	-.0005
18	-.0002	.0006	-.0006	-.0012	-.0010	-.0005

TABLE 18.- LOAD DISTRIBUTION DUE TO A UNIT PERTURBATION LOAD

$$\left[B = 100;\ C = 2 \times 10^4;\ m = 36\right]$$

(a) Concentrated perturbation load on stringer $j = 0$ at ring $i = 0$

j	Stringer load, p_{ij}, at station -						
	i = 0	i = 1	i = 2	i = 3	i = 4	i = 5	i = 6
0	0.5000	0.2564	0.1547	0.1079	0.0840	0.0704	0.0620
1	0	.0714	.0817	.0766	.0692	.0626	.0575
2	0	.0251	.0404	.0473	.0494	.0493	.0482
3	0	.0128	.0232	.0304	.0349	.0375	.0388
4	0	.0077	.0149	.0208	.0252	.0285	.0307
5	0	.0049	.0101	.0147	.0185	.0217	.0241
6	0	.0031	.0068	.0104	.0136	.0163	.0187
7	0	.0019	.0045	.0071	.0097	.0120	.0140
8	0	.0010	.0027	.0046	.0065	.0084	.0100
9	0	.0004	.0013	.0025	.0039	.0052	.0065
10	0	.0000	.0003	.0009	.0017	.0026	.0035
11	0	-.0004	-.0005	-.0004	-.0001	.0003	.0008
12	0	-.0006	-.0011	-.0014	-.0016	-.0015	-.0015
13	0	-.0008	-.0016	-.0022	-.0027	-.0031	-.0033
14	0	-.0009	-.0019	-.0028	-.0036	-.0043	-.0049
15	0	-.0010	-.0021	-.0033	-.0043	-.0052	-.0061
16	0	-.0011	-.0023	-.0035	-.0048	-.0059	-.0069
17	0	-.0012	-.0024	-.0037	-.0050	-.0063	-.0074
18	0	-.0012	-.0024	-.0037	-.0051	-.0064	-.0076

j	Shear flow, $q_{ij}L$, at station -					
	i = 0	i = 1	i = 2	i = 3	i = 4	i = 5
0	0.1218	0.0508	0.0234	0.0120	0.0068	0.0042
1	.0504	.0405	.0285	.0194	.0134	.0094
2	.0253	.0251	.0216	.0173	.0135	.0104
3	.0125	.0147	.0144	.0128	.0110	.0091
4	.0048	.0075	.0085	.0084	.0077	.0068
5	.0002	.0024	.0039	.0045	.0046	.0043
6	-.0033	-.0013	.0004	.0013	.0018	.0020
7	-.0052	-.0039	-.0023	-.0012	-.0005	.0000
8	-.0062	-.0055	-.0042	-.0032	-.0023	-.0017
9	-.0066	-.0064	-.0054	-.0045	-.0037	-.0030
10	-.0066	-.0067	-.0061	-.0053	-.0045	-.0038
11	-.0062	-.0065	-.0062	-.0057	-.0050	-.0043
12	-.0056	-.0060	-.0059	-.0056	-.0050	-.0044
13	-.0048	-.0052	-.0053	-.0051	-.0047	-.0042
14	-.0039	-.0042	-.0043	-.0043	-.0040	-.0036
15	-.0028	-.0031	-.0032	-.0032	-.0030	-.0027
16	-.0017	-.0019	-.0020	-.0020	-.0019	-.0017
17	-.0006	-.0007	-.0007	-.0007	-.0007	-.0006

TABLE 18.- LOAD DISTRIBUTION DUE TO A UNIT PERTURBATION LOAD - Continued

$$\left[B = 100;\ C = 2 \times 10^4;\ m = 36\right]$$

(b) Distributed perturbation load on stringer $j = 0$ between rings $i = 0$ and $i = 1$

j	Stringer load, p_{ij}, at station -					
	i = 1	i = 2	i = 3	i = 4	i = 5	i = 6
0	0.3611	0.1991	0.1287	0.0948	0.0766	0.0659
1	.0437	.0787	.0796	.0729	.0658	.0599
2	.0133	.0336	.0444	.0486	.0658	.0599
3	.0066	.0183	.0271	.0329	.0363	.0382
4	.0039	.0114	.0180	.0231	.0269	.0297
5	.0024	.0075	.0124	.0167	.0202	.0229
6	.0015	.0050	.0086	.0120	.0150	.0175
7	.0009	.0032	.0058	.0084	.0109	.0130
8	.0005	.0018	.0036	.0055	.0074	.0092
9	.0002	.0008	.0019	.0032	.0046	.0059
10	.0000	.0001	.0006	.0013	.0022	.0030
11	-.0002	-.0005	-.0005	-.0003	.0001	.0006
12	-.0003	-.0009	-.0013	-.0015	-.0016	-.0015
13	-.0004	-.0012	-.0019	-.0025	-.0029	-.0032
14	-.0005	-.0014	-.0024	-.0032	-.0040	-.0046
15	-.0005	-.0016	-.0027	-.0038	-.0048	-.0057
16	-.0006	-.0017	-.0029	-.0042	-.0053	-.0064
17	-.0006	-.0018	-.0030	-.0044	-.0057	-.0068
18	-.0006	-.0018	-.0031	-.0044	-.0058	-.0070

j	Shear flow, $q_{ij}L$, at station -					
	i = 0	i = 1	i = 2	i = 3	i = 4	i = 5
0	0.1389	0.0810	0.0352	0.0170	0.0091	0.0054
1	.0515	.0461	.0343	.0237	.0162	.0112
2	.0249	.0258	.0235	.0194	.0153	.0119
3	.0118	.0140	.0147	.0137	.0119	.0100
4	.0041	.0064	.0082	.0085	.0081	.0073
5	-.0007	.0012	.0033	.0043	.0046	.0045
6	-.0036	-.0022	-.0003	.0009	.0016	.0019
7	-.0054	-.0045	-.0030	-.0017	-.0008	-.0002
8	-.0063	-.0059	-.0048	-.0037	-.0027	-.0020
9	-.0066	-.0066	-.0059	-.0050	-.0042	-.0033
10	-.0066	-.0067	-.0063	-.0057	-.0049	-.0042
11	-.0062	-.0064	-.0063	-.0059	-.0055	-.0047
12	-.0056	-.0058	-.0059	-.0057	-.0053	-.0047
13	-.0048	-.0050	-.0052	-.0052	-.0049	-.0044
14	-.0039	-.0040	-.0042	-.0043	-.0041	-.0038
15	-.0028	-.0029	-.0031	-.0032	-.0031	-.0029
16	-.0017	-.0018	-.0019	-.0020	-.0020	-.0018
17	-.0006	-.0006	-.0006	-.0007	-.0007	-.0006

TABLE 18.- LOAD DISTRIBUTION DUE TO A UNIT PERTURBATION LOAD - Concluded

$$\left[B = 100;\ C = 2 \times 10^4;\ m = 36\right]$$

(c) Shear perturbation load about shear panel (0,0)

j	Stringer load, p_{ij}/L, at station -					
	i = 1	i = 2	i = 3	i = 4	i = 5	i = 6
1	-0.3133	-0.1190	-0.0482	-0.0213	-0.0103	-0.0055
2	-.0196	-.0409	-.0326	-.0223	-.0147	-.0098
3	.0080	-.0089	-.0132	-.0127	-.0106	-.0084
4	.0128	.0011	-.0037	-.0056	-.0059	-.0055
5	.0123	.0049	.0008	-.0015	-.0026	-.0030
6	.0097	.0061	.0029	.0008	-.0004	-.0011
7	.0065	.0059	.0038	.0021	.0010	.0002
8	.0034	.0051	.0039	.0027	.0018	.0011
9	.0011	.0038	.0036	.0029	.0022	.0017
10	-.0005	.0024	.0029	.0027	.0023	.0020
11	-.0013	.0012	.0021	.0024	.0023	.0021
12	-.0015	.0002	.0014	.0019	.0021	.0020
13	-.0013	-.0005	.0007	.0014	.0018	.0019
14	-.0009	-.0009	.0002	.0010	.0014	.0016
15	-.0006	-.0010	-.0001	.0006	.0011	.0013
16	-.0003	-.0009	-.0003	.0004	.0008	.0010
17	-.0001	-.0006	-.0002	.0002	.0004	.0006
18	.0000	-.0002	-.0001	.0001	.0001	.0002

j	Shear flow, q_{ij}, at station -					
	i = 0	i = 1	i = 2	i = 3	i = 4	i = 5
0	0.4304	0.1425	0.0633	0.0302	0.0160	0.0094
1	.0570	-.0518	-.0074	.0032	.0050	.0046
2	.0962	-.0305	-.0157	-.0070	-.0025	-.0004
3	.0803	-.0136	-.0114	-.0075	-.0046	-.0026
4	.0547	-.0020	-.0066	-.0056	-.0042	-.0030
5	.0301	.0054	-.0025	-.0034	-.0031	-.0026
6	.0106	.0091	.0007	-.0014	-.0019	-.0019
7	-.0023	.0096	.0029	.0003	-.0007	-.0012
8	-.0092	.0080	.0040	.0015	.0002	-.0005
9	-.0113	.0052	.0042	.0022	.0009	.0001
10	-.0103	.0023	.0037	.0024	.0013	.0004
11	-.0078	-.0001	.0027	.0022	.0013	.0006
12	-.0049	-.0017	.0016	.0017	.0012	.0007
13	-.0023	-.0025	.0004	.0010	.0008	.0006
14	-.0004	-.0026	-.0007	.0002	.0004	.0004
15	.0008	-.0022	-.0015	-.0006	-.0001	.0002
16	.0014	-.0016	-.0021	-.0011	-.0003	.0000
17	.0017	-.0012	-.0025	-.0015	-.0006	-.0002
18	.0018	-.0010	-.0026	-.0018	-.0006	-.0002

TABLE 19.- LOAD DISTRIBUTION DUE TO A UNIT PERTURBATION LOAD

$$\left[B = 300;\ C = 2 \times 10^4;\ m = 36\right]$$

(a) Concentrated perturbation load on stringer $j = 0$ at ring $i = 0$

j	Stringer load, p_{ij}, at station -						
	i = 0	i = 1	i = 2	i = 3	i = 4	i = 5	i = 6
0	0.5000	0.3358	0.2370	0.1760	0.1373	0.1119	0.0947
1	0	.0509	.0720	.0786	.0785	.0755	.0715
2	0	.0151	.0274	.0362	.0420	.0455	.0474
3	0	.0075	.0144	.0203	.0252	.0291	.0321
4	0	.0046	.0091	.0132	.0169	.0201	.0229
5	0	.0031	.0063	.0093	.0121	.0146	.0169
6	0	.0022	.0045	.0067	.0088	.0108	.0127
7	0	.0015	.0032	.0048	.0064	.0080	.0094
8	0	.0010	.0021	.0033	.0045	.0056	.0067
9	0	.0006	.0013	.0021	.0028	.0036	.0044
10	0	.0002	.0006	.0010	.0014	.0019	.0024
11	0	-.0001	.0000	.0000	.0002	.0004	.0006
12	0	-.0003	-.0006	-.0007	-.0009	-.0010	-.0010
13	0	-.0005	-.0010	-.0014	-.0018	-.0021	-.0024
14	0	-.0007	-.0013	-.0019	-.0025	-.0030	-.0035
15	0	-.0008	-.0016	-.0024	-.0031	-.0038	-.0044
16	0	-.0009	-.0018	-.0027	-.0035	-.0043	-.0050
17	0	-.0009	-.0019	-.0028	-.0038	-.0046	-.0054
18	0	-.0010	-.0019	-.0029	-.0038	-.0047	-.0055

j	Shear flow, $q_{ij}L$, at station -					
	i = 0	i = 1	i = 2	i = 3	i = 4	i = 5
0	0.0821	0.0494	0.0305	0.0194	0.0127	0.0086
1	.0312	.0283	.0239	.0195	.0157	.0126
2	.0161	.0161	.0151	.0137	.0121	.0106
3	.0086	.0092	.0092	.0088	.0082	.0076
4	.0039	.0047	.0051	.0051	.0050	.0048
5	.0008	.0016	.0021	.0023	.0025	.0025
6	-.0014	-.0007	-.0002	.0002	.0005	.0006
7	-.0029	-.0023	-.0018	-.0014	-.0011	-.0008
8	-.0039	-.0035	-.0030	-.0026	-.0022	-.0019
9	-.0044	-.0042	-.0038	-.0034	-.0030	-.0027
10	-.0047	-.0045	-.0042	-.0038	-.0035	-.0032
11	-.0046	-.0045	-.0043	-.0040	-.0036	-.0033
12	-.0043	-.0043	-.0041	-.0039	-.0036	-.0033
13	-.0038	-.0038	-.0037	-.0035	-.0032	-.0030
14	-.0031	-.0032	-.0031	-.0029	-.0027	-.0025
15	-.0023	-.0024	-.0023	-.0022	-.0020	-.0019
16	-.0014	-.0014	-.0014	-.0014	-.0013	-.0012
17	-.0005	-.0005	-.0005	-.0005	-.0004	-.0004

TABLE 19.- LOAD DISTRIBUTION DUE TO A UNIT PERTURBATION LOAD - Continued

$$\left[B = 300;\ C = 2 \times 10^4;\ m = 36\right]$$

(b) Distributed perturbation load on stringer $j = 0$ between rings $i = 0$ and $i = 1$

j	Stringer load, p_{ij}, at station -					
	i = 1	i = 2	i = 3	i = 4	i = 5	i = 6
0	0.4110	0.2824	0.2042	0.1552	0.1237	0.1028
1	.0288	.0631	.0761	.0789	.0771	.0735
2	.0077	.0216	.0321	.0393	.0439	.0466
3	.0038	.0110	.0174	.0228	.0272	.0307
4	.0023	.0069	.0112	.0151	.0185	.0215
5	.0016	.0047	.0078	.0107	.0134	.0158
6	.0011	.0033	.0056	.0078	.0099	.0118
7	.0007	.0023	.0040	.0056	.0072	.0087
8	.0005	.0016	.0027	.0039	.0051	.0062
9	.0003	.0009	.0017	.0025	.0032	.0040
10	.0001	.0004	.0008	.0012	.0017	.0021
11	.0000	-.0001	.0000	.0001	.0003	.0005
12	-.0002	-.0005	-.0007	-.0008	-.0009	-.0010
13	-.0003	-.0008	-.0012	-.0016	-.0019	-.0022
14	-.0003	-.0010	-.0016	-.0022	-.0028	-.0033
15	-.0004	-.0012	-.0020	-.0027	-.0034	-.0041
16	-.0004	-.0013	-.0022	-.0031	-.0039	-.0047
17	-.0005	-.0014	-.0024	-.0033	-.0042	-.0050
18	-.0005	-.0014	-.0024	-.0034	-.0043	-.0051

j	Shear flow, $q_{ij}L$, at station -					
	i = 0	i = 1	i = 2	i = 3	i = 4	i = 5
0	0.0890	0.0643	0.0391	0.0244	0.0158	0.0105
1	.0314	.0300	.0261	.0216	.0176	.0140
2	.0160	.0162	.0156	.0144	.0130	.0114
3	.0084	.0090	.0092	.0090	.0086	.0079
4	.0037	.0044	.0049	.0051	.0051	.0049
5	.0006	.0012	.0018	.0022	.0024	.0025
6	-.0015	-.0010	-.0004	.0000	.0003	.0005
7	-.0030	-.0026	-.0021	-.0016	-.0012	-.0010
8	-.0040	-.0037	-.0032	-.0028	-.0024	-.0021
9	-.0045	-.0043	-.0040	-.0036	-.0032	-.0029
10	-.0047	-.0046	-.0044	-.0040	-.0036	-.0033
11	-.0046	-.0046	-.0044	-.0042	-.0038	-.0035
12	-.0043	-.0043	-.0042	-.0040	-.0037	-.0034
13	-.0037	-.0038	-.0038	-.0036	-.0034	-.0031
14	-.0031	-.0031	-.0031	-.0030	-.0028	-.0027
15	-.0023	-.0023	-.0024	-.0023	-.0021	-.0020
16	-.0014	-.0014	-.0015	-.0014	-.0013	-.0013
17	-.0005	-.0005	-.0005	-.0005	-.0004	-.0004

TABLE 19.- LOAD DISTRIBUTION DUE TO A UNIT PERTURBATION LOAD - Concluded

$$\left[B = 300;\ C = 2 \times 10^4;\ m = 36\right]$$

(c) Shear perturbation load about shear panel (0,0)

j	Stringer load, p_{ij}/L, at station -					
	i = 1	i = 2	i = 3	i = 4	i = 5	i = 6
1	-0.3796	-0.2183	-0.1274	-0.0759	-0.0462	-0.0288
2	-.0141	-.0387	-.0421	-.0381	-.0319	-.0257
3	.0060	-.0060	-.0116	-.0140	-.0145	-.0138
4	.0099	.0016	-.0022	-.0045	-.0057	-.0063
5	.0104	.0043	.0014	-.0004	-.0015	-.0023
6	.0094	.0054	.0031	.0016	.0007	.0000
7	.0076	.0056	.0038	.0027	.0019	.0014
8	.0054	.0052	.0041	.0033	.0027	.0022
9	.0033	.0045	.0040	.0035	.0031	.0027
10	.0016	.0036	.0037	.0035	.0032	.0029
11	.0002	.0026	.0032	.0033	.0032	.0030
12	-.0007	.0017	.0027	.0030	.0030	.0029
13	-.0011	.0009	.0021	.0026	.0027	.0027
14	-.0013	.0003	.0016	.0022	.0023	.0023
15	-.0012	.0000	.0011	.0017	.0019	.0019
16	-.0010	-.0002	.0008	.0012	.0014	.0014
17	-.0006	-.0002	.0004	.0007	.0008	.0009
18	-.0002	-.0001	.0001	.0002	.0003	.0003

j	Shear flow, q_{ij}, at station -					
	i = 0	i = 1	i = 2	i = 3	i = 4	i = 5
0	0.3095	0.1135	0.0732	0.0466	0.0304	0.0204
1	.0688	-.0479	-.0177	-.0049	.0008	.0031
2	.0970	-.0233	-.0142	-.0090	-.0054	-.0031
3	.0849	-.0112	-.0087	-.0065	-.0049	-.0037
4	.0651	-.0029	-.0049	-.0043	-.0036	-.0031
5	.0442	.0031	-.0019	-.0025	-.0025	-.0024
6	.0254	.0071	.0004	-.0010	-.0015	-.0017
7	.0103	.0090	.0022	.0001	-.0008	-.0011
8	-.0005	.0091	.0034	.0009	-.0002	-.0006
9	-.0072	.0080	.0039	.0015	.0003	-.0003
10	-.0103	.0060	.0038	.0017	.0006	.0000
11	-.0107	.0036	.0031	.0016	.0007	.0002
12	-.0094	.0012	.0021	.0012	.0006	.0003
13	-.0071	-.0008	.0009	.0008	.0005	.0004
14	-.0045	-.0025	-.0004	.0002	.0004	.0004
15	-.0021	-.0036	-.0015	-.0004	.0002	.0004
16	-.0002	-.0044	-.0024	-.0008	.0000	.0004
17	.0010	-.0048	-.0030	-.0011	-.0001	.0003
18	.0014	-.0050	-.0033	-.0012	-.0002	.0003

TABLE 20.- LOAD DISTRIBUTION DUE TO A UNIT PERTURBATION LOAD

$$\left[B = 1{,}000;\ C = 2 \times 10^4;\ m = 36\right]$$

(a) Concentrated perturbation load on stringer $j = 0$ at ring $i = 0$

j	Stringer load, p_{ij}, at station -						
	i = 0	i = 1	i = 2	i = 3	i = 4	i = 5	i = 6
0	0.5000	0.4001	0.3248	0.2676	0.2237	0.1900	0.1637
1	0	.0323	.0530	.0657	.0731	.0769	.0783
2	0	.0084	.0162	.0232	.0290	.0338	.0378
3	0	.0041	.0081	.0119	.0154	.0187	.0216
4	0	.0026	.0051	.0075	.0099	.0121	.0143
5	0	.0018	.0036	.0053	.0070	.0086	.0102
6	0	.0013	.0026	.0039	.0051	.0064	.0075
7	0	.0010	.0019	.0029	.0038	.0047	.0056
8	0	.0007	.0014	.0020	.0027	.0033	.0040
9	0	.0004	.0009	.0013	.0018	.0022	.0026
10	0	.0002	.0004	.0007	.0009	.0012	.0014
11	0	.0000	.0001	.0001	.0002	.0002	.0003
12	0	-.0001	-.0003	-.0004	-.0005	-.0006	-.0006
13	0	-.0003	-.0006	-.0008	-.0010	-.0013	-.0015
14	0	-.0004	-.0008	-.0012	-.0015	-.0019	-.0022
15	0	-.0005	-.0010	-.0015	-.0019	-.0023	-.0027
16	0	-.0006	-.0011	-.0017	-.0022	-.0027	-.0032
17	0	-.0006	-.0012	-.0018	-.0024	-.0029	-.0034
18	0	-.0006	-.0013	-.0018	-.0024	-.0030	-.0035

j	Shear flow, $q_{ij}L$, at station -					
	i = 0	i = 1	i = 2	i = 3	i = 4	i = 5
0	0.0499	0.0377	0.0286	0.0219	0.0169	0.0132
1	.0177	.0170	.0159	.0145	.0131	.0118
2	.0092	.0092	.0090	.0087	.0083	.0079
3	.0051	.0052	.0052	.0051	.0050	.0049
4	.0026	.0027	.0027	.0028	.0028	.0028
5	.0008	.0009	.0010	.0011	.0011	.0012
6	-.0005	-.0004	-.0003	-.0002	-.0001	.0000
7	-.0015	-.0014	-.0012	-.0011	-.0010	-.0009
8	-.0022	-.0020	-.0019	-.0018	-.0016	-.0015
9	-.0026	-.0025	-.0023	-.0022	-.0021	-.0019
10	-.0029	-.0027	-.0026	-.0024	-.0023	-.0022
11	-.0029	-.0028	-.0026	-.0025	-.0024	-.0022
12	-.0028	-.0026	-.0025	-.0024	-.0023	-.0022
13	-.0025	-.0024	-.0022	-.0022	-.0020	-.0020
14	-.0020	-.0020	-.0019	-.0018	-.0017	-.0016
15	-.0015	-.0015	-.0014	-.0014	-.0013	-.0012
16	-.0010	-.0009	-.0009	-.0008	-.0008	-.0008
17	-.0003	-.0003	-.0003	-.0003	-.0003	-.0003

TABLE 20.- LOAD DISTRIBUTION DUE TO A UNIT PERTURBATION LOAD - Continued

$$\left[B = 1{,}000;\ C = 2 \times 10^4;\ m = 36\right]$$

(b) Distributed perturbation load on stringer $j = 0$ between rings $i = 0$ and $i = 1$

j	Stringer load, p_{ij}, at station -					
	i = 1	i = 2	i = 3	i = 4	i = 5	i = 6
0	0.4477	0.3607	0.2949	0.2447	0.2061	0.1763
1	.0173	.0434	.0599	.0698	.0752	.0777
2	.0042	.0124	.0198	.0262	.0315	.0359
3	.0021	.0061	.0100	.0137	.0171	.0202
4	.0013	.0038	.0063	.0087	.0110	.0132
5	.0009	.0027	.0044	.0061	.0078	.0094
6	.0007	.0020	.0032	.0045	.0058	.0070
7	.0005	.0014	.0024	.0033	.0042	.0051
8	.0003	.0010	.0017	.0024	.0030	.0037
9	.0002	.0007	.0011	.0015	.0020	.0024
10	.0001	.0003	.0006	.0008	.0010	.0013
11	.0000	.0000	.0001	.0002	.0002	.0003
12	-.0001	-.0002	-.0003	-.0004	-.0005	-.0006
13	-.0001	-.0004	-.0007	-.0009	-.0012	-.0014
14	-.0002	-.0006	-.0010	-.0014	-.0017	-.0020
15	-.0003	-.0008	-.0012	-.0017	-.0021	-.0025
16	-.0003	-.0009	-.0014	-.0019	-.0024	-.0029
17	-.0003	-.0009	-.0015	-.0021	-.0026	-.0032
18	-.0003	-.0010	-.0016	-.0021	-.0027	-.0032

j	Shear flow, $q_{ij}L$, at station -					
	i = 0	i = 1	i = 2	i = 3	i = 4	i = 5
0	0.0523	0.0435	0.0329	0.0251	0.0193	0.0149
1	.0177	.0174	.0164	.0152	.0138	.0124
2	.0092	.0092	.0091	.0088	.0085	.0081
3	.0051	.0052	.0052	.0051	.0051	.0050
4	.0026	.0026	.0027	.0027	.0028	.0028
5	.0008	.0008	.0009	.0010	.0011	.0012
6	-.0006	-.0005	-.0004	-.0002	-.0001	.0000
7	-.0015	-.0014	-.0013	-.0012	-.0010	-.0009
8	-.0022	-.0021	-.0020	-.0018	-.0017	-.0016
9	-.0027	-.0026	-.0024	-.0023	-.0021	-.0020
10	-.0029	-.0028	-.0026	-.0025	-.0024	-.0022
11	-.0029	-.0028	-.0027	-.0026	-.0024	-.0023
12	-.0028	-.0027	-.0026	-.0024	-.0023	-.0022
13	-.0025	-.0024	-.0023	-.0022	-.0021	-.0020
14	-.0021	-.0020	-.0019	-.0018	-.0018	-.0017
15	-.0016	-.0015	-.0014	-.0014	-.0013	-.0013
16	-.0010	-.0009	-.0009	-.0008	-.0008	-.0008
17	-.0003	-.0003	-.0003	-.0003	-.0003	-.0003

TABLE 20.- LOAD DISTRIBUTION DUE TO A UNIT PERTURBATION LOAD - Concluded

$$\left[B = 1{,}000;\ C = 2 \times 10^4;\ m = 36\right]$$

(c) Shear perturbation load about shear panel (0,0)

j	Stringer load, p_{ij}/L, at station -					
	i = 1	i = 2	i = 3	i = 4	i = 5	i = 6
1	-0.4289	-0.3167	-0.2345	-0.1745	-0.1305	-0.0981
2	-.0088	-.0291	-.0387	-.0423	-.0425	-.0406
3	.0042	-.0033	-.0075	-.0104	-.0124	-.0136
4	.0069	.0016	-.0006	-.0021	-.0033	-.0042
5	.0078	.0035	.0019	.0009	.0002	-.0004
6	.0078	.0044	.0031	.0024	.0019	.0015
7	.0070	.0048	.0038	.0033	.0029	.0026
8	.0059	.0048	.0041	.0038	.0035	.0032
9	.0046	.0046	.0043	.0040	.0038	.0036
10	.0032	.0043	.0042	.0041	.0039	.0037
11	.0020	.0038	.0041	.0040	.0038	.0037
12	.0010	.0032	.0037	.0038	.0036	.0035
13	.0002	.0026	.0033	.0034	.0033	.0032
14	-.0003	.0021	.0028	.0029	.0029	.0028
15	-.0005	.0015	.0022	.0024	.0024	.0023
16	-.0005	.0011	.0016	.0017	.0017	.0017
17	-.0004	.0006	.0010	.0011	.0011	.0010
18	-.0001	.0002	.0003	.0003	.0004	.0004

j	Shear flow, q_{ij}, at station -					
	i = 0	i = 1	i = 2	i = 3	i = 4	i = 5
0	0.2165	0.0761	0.0633	0.0495	0.0384	0.0299
1	.0744	-.0361	-.0189	-.0106	-.0056	-.0025
2	.0919	-.0158	-.0093	-.0069	-.0054	-.0044
3	.0835	-.0082	-.0051	-.0040	-.0034	-.0032
4	.0696	-.0029	-.0029	-.0025	-.0023	-.0023
5	.0539	.0015	-.0013	-.0016	-.0016	-.0017
6	.0384	.0049	.0000	-.0009	-.0011	-.0013
7	.0244	.0071	.0010	-.0004	-.0007	-.0010
8	.0126	.0082	.0017	.0000	-.0005	-.0007
9	.0034	.0081	.0021	.0003	-.0002	-.0005
10	-.0030	.0071	.0021	.0004	-.0001	-.0003
11	-.0070	.0053	.0018	.0005	.0002	-.0002
12	-.0090	.0030	.0013	.0004	.0003	-.0001
13	-.0094	.0006	.0007	.0004	.0004	.0000
14	-.0089	-.0018	-.0001	.0002	.0004	.0001
15	-.0078	-.0038	-.0008	.0001	.0004	.0002
16	-.0067	-.0054	-.0013	.0000	.0005	.0002
17	-.0060	-.0064	-.0017	-.0001	.0004	.0003
18	-.0057	-.0068	-.0018	-.0001	.0004	.0003

TABLE 21.- LOAD DISTRIBUTION DUE TO A UNIT PERTURBATION LOAD

$\left[B = 8;\ C = 2 \times 10^5;\ m = 36\right]$

(a) Concentrated perturbation load on stringer $j = 0$ at ring $i = 0$

j	Stringer load, p_{ij}, at station -						
	i = 0	i = 1	i = 2	i = 3	i = 4	i = 5	i = 6
0	0.5000	0.0904	0.0856	0.0680	0.0603	0.0551	0.0515
1	0	.1221	.0759	.0663	.0587	.0540	.0506
2	0	.0617	.0663	.0589	.0544	.0508	.0481
3	0	.0245	.0458	.0480	.0470	.0454	.0439
4	0	.0054	.0248	.0341	.0372	.0380	.0380
5	0	-.0012	.0091	.0200	.0261	.0292	.0308
6	0	-.0019	.0006	.0085	.0154	.0199	.0228
7	0	-.0009	-.0023	.0012	.0066	.0113	.0149
8	0	-.0002	-.0023	-.0022	.0006	.0043	.0077
9	0	-.0001	-.0014	-.0030	-.0025	-.0005	.0021
10	0	-.0002	-.0008	-.0025	-.0035	-.0032	-.0018
11	0	-.0004	-.0007	-.0019	-.0034	-.0042	-.0040
12	0	-.0005	-.0008	-.0015	-.0029	-.0042	-.0049
13	0	-.0005	-.0010	-.0015	-.0025	-.0038	-.0050
14	0	-.0006	-.0012	-.0016	-.0023	-.0034	-.0047
15	0	-.0006	-.0013	-.0018	-.0024	-.0032	-.0043
16	0	-.0006	-.0013	-.0019	-.0025	-.0032	-.0041
17	0	-.0007	-.0013	-.0020	-.0026	-.0032	-.0039
18	0	-.0007	-.0013	-.0020	-.0027	-.0032	-.0039

j	Shear flow, $q_{ij}L$, at station -					
	i = 0	i = 1	i = 2	i = 3	i = 4	i = 5
0	0.2048	0.0024	0.0088	0.0038	0.0026	0.0018
1	.0828	.0486	.0184	.0114	.0073	.0052
2	.0210	.0440	.0257	.0160	.0109	.0078
3	-.0034	.0228	.0234	.0170	.0125	.0093
4	-.0089	.0034	.0141	.0140	.0116	.0093
5	-.0076	-.0069	.0032	.0079	.0085	.0077
6	-.0057	-.0094	-.0048	.0011	.0039	.0048
7	-.0048	-.0080	-.0082	-.0043	-.0008	.0012
8	-.0046	-.0060	-.0083	-.0072	-.0045	-.0022
9	-.0045	-.0046	-.0067	-.0076	-.0066	-.0047
10	-.0043	-.0040	-.0051	-.0066	-.0069	-.0061
11	-.0039	-.0037	-.0039	-.0051	-.0061	-.0062
12	-.0034	-.0033	-.0032	-.0038	-.0048	-.0054
13	-.0029	-.0029	-.0027	-.0028	-.0035	-.0042
14	-.0023	-.0023	-.0022	-.0021	-.0024	-.0030
15	-.0016	-.0017	-.0017	-.0015	-.0016	-.0019
16	-.0010	-.0010	-.0010	-.0010	-.0009	-.0010
17	-.0003	-.0003	-.0004	-.0003	-.0003	-.0003

TABLE 21.- LOAD DISTRIBUTION DUE TO A UNIT PERTURBATION LOAD - Continued

$$\left[B = 8;\ C = 2 \times 10^5;\ m = 36\right]$$

(b) Distributed perturbation load on stringer $j = 0$ between rings $i = 0$ and $i = 1$

j	Stringer load, p_{ij}, at station -					
	i = 1	i = 2	i = 3	i = 4	i = 5	i = 6
0	0.2241	0.0916	0.0754	0.0639	0.0575	0.0532
1	.0952	.0928	.0711	.0622	.0562	.0522
2	.0380	.0663	.0622	.0566	.0525	.0494
3	.0101	.0378	.0474	.0476	.0462	.0446
4	-.0005	.0160	.0302	.0359	.0377	.0381
5	-.0020	.0034	.0150	.0234	.0278	.0301
6	-.0008	-.0015	.0045	.0122	.0178	.0215
7	.0001	-.0021	-.0009	.0039	.0090	.0132
8	.0002	-.0013	-.0026	-.0010	.0025	.0061
9	.0000	-.0006	-.0023	-.0029	-.0016	.0008
10	-.0002	-.0004	-.0017	-.0031	-.0035	-.0026
11	-.0003	-.0005	-.0012	-.0027	-.0039	-.0042
12	-.0003	-.0007	-.0011	-.0022	-.0036	-.0046
13	-.0003	-.0008	-.0012	-.0019	-.0031	-.0044
14	-.0003	-.0009	-.0014	-.0020	-.0029	-.0041
15	-.0003	-.0009	-.0015	-.0021	-.0028	-.0038
16	-.0003	-.0010	-.0016	-.0022	-.0028	-.0036
17	-.0003	-.0010	-.0017	-.0023	-.0029	-.0036
18	-.0003	-.0010	-.0017	-.0024	-.0030	-.0035

j	Shear flow, $q_{ij}L$, at station -					
	i = 0	i = 1	i = 2	i = 3	i = 4	i = 5
0	0.2759	0.0663	0.0081	0.0057	0.0032	0.0022
1	.0855	.0686	.0299	.0146	.0092	.0062
2	.0094	.0403	.0340	.0203	.0132	.0092
3	-.0107	.0126	.0244	.0201	.0146	.0108
4	-.0098	-.0039	.0102	.0144	.0128	.0104
5	-.0058	-.0092	-.0015	.0061	.0084	.0081
6	-.0042	-.0085	-.0075	-.0016	.0027	.0045
7	-.0044	-.0063	-.0087	-.0064	-.0024	.0003
8	-.0048	-.0048	-.0074	-.0080	-.0059	-.0034
9	-.0048	-.0043	-.0056	-.0074	-.0072	-.0056
10	-.0044	-.0041	-.0044	-.0059	-.0069	-.0066
11	-.0039	-.0038	-.0037	-.0045	-.0057	-.0062
12	-.0034	-.0034	-.0032	-.0034	-.0043	-.0052
13	-.0028	-.0029	-.0028	-.0027	-.0031	-.0038
14	-.0023	-.0023	-.0023	-.0022	-.0022	-.0026
15	-.0017	-.0016	-.0017	-.0016	-.0015	-.0017
16	-.0010	-.0010	-.0010	-.0010	-.0009	-.0009
17	-.0004	-.0003	-.0004	-.0003	-.0003	-.0003

TABLE 21.- LOAD DISTRIBUTION DUE TO A UNIT PERTURBATION LOAD - Concluded

$$\left[B = 8;\ C = 2 \times 10^5;\ m = 36\right]$$

(c) Shear perturbation load about shear panel (0,0)

j	Stringer load, p_{ij}/L, at station -					
	i = 1	i = 2	i = 3	i = 4	i = 5	i = 6
1	-0.1039	0.0052	-0.0021	-0.0003	-0.0002	-0.0001
2	-.0040	-.0127	-.0021	-.0013	-.0007	-.0004
3	.0170	-.0058	-.0032	-.0015	-.0009	-.0006
4	.0106	.0021	-.0018	-.0013	-.0009	-.0006
5	.0013	.0047	.0005	-.0006	-.0006	-.0005
6	-.0027	.0030	.0019	.0004	-.0001	-.0003
7	-.0023	.0005	.0018	.0010	.0004	.0001
8	-.0006	-.0009	.0008	.0011	.0007	.0003
9	.0003	-.0010	-.0001	.0006	.0007	.0005
10	.0004	-.0005	-.0005	.0001	.0004	.0004
11	.0002	.0000	-.0005	-.0003	.0001	.0003
12	.0000	.0001	-.0002	-.0004	-.0001	.0001
13	-.0001	.0001	.0000	-.0003	-.0002	-.0001
14	.0000	.0000	.0001	-.0001	-.0002	-.0002
15	.0000	.0000	.0001	.0000	-.0001	-.0002
16	.0000	.0000	.0000	.0000	.0000	-.0001
17	.0000	.0000	.0000	.0000	.0000	-.0001
18	.0000	.0000	.0000	.0000	.0000	.0000

j	Shear flow, q_{ij}, at station -					
	i = 0	i = 1	i = 2	i = 3	i = 4	i = 5
0	0.8324	0.0787	-0.0003	0.0026	0.0009	0.0005
1	.0402	-.0304	.0070	.0008	.0008	.0004
2	.0482	-.0218	-.0035	.0001	.0001	.0002
3	.0142	.0010	-.0061	-.0015	-.0005	-.0002
4	-.0071	.0095	-.0022	-.0020	-.0009	-.0004
5	-.0097	.0062	.0020	-.0010	-.0009	-.0005
6	-.0043	.0004	.0031	.0006	-.0003	-.0004
7	.0002	-.0023	.0018	.0014	.0003	-.0001
8	.0015	-.0020	.0000	.0011	.0007	.0002
9	.0009	-.0007	-.0009	.0004	.0007	.0004
10	.0001	.0002	-.0008	-.0003	.0003	.0004
11	-.0002	.0004	-.0004	-.0005	.0000	.0002
12	-.0002	.0002	.0000	-.0004	-.0002	.0000
13	.0000	.0000	.0002	-.0002	-.0003	-.0001
14	.0000	.0000	.0001	.0000	-.0002	-.0002
15	.0000	-.0001	.0000	.0001	.0000	-.0001
16	.0000	.0000	.0000	.0000	.0000	.0000
17	.0000	.0000	.0000	.0000	.0000	.0000
18	.0000	.0000	.0000	.0000	.0000	.0000

TABLE 22.- LOAD DISTRIBUTION DUE TO A UNIT PERTURBATION LOAD

$$\left[B = 30;\ C = 2 \times 10^5;\ m = 36\right]$$

(a) Concentrated perturbation load on stringer $j = 0$ at ring $i = 0$

j	Stringer load, p_{ij}, at station -						
	i = 0	i = 1	i = 2	i = 3	i = 4	i = 5	i = 6
0	0.5000	0.1689	0.1020	0.0784	0.0665	0.0600	0.0557
1	0	.1002	.0860	.0723	.0634	.0580	.0542
2	0	.0431	.0583	.0583	.0553	.0524	.0499
3	0	.0191	.0355	.0425	.0444	.0443	.0435
4	0	.0073	.0195	.0282	.0330	.0350	.0357
5	0	.0018	.0090	.0166	.0223	.0256	.0275
6	0	-.0002	.0029	.0082	.0133	.0170	.0197
7	0	-.0006	-.0001	.0027	.0064	.0099	.0127
8	0	-.0005	-.0011	-.0003	.0018	.0044	.0070
9	0	-.0003	-.0013	-.0017	-.0010	.0007	.0027
10	0	-.0003	-.0011	-.0020	-.0023	-.0016	-.0003
11	0	-.0004	-.0010	-.0019	-.0028	-.0028	-.0023
12	0	-.0004	-.0010	-.0018	-.0028	-.0034	-.0035
13	0	-.0005	-.0010	-.0017	-.0027	-.0035	-.0041
14	0	-.0006	-.0011	-.0018	-.0026	-.0036	-.0044
15	0	-.0006	-.0012	-.0018	-.0026	-.0035	-.0045
16	0	-.0007	-.0013	-.0019	-.0026	-.0035	-.0046
17	0	-.0007	-.0013	-.0020	-.0026	-.0035	-.0046
18	0	-.0007	-.0014	-.0020	-.0026	-.0035	-.0046

j	Shear flow, $q_{ij}L$, at station -					
	i = 0	i = 1	i = 2	i = 3	i = 4	i = 5
0	0.1656	0.0334	0.0118	0.0059	0.0033	0.0021
1	.0653	.0477	.0254	.0148	.0087	.0059
2	.0222	.0326	.0254	.0178	.0116	.0084
3	.0030	.0162	.0184	.0159	.0118	.0091
4	-.0042	.0040	.0098	.0111	.0099	.0084
5	-.0061	-.0032	.0022	.0054	.0066	.0064
6	-.0059	-.0063	-.0031	.0003	.0029	.0038
7	-.0053	-.0068	-.0059	-.0035	-.0005	.0009
8	-.0048	-.0062	-.0067	-.0056	-.0032	-.0016
9	-.0045	-.0052	-.0063	-.0063	-.0049	-.0036
10	-.0042	-.0044	-.0054	-.0060	-.0056	-.0048
11	-.0039	-.0038	-.0044	-.0051	-.0056	-.0053
12	-.0034	-.0033	-.0035	-.0041	-.0050	-.0052
13	-.0029	-.0028	-.0028	-.0032	-.0042	-.0046
14	-.0023	-.0023	-.0022	-.0023	-.0032	-.0038
15	-.0017	-.0017	-.0016	-.0016	-.0022	-.0028
16	-.0010	-.0010	-.0010	-.0009	-.0013	-.0017
17	-.0003	-.0004	-.0003	-.0003	-.0004	-.0006

TABLE 22.- LOAD DISTRIBUTION DUE TO A UNIT PERTURBATION LOAD - Continued

$$\left[B = 30;\ C = 2 \times 10^5;\ m = 36\right]$$

(b) Distributed perturbation load on stringer $j = 0$ between rings $i = 0$ and $i = 1$

j	Stringer load, p_{ij}, at station -					
	i = 1	i = 2	i = 3	i = 4	i = 5	i = 6
0	0.2962	0.1296	0.0887	0.0719	0.0627	0.0569
1	.0688	.0935	.0787	.0676	.0603	.0553
2	.0242	.0528	.0587	.0568	.0537	.0508
3	.0091	.0283	.0396	.0437	.0445	.0440
4	.0026	.0136	.0242	.0309	.0343	.0359
5	.0002	.0052	.0130	.0197	.0243	.0274
6	-.0003	.0010	.0055	.0108	.0155	.0191
7	-.0002	-.0006	.0012	.0045	.0083	.0118
8	-.0001	-.0009	-.0009	.0006	.0031	.0058
9	-.0001	-.0008	-.0015	-.0014	-.0003	.0014
10	-.0001	-.0007	-.0016	-.0022	-.0022	-.0014
11	-.0002	-.0006	-.0014	-.0024	-.0030	-.0031
12	-.0002	-.0007	-.0014	-.0023	-.0032	-.0039
13	-.0003	-.0008	-.0014	-.0022	-.0032	-.0041
14	-.0003	-.0009	-.0014	-.0022	-.0031	-.0041
15	-.0003	-.0009	-.0015	-.0022	-.0030	-.0039
16	-.0003	-.0010	-.0016	-.0023	-.0030	-.0038
17	-.0003	-.0010	-.0017	-.0023	-.0030	-.0037
18	-.0003	-.0010	-.0017	-.0023	-.0030	-.0037

j	Shear flow, $q_{ij}L$, at station -					
	i = 0	i = 1	i = 2	i = 3	i = 4	i = 5
0	0.2038	0.0833	0.0204	0.0084	0.0046	0.0029
1	.0662	.0586	.0353	.0195	.0119	.0079
2	.0178	.0300	.0293	.0214	.0150	.0108
3	-.0003	.0108	.0180	.0173	.0143	.0112
4	-.0055	-.0002	.0074	.0107	.0108	.0096
5	-.0060	-.0052	-.0004	.0040	.0061	.0066
6	-.0053	-.0066	-.0048	-.0013	.0014	.0030
7	-.0048	-.0063	-.0066	-.0047	-.0023	-.0004
8	-.0046	-.0055	-.0066	-.0062	-.0048	-.0031
9	-.0045	-.0048	-.0058	-.0064	-.0059	-.0049
10	-.0043	-.0042	-.0049	-.0057	-.0060	-.0056
11	-.0039	-.0038	-.0041	-.0048	-.0054	-.0055
12	-.0034	-.0034	-.0034	-.0038	-.0044	-.0048
13	-.0029	-.0029	-.0028	-.0030	-.0034	-.0039
14	-.0023	-.0023	-.0022	-.0022	-.0025	-.0029
15	-.0017	-.0017	-.0016	-.0016	-.0017	-.0020
16	-.0010	-.0010	-.0010	-.0010	-.0010	-.0011
17	-.0004	-.0003	-.0003	-.0003	-.0003	-.0004

TABLE 22.- LOAD DISTRIBUTION DUE TO A UNIT PERTURBATION LOAD - Concluded

$$\left[B = 30;\ C = 2 \times 10^5;\ m = 36\right]$$

(c) Shear perturbation load about shear panel (0,0)

j	Stringer load, p_{ij}/L, at station -					
	i = 1	i = 2	i = 3	i = 4	i = 5	i = 6
1	-0.2098	-0.0317	-0.0078	-0.0029	-0.0014	-0.0008
2	-.0047	-.0276	-.0131	-.0063	-.0034	-.0020
3	.0241	-.0051	-.0080	-.0058	-.0038	-.0025
4	.0184	.0057	-.0016	-.0031	-.0028	-.0022
5	.0070	.0080	.0026	-.0002	-.0012	-.0014
6	-.0006	.0058	.0041	.0018	.0003	-.0003
7	-.0032	.0023	.0036	.0026	.0014	.0005
8	-.0025	-.0003	.0020	.0023	.0018	.0011
9	-.0010	-.0014	.0005	.0015	.0016	.0013
10	.0000	-.0013	-.0005	.0005	.0010	.0011
11	.0004	-.0008	-.0009	-.0002	.0004	.0007
12	.0003	-.0003	-.0008	-.0006	-.0001	.0003
13	.0001	.0001	-.0005	-.0006	-.0004	-.0001
14	.0000	.0001	-.0002	-.0005	-.0005	-.0003
15	-.0001	.0001	.0000	-.0002	-.0004	-.0004
16	.0000	.0000	.0001	-.0001	-.0003	-.0004
17	.0000	.0000	.0001	.0000	-.0002	-.0002
18	.0000	.0000	.0000	.0000	.0000	-.0001

j	Shear flow, q_{ij}, at station -					
	i = 0	i = 1	i = 2	i = 3	i = 4	i = 5
0	0.6567	0.1254	0.0259	0.0087	0.0040	0.0022
1	.0762	-.0526	.0020	.0037	.0025	.0016
2	.0856	-.0298	-.0124	-.0030	-.0004	.0002
3	.0375	-.0006	-.0095	-.0053	-.0024	-.0011
4	.0008	.0120	-.0022	-.0038	-.0027	-.0016
5	-.0133	.0111	.0032	-.0010	-.0017	-.0015
6	-.0120	.0047	.0048	.0014	-.0003	-.0008
7	-.0057	-.0008	.0036	.0024	.0009	.0000
8	-.0006	-.0031	.0013	.0021	.0014	.0007
9	.0015	-.0028	-.0006	.0011	.0013	.0010
10	.0014	-.0014	-.0014	.0001	.0008	.0009
11	.0006	-.0002	-.0013	-.0006	.0002	.0006
12	.0000	.0003	-.0007	-.0008	-.0003	.0002
13	-.0002	.0004	-.0002	-.0006	-.0005	-.0001
14	-.0002	.0002	.0001	-.0004	-.0005	-.0003
15	-.0001	.0001	.0002	-.0001	-.0003	-.0003
16	.0000	.0000	.0001	.0001	-.0001	-.0002
17	.0001	.0000	.0001	.0002	.0000	-.0002
18	.0001	.0000	.0000	.0002	.0001	-.0001

TABLE 23.- LOAD DISTRIBUTION DUE TO A UNIT PERTURBATION LOAD

$\left[B = 100;\ C = 2 \times 10^5;\ m = 36\right]$

(a) Concentrated perturbation load on stringer $j = 0$ at ring $i = 0$

j	Stringer load, p_{ij}, at station -						
	i = 0	i = 1	i = 2	i = 3	i = 4	i = 5	i = 6
0	0.5000	0.2600	0.1593	0.1127	0.0886	0.0747	0.0659
1	0	.0743	.0856	.0809	.0734	.0666	.0612
2	0	.0265	.0429	.0503	.0526	.0524	.0512
3	0	.0126	.0238	.0316	.0365	.0393	.0406
4	0	.0064	.0138	.0202	.0251	.0287	.0312
5	0	.0031	.0078	.0126	.0168	.0203	.0231
6	0	.0014	.0040	.0074	.0107	.0138	.0164
7	0	.0005	.0018	.0038	.0062	.0086	.0109
8	0	.0000	.0004	.0015	.0029	.0047	.0064
9	0	-.0002	-.0003	.0000	.0007	.0017	.0030
10	0	-.0003	-.0007	-.0009	-.0008	-.0003	.0004
11	0	-.0004	-.0009	-.0014	-.0017	-.0017	-.0015
12	0	-.0004	-.0010	-.0016	-.0022	-.0026	-.0028
13	0	-.0005	-.0010	-.0018	-.0025	-.0031	-.0036
14	0	-.0006	-.0012	-.0019	-.0026	-.0034	-.0040
15	0	-.0006	-.0012	-.0019	-.0027	-.0035	-.0043
16	0	-.0007	-.0013	-.0020	-.0027	-.0035	-.0044
17	0	-.0007	-.0014	-.0020	-.0028	-.0036	-.0045
18	0	-.0007	-.0014	-.0020	-.0028	-.0036	-.0045

j	Shear flow, $q_{ij}L$, at station -					
	i = 0	i = 1	i = 2	i = 3	i = 4	i = 5
0	0.1200	0.0504	0.0233	0.0120	0.0069	0.0044
1	.0457	.0390	.0281	.0195	.0137	.0098
2	.0192	.0226	.0206	.0172	.0139	.0110
3	.0066	.0114	.0128	.0124	.0111	.0097
4	.0003	.0040	.0064	.0074	.0076	.0072
5	-.0028	-.0007	.0016	.0032	.0041	.0044
6	-.0042	-.0034	-.0017	-.0001	.0010	.0018
7	-.0046	-.0047	-.0037	-.0025	-.0014	-.0005
8	-.0047	-.0051	-.0048	-.0040	-.0031	-.0023
9	-.0045	-.0049	-.0051	-.0048	-.0042	-.0035
10	-.0042	-.0045	-.0049	-.0049	-.0046	-.0042
11	-.0038	-.0040	-.0044	-.0046	-.0046	-.0044
12	-.0034	-.0035	-.0038	-.0040	-.0042	-.0042
13	-.0029	-.0029	-.0031	-.0034	-.0036	-.0037
14	-.0023	-.0023	-.0024	-.0026	-.0028	-.0030
15	-.0017	-.0017	-.0017	-.0018	-.0020	-.0022
16	-.0010	-.0010	-.0010	-.0011	-.0012	-.0014
17	-.0003	-.0003	-.0003	-.0004	-.0004	-.0004

TABLE 23.- LOAD DISTRIBUTION DUE TO A UNIT PERTURBATION LOAD - Continued

$\left[B = 100;\ C = 2 \times 10^5;\ m = 36\right]$

(b) Distributed perturbation load on stringer $j = 0$ between rings $i = 0$ and $i = 1$

j	Stringer load, p_{ij}, at station -					
	i = 1	i = 2	i = 3	i = 4	i = 5	i = 6
0	0.3632	0.2032	0.1334	0.0995	0.0811	0.0700
1	.0454	.0822	.0837	.0771	.0699	.0638
2	.0140	.0356	.0471	.0517	.0526	.0519
3	.0062	.0185	.0280	.0343	.0380	.0400
4	.0030	.0101	.0171	.0228	.0270	.0300
5	.0013	.0054	.0102	.0148	.0187	.0218
6	.0005	.0026	.0057	.0091	.0123	.0151
7	.0002	.0010	.0027	.0050	.0074	.0098
8	.0000	.0002	.0009	.0022	.0038	.0056
9	-.0001	-.0003	-.0002	.0003	.0012	.0023
10	-.0001	-.0005	-.0008	-.0009	-.0006	.0000
11	-.0002	-.0006	-.0011	-.0015	-.0017	-.0016
12	-.0002	-.0007	-.0013	-.0019	-.0024	-.0027
13	-.0003	-.0008	-.0014	-.0021	-.0028	-.0033
14	-.0003	-.0009	-.0015	-.0022	-.0030	-.0037
15	-.0003	-.0009	-.0016	-.0023	-.0031	-.0039
16	-.0003	-.0010	-.0016	-.0024	-.0031	-.0040
17	-.0003	-.0010	-.0017	-.0024	-.0032	-.0040
18	-.0003	-.0010	-.0017	-.0024	-.0032	-.0040

j	Shear flow, $q_{ij}L$, at station -					
	i = 0	i = 1	i = 2	i = 3	i = 4	i = 5
0	0.1368	0.0800	0.0349	0.0169	0.0092	0.0055
1	.0459	.0432	.0334	.0235	.0164	.0116
2	.0180	.0216	.0218	.0190	.0155	.0124
3	.0055	.0094	.0123	.0127	.0118	.0104
4	-.0004	.0022	.0054	.0070	.0076	.0074
5	-.0031	-.0019	.0005	.0025	.0037	.0043
6	-.0042	-.0039	-.0026	-.0009	.0005	.0014
7	-.0045	-.0048	-.0043	-.0031	-.0020	-.0009
8	-.0045	-.0049	-.0050	-.0044	-.0036	-.0027
9	-.0044	-.0047	-.0050	-.0049	-.0045	-.0038
10	-.0042	-.0043	-.0047	-.0049	-.0048	-.0044
11	-.0038	-.0039	-.0042	-.0045	-.0046	-.0045
12	-.0034	-.0034	-.0036	-.0039	-.0041	-.0042
13	-.0029	-.0029	-.0030	-.0032	-.0035	-.0037
14	-.0023	-.0023	-.0023	-.0025	-.0027	-.0030
15	-.0017	-.0017	-.0017	-.0018	-.0019	-.0021
16	-.0010	-.0010	-.0010	-.0010	-.0012	-.0013
17	-.0003	-.0003	-.0003	-.0004	-.0004	-.0004

TABLE 23.- LOAD DISTRIBUTION DUE TO A UNIT PERTURBATION LOAD - Concluded

$$\left[B = 100;\ C = 2 \times 10^5;\ m = 36\right]$$

(c) Shear perturbation load about shear panel (0,0)

j	Stringer load, p_{ij}/L, at station -					
	i = 1	i = 2	i = 3	i = 4	i = 5	i = 6
1	-0.3066	-0.1174	-0.0476	-0.0210	-0.0102	-0.0054
2	-.0042	-.0363	-.0306	-.0213	-.0142	-.0094
3	.0229	-.0022	-.0099	-.0109	-.0096	-.0078
4	.0211	.0080	.0004	-.0031	-.0044	-.0045
5	.0127	.0100	.0048	.0014	-.0006	-.0017
6	.0047	.0083	.0060	.0035	.0017	.0004
7	-.0004	.0051	.0053	.0041	.0028	.0017
8	-.0025	.0021	.0038	.0037	.0031	.0023
9	-.0025	-.0001	.0020	.0027	.0027	.0023
10	-.0016	-.0012	.0005	.0015	.0020	.0020
11	-.0006	-.0015	-.0005	.0005	.0011	.0014
12	.0000	-.0012	-.0010	-.0003	.0003	.0008
13	.0003	-.0007	-.0010	-.0007	-.0002	.0002
14	.0003	-.0003	-.0008	-.0008	-.0006	-.0002
15	.0001	.0000	-.0005	-.0008	-.0007	-.0004
16	.0000	.0001	-.0003	-.0006	-.0006	-.0005
17	.0000	.0001	-.0001	-.0004	-.0004	-.0003
18	.0000	.0000	.0000	-.0001	-.0002	-.0001

j	Shear flow, q_{ij}, at station -					
	i = 0	i = 1	i = 2	i = 3	i = 4	i = 5
0	0.4876	0.1291	0.0580	0.0272	0.0140	0.0080
1	.1008	-.0601	-.0118	.0006	.0032	.0032
2	.1092	-.0280	-.0175	-.0087	-.0039	-.0015
3	.0633	-.0028	-.0098	-.0078	-.0052	-.0033
4	.0212	.0102	-.0022	-.0043	-.0039	-.0032
5	-.0043	.0130	.0029	-.0008	-.0020	-.0021
6	-.0137	.0094	.0052	.0016	-.0001	-.0008
7	-.0128	.0039	.0050	.0028	.0012	.0002
8	-.0079	-.0007	.0033	.0029	.0019	.0010
9	-.0030	-.0031	.0012	.0022	.0019	.0014
10	.0002	-.0034	-.0005	.0011	.0015	.0013
11	.0013	-.0025	-.0014	.0001	.0008	.0010
12	.0013	-.0013	-.0016	-.0006	.0002	.0006
13	.0007	-.0003	-.0013	-.0009	-.0002	.0002
14	.0002	.0002	-.0008	-.0009	-.0005	-.0002
15	-.0001	.0004	-.0003	-.0006	-.0006	-.0004
16	-.0001	.0003	.0001	-.0003	-.0006	-.0006
17	-.0001	.0002	.0003	-.0001	-.0005	-.0007
18	-.0001	.0001	.0004	.0000	-.0005	-.0007

TABLE 24.- LOAD DISTRIBUTION DUE TO A UNIT PERTURBATION LOAD

$[B = 300;\ C = 2 \times 10^5;\ m = 36]$

(a) Concentrated perturbation load on stringer $j = 0$ at ring $i = 0$

j	Stringer load, p_{ij}, at station -						
	i = 0	i = 1	i = 2	i = 3	i = 4	i = 5	i = 6
0	0.5000	0.3368	0.2384	0.1776	0.1390	0.1136	0.0963
1	0	.0518	.0733	.0801	.0800	.0770	.0729
2	0	.0157	.0283	.0372	.0431	.0467	.0486
3	0	.0076	.0147	.0208	.0258	.0298	.0328
4	0	.0044	.0089	.0131	.0169	.0202	.0230
5	0	.0027	.0057	.0087	.0115	.0141	.0165
6	0	.0016	.0036	.0058	.0079	.0099	.0118
7	0	.0009	.0022	.0037	.0052	.0067	.0082
8	0	.0005	.0012	.0021	.0031	.0042	.0054
9	0	.0002	.0005	.0010	.0016	.0023	.0030
10	0	.0000	.0000	.0001	.0004	.0007	.0012
11	0	-.0002	-.0004	-.0006	-.0006	-.0005	-.0004
12	0	-.0003	-.0007	-.0010	-.0013	-.0015	-.0016
13	0	-.0004	-.0009	-.0014	-.0018	-.0022	-.0025
14	0	-.0005	-.0011	-.0016	-.0022	-.0027	-.0032
15	0	-.0006	-.0012	-.0018	-.0024	-.0031	-.0037
16	0	-.0006	-.0013	-.0019	-.0026	-.0033	-.0040
17	0	-.0007	-.0013	-.0020	-.0027	-.0035	-.0042
18	0	-.0007	-.0013	-.0020	-.0028	-.0035	-.0043

j	Shear flow, $q_{ij}L$, at station -					
	i = 0	i = 1	i = 2	i = 3	i = 4	i = 5
0	0.0816	0.0492	0.0304	0.0193	0.0127	0.0086
1	.0298	.0277	.0236	.0194	.0157	.0126
2	.0141	.0151	.0146	.0135	.0122	.0107
3	.0065	.0080	.0085	.0085	.0082	.0077
4	.0022	.0035	.0043	.0048	.0049	.0049
5	-.0005	.0004	.0013	.0019	.0023	.0025
6	-.0021	-.0016	-.0008	-.0002	.0003	.0006
7	-.0031	-.0028	-.0023	-.0017	-.0013	-.0009
8	-.0035	-.0035	-.0032	-.0028	-.0024	-.0020
9	-.0037	-.0038	-.0037	-.0034	-.0031	-.0028
10	-.0037	-.0038	-.0038	-.0037	-.0035	-.0032
11	-.0035	-.0036	-.0037	-.0036	-.0035	-.0034
12	-.0031	-.0032	-.0034	-.0034	-.0034	-.0033
13	-.0027	-.0028	-.0029	-.0030	-.0030	-.0030
14	-.0022	-.0022	-.0023	-.0024	-.0025	-.0025
15	-.0016	-.0016	-.0017	-.0018	-.0018	-.0019
16	-.0010	-.0010	-.0010	-.0011	-.0011	-.0012
17	-.0003	-.0003	-.0004	-.0004	-.0004	-.0004

TABLE 24.- LOAD DISTRIBUTION DUE TO A UNIT PERTURBATION LOAD - Continued

$[B = 300;\ C = 2 \times 10^5;\ m = 36]$

(b) Distributed perturbation load on stringer $j = 0$ between rings $i = 0$ and $i = 1$

j	Stringer load, p_{ij}, at station -					
	i = 1	i = 2	i = 3	i = 4	i = 5	i = 6
0	0.4116	0.2837	0.2057	0.1569	0.1254	0.1044
1	.0293	.0642	.0775	.0804	.0786	.0750
2	.0080	.0223	.0330	.0404	.0451	.0477
3	.0038	.0112	.0179	.0234	.0279	.0313
4	.0021	.0067	.0110	.0150	.0186	.0216
5	.0013	.0042	.0072	.0101	.0129	.0154
6	.0008	.0026	.0047	.0068	.0089	.0109
7	.0004	.0015	.0029	.0044	.0060	.0075
8	.0002	.0008	.0016	.0026	.0037	.0048
9	.0001	.0003	.0007	.0013	.0019	.0027
10	.0000	-.0001	.0000	.0002	.0005	.0009
11	-.0001	-.0003	-.0005	-.0006	-.0005	-.0004
12	-.0002	-.0005	-.0009	-.0012	-.0014	-.0015
13	-.0002	-.0007	-.0011	-.0016	-.0020	-.0023
14	-.0003	-.0008	-.0013	-.0019	-.0024	-.0029
15	-.0003	-.0009	-.0015	-.0021	-.0028	-.0034
16	-.0003	-.0009	-.0016	-.0023	-.0030	-.0037
17	-.0003	-.0010	-.0016	-.0024	-.0031	-.0038
18	-.0003	-.0010	-.0017	-.0024	-.0031	-.0039

j	Shear flow, $q_{ij}L$, at station -					
	i = 0	i = 1	i = 2	i = 3	i = 4	i = 5
0	0.0884	0.0640	0.0390	0.0244	0.0158	0.0105
1	.0298	.0290	.0257	.0215	.0175	.0141
2	.0138	.0148	.0149	.0141	.0129	.0115
3	.0062	.0074	.0083	.0086	.0084	.0080
4	.0019	.0028	.0039	.0046	.0049	.0049
5	-.0007	.0000	.0009	.0016	.0021	.0024
6	-.0022	-.0019	-.0012	-.0005	.0000	.0004
7	-.0031	-.0030	-.0026	-.0020	-.0015	-.0011
8	-.0035	-.0036	-.0034	-.0030	-.0026	-.0022
9	-.0037	-.0038	-.0038	-.0036	-.0032	-.0030
10	-.0036	-.0038	-.0038	-.0038	-.0036	-.0034
11	-.0034	-.0036	-.0037	-.0037	-.0036	-.0035
12	-.0031	-.0032	-.0033	-.0034	-.0034	-.0033
13	-.0027	-.0027	-.0028	-.0029	-.0030	-.0030
14	-.0022	-.0022	-.0023	-.0024	-.0025	-.0025
15	-.0016	-.0016	-.0017	-.0017	-.0018	-.0018
16	-.0010	-.0010	-.0010	-.0011	-.0011	-.0011
17	-.0003	-.0003	-.0003	-.0004	-.0004	-.0004

TABLE 24.- LOAD DISTRIBUTION DUE TO A UNIT PERTURBATION LOAD - Concluded

$$\left[B = 300;\ C = 2 \times 10^5;\ m = 36\right]$$

(c) Shear perturbation load about shear panel (0,0)

j	Stringer load, p_{ij}/L, at station -					
	i = 1	i = 2	i = 3	i = 4	i = 5	i = 6
1	-0.3752	-0.2169	-0.1267	-0.0754	-0.0459	-0.0287
2	-.0033	-.0348	-.0400	-.0367	-.0310	-.0251
3	.0182	-.0004	-.0083	-.0118	-.0130	-.0129
4	.0191	.0078	.0018	-.0017	-.0038	-.0051
5	.0147	.0097	.0055	.0026	.0006	-.0008
6	.0089	.0090	.0065	.0044	.0028	.0015
7	.0037	.0070	.0062	.0049	.0037	.0027
8	.0002	.0046	.0051	.0046	.0039	.0032
9	-.0016	.0023	.0037	.0038	.0035	.0031
10	-.0020	.0005	.0022	.0028	.0029	.0028
11	-.0017	-.0007	.0009	.0017	.0021	.0023
12	-.0011	-.0012	-.0001	.0007	.0013	.0017
13	-.0005	-.0013	-.0007	.0000	.0006	.0011
14	.0000	-.0011	-.0010	-.0005	.0001	.0006
15	.0002	-.0008	-.0010	-.0007	-.0002	.0003
16	.0002	-.0005	-.0008	-.0007	-.0003	.0001
17	.0002	-.0002	-.0005	-.0005	-.0003	.0000
18	.0001	-.0001	-.0002	-.0002	-.0001	.0000

j	Shear flow, q_{ij}, at station -					
	i = 0	i = 1	i = 2	i = 3	i = 4	i = 5
0	0.3601	0.1036	0.0688	0.0437	0.0282	0.0187
1	.1106	-.0547	-.0214	-.0076	-.0013	.0014
2	.1170	-.0231	-.0162	-.0108	-.0071	-.0044
3	.0806	-.0045	-.0084	-.0073	-.0059	-.0046
4	.0423	.0069	-.0024	-.0038	-.0037	-.0034
5	.0129	.0119	.0019	-.0009	-.0017	-.0020
6	-.0048	.0117	.0044	.0012	-.0001	-.0007
7	-.0122	.0084	.0052	.0025	.0011	.0003
8	-.0126	.0040	.0046	.0030	.0018	.0010
9	-.0095	.0001	.0032	.0028	.0021	.0014
10	-.0054	-.0024	.0016	.0022	.0020	.0015
11	-.0020	-.0034	.0000	.0014	.0016	.0014
12	.0002	-.0033	-.0010	.0005	.0010	.0010
13	.0011	-.0025	-.0015	-.0002	.0004	.0005
14	.0011	-.0014	-.0015	-.0008	-.0002	.0000
15	.0007	-.0005	-.0012	-.0011	-.0007	-.0005
16	.0002	.0002	-.0009	-.0012	-.0011	-.0008
17	-.0001	.0006	-.0006	-.0013	-.0013	-.0011
18	-.0003	.0007	-.0004	-.0013	-.0014	-.0012

TABLE 25.- LOAD DISTRIBUTION DUE TO A UNIT PERTURBATION LOAD

$\left[B = 1{,}000;\ C = 2 \times 10^5;\ m = 36\right]$

(a) Concentrated perturbation load on stringer $j = 0$ at ring $i = 0$

j	Stringer load, p_{ij}, at station -						
	i = 0	i = 1	i = 2	i = 3	i = 4	i = 5	i = 6
0	0.5000	0.4004	0.3251	0.2679	0.2241	0.1903	0.1640
1	0	.0325	.0533	.0661	.0735	.0772	.0786
2	0	.0086	.0165	.0234	.0293	.0341	.0380
3	0	.0042	.0082	.0120	.0156	.0188	.0218
4	0	.0025	.0051	.0075	.0099	.0122	.0143
5	0	.0017	.0034	.0052	.0069	.0085	.0101
6	0	.0012	.0024	.0037	.0049	.0061	.0074
7	0	.0008	.0017	.0026	.0035	.0044	.0053
8	0	.0005	.0011	.0017	.0024	.0030	.0037
9	0	.0003	.0006	.0010	.0014	.0019	.0023
10	0	.0001	.0002	.0004	.0006	.0009	.0011
11	0	.0000	.0000	-.0001	.0000	.0000	.0001
12	0	-.0002	-.0003	-.0005	-.0006	-.0007	-.0008
13	0	-.0003	-.0006	-.0008	-.0010	-.0013	-.0015
14	0	-.0004	-.0007	-.0011	-.0015	-.0018	-.0021
15	0	-.0004	-.0009	-.0013	-.0018	-.0022	-.0026
16	0	-.0005	-.0010	-.0015	-.0020	-.0025	-.0029
17	0	-.0005	-.0010	-.0016	-.0021	-.0026	-.0031
18	0	-.0005	-.0011	-.0016	-.0021	-.0027	-.0032

j	Shear flow, $q_{ij}L$, at station -					
	i = 0	i = 1	i = 2	i = 3	i = 4	i = 5
0	0.0498	0.0376	0.0286	0.0219	0.0169	0.0132
1	.0173	.0168	.0158	.0145	.0131	.0118
2	.0089	.0090	.0089	.0086	.0083	.0079
3	.0046	.0049	.0050	.0051	.0050	.0050
4	.0020	.0024	.0026	.0027	.0028	.0028
5	.0003	.0006	.0009	.0010	.0011	.0012
6	-.0008	-.0006	-.0004	-.0002	-.0001	.0000
7	-.0016	-.0015	-.0013	-.0011	-.0010	-.0009
8	-.0022	-.0021	-.0019	-.0018	-.0016	-.0015
9	-.0024	-.0024	-.0023	-.0022	-.0021	-.0020
10	-.0026	-.0026	-.0025	-.0024	-.0023	-.0022
11	-.0025	-.0025	-.0025	-.0024	-.0024	-.0023
12	-.0023	-.0024	-.0024	-.0023	-.0023	-.0022
13	-.0020	-.0021	-.0021	-.0021	-.0020	-.0020
14	-.0017	-.0017	-.0018	-.0017	-.0017	-.0017
15	-.0012	-.0013	-.0013	-.0013	-.0013	-.0012
16	-.0008	-.0008	-.0008	-.0008	-.0008	-.0008
17	-.0002	-.0003	-.0003	-.0003	-.0003	-.0003

TABLE 25.- LOAD DISTRIBUTION DUE TO A UNIT PERTURBATION LOAD - Continued

$\left[B = 1{,}000;\ C = 2 \times 10^5;\ m = 36\right]$

(b) Distributed perturbation load on stringer $j = 0$ between rings $i = 0$ and $i = 1$

j	Stringer load, p_{ij}, at station -					
	i = 1	i = 2	i = 3	i = 4	i = 5	i = 6
0	0.4479	0.3610	0.2953	0.2451	0.2065	0.1766
1	.0174	.0437	.0602	.0701	.0756	.0781
2	.0043	.0126	.0200	.0264	.0318	.0361
3	.0021	.0062	.0101	.0138	.0172	.0203
4	.0013	.0038	.0063	.0087	.0110	.0132
5	.0008	.0026	.0043	.0060	.0077	.0093
6	.0006	.0018	.0031	.0043	.0055	.0068
7	.0004	.0012	.0021	.0030	.0040	.0049
8	.0003	.0008	.0014	.0021	.0027	.0034
9	.0001	.0005	.0008	.0012	.0017	.0021
10	.0001	.0002	.0003	.0005	.0008	.0010
11	.0000	-.0001	-.0001	.0000	.0000	.0001
12	-.0001	-.0003	-.0004	-.0005	-.0006	-.0007
13	-.0001	-.0004	-.0007	-.0010	-.0012	-.0014
14	-.0002	-.0006	-.0009	-.0013	-.0016	-.0020
15	-.0002	-.0007	-.0011	-.0015	-.0020	-.0024
16	-.0002	-.0007	-.0012	-.0017	-.0022	-.0027
17	-.0003	-.0008	-.0013	-.0018	-.0024	-.0029
18	-.0003	-.0008	-.0013	-.0019	-.0024	-.0029

j	Shear flow, $q_{ij}L$, at station -					
	i = 0	i = 1	i = 2	i = 3	i = 4	i = 5
0	0.0521	0.0434	0.0329	0.0251	0.0193	0.0149
1	.0173	.0172	.0164	.0152	.0138	.0125
2	.0087	.0089	.0089	.0088	.0085	.0081
3	.0045	.0048	.0050	.0051	.0051	.0050
4	.0020	.0022	.0025	.0027	.0028	.0028
5	.0003	.0005	.0008	.0010	.0011	.0012
6	-.0009	-.0007	-.0005	-.0003	-.0001	.0000
7	-.0017	-.0016	-.0014	-.0012	-.0011	-.0010
8	-.0022	-.0021	-.0020	-.0008	-.0017	-.0016
9	-.0024	-.0024	-.0024	-.0022	-.0021	-.0020
10	-.0026	-.0026	-.0025	-.0024	-.0024	-.0023
11	-.0025	-.0025	-.0025	-.0025	-.0024	-.0023
12	-.0023	-.0024	-.0024	-.0024	-.0023	-.0022
13	-.0020	-.0021	-.0021	-.0021	-.0020	-.0020
14	-.0017	-.0017	-.0017	-.0017	-.0017	-.0017
15	-.0012	-.0013	-.0013	-.0013	-.0012	-.0013
16	-.0008	-.0008	-.0008	-.0008	-.0008	-.0008
17	-.0002	-.0003	-.0003	-.0003	-.0003	-.0003

TABLE 25.- LOAD DISTRIBUTION DUE TO A UNIT PERTURBATION LOAD - Concluded

$$\left[B = 1{,}000;\ C = 2 \times 10^5;\ m = 36\right]$$

(c) Shear perturbation load about shear panel (0,0)

j	Stringer load, p_{ij}/L, at station -					
	i = 1	i = 2	i = 3	i = 4	i = 5	i = 6
1	-0.4263	-0.3158	-0.2340	-0.1742	-0.1303	-0.0980
2	-.0020	-.0266	-.0372	-.0414	-.0419	-.0403
3	.0127	.0005	-.0052	-.0090	-.0116	-.0132
4	.0149	.0061	.0022	-.0004	-.0022	-.0036
5	.0135	.0079	.0048	.0028	.0014	.0003
6	.0104	.0081	.0058	.0042	.0030	.0022
7	.0069	.0073	.0059	.0047	.0038	.0031
8	.0037	.0059	.0054	.0047	.0041	.0036
9	.0012	.0043	.0046	.0043	.0040	.0037
10	-.0004	.0027	.0036	.0038	.0037	.0036
11	-.0013	.0013	.0025	.0030	.0033	.0033
12	-.0015	.0002	.0015	.0023	.0027	.0030
13	-.0013	-.0005	.0007	.0016	.0022	.0025
14	-.0010	-.0009	.0001	.0011	.0017	.0020
15	-.0006	-.0010	-.0002	.0006	.0012	.0016
16	-.0003	-.0009	-.0003	.0003	.0008	.0011
17	-.0001	-.0006	-.0003	.0001	.0004	.0007
18	.0000	-.0002	-.0001	.0000	.0001	.0002

j	Shear flow, q_{ij}, at station -					
	i = 0	i = 1	i = 2	i = 3	i = 4	i = 5
0	0.2580	0.0680	0.0590	0.0465	0.0363	0.0285
1	.1107	-.0426	-.0228	-.0133	-.0075	-.0038
2	.1148	-.0180	-.0121	-.0091	-.0070	-.0054
3	.0893	-.0058	-.0064	-.0054	-.0045	-.0038
4	.0596	.0030	-.0024	-.0028	-.0026	-.0024
5	.0326	.0086	.0006	-.0008	-.0012	-.0014
6	.0118	.0109	.0029	.0007	-.0001	-.0005
7	-.0020	.0105	.0044	.0019	.0008	.0002
8	-.0093	.0083	.0048	.0026	.0014	.0007
9	-.0117	.0051	.0046	.0029	.0018	.0010
10	-.0108	.0020	.0037	.0027	.0018	.0011
11	-.0082	-.0006	.0025	.0022	.0016	.0010
12	-.0053	-.0023	.0011	.0014	.0011	.0008
13	-.0028	-.0030	-.0001	.0005	.0006	.0005
14	-.0008	-.0030	-.0012	-.0004	-.0001	.0001
15	.0004	-.0026	-.0020	-.0012	-.0006	-.0003
16	.0010	-.0020	-.0026	-.0019	-.0011	-.0006
17	.0013	-.0016	-.0029	-.0023	-.0014	-.0008
18	.0013	-.0014	-.0030	-.0024	-.0016	-.0008

TABLE 26.- LOAD DISTRIBUTION DUE TO A UNIT PERTURBATION LOAD

$$\left[B = 8;\ C = 2 \times 10^6;\ m = 36\right]$$

(a) Concentrated perturbation load on stringer $j = 0$ at ring $i = 0$

j	Stringer load, p_{ij}, at station -						
	i = 0	i = 1	i = 2	i = 3	i = 4	i = 5	i = 6
0	0.5000	0.1265	0.1066	0.0859	0.0755	0.0683	0.0632
1	0	.1386	.0944	.0820	.0726	.0663	.0617
2	0	.0497	.0723	.0678	.0638	.0600	.0568
3	0	.0061	.0348	.0461	.0489	.0491	.0484
4	0	-.0035	.0071	.0220	.0304	.0348	.0370
5	0	-.0016	-.0030	.0045	.0132	.0197	.0240
6	0	.0001	-.0028	-.0028	.0017	.0071	.0120
7	0	.0002	-.0008	-.0031	-.0030	-.0005	.0029
8	0	-.0001	.0000	-.0014	-.0031	-.0034	-.0021
9	0	-.0002	-.0001	-.0005	-.0018	-.0032	-.0037
10	0	-.0002	-.0004	-.0004	-.0009	-.0021	-.0032
11	0	-.0002	-.0005	-.0006	-.0008	-.0014	-.0024
12	0	-.0003	-.0005	-.0008	-.0010	-.0012	-.0018
13	0	-.0003	-.0006	-.0009	-.0012	-.0014	-.0017
14	0	-.0003	-.0006	-.0010	-.0013	-.0016	-.0018
15	0	-.0003	-.0007	-.0010	-.0014	-.0018	-.0021
16	0	-.0004	-.0007	-.0011	-.0015	-.0018	-.0022
17	0	-.0004	-.0007	-.0011	-.0015	-.0019	-.0023
18	0	-.0004	-.0008	-.0011	-.0015	-.0019	-.0023

j	Shear flow, $q_{ij}L$, at station -					
	i = 0	i = 1	i = 2	i = 3	i = 4	i = 5
0	0.1867	0.0100	0.0103	0.0052	0.0036	0.0026
1	.0481	.0542	.0228	.0146	.0099	.0072
2	-.0016	.0316	.0272	.0187	.0137	.0104
3	-.0076	.0028	.0160	.0159	.0134	.0110
4	-.0041	-.0079	.0011	.0075	.0091	.0088
5	-.0025	-.0065	-.0064	-.0012	.0026	.0045
6	-.0026	-.0035	-.0064	-.0057	-.0029	-.0003
7	-.0029	-.0025	-.0041	-.0058	-.0054	-.0038
8	-.0028	-.0026	-.0027	-.0041	-.0051	-.0050
9	-.0026	-.0026	-.0024	-.0027	-.0038	-.0045
10	-.0024	-.0024	-.0023	-.0022	-.0026	-.0034
11	-.0022	-.0022	-.0022	-.0020	-.0020	-.0024
12	-.0019	-.0019	-.0019	-.0019	-.0018	-.0018
13	-.0016	-.0016	-.0016	-.0016	-.0016	-.0015
14	-.0013	-.0013	-.0013	-.0013	-.0013	-.0012
15	-.0009	-.0009	-.0009	-.0009	-.0009	-.0009
16	-.0006	-.0005	-.0006	-.0006	-.0006	-.0006
17	-.0002	-.0002	-.0002	-.0002	-.0002	-.0002

TABLE 26.- LOAD DISTRIBUTION DUE TO A UNIT PERTURBATION LOAD - Continued

$$\left[B = 8;\ C = 2 \times 10^6;\ m = 36\right]$$

(b) Distributed perturbation load on stringer $j = 0$ between rings $i = 0$ and $i = 1$

j	Stringer load, p_{ij}, at station -					
	i = 1	i = 2	i = 3	i = 4	i = 5	i = 6
0	0.2528	0.1180	0.0949	0.0804	0.0717	0.0657
1	.1049	.1114	.0880	.0769	.0693	.0638
2	.0247	.0656	.0700	.0658	.0618	.0584
3	-.0025	.0222	.0416	.0478	.0491	.0488
4	-.0028	.0005	.0152	.0267	.0328	.0360
5	.0032	-.0034	.0003	.0090	.0166	.0220
6	.0005	-.0013	-.0034	-.0008	.0044	.0096
7	.0000	.0001	-.0021	-.0033	-.0019	.0012
8	-.0002	.0001	-.0006	-.0024	-.0034	-.0029
9	-.0001	-.0002	-.0002	-.0011	-.0025	-.0035
10	-.0001	-.0003	-.0004	-.0006	-.0015	-.0027
11	-.0001	-.0003	-.0006	-.0007	-.0010	-.0018
12	-.0001	-.0004	-.0007	-.0009	-.0011	-.0015
13	-.0002	-.0004	-.0008	-.0011	-.0013	-.0015
14	-.0002	-.0005	-.0008	-.0012	-.0015	-.0018
15	-.0002	-.0005	-.0009	-.0012	-.0016	-.0019
16	-.0002	-.0005	-.0009	-.0013	-.0016	-.0020
17	-.0002	-.0006	-.0009	-.0013	-.0017	-.0020
18	-.0002	-.0006	-.0009	-.0013	-.0017	-.0021

j	Shear flow, $q_{ij}L$, at station -					
	i = 0	i = 1	i = 2	i = 3	i = 4	i = 5
0	0.2472	0.0674	0.0116	0.0073	0.0043	0.0030
1	.0373	.0610	.0349	.0184	.0120	.0084
2	-.0122	.0201	.0305	.0225	.0160	.0119
3	-.0071	-.0047	.0112	.0163	.0147	.0122
4	-.0015	-.0080	-.0035	.0049	.0085	.0090
5	-.0020	-.0043	-.0073	-.0038	.0009	.0037
6	-.0031	-.0024	-.0052	-.0064	-.0043	-.0015
7	-.0031	-.0025	-.0031	-.0051	-.0057	-.0046
8	-.0027	-.0028	-.0025	-.0034	-.0047	-.0052
9	-.0025	-.0026	-.0025	-.0025	-.0032	-.0042
10	-.0024	-.0024	-.0024	-.0022	-.0024	-.0030
11	-.0022	-.0022	-.0022	-.0021	-.0020	-.0022
12	-.0019	-.0019	-.0019	-.0019	-.0018	-.0018
13	-.0016	-.0016	-.0016	-.0016	-.0016	-.0015
14	-.0013	-.0013	-.0013	-.0013	-.0013	-.0013
15	-.0009	-.0009	-.0009	-.0009	-.0009	-.0010
16	-.0005	-.0006	-.0006	-.0006	-.0006	-.0006
17	-.0002	-.0002	-.0002	-.0002	-.0002	-.0002

TABLE 26.- LOAD DISTRIBUTION DUE TO A UNIT PERTURBATION LOAD - Concluded

$$\left[B = 8;\ C = 2 \times 10^6;\ m = 36\right]$$

(c) Shear perturbation load about shear panel (0,0)

j	Stringer load, p_{ij}/L, at station -					
	i = 1	i = 2	i = 3	i = 4	i = 5	i = 6
1	-0.0883	0.0022	-0.0020	-0.0005	-0.0003	-0.0002
2	.0158	-.0129	-.0025	-.0015	-.0008	-.0005
3	.0156	.0006	-.0027	-.0015	-.0010	-.0006
4	-.0008	.0058	.0006	-.0006	-.0006	-.0005
5	-.0038	.0020	.0024	.0007	.0001	-.0002
6	-.0007	-.0012	.0013	.0012	.0006	.0003
7	.0007	-.0011	-.0003	.0007	.0007	.0005
8	.0003	-.0001	-.0007	-.0001	.0003	.0004
9	-.0001	.0002	-.0003	-.0004	-.0001	.0002
10	-.0001	.0001	.0001	-.0002	-.0003	-.0001
11	.0000	.0000	.0001	.0000	-.0002	-.0002
12	.0000	.0000	.0000	.0001	.0000	-.0001
13	.0000	.0000	.0000	.0000	.0000	.0000
14	.0000	.0000	.0000	.0000	.0000	.0000
15	.0000	.0000	.0000	.0000	.0000	.0000
16	.0000	.0000	.0000	.0000	.0000	.0000
17	.0000	.0000	.0000	.0000	.0000	.0000
18	.0000	.0000	.0000	.0000	.0000	.0000

j	Shear flow, q_{ij}, at station -					
	i = 0	i = 1	i = 2	i = 3	i = 4	i = 5
0	0.8771	0.0570	0.0004	0.0019	0.0007	0.0004
1	.0538	-.0335	.0046	.0004	.0005	.0003
2	.0221	-.0048	-.0058	-.0006	-.0002	.0000
3	-.0090	.0101	-.0025	-.0018	-.0007	-.0003
4	-.0075	.0035	.0027	-.0006	-.0007	-.0004
5	.0001	-.0023	.0023	.0011	.0000	-.0002
6	.0015	-.0018	-.0002	.0011	.0006	.0002
7	.0001	.0000	-.0010	.0001	.0006	.0004
8	-.0004	.0004	-.0004	-.0005	.0001	.0003
9	-.0002	.0001	.0001	-.0003	-.0002	.0000
10	.0000	-.0001	.0001	.0000	-.0002	-.0002
11	.0000	-.0001	.0000	.0000	-.0001	-.0002
12	.0000	.0000	.0000	.0000	.0000	.0000
13	.0000	.0000	.0000	.0000	.0000	.0000
14	.0000	.0000	.0000	.0000	.0000	.0000
15	.0000	.0000	.0000	.0000	.0000	.0000
16	.0000	.0000	.0000	.0000	.0000	.0000
17	.0000	.0000	.0000	.0000	.0000	.0000
18	.0000	.0000	.0000	.0000	.0000	.0000

TABLE 27.- LOAD DISTRIBUTION DUE TO A UNIT PERTURBATION LOAD

$$\left[B = 30;\ C = 2 \times 10^6;\ m = 36\right]$$

(a) Concentrated perturbation load on stringer $j = 0$ at ring $i = 0$

j	Stringer load, p_{ij}, at station -						
	i = 0	i = 1	i = 2	i = 3	i = 4	i = 5	i = 6
0	0.5000	0.1889	0.1197	0.0939	0.0802	0.0717	0.0657
1	0	.1113	.0998	.0856	.0757	.0687	.0636
2	0	.0396	.0618	.0650	.0630	.0601	.0573
3	0	.0093	.0288	.0405	.0455	.0471	.0473
4	0	-.0003	.0085	.0193	.0272	.0321	.0350
5	0	-.0012	-.0001	.0055	.0122	.0179	.0222
6	0	-.0004	-.0018	-.0007	.0028	.0071	.0112
7	0	.0000	-.0011	-.0021	-.0015	.0005	.0033
8	0	.0000	-.0004	-.0015	-.0024	-.0022	-.0011
9	0	-.0001	-.0002	-.0008	-.0019	-.0027	-.0028
10	0	-.0002	-.0003	-.0006	-.0012	-.0021	-.0029
11	0	-.0002	-.0004	-.0006	-.0010	-.0016	-.0024
12	0	-.0003	-.0005	-.0008	-.0010	-.0014	-.0020
13	0	-.0003	-.0006	-.0009	-.0011	-.0014	-.0018
14	0	-.0003	-.0007	-.0010	-.0013	-.0016	-.0019
15	0	-.0004	-.0007	-.0011	-.0014	-.0017	-.0020
16	0	-.0004	-.0007	-.0011	-.0015	-.0018	-.0022
17	0	-.0004	-.0008	-.0011	-.0015	-.0019	-.0023
18	0	-.0004	-.0008	-.0011	-.0015	-.0019	-.0023

j	Shear flow, $q_{ij}L$, at station -					
	i = 0	i = 1	i = 2	i = 3	i = 4	i = 5
0	0.1556	0.0346	0.0129	0.0068	0.0043	0.0030
1	.0443	.0461	.0271	.0167	.0113	.0081
2	.0047	.0239	.0239	.0187	.0142	.0110
3	-.0046	.0044	.0122	.0137	.0126	.0108
4	-.0044	-.0044	.0014	.0058	.0076	.0079
5	-.0031	-.0055	-.0042	-.0009	.0019	.0036
6	-.0027	-.0041	-.0053	-.0044	-.0024	-.0005
7	-.0027	-.0030	-.0043	-.0050	-.0044	-.0033
8	-.0027	-.0026	-.0032	-.0041	-.0046	-.0044
9	-.0026	-.0025	-.0025	-.0031	-.0038	-.0042
10	-.0024	-.0024	-.0023	-.0024	-.0029	-.0034
11	-.0022	-.0022	-.0021	-.0021	-.0022	-.0026
12	-.0019	-.0019	-.0019	-.0018	-.0018	-.0020
13	-.0016	-.0016	-.0016	-.0016	-.0015	-.0015
14	-.0013	-.0013	-.0013	-.0013	-.0012	-.0012
15	-.0009	-.0009	-.0009	-.0009	-.0009	-.0009
16	-.0006	-.0006	-.0006	-.0006	-.0006	-.0006
17	-.0002	-.0002	-.0002	-.0002	-.0002	-.0002

TABLE 27.- LOAD DISTRIBUTION DUE TO A UNIT PERTURBATION LOAD - Continued

$$\left[B = 30;\ C = 2 \times 10^6;\ m = 36\right]$$

(b) Distributed perturbation load on stringer $j = 0$ between rings $i = 0$ and $i = 1$

j	Stringer load, p_{ij}, at station -					
	i = 1	i = 2	i = 3	i = 4	i = 5	i = 6
0	0.3099	0.1485	0.1053	0.0865	0.0757	0.0685
1	.0753	.1064	.0923	.0803	.0720	.0660
2	.0202	.0532	.0641	.0642	.0616	.0586
3	.0024	.0197	.0354	.0434	.0465	.0473
4	-.0011	.0036	.0141	.0235	.0299	.0337
5	-.0005	-.0012	.0025	.0089	.0152	.0202
6	.0001	-.0012	-.0015	.0009	.0049	.0092
7	.0001	-.0004	-.0017	-.0020	-.0006	.0019
8	.0000	-.0001	-.0009	-.0020	-.0024	-.0018
9	-.0001	-.0001	-.0005	-.0013	-.0023	-.0028
10	-.0001	-.0003	-.0004	-.0009	-.0017	-.0026
11	-.0001	-.0003	-.0005	-.0008	-.0013	-.0020
12	-.0001	-.0004	-.0007	-.0009	-.0012	-.0017
13	-.0002	-.0004	-.0008	-.0010	-.0013	-.0016
14	-.0002	-.0005	-.0008	-.0011	-.0014	-.0017
15	-.0002	-.0005	-.0009	-.0012	-.0016	-.0019
16	-.0002	-.0006	-.0009	-.0013	-.0017	-.0020
17	-.0002	-.0006	-.0009	-.0013	-.0017	-.0021
18	-.0002	-.0006	-.0009	-.0013	-.0017	-.0021

j	Shear flow, $q_{ij}L$, at station -					
	i = 0	i = 1	i = 2	i = 3	i = 4	i = 5
0	0.1901	0.0807	0.0216	0.0094	0.0054	0.0036
1	.0395	.0496	.0357	.0214	.0138	.0096
2	-.0008	.0166	.0247	.0213	.0164	.0125
3	-.0056	-.0007	.0090	.0133	.0132	.0117
4	-.0034	-.0053	-.0015	.0039	.0069	.0079
5	-.0024	-.0046	-.0052	-.0026	.0006	.0029
6	-.0027	-.0032	-.0049	-.0050	-.0034	-.0014
7	-.0029	-.0027	-.0036	-.0048	-.0048	-.0039
8	-.0028	-.0026	-.0028	-.0037	-.0044	-.0045
9	-.0026	-.0026	-.0025	-.0028	-.0035	-.0040
10	-.0024	-.0024	-.0023	-.0023	-.0026	-.0031
11	-.0021	-.0022	-.0022	-.0021	-.0021	-.0024
12	-.0019	-.0019	-.0019	-.0019	-.0018	-.0019
13	-.0016	-.0016	-.0016	-.0016	-.0016	-.0015
14	-.0013	-.0013	-.0013	-.0013	-.0013	-.0012
15	-.0009	-.0009	-.0009	-.0009	-.0009	-.0009
16	-.0005	-.0006	-.0006	-.0006	-.0006	-.0006
17	-.0002	-.0002	-.0002	-.0002	-.0002	-.0002

TABLE 27.- LOAD DISTRIBUTION DUE TO A UNIT PERTURBATION LOAD - Concluded

$$\left[B = 30;\ C = 2 \times 10^6;\ m = 36\right]$$

(c) Shear perturbation load about shear panel (0,0)

j	Stringer load, p_{ij}/L, at station -					
	i = 1	i = 2	i = 3	i = 4	i = 5	i = 6
1	-0.1895	-0.0316	-0.0080	-0.0031	-0.0015	-0.0008
2	.0258	-.0224	-.0125	-.0064	-.0036	-.0023
3	.0303	.0047	-.0047	-.0047	-.0035	-.0024
4	.0054	.0111	.0033	-.0005	-.0016	-.0017
5	-.0053	.0052	.0054	.0026	.0007	-.0002
6	-.0037	-.0007	.0030	.0031	.0020	.0010
7	-.0003	-.0023	.0000	.0017	.0019	.0016
8	.0008	-.0012	-.0012	.0000	.0009	.0012
9	.0004	-.0001	-.0010	-.0008	-.0001	.0005
10	-.0001	.0003	-.0003	-.0007	-.0006	-.0002
11	-.0001	.0001	.0001	-.0003	-.0005	-.0004
12	.0000	.0000	.0001	.0000	-.0003	-.0004
13	.0000	.0000	.0000	.0001	.0000	-.0002
14	.0000	.0000	.0000	.0001	.0000	-.0001
15	.0000	.0000	.0000	.0000	.0000	.0000
16	.0000	.0000	.0000	.0000	.0000	.0001
17	.0000	.0000	.0000	.0000	.0000	.0000
18	.0000	.0000	.0000	.0000	.0000	.0000

j	Shear flow, q_{ij}, at station -					
	i = 0	i = 1	i = 2	i = 3	i = 4	i = 5
0	0.7274	0.0994	0.0211	0.0068	0.0031	0.0017
1	.1064	-.0585	-.0025	.0018	.0015	.0010
2	.0548	-.0103	-.0124	-.0042	-.0013	-.0003
3	-.0058	.0153	-.0030	-.0042	-.0025	-.0014
4	-.0166	.0096	.0048	-.0003	-.0015	-.0013
5	-.0060	-.0009	.0046	.0024	.0004	-.0004
6	.0014	-.0039	.0009	.0023	.0015	.0006
7	.0019	-.0019	-.0014	.0007	.0013	.0010
8	.0003	.0001	-.0013	-.0006	.0004	.0007
9	-.0004	.0005	-.0004	-.0008	-.0004	.0001
10	-.0003	.0002	.0002	-.0004	-.0006	-.0002
11	.0000	-.0001	.0002	.0000	-.0004	-.0004
12	.0000	-.0001	.0001	.0002	-.0001	-.0002
13	.0000	.0000	.0000	.0001	-.0001	-.0001
14	.0000	.0000	.0000	.0000	.0000	.0000
15	.0000	.0000	.0000	.0000	.0000	.0000
16	.0000	.0000	.0000	.0000	.0000	.0000
17	.0000	.0000	.0000	.0000	.0000	.0000
18	.0000	.0000	.0000	.0000	.0000	.0000

TABLE 28.- LOAD DISTRIBUTION DUE TO A UNIT PERTURBATION LOAD

$$\left[B = 100;\ C = 2 \times 10^6;\ m = 36\right]$$

(a) Concentrated perturbation load on stringer $j = 0$ at ring $i = 0$

j	Stringer load, p_{ij}, at station -						
	i = 0	i = 1	i = 2	i = 3	i = 4	i = 5	i = 6
0	0.5000	0.2683	0.1691	0.1226	0.0982	0.0839	0.0746
1	0	.0798	.0933	.0893	.0819	.0749	.0690
2	0	.0267	.0456	.0546	.0578	.0580	.0569
3	0	.0095	.0216	.0310	.0373	.0410	.0431
4	0	.0026	.0089	.0158	.0218	.0265	.0300
5	0	.0003	.0026	.0066	.0110	.0152	.0188
6	0	-.0001	.0001	.0017	.0042	.0072	.0101
7	0	-.0001	-.0005	-.0004	.0006	.0022	.0041
8	0	-.0001	-.0005	-.0009	-.0010	-.0005	.0004
9	0	-.0001	-.0004	-.0009	-.0014	-.0016	-.0014
10	0	-.0002	-.0003	-.0008	-.0013	-.0018	-.0021
11	0	-.0002	-.0004	-.0007	-.0012	-.0017	-.0022
12	0	-.0003	-.0005	-.0008	-.0011	-.0016	-.0022
13	0	-.0003	-.0006	-.0009	-.0012	-.0016	-.0021
14	0	-.0003	-.0007	-.0010	-.0013	-.0016	-.0020
15	0	-.0004	-.0007	-.0011	-.0014	-.0017	-.0021
16	0	-.0004	-.0007	-.0011	-.0015	-.0018	-.0022
17	0	-.0004	-.0008	-.0011	-.0015	-.0019	-.0022
18	0	-.0004	-.0008	-.0011	-.0015	-.0019	-.0023

j	Shear flow, $q_{ij}L$, at station -					
	i = 0	i = 1	i = 2	i = 3	i = 4	i = 5
0	0.1158	0.0496	0.0232	0.0122	0.0072	0.0046
1	.0361	.0361	.0273	.0196	.0142	.0105
2	.0093	.0172	.0183	.0164	.0139	.0115
3	-.0001	.0051	.0088	.0102	.0102	.0095
4	-.0027	-.0012	.0019	.0042	.0055	.0061
5	-.0030	-.0035	-.0021	-.0003	.0013	.0024
6	-.0029	-.0037	-.0037	-.0038	-.0016	-.0005
7	-.0028	-.0033	-.0038	-.0038	-.0032	-.0025
8	-.0027	-.0029	-.0034	-.0037	-.0037	-.0034
9	-.0026	-.0026	-.0028	-.0032	-.0035	-.0036
10	-.0024	-.0024	-.0024	-.0027	-.0030	-.0032
11	-.0022	-.0022	-.0021	-.0023	-.0025	-.0027
12	-.0019	-.0019	-.0019	-.0019	-.0020	-.0022
13	-.0016	-.0016	-.0016	-.0016	-.0016	-.0017
14	-.0013	-.0013	-.0013	-.0013	-.0013	-.0013
15	-.0009	-.0009	-.0009	-.0009	-.0009	-.0009
16	-.0006	-.0006	-.0006	-.0006	-.0006	-.0005
17	-.0002	-.0002	-.0002	-.0002	-.0002	-.0002

TABLE 28.- LOAD DISTRIBUTION DUE TO A UNIT PERTURBATION LOAD - Continued

$$\left[B = 100;\ C = 2 \times 10^6;\ m = 36\right]$$

(b) Distributed perturbation load on stringer $j = 0$ between rings $i = 0$ and $i = 1$

j	Stringer load, p_{ij}, at station -					
	i = 1	i = 2	i = 3	i = 4	i = 5	i = 6
0	0.3683	0.2125	0.1433	0.1093	0.0905	0.0789
1	.0485	.0889	.0918	.0856	.0783	.0718
2	.0137	.0371	.0507	.0565	.0580	.0575
3	.0041	.0157	.0266	.0344	.0393	.0421
4	.0009	.0056	.0124	.0189	.0243	.0283
5	.0000	.0013	.0045	.0088	.0131	.0170
6	.0000	-.0001	.0008	.0029	.0057	.0087
7	.0000	-.0003	-.0005	.0000	.0013	.0031
8	.0000	-.0003	-.0007	-.0010	-.0008	-.0001
9	.0000	-.0002	-.0006	-.0012	-.0015	-.0015
10	.0000	-.0003	-.0005	-.0010	-.0016	-.0020
11	-.0001	-.0003	-.0005	-.0009	-.0015	-.0020
12	-.0001	-.0004	-.0006	-.0010	-.0014	-.0019
13	-.0001	-.0005	-.0007	-.0010	-.0014	-.0018
14	-.0002	-.0005	-.0008	-.0011	-.0015	-.0018
15	-.0002	-.0005	-.0009	-.0012	-.0016	-.0019
16	-.0002	-.0006	-.0009	-.0013	-.0016	-.0020
17	-.0002	-.0006	-.0010	-.0013	-.0017	-.0021
18	-.0002	-.0006	-.0010	-.0013	-.0017	-.0021

j	Shear flow, $q_{ij}L$, at station -					
	i = 0	i = 1	i = 2	i = 3	i = 4	i = 5
0	0.1317	0.0779	0.0346	0.0170	0.0094	0.0058
1	.0346	.0375	.0317	.0233	.0167	.0122
2	.0073	.0141	.0181	.0175	.0152	.0127
3	-.0010	.0025	.0072	.0096	.0103	.0099
4	-.0027	-.0022	.0004	.0031	.0049	.0058
5	-.0028	-.0035	-.0029	-.0012	.0006	.0019
6	-.0027	-.0033	-.0038	-.0033	-.0022	-.0011
7	-.0027	-.0030	-.0036	-.0038	-.0035	-.0029
8	-.0027	-.0027	-.0031	-.0036	-.0037	-.0036
9	-.0026	-.0026	-.0027	-.0030	-.0034	-.0036
10	-.0024	-.0024	-.0024	-.0026	-.0029	-.0031
11	-.0022	-.0022	-.0022	-.0022	-.0024	-.0026
12	-.0019	-.0019	-.0019	-.0019	-.0019	-.0021
13	-.0016	-.0016	-.0016	-.0016	-.0016	-.0016
14	-.0013	-.0013	-.0013	-.0013	-.0013	-.0013
15	-.0009	-.0009	-.0009	-.0009	-.0009	-.0009
16	-.0006	-.0006	-.0006	-.0006	-.0006	-.0006
17	-.0002	-.0002	-.0002	-.0002	-.0002	-.0002

TABLE 28.- LOAD DISTRIBUTION DUE TO A UNIT PERTURBATION LOAD - Concluded

$\left[B = 100;\ C = 2 \times 10^6;\ m = 36\right]$

(c) Shear perturbation load about shear panel (0,0)

j	Stringer load, p_{ij}/L, at station -					
	i = 1	i = 2	i = 3	i = 4	i = 5	i = 6
1	-0.2893	-0.1141	-0.0466	-0.0206	-0.0100	-0.0054
2	.0265	-.0266	-.0269	-.0197	-.0135	-.0091
3	.0381	.0099	-.0035	-.0075	-.0078	-.0068
4	.0161	.0156	.0070	.0014	-.0015	-.0027
5	-.0004	.0099	.0087	.0054	.0026	.0008
6	-.0050	.0025	.0057	.0055	.0041	.0027
7	-.0032	-.0017	.0019	.0034	.0036	.0031
8	-.0006	-.0024	-.0007	.0011	.0021	.0024
9	.0005	-.0015	-.0016	-.0006	.0005	.0012
10	.0005	-.0004	-.0013	-.0011	-.0005	.0001
11	.0001	.0001	-.0006	-.0010	-.0009	-.0005
12	-.0001	.0002	-.0001	-.0006	-.0008	-.0007
13	-.0001	.0001	.0001	-.0002	-.0005	-.0006
14	.0000	.0000	.0001	.0000	-.0002	-.0004
15	.0000	.0000	.0000	.0001	.0000	-.0001
16	.0000	.0000	.0000	.0001	.0001	.0000
17	.0000	.0000	.0000	.0000	.0001	.0000
18	.0000	.0000	.0000	.0000	.0000	.0000

j	Shear flow, q_{ij}, at station -					
	i = 0	i = 1	i = 2	i = 3	i = 4	i = 5
0	0.5660	0.1086	0.0506	0.0235	0.0118	0.0066
1	.1447	-.0666	-.0169	-.0025	.0012	.0019
2	.0917	-.0136	-.0166	-.0097	-.0050	-.0024
3	.0155	.0147	-.0032	-.0056	-.0048	-.0034
4	-.0166	.0151	.0054	.0000	-.0019	-.0022
5	-.0158	.0048	.0066	.0033	.0009	-.0003
6	-.0057	-.0027	.0034	.0035	.0022	.0011
7	.0007	-.0043	-.0002	.0020	.0021	.0016
8	.0020	-.0025	-.0019	.0001	.0010	.0012
9	.0010	-.0005	-.0017	-.0009	.0000	.0006
10	.0000	.0004	-.0009	-.0010	-.0006	-.0001
11	-.0003	.0004	-.0001	-.0006	-.0007	-.0005
12	-.0002	.0001	.0002	-.0002	-.0005	-.0005
13	.0000	.0000	.0002	.0001	-.0002	-.0004
14	.0001	.0000	.0001	.0002	.0000	-.0002
15	.0001	.0000	.0000	.0001	.0001	.0000
16	.0000	.0000	.0000	.0000	.0001	.0000
17	.0000	.0000	.0000	.0000	.0000	.0001
18	.0000	.0000	.0000	.0000	.0000	.0001

TABLE 29.- LOAD DISTRIBUTION DUE TO A UNIT PERTURBATION LOAD

$\left[B = 300;\ C = 2 \times 10^6;\ m = 36\right]$

(a) Concentrated perturbation load on stringer $j = 0$ at ring $i = 0$

j	Stringer load, p_{ij}, at station -						
	i = 0	i = 1	i = 2	i = 3	i = 4	i = 5	i = 6
0	0.5000	0.3397	0.2424	0.1822	0.1438	0.1184	0.1012
1	0	.0540	.0766	.0840	.0842	.0814	.0774
2	0	.0163	.0298	.0395	.0459	.0497	.0517
3	0	.0070	.0145	.0211	.0266	.0309	.0342
4	0	.0032	.0074	.0118	.0158	.0194	.0226
5	0	.0014	.0036	.0063	.0091	.0119	.0145
6	0	.0006	.0016	.0031	.0049	.0068	.0087
7	0	.0002	.0005	.0012	.0022	.0033	.0047
8	0	.0000	.0000	.0002	.0006	.0011	.0019
9	0	-.0001	-.0002	-.0003	-.0003	-.0002	.0001
10	0	-.0001	-.0003	-.0006	-.0008	-.0009	-.0009
11	0	-.0002	-.0004	-.0007	-.0010	-.0013	-.0015
12	0	-.0003	-.0005	-.0008	-.0012	-.0015	-.0019
13	0	-.0003	-.0006	-.0009	-.0013	-.0016	-.0020
14	0	-.0003	-.0007	-.0010	-.0013	-.0017	-.0021
15	0	-.0004	-.0007	-.0011	-.0014	-.0018	-.0022
16	0	-.0004	-.0007	-.0011	-.0015	-.0019	-.0023
17	0	-.0004	-.0008	-.0011	-.0015	-.0019	-.0023
18	0	-.0004	-.0008	-.0012	-.0015	-.0019	-.0023

j	Shear flow, $q_{ij}L$, at station -					
	i = 0	i = 1	i = 2	i = 3	i = 4	i = 5
0	0.0802	0.0486	0.0301	0.0192	0.0127	0.0086
1	.0262	.0260	.0227	.0190	.0155	.0126
2	.0099	.0125	.0131	.0126	.0117	.0106
3	.0028	.0050	.0064	.0071	.0074	.0073
4	-.0004	.0008	.0021	.0031	.0037	.0042
5	-.0018	-.0014	-.0006	.0002	.0010	.0016
6	-.0023	-.0024	-.0021	-.0015	-.0010	-.0004
7	-.0025	-.0028	-.0028	-.0025	-.0021	-.0017
8	-.0026	-.0027	-.0029	-.0029	-.0028	-.0025
9	-.0025	-.0026	-.0028	-.0029	-.0029	-.0028
10	-.0024	-.0024	-.0025	-.0027	-.0028	-.0028
11	-.0022	-.0021	-.0022	-.0024	-.0025	-.0026
12	-.0019	-.0019	-.0019	-.0020	-.0021	-.0022
13	-.0016	-.0016	-.0016	-.0016	-.0017	-.0018
14	-.0013	-.0013	-.0013	-.0013	-.0013	-.0014
15	-.0010	-.0009	-.0010	-.0009	-.0010	-.0010
16	-.0006	-.0006	-.0006	-.0006	-.0006	-.0006
17	-.0002	-.0002	-.0002	-.0002	-.0002	-.0002

TABLE 29.- LOAD DISTRIBUTION DUE TO A UNIT PERTURBATION LOAD - Continued

$[B = 300;\ C = 2 \times 10^6;\ m = 36]$

(b) Distributed perturbation load on stringer $j = 0$ between rings $i = 0$ and $i = 1$

j	Stringer load, p_{ij}, at station -					
	i = 1	i = 2	i = 3	i = 4	i = 5	i = 6
0	0.4132	0.2872	0.2100	0.1616	0.1303	0.1093
1	.0305	.0670	.0811	.0845	.0830	.0794
2	.0083	.0234	.0350	.0429	.0479	.0508
3	.0034	.0108	.0179	.0240	.0288	.0326
4	.0015	.0053	.0096	.0138	.0177	.0211
5	.0006	.0024	.0050	.0077	.0105	.0132
6	.0003	.0010	.0023	.0039	.0058	.0078
7	.0001	.0003	.0008	.0016	.0027	.0040
8	.0000	.0000	.0001	.0003	.0008	.0015
9	.0000	-.0001	-.0003	-.0003	-.0003	.0000
10	-.0001	-.0002	-.0005	-.0007	-.0009	-.0009
11	-.0001	-.0003	-.0006	-.0009	-.0012	-.0014
12	-.0001	-.0003	-.0007	-.0010	-.0013	-.0017
13	-.0002	-.0004	-.0007	-.0011	-.0014	-.0018
14	-.0002	-.0005	-.0008	-.0012	-.0015	-.0019
15	-.0002	-.0005	-.0009	-.0012	-.0016	-.0020
16	-.0002	-.0006	-.0009	-.0013	-.0017	-.0021
17	-.0002	-.0006	-.0010	-.0013	-.0017	-.0021
18	-.0002	-.0006	-.0010	-.0013	-.0017	-.0021

j	Shear flow, $q_{ij}L$, at station -					
	i = 0	i = 1	i = 2	i = 3	i = 4	i = 5
0	0.0868	0.0630	0.0386	0.0242	0.0157	0.0105
1	.0258	.0265	.0244	.0208	.0172	.0140
2	.0092	.0114	.0129	.0129	.0122	.0111
3	.0024	.0040	.0058	.0068	.0073	.0073
4	-.0005	.0002	.0015	.0026	.0034	.0039
5	-.0017	-.0017	-.0010	-.0002	.0006	.0013
6	-.0022	-.0024	-.0023	-.0018	-.0012	-.0007
7	-.0025	-.0026	-.0028	-.0027	-.0023	-.0020
8	-.0026	-.0026	-.0028	-.0029	-.0028	-.0026
9	-.0025	-.0025	-.0027	-.0028	-.0029	-.0029
10	-.0024	-.0024	-.0025	-.0026	-.0027	-.0028
11	-.0022	-.0022	-.0022	-.0023	-.0024	-.0025
12	-.0019	-.0019	-.0019	-.0020	-.0021	-.0021
13	-.0016	-.0016	-.0016	-.0016	-.0017	-.0017
14	-.0013	-.0013	-.0013	-.0013	-.0013	-.0013
15	-.0010	-.0009	-.0010	-.0009	-.0010	-.0009
16	-.0006	-.0006	-.0006	-.0006	-.0006	-.0005
17	-.0002	-.0002	-.0002	-.0002	-.0002	-.0002

TABLE 29.- LOAD DISTRIBUTION DUE TO A UNIT PERTURBATION LOAD - Concluded

$$\left[B = 300;\ C = 2 \times 10^6;\ m = 36\right]$$

(c) Shear perturbation load about shear panel (0,0)

j	Stringer load, p_{ij}/L, at station -					
	i = 1	i = 2	i = 3	i = 4	i = 5	i = 6
1	-0.3630	-0.2133	-0.1250	-0.0744	-0.0453	-0.0283
2	.0214	-.0251	-.0349	-.0337	-.0291	-.0238
3	.0364	.0114	-.0010	-.0071	-.0098	-.0107
4	.0229	.0170	.0091	.0037	.0002	-.0021
5	.0076	.0133	.0106	.0074	.0046	.0025
6	-.0014	.0070	.0083	.0074	.0059	.0044
7	-.0039	.0016	.0047	.0055	.0053	.0046
8	-.0029	-.0014	.0014	.0030	.0037	.0038
9	-.0011	-.0022	-.0007	.0009	.0019	.0025
10	.0001	-.0017	-.0015	-.0005	.0004	.0011
11	.0004	-.0009	-.0015	-.0012	-.0006	.0000
12	.0003	-.0002	-.0010	-.0012	-.0010	-.0006
13	.0001	.0001	-.0005	-.0009	-.0010	-.0009
14	.0000	.0001	-.0001	-.0005	-.0010	-.0009
15	-.0001	.0001	.0001	-.0002	-.0005	-.0007
16	.0000	.0000	.0001	.0000	-.0002	-.0004
17	.0000	.0000	.0001	.0000	-.0001	-.0002
18	.0000	.0000	.0000	.0000	.0000	-.0001

j	Shear flow, q_{ij}, at station -					
	i = 0	i = 1	i = 2	i = 3	i = 4	i = 5
0	0.4336	0.0890	0.0626	0.0400	0.0257	0.0168
1	.1597	-.0607	-.0257	-.0105	-.0035	-.0002
2	.1168	-.0142	-.0159	-.0117	-.0081	-.0054
3	.0440	.0108	-.0035	-.0056	-.0054	-.0046
4	-.0019	.0167	.0044	-.0002	-.0019	-.0024
5	-.0171	.0110	.0070	.0031	.0009	-.0003
6	-.0143	.0027	.0057	.0040	.0024	.0012
7	-.0065	-.0028	.0026	.0032	.0026	.0018
8	-.0008	-.0043	-.0002	.0016	.0019	.0018
9	.0014	-.0032	-.0018	.0001	.0009	.0012
10	.0013	-.0015	-.0020	-.0009	.0000	.0005
11	.0005	-.0002	-.0014	-.0012	-.0006	-.0001
12	-.0001	.0004	-.0006	-.0010	-.0008	-.0005
13	-.0003	.0004	.0000	-.0006	-.0007	-.0006
14	-.0002	.0002	.0002	-.0002	-.0005	-.0005
15	-.0001	.0000	.0002	.0001	-.0002	-.0003
16	.0000	.0000	.0001	.0002	.0000	-.0001
17	.0000	.0000	.0000	.0002	.0002	.0000
18	.0000	.0000	.0000	.0002	.0002	.0001

TABLE 30.- LOAD DISTRIBUTION DUE TO A UNIT PERTURBATION LOAD

$\left[B = 1{,}000;\ C = 2 \times 10^6;\ m = 36\right]$

(a) Concentrated perturbation load on stringer $j = 0$ at ring $i = 0$

j	Stringer load, p_{ij}, at station -						
	i = 0	i = 1	i = 2	i = 3	i = 4	i = 5	i = 6
0	0.5000	0.4011	0.3262	0.2692	0.2256	0.1919	0.1656
1	0	.0331	.0542	.0672	.0747	.0786	.0800
2	0	.0089	.0170	.0242	.0302	.0351	.0391
3	0	.0042	.0083	.0123	.0160	.0192	.0223
4	0	.0023	.0048	.0073	.0098	.0121	.0143
5	0	.0014	.0030	.0046	.0063	.0079	.0096
6	0	.0008	.0018	.0029	.0041	.0053	.0064
7	0	.0005	.0011	.0018	.0025	.0033	.0042
8	0	.0003	.0006	.0010	.0014	.0019	.0025
9	0	.0001	.0002	.0004	.0006	.0009	.0012
10	0	.0000	.0000	.0000	.0000	.0001	.0002
11	0	-.0001	-.0002	-.0003	-.0004	-.0005	-.0005
12	0	-.0002	-.0004	-.0006	-.0008	-.0010	-.0011
13	0	-.0002	-.0005	-.0007	-.0010	-.0012	-.0015
14	0	-.0003	-.0006	-.0009	-.0012	-.0015	-.0018
15	0	-.0003	-.0007	-.0010	-.0013	-.0017	-.0021
16	0	-.0004	-.0007	-.0011	-.0014	-.0018	-.0022
17	0	-.0004	-.0007	-.0011	-.0015	-.0018	-.0022
18	0	-.0004	-.0007	-.0011	-.0015	-.0019	-.0022

j	Shear flow, $q_{ij}L$, at station -					
	i = 0	i = 1	i = 2	i = 3	i = 4	i = 5
0	0.0495	0.0374	0.0285	0.0218	0.0168	0.0131
1	.0164	.0163	.0155	.0143	.0130	.0117
2	.0075	.0082	.0083	.0083	.0080	.0078
3	.0034	.0040	.0044	.0046	.0047	.0047
4	.0010	.0015	.0019	.0022	.0024	.0026
5	-.0004	-.0001	.0002	.0005	.0008	.0009
6	-.0012	-.0011	-.0009	-.0007	-.0004	-.0002
7	-.0017	-.0017	-.0016	-.0014	-.0012	-.0011
8	-.0019	-.0020	-.0020	-.0019	-.0018	-.0016
9	-.0020	-.0021	-.0021	-.0021	-.0020	-.0019
10	-.0020	-.0021	-.0021	-.0021	-.0021	-.0021
11	-.0019	-.0020	-.0020	-.0020	-.0021	-.0020
12	-.0018	-.0018	-.0018	-.0018	-.0019	-.0019
13	-.0015	-.0015	-.0015	-.0016	-.0016	-.0017
14	-.0012	-.0012	-.0012	-.0013	-.0013	-.0014
15	-.0009	-.0009	-.0009	-.0009	-.0010	-.0010
16	-.0006	-.0006	-.0006	-.0006	-.0006	-.0006
17	-.0002	-.0002	-.0002	-.0002	-.0002	-.0002

TABLE 30.- LOAD DISTRIBUTION DUE TO A UNIT PERTURBATION LOAD - Continued

$\left[B = 1{,}000;\ C = 2 \times 10^6;\ m = 36\right]$

(b) Distributed perturbation load on stringer $j = 0$ between rings $i = 0$ and $i = 1$

j	Stringer load, p_{ij}, at station -					
	i = 1	i = 2	i = 3	i = 4	i = 5	i = 6
0	0.4482	0.3619	0.2964	0.2464	0.2080	0.1782
1	.0177	.0444	.0612	.0713	.0769	.0795
2	.0045	.0130	.0207	.0273	.0327	.0372
3	.0021	.0063	.0103	.0141	.0177	.0208
4	.0011	.0036	.0061	.0086	.0109	.0132
5	.0007	.0022	.0038	.0055	.0071	.0088
6	.0004	.0013	.0024	.0035	.0047	.0059
7	.0002	.0008	.0014	.0021	.0029	.0038
8	.0001	.0004	.0008	.0012	.0017	.0022
9	.0001	.0002	.0003	.0005	.0007	.0010
10	.0000	.0000	.0000	.0000	.0001	.0002
11	.0000	-.0002	-.0003	-.0004	-.0005	-.0005
12	-.0001	-.0003	-.0005	-.0007	-.0008	-.0010
13	-.0001	-.0004	-.0006	-.0009	-.0012	-.0014
14	-.0001	-.0004	-.0007	-.0010	-.0013	-.0016
15	-.0002	-.0005	-.0008	-.0012	-.0015	-.0018
16	-.0002	-.0005	-.0009	-.0012	-.0016	-.0020
17	-.0002	-.0006	-.0009	-.0013	-.0016	-.0021
18	-.0002	-.0006	-.0009	-.0013	-.0018	-.0021

j	Shear flow, $q_{ij}L$, at station -					
	i = 0	i = 1	i = 2	i = 3	i = 4	i = 5
0	0.0518	0.0432	0.0327	0.0250	0.0192	0.0149
1	.0163	.0165	.0159	.0149	.0136	.0124
2	.0074	.0079	.0083	.0083	.0082	.0079
3	.0032	.0037	.0042	.0045	.0046	.0047
4	.0010	.0013	.0017	.0020	.0023	.0025
5	-.0004	-.0002	.0001	.0004	.0006	.0008
6	-.0012	-.0012	-.0010	-.0008	-.0006	-.0003
7	-.0016	-.0017	-.0016	-.0015	-.0013	-.0012
8	-.0019	-.0020	-.0020	-.0019	-.0018	-.0017
9	-.0020	-.0021	-.0021	-.0021	-.0020	-.0020
10	-.0020	-.0020	-.0021	-.0021	-.0022	-.0021
11	-.0019	-.0019	-.0020	-.0020	-.0020	-.0021
12	-.0018	-.0018	-.0018	-.0018	-.0019	-.0019
13	-.0015	-.0015	-.0015	-.0016	-.0016	-.0016
14	-.0012	-.0012	-.0012	-.0013	-.0013	-.0013
15	-.0009	-.0009	-.0009	-.0009	-.0010	-.0010
16	-.0005	-.0006	-.0006	-.0006	-.0005	-.0006
17	-.0002	-.0002	-.0002	-.0002	-.0002	-.0002

TABLE 30.- LOAD DISTRIBUTION DUE TO A UNIT PERTURBATION LOAD - Concluded

$$\left[B = 1{,}000;\ C = 2 \times 10^6;\ m = 36\right]$$

(c) Shear perturbation load about shear panel (0,0)

j	Stringer load, p_{ij}/L, at station -					
	i = 1	i = 2	i = 3	i = 4	i = 5	i = 6
1	-0.4189	-0.3132	-0.2326	-0.1732	-0.1295	-0.0975
2	.0149	-.0196	-.0331	-.0386	-.0400	-.0387
3	.0290	.0097	.0007	-.0047	-.0082	-.0106
4	.0237	.0147	.0086	.0046	.0016	-.0004
5	.0139	.0137	.0103	.0075	.0054	.0037
6	.0051	.0101	.0094	.0079	.0065	.0052
7	-.0004	.0058	.0071	.0069	.0062	.0055
8	-.0026	.0021	.0044	.0051	.0052	.0049
9	-.0026	-.0003	.0020	.0032	.0037	.0039
10	-.0016	-.0015	.0002	.0015	.0022	.0027
11	-.0006	-.0017	-.0009	.0001	.0010	.0015
12	.0000	-.0013	-.0013	-.0007	-.0001	.0005
13	.0003	-.0008	-.0012	-.0011	-.0007	-.0003
14	.0002	-.0003	-.0010	-.0011	-.0010	-.0007
15	.0001	.0000	-.0006	-.0010	-.0010	-.0009
16	.0000	.0001	-.0003	-.0007	-.0008	-.0008
17	.0000	.0001	-.0001	-.0004	-.0006	-.0005
18	.0000	.0000	.0000	-.0001	-.0001	-.0002

j	Shear flow, q_{ij}, at station -					
	i = 0	i = 1	i = 2	i = 3	i = 4	i = 5
0	0.3209	0.0572	0.0544	0.0436	0.0342	0.0267
1	.1586	-.0485	-.0263	-.0157	-.0094	-.0053
2	.1288	-.0140	-.0128	-.0102	-.0081	-.0066
3	.0709	.0053	-.0039	-.0048	-.0046	-.0042
4	.0234	.0144	.0023	-.0008	-.0017	-.0021
5	-.0044	.0145	.0057	.0020	.0004	-.0004
6	-.0145	.0095	.0064	.0035	.0018	.0009
7	-.0137	.0032	.0052	.0037	.0024	.0016
8	-.0085	-.0015	.0028	.0030	.0024	.0019
9	-.0034	-.0038	.0005	.0018	.0019	.0017
10	-.0001	-.0039	-.0012	.0005	.0011	.0013
11	.0011	-.0028	-.0019	-.0005	.0003	.0008
12	.0011	-.0015	-.0020	-.0011	-.0002	.0002
13	.0006	-.0004	-.0015	-.0012	-.0006	-.0002
14	.0001	.0002	-.0009	-.0011	-.0008	-.0005
15	-.0001	.0003	-.0004	-.0007	-.0007	-.0006
16	-.0002	.0003	.0001	-.0003	-.0006	-.0006
17	-.0001	.0002	.0003	.0001	-.0004	-.0007
18	-.0001	.0001	.0004	.0000	-.0004	-.0007

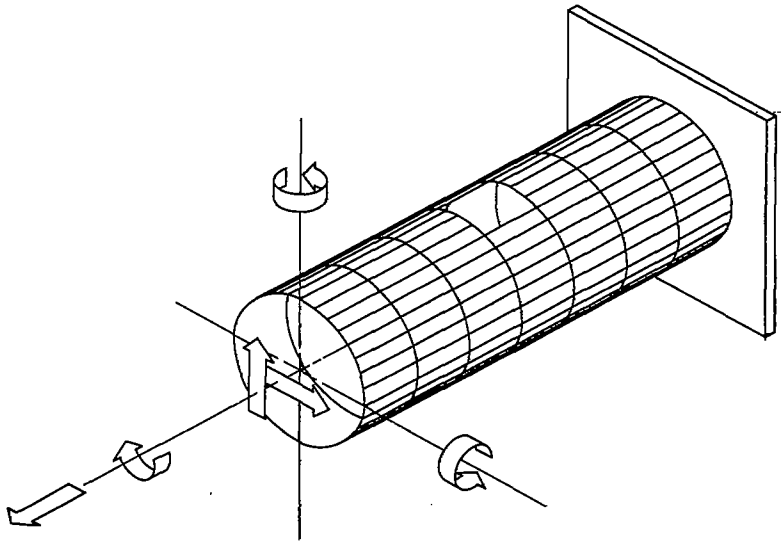

Figure 1.- Circular semimonocoque cylinder with cutout.

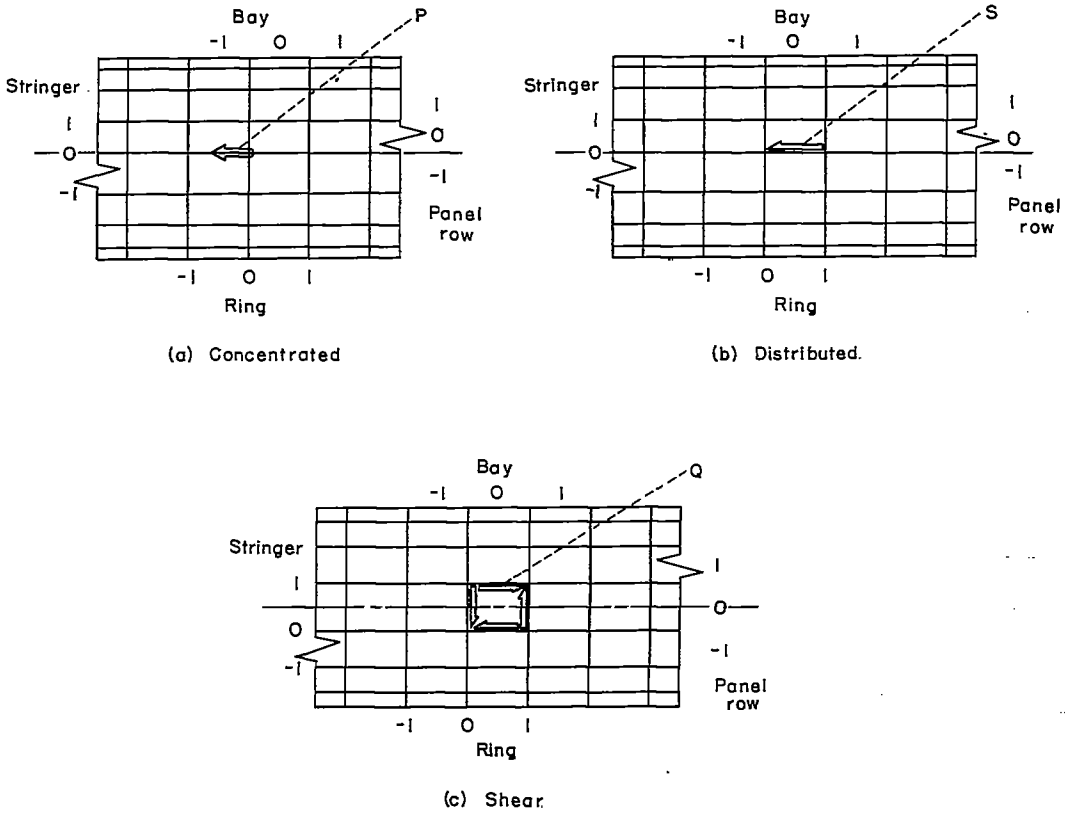

Figure 2.- Perturbation loads

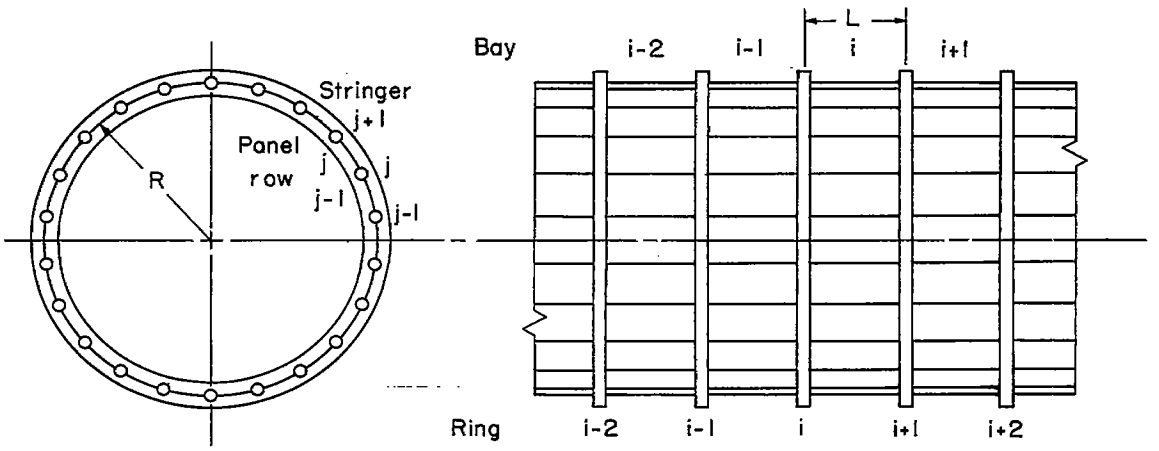

Figure 3.- Portion of typical cylinder.

NACA-Langley - 7-12-55 - 1000