REPORT 1275

THE PROPER COMBINATION OF LIFT LOADINGS FOR LEAST DRAG ON A SUPERSONIC WING[1]

By Frederick C. Grant

SUMMARY

Lagrange's method of undetermined multipliers is applied to the problem of properly combining lift loadings for the least drag at a given lift on supersonic wings. The method shows the interference drag between the optimum loading and any loading at the same lift coefficient to be constant. This is an integral form of the criterion established by Robert T. Jones for optimum loadings.

The best combination of four loadings on a delta wing with subsonic leading edges is calculated as a numerical example. The loadings considered have finite pressures everywhere on the plan form. Through the sweepback range the optimum combination of the four nonsingular loadings has about the same drag coefficient as a flat plate with leading-edge thrust.

INTRODUCTION

The problem of minimizing the supersonic drag for a given lift on a fixed plan form has been approached in different ways. Jones, in references 1 and 2, makes use of reverse-flow theorems to derive several simple properties of the optimum load distribution and to present as well the optimum distribution for elliptic plan forms. Graham, in reference 3, shows how the proper use of orthogonal loadings can reduce the drag at fixed lift. Orthogonal loadings are loadings of zero interference drag. The interference drag between two loadings is the total drag of each in the downwash field of the other. In reference 4, theorems concerning orthogonality and reverse flow are developed, whereas in references 5 and 6 numerical examples of drag reduction by use of orthogonal loadings are given. For delta wings with conical camber the optimum shapes are derived by Ritz's method in reference 7.

In this report Lagrange's method of undetermined multipliers is applied to the problem of properly combining loadings for the least drag at a given lift. By use of this method a simply expressed property of the optimum loading is found which is an integral form of a property established by Jones in reference 1 for reversible flows. Jones' property of the optimum loading is that the downwash on the plan form is constant in the combined forward- and reverse-flow fields. The best combination of four types of nonsingular loading on a delta wing is calculated as a numerical example of the use of the method.

[1] Supersedes NACA Technical Note 3533 by Frederick C. Grant, 1955.

SYMBOLS

A	loading strength parameter
b	span
c	local chord
C_D	drag coefficient
$C_{D,i}$	drag coefficient of ith loading
$C_{D,ij}$	drag coefficient of interference between ith and jth component loadings
C_L	lift coefficient
$C_{L,i}$	lift coefficient of ith loading
C_p	lifting pressure coefficient
M	Mach number
m	tangent of semiapex angle
N	number of loadings
$n=\beta m$	sweepback-speed parameter
R	functions of θ and n (see appendix)
S	wing area
X', Y'	arbitrary Cartesian coordinates
l	loading on an arbitrary line, $\int_\tau C_p\,dX'$
s, t	integers
x, y, z	Cartesian coordinates of lifting surface (see fig. 2)
α	local angle of attack of lifting surface
$\beta=\sqrt{M^2-1}$	
ϵ	small positive number
$\theta=\frac{y}{mx}$	
λ	Lagrange's multiplier
τ	plan form
$1-\mu$	root chord of arrow wing

Subscripts:

i, j	ith, jth loading component
M	minimum among all loadings
0	minimum among N loadings
X	arbitrary loading

ANALYSIS

THEORY

Consider a superposition of N loadings of the form

$$C_p=A_1C_{p,1}+A_2C_{p,2}+A_3C_{p,3}+\ .\ .\ .+A_NC_{p,N} \qquad (1)$$

where A is the strength parameter and C_p is the resultant lifting pressure coefficient at a point on the plan form. The corresponding local angle of attack may be written as

$$\alpha = A_1\alpha_1 + A_2\alpha_2 + A_3\alpha_3 + \ldots + A_N\alpha_N \tag{2}$$

The local drag coefficient $C_p\alpha$ is a quadratic in A which may be integrated over the plan form τ to give the drag coefficient of the wing. Thrust-loaded singularities at the leading edge are therefore excluded from the drag. This exclusion is merely for convenience and is not necessary. A formula for the drag coefficient is

$$C_D = \frac{1}{S}\int_\tau C_p\alpha\, dS = \frac{1}{2}\sum_{i=1}^{N}\sum_{j=1}^{N} C_{D,ij}A_iA_j \tag{3}$$

where

$$C_{D,ij} = C_{D,ji} = \frac{1}{S}\int_\tau (C_{p,i}\alpha_j + C_{p,j}\alpha_i)dS$$

The average lifting pressure coefficient on the plan form is the lift coefficient, which is

$$C_L = \frac{1}{S}\int_\tau C_p\, dS = \sum_{i=1}^{N} C_{L,i}A_i \tag{4}$$

The problem is to find the set of A's which yields the minimum value of C_D subject to the condition that C_L is constant. Because of the quadratic nature of C_D and the linear form of C_L, Lagrange's method of undetermined multipliers is particularly suitable for the solution as it leads to a set of linear algebraic equations.

As shown in reference 8, a function of the A coefficients $F = C_D + \lambda C_L$ is formed, where λ is Lagrange's multiplier. The minimum value of F as determined by the N linear algebraic equations $\frac{\partial F}{\partial A_i} = 0$ plus condition (4) is Lagrange's solution. In matrix form these equations are:

$$\begin{bmatrix} 2C_{D,1} & C_{D,12} & C_{D,13} & \ldots & C_{D,1N} & C_{L,1} \\ C_{D,12} & 2C_{D,2} & C_{D,23} & \ldots & C_{D,2N} & C_{L,2} \\ C_{D,13} & C_{D,23} & 2C_{D,3} & \ldots & C_{D,3N} & C_{L,3} \\ \vdots & \vdots & \vdots & \ldots & \vdots & \vdots \\ C_{D,1N} & C_{D,2N} & C_{D,3N} & \ldots & 2C_{D,N} & C_{L,N} \\ C_{L,1} & C_{L,2} & C_{L,3} & \ldots & C_{L,N} & 0 \end{bmatrix} \begin{bmatrix} A_1 \\ A_2 \\ A_3 \\ \vdots \\ A_N \\ \lambda \end{bmatrix} = \begin{bmatrix} 0 \\ 0 \\ 0 \\ \vdots \\ 0 \\ C_L \end{bmatrix} \tag{5}$$

The equations may be written more simply if first the interference drag between the optimum loading and the ith component of the loading is computed. From equations (1) and (2), the following expressions may be written:

$$\left.\begin{aligned} C_{p,0}\alpha_i &= A_1C_{p,1}\alpha_i + A_2C_{p,2}\alpha_i + A_3C_{p,3}\alpha_i + \ldots + \\ &\qquad A_iC_{p,i}\alpha_i + \ldots + A_NC_{p,N}\alpha_i \\ \alpha_0C_{p,i} &= A_1\alpha_1C_{p,i} + A_2\alpha_2C_{p,i} + A_3\alpha_3C_{p,i} + \ldots + \\ &\qquad A_i\alpha_iC_{p,i} + \ldots + A_N\alpha_NC_{p,i} \end{aligned}\right\} \tag{6}$$

Adding equations (6) and integrating over the plan form gives

$$\begin{aligned} C_{D,0i} &= \frac{1}{S}\int_\tau (C_{p,0}\alpha_i + \alpha_0C_{p,i})dS = A_1C_{D,1i} + A_2C_{D,2i} + \\ &\quad A_3C_{D,3i} + \ldots + 2A_iC_{D,i} + \ldots + A_NC_{D,Ni} \\ &= \sum_{j=1}^{N} A_jC_{D,ji} \end{aligned} \tag{7}$$

This expression for $C_{D,0i}$ is a part of the left-hand side of the ith equation of the linear set which is now written as

$$C_{D,0i} + \lambda C_{L,i} = 0 \tag{8}$$

A simple property of the optimum load distribution may now be derived. First $C_{D,0}$ is rewritten by use of equation (7):

$$C_{D,0} = \frac{1}{2}\sum_{i=1}^{N} A_iC_{D,0i} \tag{9}$$

or using equations (8) and (4)

$$C_{D,0} = -\frac{1}{2}\lambda C_L \tag{10}$$

Substituting equation (10) into equation (8) gives

$$C_{D,0i} = 2\frac{C_{D,0}}{C_L}C_{L,i} \tag{11}$$

Since equation (11) holds for any number of loadings, let the number of components increase without limit to include all possible loadings. For an arbitrary loading X and the absolute minimum M, equation (11) may be written as

$$C_{D,MX} = 2\frac{C_{D,M}}{C_L}C_{L,X} \tag{12}$$

The meaning of equation (12) may be simply expressed as follows: The interference drag between the optimum loading and any loading at the same lift coefficient is constant. If the reversibility theorem is applicable, equation (12) is an integral equivalent of a condition established by Jones in reference 1. Jones' condition states that for the optimum loading the downwash on the plan form is constant in the combined forward- and reverse-flow fields. Barred variables will represent the reverse flow which has the same lift loading on the plan form but, in general, a different surface shape. Then, by reversibility,

$$\int_\tau C_{p,M}\alpha_X\, dS=\int_\tau \overline{C}_{p,M}\alpha_X\, dS=\int_\tau \overline{\alpha}_M C_{p,X}\, dS \tag{13}$$

By definition, $C_{D,MX}$ is

$$C_{D,MX}=\frac{1}{S}\int_\tau (C_{p,M}\alpha_X+\alpha_M C_{p,X})dS$$

Therefore, equation (12) may be written as

$$\int_\tau C_{p,X}(\alpha_M+\overline{\alpha}_M)dS=2\frac{C_{D,M}}{C_L}\int_\tau C_{p,X}\, dS \tag{14}$$

Since $C_{p,X}$ is arbitrary, $\alpha_M+\overline{\alpha}_M$ must be constant. Hence,

$$\alpha_M+\overline{\alpha}_M=2\frac{C_{D,M}}{C_L} \tag{15}$$

This is the condition derived by Jones in reference 1. Equation (12) is then an equivalent integral form of this condition.

Equation (12) shows the orthogonality of the optimum loading to, and only to, zero lift loadings. This result, which was stated by Graham in reference 3, is seen to be a special case of a more general interference drag property given by equation (12).

COMPARISON WITH THE METHOD OF ORTHOGONAL LOADINGS

If two loadings are to be combined, it may be shown that Graham's method of orthogonal loadings (ref. 3) and the present method are equivalent. If the resultant combination of two loadings is combined by the method of reference 3 with a third loading, the lift ratio of the first two loadings is unchanged in the best combination of the three. If $n>2$ loadings are successively combined in the manner of reference 3, the first $n-1$ loadings are not allowed to adjust their relative strengths upon addition of the nth. In the present Lagrangian method every loading has equal freedom to adjust. For this reason, the Lagrangian method should be more rapidly convergent.

NUMERICAL EXAMPLE

Tucker in reference 9 presents formulas for the surface coordinates of delta and arrow wings which support four types of pressure distribution. The formulas are given for subsonic leading edges and supersonic trailing edges. In the notation of this report (fig. 1) a combination of the four loadings may be written:

$$C_p=A_1+A_2x+A_3\frac{|y|}{m}+A_4\frac{y^2}{m^2} \tag{16}$$

Formulas for the $C_{D,ij}$ quantities may be derived from equation (16) and the surface formulas given in reference 9, by integrations over the plan form. Details are given in the appendix.

The optimum-drag results are presented in figure 2 along with the corresponding drag values for a flat delta wing with and without leading-edge thrust (ref. 10). The drag values for the four component loadings taken alone are also shown. In addition, the drag of the conically cambered optimum delta wing (ref. 7) and Jones' absolute minimum for narrow wings (ref. 1) are plotted. The optimum A values are tabulated in the appendix.

Noteworthy in figure 2 is the closeness with which all the optimum drags agree with each other and with the drag of a flat delta wing which has a thrust-loaded leading edge. The close approach of the present optimum of four loadings to Jones' absolute minimum for narrow wings is also evident. The data indicate that the relatively low drag of the flat

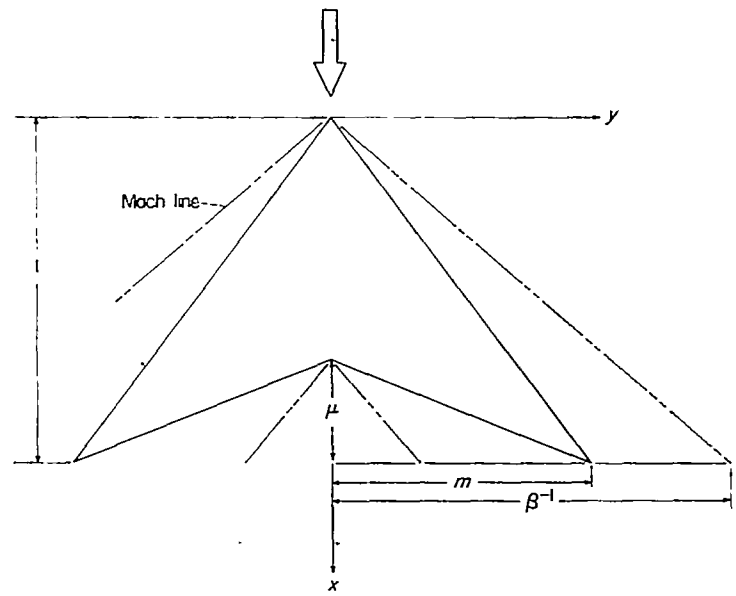

FIGURE 1.—Arrow plan form.

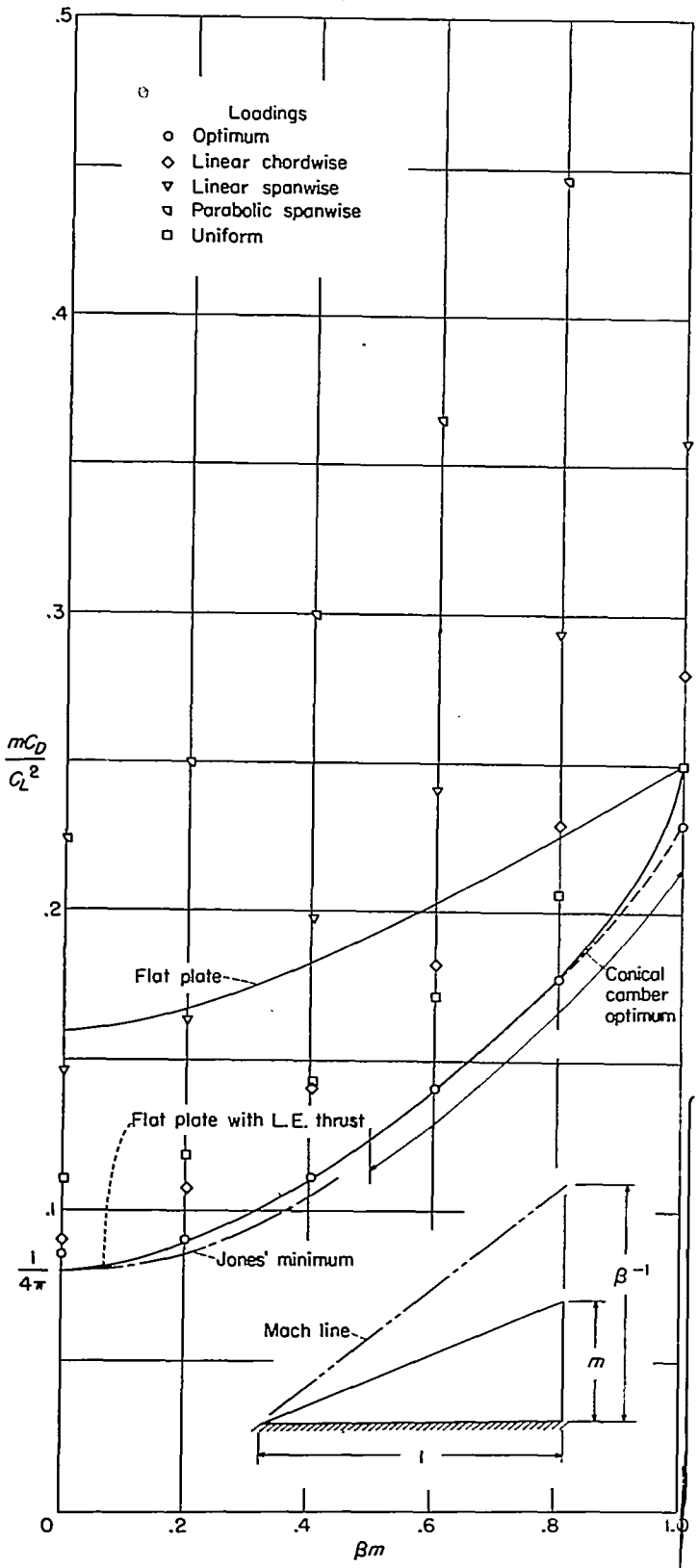

FIGURE 2.—Comparative drags on a delta plan form.

delta wing with leading-edge thrust can be equalled by properly combining a few loadings having finite pressures everywhere on the plan form. A plausible speculation suggested by the data is that it is possible to come very close to the minimum drag on a delta wing with but a few steps in a series approximation. Perhaps, too, a restricted minimum, such as the one for conical camber, gives a close approximation to the absolute minimum drag if the restriction is not too unnatural.

Since the vortex drag of a wing at any Mach number depends only on the spanwise loading, a departure from the elliptic spanwise loading is a measure of the vortex drag in excess of the least possible drag. In figure 3 the spanwise loading of the optimum combination is shown at the extremes of the sweepback range. There is good agreement with the elliptic loading especially for the case of extreme sweepback ($n=0$). Because for extreme sweepback the wave drag vanishes, a direct comparison of the vortex drag of the optimum combination and the elliptic spanwise loading is given by figure 2 at $n=0$. The elliptic spanwise loading has the drag parameter value $\frac{1}{4\pi}$.

It is shown in reference 2 that the wave drag due to lift depends on all the lift loadings $l(Y')$ where $l=\int_\tau C_p\, dX'$ and X' is an arbitrary direction inclined to the free stream at more than the Mach angle. The coordinate Y' is perpendicular to X'. A sufficient condition for minimum wave drag is shown to be that $l(Y')$ is an ellipse. In figure 4 the loading of lines perpendicular to the free stream, or chordwise loading, is shown for the optimum combination with a sonic leading edge ($n=1$). Agreement with the elliptical loading is poor. For the case of extreme sweepback ($n=0$) no chordwise loading for the optimum combination is shown in figure 4 because it is partially arbitrary. (See appendix.) The allowable variations of the optimum loading at $n=0$ correspond to changes in the oblique loadings that do not change the spanwise loading. This result emphasizes the vanishing of the wave drag with extreme sweepback.

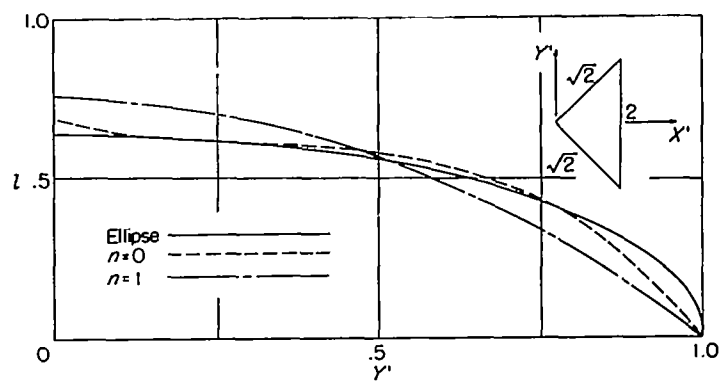

FIGURE 3.—The loading of lines parallel to the free stream for the optimum combination. $m=C_L=1$.

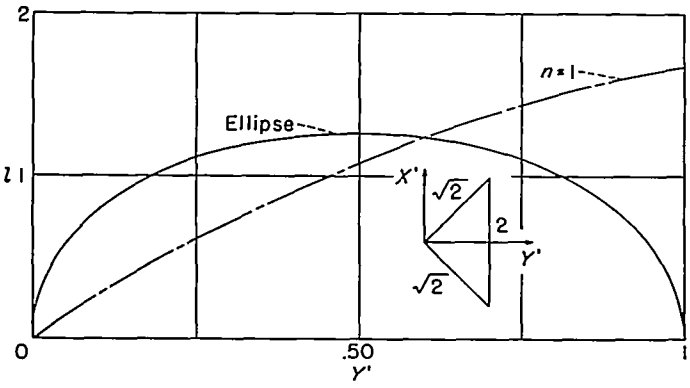

FIGURE 4.—The loading of lines perpendicular to the free stream for the optimum combination. $m=C_L=1$.

CONCLUDING REMARKS

Lagrange's method of undetermined multipliers is applied to the problem of properly combining lift loadings for the least drag at a given lift on supersonic wings.

The method shows the interference drag between the optimum loading and any loading at the same lift coefficient to be constant. This is an integral form of the criterion established by Robert T. Jones for optimum loadings.

The best combination of four loadings on a delta wing with subsonic leading edges is calculated as a numerical example. The loadings considered have finite pressures everywhere on the plan form. At each Mach number the optimum combination of these four nonsingular loadings has nearly the same drag coefficient as a flat plate with leading-edge thrust.

LANGLEY AERONAUTICAL LABORATORY,
NATIONAL ADVISORY COMMITTEE FOR AERONAUTICS,
LANGLEY FIELD, VA., *July 27, 1955.*

APPENDIX

DETAILS OF NUMERICAL EXAMPLE

INTERFERENCE DRAG FORMULAS

Inasmuch as the pressure coefficient C_p and corresponding angle of attack α are given by

$$\left.\begin{aligned} C_p&=A_1+A_2x+A_3\frac{|y|}{m}+A_4\frac{y^2}{m^2}\\ \alpha&=A_1\alpha_1+A_2\alpha_2+A_3\alpha_3+A_4\alpha_4\end{aligned}\right\} \tag{A1}$$

then the local drag coefficient may be written as

$$\begin{aligned} C_p\alpha=&A_1^2(\alpha_1)+A_1A_2(x\alpha_1+\alpha_2)+A_1A_3\left(\frac{|y|}{m}\alpha_1+\alpha_3\right)+\\ &A_1A_4\left(\frac{y^2}{m^2}\alpha_1+\alpha_4\right)+A_2^2(x\alpha_2)+A_2A_3\left(\frac{|y|}{m}\alpha_2+x\alpha_3\right)+\\ &A_2A_4\left(\frac{y^2}{m^2}\alpha_2+x\alpha_4\right)+A_3^2\left(\frac{|y|}{m}\alpha_3\right)+\\ &A_3A_4\left(\frac{y^2}{m^2}\alpha_3+\frac{|y|}{m}\alpha_4\right)+A_4^2\left(\frac{y^2}{m^2}\alpha_4\right)\end{aligned} \tag{A2}$$

The required $C_{D,ij}$ functions are the averages over the plan form (fig. 1) of the quantities in parentheses in equation (A2). Rather than α_i itself, reference 9 gives the surface ordinate z_i which is the chordwise integrated value of α_i:

$$z_i=-\int\alpha_i\,dx \tag{A3}$$

The values given for z_i are

$$\left.\begin{aligned} z_1&=\frac{x}{m}R_1\\ z_2&=\frac{x^2}{m}R_2\\ z_3&=\frac{x^2}{m}R_3\\ z_4&=\frac{x^3}{m}R_4\end{aligned}\right\} \tag{A4}$$

The values of R_i are functions of $\theta=\frac{y}{mx}$ tabulated in reference 9 for different values of n. The equations for R_i are

$$\begin{aligned} R_1=\frac{1}{4\pi}\Bigg[&2\sqrt{1-n^2\theta^2}-2\cosh^{-1}\left|\frac{1}{n\theta}\right|+\\ &\sqrt{1-n^2}(1+\theta)\cosh^{-1}\left|\frac{1+n^2\theta}{n(1+\theta)}\right|+\\ &\sqrt{1-n^2}(1-\theta)\cosh^{-1}\left|\frac{1-n^2\theta}{n(1-\theta)}\right|\Bigg]\end{aligned} \tag{A5a}$$

$$\begin{aligned} R_2=-\frac{1}{4\pi}\Bigg\{&\sqrt{1-n^2\theta^2}-2\theta^2\cosh^{-1}\left|\frac{1}{n\theta}\right|+\\ &\frac{1}{\sqrt{1-n^2}}\left[\frac{n^2(1-\theta^2)}{2}+\theta+\theta^2\right]\cosh^{-1}\left|\frac{1+n^2\theta}{n(1+\theta)}\right|+\\ &\frac{1}{\sqrt{1-n^2}}\left[\frac{n^2(1-\theta^2)}{2}-\theta+\theta^2\right]\cosh^{-1}\left|\frac{1-n^2\theta}{n(1-\theta)}\right|\Bigg\}\end{aligned} \tag{A5b}$$

$$\begin{aligned} R_3=-\frac{1}{4\pi}\Bigg[&\frac{5}{2}\sqrt{1-n^2\theta^2}-\left(1+3\theta^2-\frac{1}{2}n^2\theta^2\right)\cosh^{-1}\left|\frac{1}{n\theta}\right|+\\ &\frac{(1+\theta)^2+2(1-n^2)(\theta+\theta^2)}{2\sqrt{1-n^2}}\cosh^{-1}\left|\frac{1+n^2\theta}{n(1+\theta)}\right|+\\ &\frac{(1-\theta)^2-2(1-n^2)(\theta-\theta^2)}{2\sqrt{1-n^2}}\cosh^{-1}\left|\frac{1-n^2\theta}{n(1-\theta)}\right|\Bigg]\end{aligned} \tag{A5c}$$

$$\begin{aligned} R_4=\frac{1}{4\pi}\Bigg\{&\frac{(1-n^2\theta^2)^{3/2}}{3(1-n^2)}+\frac{12-10n^2}{3n^2(1-n^2)}n^2\theta^2\sqrt{1-n^2\theta^2}-6\theta^2\cosh^{-1}\left|\frac{1}{n\theta}\right|+\\ &\frac{1}{(1-n^2)^{3/2}}\Bigg[\frac{6-9n^2+2n^4}{2}(\theta^2+\theta^3)+\frac{2-3n^2}{2}(\theta-\theta^3)-\\ &\frac{n^2}{6}(1+\theta^3)\Bigg]\cosh^{-1}\left|\frac{1+n^2\theta}{n(1+\theta)}\right|+\frac{1}{(1-n^2)^{3/2}}\Bigg[\frac{6-9n^2+2n^4}{2}(\theta^2-\theta^3)-\\ &\frac{2-3n^2}{2}(\theta-\theta^3)-\frac{n^2}{6}(1-\theta^3)\Bigg]\cosh^{-1}\left|\frac{1-n^2\theta}{n(1-\theta)}\right|\Bigg\}\end{aligned} \tag{A5d}$$

For terms in equation (A2) of the type $(y/m)^s\alpha_t$, a spanwise integration of z_t gives the following average on the plan form:

$$\begin{aligned}\frac{1}{S}\int_\tau\left(\frac{y}{m}\right)^s\alpha_t\,dS=&\frac{2}{1-\mu}\frac{1}{m}\Bigg[\frac{R_t(1)}{s+t+1}-\\ &(1-\mu)^{s+t+1}\int_0^1\frac{\theta^sR_t(\theta)}{(1-\mu\theta)^{s+t+2}}d\theta\Bigg]\end{aligned} \tag{A6}$$

For terms of the type $x\alpha_t$ an additional integration by parts in the x direction is required to maintain the R_t functions intact under the integral signs. The result for this case is

$$\begin{aligned}\frac{1}{S}\int_\tau x\alpha_t\,dS=&\frac{2}{1-\mu}\frac{1}{m}\Bigg[\frac{R_t(1)}{t+2}-(1-\mu)^{t+2}\int_0^1\frac{R_t(\theta)}{(1-\mu\theta)^{t+3}}d\theta+\\ &\frac{(1-\mu)^{t+2}}{t+2}\int_0^1\frac{R_t(\theta)}{(1-\mu\theta)^{t+2}}d\theta\Bigg]\end{aligned} \tag{A7}$$

In formulas (A6) and (A7) the value of t for each i is as follows:

i	t
1	1
2	2
3	2
4	3

By applying formulas (A6) and (A7) to the integration of (A2), the following equations for $C_{D,ij}$ are derived:

$$2mC_{D,1}=\frac{2}{1-\mu}R_1(1)-4(1-\mu)\int_0^1\frac{R_1(\theta)}{(1-\mu\theta)^3}d\theta \tag{A8a}$$

$$mC_{D,12}=\frac{2}{3(1-\mu)}[R_1(1)+R_2(1)]+\frac{2(1-\mu)^2}{3}\int_0^1\frac{R_1(\theta)}{(1-\mu\theta)^3}d\theta-$$
$$2(1-\mu)^2\int_0^1\frac{R_1(\theta)}{(1-\mu\theta)^4}d\theta-2(1-\mu)^2\int_0^1\frac{R_2(\theta)}{(1-\mu\theta)^4}d\theta \tag{A8b}$$

$$mC_{D,13}=\frac{2}{3(1-\mu)}[R_1(1)+R_3(1)]-2(1-\mu)^2\int_0^1\frac{\theta R_1(\theta)}{(1-\mu\theta)^4}d\theta-$$
$$2(1-\mu)^2\int_0^1\frac{R_3(\theta)}{(1-\mu\theta)^4}d\theta \tag{A8c}$$

$$mC_{D,14}=\frac{1}{2(1-\mu)}[R_1(1)+R_4(1)]-2(1-\mu)^3\int_0^1\frac{\theta^2R_1(\theta)}{(1-\mu\theta)^5}d\theta-$$
$$2(1-\mu)^3\int_0^1\frac{R_4(\theta)}{(1-\mu\theta)^5}d\theta \tag{A8d}$$

$$2mC_{D,2}=\frac{R_2(1)}{1-\mu}-4(1-\mu)^3\int_0^1\frac{R_2(\theta)}{(1-\mu\theta)^5}d\theta+(1-\mu)^3\int_0^1\frac{R_2(\theta)}{(1-\mu\theta)^4}d\theta \tag{A8e}$$

$$mC_{D,23}=\frac{1}{2(1-\mu)}[R_2(1)+R_3(1)]-2(1-\mu)^3\int_0^1\frac{\theta R_2(\theta)}{(1-\mu\theta)^5}d\theta-$$
$$2(1-\mu)^3\int_0^1\frac{R_3(\theta)}{(1-\mu\theta)^5}d\theta+\frac{1}{2}(1-\mu)^3\int_0^1\frac{R_3(\theta)}{(1-\mu\theta)^4}d\theta \tag{A8f}$$

$$mC_{D,24}=\frac{2}{5(1-\mu)}[R_2(1)+R_4(1)]-2(1-\mu)^4\int_0^1\frac{\theta^2R_2(\theta)}{(1-\mu\theta)^6}d\theta-$$
$$2(1-\mu)^4\int_0^1\frac{R_4(\theta)}{(1-\mu\theta)^6}d\theta+\frac{2}{5}(1-\mu)^4\int_0^1\frac{R_4(\theta)}{(1-\mu\theta)^5}d\theta \tag{A8g}$$

$$2mC_{D,3}=\frac{R_3(1)}{1-\mu}-4(1-\mu)^3\int_0^1\frac{\theta R_3(\theta)}{(1-\mu\theta)^5}d\theta \tag{A8h}$$

$$mC_{D,34}=\frac{2}{5(1-\mu)}[R_3(1)+R_4(1)]-2(1-\mu)^4\int_0^1\frac{\theta^2R_3(\theta)}{(1-\mu\theta)^6}d\theta-$$
$$2(1-\mu)^4\int_0^1\frac{\theta R_4(\theta)}{(1-\mu\theta)^6}d\theta \tag{A8i}$$

$$2mC_{D,4}=\frac{2}{3(1-\mu)}R_4(1)-4(1-\mu)^5\int_0^1\frac{\theta^2R_4(\theta)}{(1-\mu\theta)^7}d\theta \tag{A8j}$$

The required $C_{L,i}$ functions are simple integrals over the plan form which yield

$$\left.\begin{aligned}C_{L,1}&=1\\C_{L,2}&=\frac{2-\mu}{3}\\C_{L,3}&=\frac{1}{3}\\C_{L,4}&=\frac{1}{6}\end{aligned}\right\} \tag{A9}$$

NUMERICAL CALCULATIONS

The integrals in equations (A8) were, in general, evaluated numerically. However, several of the integrands in equations (A8) have the form $\frac{R_1(\theta)}{(1-\mu\theta)^t}$ and $\frac{R_3(\theta)}{(1-\mu\theta)^t}$. These functions have an infinite discontinuity at $\theta=0$. For such a discontinuity, numerical methods break down. Near zero the following approximation is integrated analytically:

$$\left.\begin{aligned}R_1(\theta)&\approx R_1(\epsilon)+\frac{1}{2\pi}\cosh^{-1}\frac{1}{n\epsilon}-\frac{1}{2\pi}\cosh^{-1}\frac{1}{n\theta}\\R_3(\theta)&\approx R_3(\epsilon)-\frac{1}{4\pi}\cosh^{-1}\frac{1}{n\epsilon}+\frac{1}{4\pi}\cosh^{-1}\frac{1}{n\theta}\end{aligned}\right\}0<\theta\leqq\epsilon\ll1 \tag{A10}$$

The integrals for the region $0\leqq\theta\leqq\epsilon$ can then be approximated:

$$\left.\begin{aligned}\int_0^\epsilon\frac{R_1(\theta)}{(1-\mu\theta)^t}d\theta&\approx f(\epsilon)\left[R_1(\epsilon)+\frac{1}{2\pi}\cosh^{-1}\frac{1}{n\epsilon}\right]-\frac{I(\epsilon)}{2\pi}\\\int_0^\epsilon\frac{R_3(\theta)}{(1-\mu\theta)^t}d\theta&\approx f(\epsilon)\left[R_3(\epsilon)-\frac{1}{4\pi}\cosh^{-1}\frac{1}{n\epsilon}\right]+\frac{I(\epsilon)}{4\pi}\end{aligned}\right\} \tag{A11}$$

where

$$f(\epsilon)=\int_0^\epsilon\frac{d\theta}{(1-\mu\theta)^t}=\epsilon\left[1+\frac{t}{1}\mu\frac{\epsilon}{2}+\frac{t(t+1)}{2!}\frac{\overline{\mu\epsilon}^2}{3}+\frac{t(t+1)(t+2)}{3!}\frac{\overline{\mu\epsilon}^3}{4}+\ldots\right] \tag{A12}$$

and

$$I(\epsilon)=\int_0^\epsilon\frac{\cosh^{-1}\frac{1}{n\theta}}{(1-\mu\theta)^t}d\theta \tag{A13}$$

The integral in equation (A13) may be evaluated by expanding the denominator by the binomial theorem and writing $I(\epsilon)$ as an infinite series

$$I(\epsilon)=a_0i_0+a_1i_1+a_2i_2+a_3i_3+\ \ldots \tag{A14}$$

where

$$a_0=1 \tag{A15a}$$

$$a_1=\frac{t}{1}\mu \tag{A15b}$$

$$a_2=\frac{t(t+1)}{2!}\mu^2 \tag{A15c}$$

$$a_3=\frac{t(t+1)(t+2)}{3!}\mu^3 \tag{A15d}$$

$$a_s=\frac{t(t+1)\ldots(t+s-1)}{s!}\mu^s \tag{A15e}$$

$$i_0=\int_0^\epsilon \cosh^{-1}\frac{1}{n\theta}\,d\theta \tag{A15f}$$

$$i_1=\int_0^\epsilon \theta\cosh^{-1}\frac{1}{n\theta}\,d\theta \tag{A15g}$$

$$i_2=\int_0^\epsilon \theta^2\cosh^{-1}\frac{1}{n\theta}\,d\theta \tag{A15h}$$

$$i_s=\int_0^\epsilon \theta^s\cosh^{-1}\frac{1}{n\theta}\,d\theta \tag{A15i}$$

The i_s integrals of equations (A15) are evaluated by use of the relation

$$\int\theta^s\cosh^{-1}\frac{1}{n\theta}\,d\theta=\frac{\theta^{s+1}}{s+1}\cosh^{-1}\frac{1}{n\theta}+\frac{1}{s+1}\int\frac{\theta^s}{\sqrt{1-n^2\theta^2}}\,d\theta \tag{A16}$$

EXACT CALCULATIONS

At the extremes of the sweepback range, equations (A8) may be evaluated exactly. For the case of extreme sweepback ($n=0$), there results:

$$R_1=\frac{1}{4\pi}\left(2+\log_e\frac{\theta^2}{1-\theta^2}+\theta\log_e\frac{1-\theta}{1+\theta}\right) \tag{A17a}$$

$$R_2=-\frac{1}{4\pi}\left(1+\theta\log_e\frac{1-\theta}{1+\theta}+\theta^2\log_e\frac{\theta^2}{1-\theta^2}\right) \tag{A17b}$$

$$R_3=-\frac{1}{4\pi}\left[\frac{5}{2}+(1+3\theta^2)\log_e\frac{\theta}{\sqrt{1-\theta^2}}+2\theta\log_e\frac{1-\theta}{1+\theta}\right] \tag{A17c}$$

$$R_4=\frac{1}{4\pi}\left[\frac{1}{3}+4\theta^2+(\theta+2\theta^3)\log_e\frac{1-\theta}{1+\theta}+3\theta^2\log_e\frac{\theta^2}{1-\theta^2}\right] \tag{A17d}$$

$$2mC_{D,1}=\frac{\log_e 2}{\pi} \tag{A18a}$$

$$mC_{D,12}=\frac{\frac{2}{3}+\frac{4}{3}\log_e 2}{4\pi} \tag{A18b}$$

$$mC_{D,13}=\frac{\frac{4}{3}-\frac{4}{3}\log_e 2}{4\pi} \tag{A18c}$$

$$mC_{D,14}=\frac{\frac{4}{3}\log_e 2-\frac{5}{6}}{4\pi} \tag{A18d}$$

$$2mC_{D,2}=\frac{1}{4\pi} \tag{A18e}$$

$$mC_{D,23}=\frac{\frac{4}{3}-\frac{4}{3}\log_e 2}{4\pi} \tag{A18f}$$

$$mC_{D,24}=\frac{\frac{4}{5}\log_e 2-\frac{2}{5}}{4\pi} \tag{A18g}$$

$$2mC_{D,3}=\frac{\frac{4}{3}-\frac{4}{3}\log_e 2}{4\pi} \tag{A18h}$$

$$mC_{D,34}=\frac{\frac{1}{30}+\frac{4}{15}\log_e 2}{4\pi} \tag{A18i}$$

$$2mC_{D,4}=\frac{\frac{4}{5}\log_e 2-\frac{2}{5}}{4\pi} \tag{A18j}$$

Equations (18) provide the interference drag coefficients required to calculate the vortex drag due to any combination of A values.

In the solution for the optimum A values, the parameters A_1, A_2, and A_3 are found to be linearly related and one of them may therefore be chosen arbitrarily. Choosing A_1 yields:

$$A_1=A_1 \tag{A19a}$$

$$A_2=\frac{3(4a-1)}{1+a}-2A_1 \tag{A19b}$$

$$A_3=A_1-\frac{3(38a-26a^2-11)}{(2-3a)(1+a)} \tag{A19c}$$

$$A_4=\frac{30(3a-a^2-1)}{(2-3a)(1+a)} \tag{A19d}$$

$$C_{D,0}=\frac{9}{8\pi}\frac{(4a-1)(3-2a)(1-2a)}{(2-3a)(1+a)} \tag{A19e}$$

where

$$a=\frac{4}{3}(1-\log_e 2)$$

The spanwise loading may be written as

$$l(y)=\left[\left(A_1+\frac{A_2}{2}\right)+y\left(\frac{A_2}{2}+A_3\right)+y^2(A_4)\right](1-y)\quad y>0 \tag{A20}$$

when $m=C_L=1$. Substitution of the A values given in equations (A19) shows that $l(y)$ is independent of the variations in A_1, A_2, and A_3.

For the case of a sonic leading edge ($n=1$),

$$R_1=\frac{1}{4\pi}\left(2\sqrt{1-\theta^2}-2\cosh^{-1}\frac{1}{\theta}\right) \tag{A21a}$$

$$R_2=-\frac{1}{4\pi}\left(2\sqrt{1-\theta^2}-2\theta^2\cosh^{-1}\frac{1}{\theta}\right) \tag{A21b}$$

$$R_3=-\frac{1}{4\pi}\left(\frac{7}{2}\sqrt{1-\theta^2}-\left(1+\frac{5}{2}\theta^2\right)\cosh^{-1}\frac{1}{\theta}\right] \tag{A21c}$$

$$R_4=\frac{1}{4\pi}\left[\left(\frac{2}{9}+\frac{52}{9}\theta^2\right)\sqrt{1-\theta^2}-6\theta^2\cosh^{-1}\frac{1}{\theta}\right] \tag{A21d}$$

$$2mC_{D,1}=\frac{1}{2} \tag{A22a}$$

$$mC_{D,12}=\frac{1}{3} \tag{A22b}$$

$$mC_{D,13}=\frac{1}{6\pi}+\frac{1}{12} \tag{A22c}$$

$$mC_{D,14}=\frac{1}{16} \tag{A22d}$$

$$2mC_{D,2}=\frac{1}{4} \tag{A22e}$$

$$mC_{D,23}=\frac{1}{6\pi}+\frac{1}{16} \tag{A22f}$$

$$mC_{D,24}=\frac{7}{120} \tag{A22g}$$

$$2mC_{D,3}=\frac{1}{4\pi} \tag{A22h}$$

$$mC_{D,34}=\frac{1}{48}+\frac{7}{90\pi} \tag{A22i}$$

$$2mC_{D,4}=\frac{11}{360} \tag{A22j}$$

CALCULATED VALUES OF A

The table that follows contains the calculated values of A for the optimum combination through the sweepback range. Four significant figures are given, since the tabulated values of R have four decimals. Values of $C_{D,0}$ for $m=C_L=1$ are also shown:

n	A_1	A_2	A_3	A_4	$C_{D,0}$
0	------	------	------	1.654	0.0830
.2	1.993	−2.586	1.435	1.517	.0899
.4	1.977	−2.571	1.590	1.244	.1105
.6	1.781	−2.147	1.472	.9568	.1398
.8	1.641	−1.818	1.364	.6957	.1766
1.0	1.357	−1.201	1.259	.1406	.2295

REFERENCES

1. Jones, Robert T.: The Minimum Drag of Thin Wings in Frictionless Flow. Jour. Aero. Sci., vol. 18, no. 2, Feb. 1951, pp. 75–81.
2. Jones, Robert T.: Theoretical Determination of the Minimum Drag of Airfoils at Supersonic Speeds. Jour. Aero. Sci., vol. 19, no. 12, Dec. 1952, pp. 813–822.
3. Graham, E. W.: A Drag Reduction Method for Wings of Fixed Plan Form. Jour. Aero. Sci., vol. 19, no. 12, Dec. 1952, pp. 823–825.
4. Rodriguez, A. M., Lagerstrom, P. A., and Graham, E. W.: Theorems Concerning the Drag Reduction of Wings of Fixed Plan Form. Jour. Aero. Sci., vol. 21, no. 1, Jan. 1954, pp. 1–7.
5. Walker, Kelsey, Jr.: Examples of Drag Reduction for Rectangular Wings. Rep. No. SM–14446, Douglas Aircraft Co., Inc., Jan. 15, 1953.
6. Beane, Beverly: Examples of Drag Reduction for Delta Wings. Rep. No. SM–14447, Douglas Aircraft Co., Inc., Jan. 12, 1953.
7. Tsien, S. H.: The Supersonic Conical Wing of Minimum Drag. Ph. D. Thesis, Cornell Univ., June 1953.
8. Courant, R.: Differential and Integral Calculus. Vol. II. Interscience Publishers, Inc. (New York), 1952, pp. 183–199.
9. Tucker, Warren A.: A Method for the Design of Sweptback Wings Warped To Produce Specified Flight Characteristics at Supersonic Speeds. NACA Rep. 1226, 1955. (Supersedes NACA RM L51F08, 1951.)
10. Brown, Clinton E.: Theoretical Lift and Drag of Thin Triangular Wings at Supersonic Speeds. NACA Rep. 839, 1946. (Supersedes NACA TN 1183.)