UNCLASSIFIED
CONFIDENTIAL
3 1176 00084 3806

Copy 6

RM A56E22

C2

NACA RM A56E22

RESEARCH MEMORANDUM

WIND-TUNNEL INVESTIGATION AT MACH NUMBERS FROM 0.8 TO 1.4 OF STATIC LONGITUDINAL AND LATERAL-DIRECTIONAL CHARACTERISTICS OF AN UNSWEPT-WING AIRPLANE MODEL

By James L. Summers, Stuart L. Treon, and Lawrence A. Graham

Ames Aeronautical Laboratory
Moffett Field, Calif.

CLASSIFICATION CHANGED
To UNCLASSIFIED
By authority of TPA #33 Date 10-28-60 ERG

LIBRARY COPY
DEC 18 1956
LANGLEY AERONAUTICAL LABORATOR
LIBRARY NACA
LANGLEY FIELD, VIRGINIA

CLASSIFIED DOCUMENT

This material contains information affecting the National Defense of the United States within the meaning of the espionage laws, Title 18, U.S.C., Secs. 793 and 794, the transmission or revelation of which in any manner to an unauthorized person is prohibited by law.

NATIONAL ADVISORY COMMITTEE FOR AERONAUTICS

WASHINGTON

December 13, 1956

CONFIDENTIAL
UNCLASSIFIED

 [redacted] UNCLASSIFIED

NATIONAL ADVISORY COMMITTEE FOR AERONAUTICS

RESEARCH MEMORANDUM

WIND-TUNNEL INVESTIGATION AT MACH NUMBERS FROM 0.8 TO 1.4 OF STATIC LONGITUDINAL AND LATERAL-DIRECTIONAL CHARACTERISTICS OF AN UNSWEPT-WING AIRPLANE MODEL

By James L. Summers, Stuart L. Treon,
and Lawrence A. Graham

SUMMARY

Results are presented for a wind-tunnel investigation of an airplane model with a 3.4-percent-thick unswept wing of aspect ratio 2.45 at Mach numbers from 0.8 to 1.4 at a Reynolds number of 1.5 million. Longitudinal characteristics are presented for the basic model and for configuration variations involving two types of wing camber, an area-rule fuselage modification, various external-store arrangements, several conventional missile installations and one designed according to the moment-of-area concept, and two fuselage dive-flap arrangements. Lateral-directional characteristics of the basic model with and without the empennage are also included.

Evident for the basic model were a tail-on pitch-up tendency at Mach numbers of 0.8 and 0.85 beginning at a lift coefficient of 0.7, and an abrupt fore-and-aft center-of-lift travel at transonic Mach numbers near the zero-lift condition. The configurations having the NACA modified-mean-line cambered wing, as compared with the configurations having the leading-edge-flap cambered wing, had (1) higher minimum drag coefficients, (2) lower drag due to lift, (3) higher values of maximum lift-drag ratio particularly at subsonic Mach numbers, and (4) less center-of-lift travel near the zero-lift condition at transonic Mach numbers. Modification of the fuselage according to an area-rule application resulted in a reduction in minimum drag coefficient and an increase in maximum lift-drag ratio at Mach numbers from 0.95 to 1.40. Results of mounting various external stores on the wing tips rather than under the wings or on the fuselage were (1) generally lower values of minimum drag at subsonic and supersonic Mach numbers, (2) an increase in lift-curve slope, and (3) a reduction of center-of-lift travel near zero lift coefficient at transonic Mach numbers. The configuration having the four-missile installation designed according to the moment-of-area rule had lower minimum drag coefficients

[redacted] UNCLASSIFIED

and lower maximum lift-drag ratios at transonic and supersonic Mach numbers than did the comparable conventional wing-tip installation. The increment in minimum drag coefficient for the configuration having two side-mounted fuselage flaps was only about 10 percent greater than that for the configuration having a single underfuselage mounted flap with half the frontal area of the side-mounted flaps. The variations with Mach number of the lift-curve slope and pitching-moment-curve slope, furthermore, were generally more favorable for the underfuselage flap configuration. The complete basic model had favorable lateral-directional characteristics, in general, within the test limits of angle-of-attack, sideslip angle, and Mach number ranges.

INTRODUCTION

Investigations of the aerodynamic characteristics of generalized aircraft configurations have indicated that the aircraft with a thin, low-aspect-ratio, unswept wing is one of several types suitable for use as a supersonic interceptor or fighter. The purpose of this report is to present information obtained from an investigation in the Ames 2- by 2-foot transonic wind tunnel of a model representative of contemporary high-speed fighter design. The Mach number range was from 0.8 to 1.4 and the Reynolds number was 1.5 million. The basic model consisted of a fuselage with canopy and faired side inlets, a 3.4-percent-thick unswept wing of aspect ratio 2.45, and a fixed, horizontal tail located high on the vertical stabilizer. Variations in the configuration geometry included: (1) two types of cambered wings; (2) a fuselage contour modification according to the area-rule method of reference 1; (3) several conventional missile and external-store installations; (4) a missile installation designed according to the moment-of-area method of references 2 and 3; and (5) two dive-flap arrangements. Static lateral-directional characteristics of only the basic model with and without the empennage were obtained throughout a range of sideslip angles at three angles of attack.

DATA NOTATION

a	wing section mean line designation
C_C	crosswind force coefficient
C_{C_β}	crosswind-force-curve slope
C_D	drag coefficient

$C_{D_{min}}$	minimum-drag coefficient
C_l	rolling-moment coefficient
C_{l_β}	rolling-moment-curve slope
C_L	lift coefficient
C_{L_α}	lift-curve slope
C_m	pitching-moment coefficient
C_n	yawing-moment coefficient
C_{n_β}	yawing-moment-curve slope
c_{l_i}	section design lift coefficient
c	local chord of wing or tail
$\bar{c}$	mean aerodynamic chord of wing
$\frac{dC_m}{dC_L}$	pitching-moment-curve slope
$\left(\frac{L}{D}\right)_{max}$	maximum lift-drag ratio
M	Mach number
t	wing section thickness
α	angle of attack of fuselage horizontal reference plane
β	angle of sideslip of model vertical plane of symmetry

MODEL NOTATION

Model Component Symbols

A	bomb
B_1	basic fuselage
B_2	area-rule fuselage
B_3	moment-of-area-rule fuselage
C	canopy
D	dorsal fin
F_S	side-fuselage dive flaps
F_U	underfuselage dive flap
G	gun housing
H	horizontal tail
M_{2F}	two M missiles, fuselage mounted
M_{2T}	two M missiles, wing-tip mounted
M_{4F}	four M missiles, fuselage mounted
M_{4M}	four M missiles, mounted on moment-of-area pods and pylons
M_{4T}	four M missiles, wing-tip mounted
N_{2T}	two N missiles, wing-tip mounted
N_{4T}	four N missiles, wing-tip mounted
N_{4W}	four N missiles, underwing mounted
P_M	moment-of-area pods and pylons for four M missile installation

P_T	wing-tip pylon for four M missile installation
T_T	two storage tanks, wing-tip mounted
T_W	two storage tanks, underwing mounted
V	vertical tail
W_1	wing with fixed leading-edge flap
W_2	wing with NACA a = 0.8 (modified) mean line, $c_{l_i} = 0.2$

Complete Model Symbols

S_1	W_1B_1CDHV
S_2	W_2B_1CDHV
S_3	W_1B_2CDHV
S_4	W_1B_3CDHV

APPARATUS AND MODEL

The Ames 2- by 2-foot transonic wind tunnel is a closed-circuit, variable-pressure tunnel in which the Mach number can be varied continuously to 1.4. A complete description of the wind tunnel and its air-flow characteristics is provided in reference 4. Figure 1 is a photograph of the model installed in the wind tunnel.

Drawings of the various model configurations are presented in figures 2 through 11. Included in these drawings is pertinent information describing and locating the various model appendages.

The basic model had a fuselage of fineness ratio 9.25, an unswept wing of aspect ratio 2.45, an unswept horizontal tail mounted high on a vertical stabilizer, a canopy, and a dorsal fin. The basic wing had a fixed leading-edge flap having deflections at the root and tip of $1^{\circ}53'$ and $3^{\circ}47'$, respectively. Variations of the basic configuration included: (1) the basic wing replaced by one having an NACA camber line; (2) the fuselage contoured according to the area rule; (3) a variety of conventional missile and external-store installations; (4) a missile installation designed according to the moment-of-area rule; and (5) two fuselage dive-flap arrangements. The models and model components are identified

throughout the report by configuration symbols defined in the Model Notation section. The geometric characteristics of the fuselages, wings, horizontal tail, and vertical tail are given in table I. The variations of model cross-sectional area with fuselage station are shown in figure 12(a) for the basic model (S_1) and the configuration modified according to the area rule (S_3). Figures 12(b) and 12(c) include the area distributions and second moment-of-area distributions, respectively, for the basic model, the conventional four-missile tip installation (S_1M_{4T}), the four-missile installation design according to the moment-of-area rule (S_4M_{4M}), and a Sears-Haack theoretical distribution.

The basic model fuselage was made of aluminum, the wings and empennage of steel, and the external stores of brass. All surfaces were polished smooth.

The model was sting-supported in the wind tunnel on a flexure-pivot, internal strain-gage balance of the type described in reference 4.

TESTS, CORRECTIONS, AND PRECISION

Tests were conducted to determine static longitudinal aerodynamic characteristics of the model alone and in combination with the various external stores and dive flaps. Tests were made also to determine static lateral-directional aerodynamic characteristics of only the basic model with and without the empennage. For both the longitudinal and lateral-directional phases of the wind-tunnel tests, data were obtained at Mach numbers from 0.8 to 1.4 and at a Reynolds number of 1.5×10^6 based on the mean aerodynamic chord of the wing. Lift, drag, and pitching moment were measured at angles of attack from approximately -2° to approximately 12° at zero angle of sideslip in the study of the longitudinal characteristics. For the lateral-directional-characteristics investigation, lift, drag, pitching moment, crosswind force, yawing moment, and rolling moment were determined throughout a sideslip angle range from approximately -5° to approximately 8° at angles of attack of approximately 3°, 7°, and 11°.

Corrections have been applied as follows: (1) to the model angles of attack and sideslip for deflection of the model support and balance resulting from aerodynamic loads; and (2) to the drag to adjust for the difference between the measured model base pressure and the free-stream static pressure. Corrections to the data for air-stream angularity, which was negligible, and for wind-tunnel-wall interference effects have not been made. An estimate of the magnitude of the wall-interference effects can be obtained from the theory of reference 5 and the preliminary experimental results of reference 4. The latter results indicate significant interference effects at the low supersonic Mach numbers for a model comparable in size to those of the present investigation (about 1-percent blockage ratio). Because of configuration differences, however, the

results of reference 4 are not quantitatively applicable to the results of the present investigation. In the discussion of the results in the following sections of the present report, emphasis is placed upon evaluating effects of change in configuration and upon qualitative trends so that the conclusions drawn should be affected little by such wall interference as may have existed. Apart from systematic errors resulting from neglecting the wall interference, certain random errors exist which determine the precision or repeatability of the data. The random errors are as follows:

M	± 0.003	C_L	± 0.005
α	$\pm 0.03^\circ$	C_C	± 0.002
β	$\pm 0.03^\circ$	C_l	± 0.0002
C_D	± 0.001	C_m	± 0.005
		C_n	± 0.001

RESULTS AND DISCUSSION

General

The basic data of the subject investigation are presented in tables II and III for the longitudinal and the lateral-directional tests, respectively. All force coefficients were based on the wing area as projected to the horizontal plane, including that portion within the fuselage. The pitching-moment coefficient was based on the wing mean aerodynamic chord, and the rolling-moment and yawing-moment coefficients were based on the horizontal projection of the wing span. The force coefficients are referred to the wind axes, and the moment coefficients to the stability axes, the reference point for the moments being located at $0.25\bar{c}$ on the fuselage reference line.

Longitudinal Characteristics

The variations of lift coefficient with angle of attack, drag coefficient, and pitching-moment coefficient at Mach numbers from 0.8 to 1.4 are presented in figure 13 for the basic model with and without the horizontal tail. These variations of basic aerodynamic characteristics are indicative, in general, of those for the other model configurations. However, to compare in detail the characteristics of the several

configurations, the variations with Mach number of (1) minimum drag coefficient or drag coefficient at constant lift coefficient, (2) maximum lift-drag ratio, (3) lift-curve slope, and (4) pitching-moment-curve slope are plotted in figures 14 to 21. An index to these plots identifying the comparison groups with the appropriate figures is provided in table IV. This table also serves to indicate the tables and figures in which the basic aerodynamic and geometric characteristics are presented for each model configuration.

Basic model.- A study of the data of figure 13 reveals that the variations with Mach number of the longitudinal aerodynamic characteristics of the basic tail-on and -off configurations are, in general, similar to those of models having thin low-aspect-ratio wings of comparable taper and sweep (see refs. 6 and 7). Apparent for the horizontal-tail-on configurations are the pitch-up tendencies at 0.80 and 0.85 Mach number at lift coefficients above about 0.7. Also apparent are the changes in the slopes of the pitching-moment curves in the region of zero lift coefficient at transonic Mach numbers. These slope changes are indicative of an abrupt fore-and-aft center-of-lift travel observed for unswept wing models as reported in reference 6. At zero lift coefficient, there was a progressive increase in positive pitching-moment coefficient to approximately 1.05 Mach number for the configuration with the horizontal tail. This change in pitching moment is believed to be dependent upon the influence of the vertical tail on the flow over the horizontal tail and is discussed in reference 8.

Wing-camber modification.- From the variation with Mach number of drag coefficient at constant lift coefficient, presented in figure 14(a), it is noted that the configurations employing the NACA cambered wing (S_2 and S_2-H) displayed a greater minimum drag and a lower drag due to lift than did the comparable configurations using the flap-cambered wing (S_1 and S_1-H). The lesser drag due to lift of the NACA cambered wing configurations resulted in greater maximum lift-drag ratios over the test Mach number range, especially at the high subsonic Mach numbers.

An examination of figure 14(b) indicates that the type of wing camber has little significant effect on the variation with Mach number of lift-curve slope and, except for zero lift coefficient, of pitching-moment-curve slope. Near zero lift coefficient, the use of the NACA cambered wing resulted in less center-of-lift travel at the high subsonic Mach numbers than that noted for the flap-cambered configurations, particularly for the configuration with the horizontal tail removed.

Area-rule fuselage modification.- A reduction in minimum drag coefficient resulting from the area-rule modification designed according to the method of reference 1 (configuration S_3) is noticeable in figure 15(a) beginning at 0.95 Mach number and amounting to as much as 0.003 at supersonic Mach numbers. The variation with Mach number of the maximum

lift-drag ratio of the two configurations is a result of the minimum drag variation, the drag due to lift remaining essentially unchanged with configuration change.

The results of figure 15(b) indicate that the fuselage modification had little effect on the variation with Mach number of either the lift-curve or the pitching-moment-curve slopes.

Conventional missile M installations.- Each missile arrangement considered in this discussion and in figure 16 includes pylons and fairings.

Lower values of minimum-drag coefficient at both high subsonic and moderate supersonic Mach numbers were apparent (fig. 16(a)) for the wing-tip-mounted missile configurations as compared with the body-mounted counterparts, the differences being more obvious for the four-missile configurations. At transonic Mach numbers, the body-mounted arrangements were as good as or slightly better than the wing-mounted arrangements. For either arrangement, the increment in minimum-drag coefficient per missile was about the same for four missiles as for two.

The main points to note about the comparisons of maximum lift-drag ratio (fig. 16(a)) are that the values for the tip-mounted missile configurations were (1) higher than those for body-mounted missile configurations, and (2) for the two-missile tip arrangement, equal to or higher than those for the configuration without missiles. These results are indicative of a reduction in drag due to lift believed to be attributable to an end-plate effect of the tip-mounted missile configurations resulting in an increase in effective aspect ratio, and also to an increase in geometric aspect ratio of the two-missile tip configuration.

An aspect-ratio effect is also indicated by the comparisons of lift-curve slope presented in figure 16(b). A further effect of the addition of the tip-mounted missiles was the reduction of the abrupt fore-and-aft travel of the center of lift for the model near sonic speed and the zero-lift-coefficient condition (fig. 16(b)). The variation with Mach number of the pitching-moment-curve slope at lifting conditions, however, was generally similar for all the configurations.

Conventional missile N installations.- The variations of minimum drag coefficient with Mach number (fig. 17(a)) are indicative of the apparent dependence of the drag level on, primarily, the number of N missiles carried rather than on the wing mounting position. The increment in minimum drag coefficient per missile, however, was less for the four-missile than for the two-missile configurations.

An aspect-ratio effect on maximum lift-drag ratio similar to that previously discussed for the tip-mounted M missiles is also apparent from the results for the tip-mounted N missile configurations (fig. 17(a)).

The aspect-ratio effect is also indicated in the lift-curve-slope variation with Mach number (fig. 17(b)). Both the wing-tip and underwing N missile mountings had an effect on the center-of-lift travel similar to that for the tip-mounted M missiles, that is, a reduction in the abrupt fore-and-aft movement near sonic speed for lift conditions near zero (fig. 17(b)).

Moment-of-area missile M installation.- In applying the moment-of-area method (ref. 2) to the design of the missile installation, the procedure described in reference 3 was followed. Since the description is given in some detail, it will be sufficient here to state the essential requirement for obtaining low values of zero-lift wave drag at sonic and low supersonic Mach numbers. The requirement is that the longitudinal progression of the perpendicular cross-sectional area and the second moment of the area about the vertical plane of symmetry be smooth and gradual. The extent to which this requirement is met by the present design is indicated in figures 12(b) and 12(c) wherein the distributions of the area and second moment of area are compared with desirable Sears-Haack theoretical distributions. Also shown are the corresponding distributions for the basic configuration without missiles and with the conventional wing-tip installation of missiles. It is to be noted that the area distribution of the moment-of-area configuration was improved by the addition of volume to the fuselage. This volume and the volume added by the auxiliary bodies amounted to 9 percent of the basic-configuration volume.

It is observed from figure 18(a) that, compared with the conventional wing-tip installation, the moment-of-area missile installation of four missiles had higher values of $C_{D_{min}}$ at Mach numbers below 0.96 and lower values above that Mach number. The higher subsonic level is attributable to the skin-friction drag associated with the greater surface area of the moment-of-area configuration. If it is assumed that a skin-friction drag increase of the same order of magnitude also occurred at sonic and supersonic speeds, it can be concluded that the moment-of-area configuration provided lower wave drag than the conventional installation. Also of interest are the drag values for the configurations corresponding to the launched-missile condition (i.e., configurations S_4P_M and S_1P_T). It is noted that the auxiliary bodies and missile pylons can be carried for less drag than the conventional wing-tip pylons at supersonic Mach numbers to approximately 1.40. In fact, for this Mach number range, they can be carried with little or no increase in drag over that of the basic configuration (cf. configurations S_4P_M and S_1).

An examination of figure 18(a) indicates that the conventional configurations display higher values of maximum lift-drag ratio throughout the Mach number range than do their moment-of-area counterparts. The drag due to lift of the conventional configurations is sufficiently reduced by the aspect-ratio effect of the wing-tip mounting to more than offset the variation of minimum-drag coefficient noted previously.

The values of lift-curve slope (fig. 18(b)) also show the aspect-ratio effect of the conventional wing-tip installation of missiles. This effect is greater for this configuration than for the others. The center-of-lift travel near zero lift in the transonic Mach number range for both the conventional and moment-of-area missile configurations was less than that of the basic model (fig. 18(b)). In general, the moment-of-area configurations displayed a slight destabilizing effect as compared with the basic model and the conventional missile and pylon configurations throughout the Mach number range of the investigation.

External storage tank installations.- Of particular note is the increase in minimum drag due to the addition of two underwing tanks to the configuration having two wing-tip tanks (fig. 19(a)). The drag increment per tank for the underwing mounting was approximately twice that for the wing-tip tank arrangement. Although these differences in minimum drag were reflected in the variation of maximum lift-drag ratio with Mach number, the generally lower drag due to lift at supersonic Mach numbers of the configurations with tanks, especially the one having four tanks, lessened the differences in maximum lift-drag ratio that otherwise would have occurred.

As in the case of the wing-tip-mounted missile arrangements discussed previously, the high values of lift-curve slope for the tank configurations as compared with the basic model (fig. 19(b)), are considered to result from an increased effective aspect ratio produced by the mounting arrangement of the tanks. There was appreciable reduction in the magnitude and abruptness of the center-of-lift travel near zero lift resulting from the addition of the external wing tanks to the basic configuration (fig. 19(b)). An examination of the horizontal-tail-on and -off data at zero lift coefficient indicates that the longitudinal stability characteristics of the wing and also the stability contribution of the horizontal tail, especially at high subsonic Mach numbers, were noticeably influenced by the tanks.

Bomb and gun-housing installations.- The major effects of the bomb or the gun housing on the longitudinal aerodynamic characteristics were an increase in minimum drag and a decrease in maximum lift-drag ratio relative to the characteristics of the basic model as shown in figure 20(a). Although the maximum frontal area of the bomb was only 80 percent that of the gun housing, the values of minimum-drag coefficient for the bomb configuration were higher than those for the gun-housing configuration by approximately 0.0010 at subsonic Mach numbers and 0.0030 at supersonic Mach numbers. Little effect of either the bomb or the gun housing on the lift- or pitching-moment-curve slopes is indicated in figure 20(b).

Dive-flap installations.- The most significant point about the drag results (fig. 21(a)) is that the underfuselage flap was nearly twice as effective as the side-fuselage flaps on the basis of the drag increment

per unit area - the frontal area of the underfuselage flap was half that of the two side-fuselage flaps, and yet it provided drag increments that were within 10 percent of those for the side-fuselage flaps. The lower effectiveness of the side-fuselage flap arrangement is attributable in part to the lower dynamic pressure in the vicinity of these flaps resulting from the wake of the wing. There is good possibility, furthermore, that up to sonic speed the side flaps increased the pressures over the rear portion of the wing which would result in an appreciable reduction in wing drag and thereby offset the direct drag increments due to the flaps. Drag and pressure-distribution data concerning this effect of side-mounted flaps are presented in reference 9. A comparison of the drag values for the configurations with and without the horizontal tail indicates that the horizontal-tail drag was reduced by the presence of the side-fuselage flaps; whereas it was increased by the presence of the underfuselage flap over that for the basic model.

The effects of the dive flaps on the lift-curve slope (fig. 21(b)) were sizable for the zero-lift condition at subsonic Mach numbers; the underfuselage flap configuration had higher and the side-fuselage flap configuration had lower values of lift-curve slope as compared with those of the basic model. This was true for both the tail-on and tail-off conditions. Appreciable effects of the dive flaps on the center-of-lift location are apparent from the variations of the pitching-moment-curve slopes with Mach number (fig. 21(b)). Neither flap configuration showed the abrupt forward movement of the center-of-lift characteristic of the basic model near the zero-lift condition. For the side-fuselage flap configuration, however, there was an abrupt rearward movement of the center of lift beginning at Mach numbers 0.95 and 0.98 for the tail-off and tail-on configurations, respectively, at lift coefficients near zero.

An increase in positive pitching-moment coefficient at zero lift coefficient resulted from the addition of the fuselage flaps to the basic, horizontal-tail-on configuration, in general, as is apparent from an examination of the basic data (table II). This increase in pitching-moment coefficient for the underfuselage flap configuration amounted to as much as 0.050 at Mach number 0.8, diminishing to the basic model value at approximately Mach number 1.35. For the side-fuselage flap configuration, this incremental pitching-moment coefficient at subsonic Mach numbers was considerably less than that for the underfuselage flap configuration, but increased to about 0.070 at Mach number 1.40.

Static Lateral-Directional Characteristics Tests

The data of the static lateral-directional characteristics tests are provided in table III for the basic model with and without the empennage. Plots of static lateral-directional slope parameters as functions of Mach number, angle of sideslip, and angle of attack are presented in figure 22.

The variations with Mach number of the slopes of the rolling-moment curve, yawing-moment curve, and crosswind-force curve are indicative of favorable lateral-directional characteristics of the basic model at angles of sideslip to 7.5° and angles of attack to 11°, which were the limits of the test. Of particular importance is the fact that the basic configuration, S_1, displayed approximately the same amount of directional stability and dihedral effect (C_{n_β} and C_{l_β}, respectively) at 1.4 Mach number as at 0.8 Mach number at the test angles of attack of 3°, 7°, and 11°. The abrupt changes in C_{n_β} and C_{l_β} noted for the basic configuration at transonic Mach numbers, particularly at the higher angles of attack, were apparently related to a change in the air-flow characteristics around the empennage since no similar changes in the data were noted for the configuration less the empennage. The effect of the empennage was observed to be sufficient to offset the inherent negative dihedral effect of the configuration without the tail assembly.

CONCLUSIONS

A wind-tunnel investigation of an airplane model with a 3.4-percent-thick unswept wing of aspect ratio 2.45 has been conducted over a Mach number range from 0.8 to 1.4 at a Reynolds number of 1.5 million. The following conclusions were drawn from the results of this investigation:

1. The longitudinal aerodynamic characteristics at transonic Mach numbers of the basic model were similar to those previously observed for models having thin low-aspect-ratio wings of comparable taper and sweep. A horizontal-tail-on pitch-up tendency was indicated at Mach numbers of 0.80 and 0.85 beginning at a lift coefficient of approximately 0.7 for the basic model.

2. The configurations having a wing with an NACA mean-line camber, in place of the basic leading-edge-flap cambered wing, had: (1) higher minimum drag coefficient; (2) appreciably lower drag due to lift; (3) higher values of maximum lift-drag ratio, particularly at subsonic Mach numbers; and (4) less center-of-lift travel near zero-lift coefficient at transonic Mach numbers.

3. An area-rule modification to the fuselage of the basic model resulted in a reduction in minimum drag coefficient and in an increase in maximum lift-drag ratio at Mach numbers from 0.95 to 1.40.

4. Lower values of minimum drag coefficient at subsonic and supersonic Mach numbers resulted, generally, from mounting various external stores on the wing tips rather than beneath the wing or on the fuselage. The wing-tip store installations also produced higher values of maximum lift-drag ratio than did the comparable fuselage and underwing

installations, primarily because of the reduced drag due to lift resulting from the effective increase in aspect ratio created by the former store mounting arrangement.

5. Wing-tip mounting of external stores resulted in a reduction of center-of-lift travel at transonic Mach numbers near zero lift and in a general increase in the values of lift-curve slope as compared with the basic model.

6. A configuration with the missile mounting designed according to the moment-of-area rule had lower values of minimum drag coefficient at transonic and supersonic Mach numbers than did the comparable conventional wing-tip installation. This advantageous reduction of minimum drag was offset by relatively higher drag due to lift, resulting in generally lower maximum lift-drag ratios for the moment-of-area configurations than for the conventional configurations.

7. The addition of two simulated storage tanks mounted beneath the wings to a configuration already having two such tanks mounted on the wing tips resulted in a drag increment per tank twice that resulting from the addition of two tip tanks to the basic configuration.

8. Although the two side-fuselage flaps had twice the projected frontal area of the single underfuselage flap, the increment of minimum drag coefficient for the side-fuselage flap configuration was only about 10 percent more than that for the underfuselage flap configuration. The lift-curve-slope and pitching-moment-curve-slope variations with Mach number were generally more favorable for the underfuselage flap configuration.

9. The complete basic model had favorable lateral-directional characteristics to the test limits of 7° angle of sideslip and 11° angle of attack throughout the test Mach number range.

Ames Aeronautical Laboratory
National Advisory Committee for Aeronautics
Moffett Field, Calif., May 22, 1956

REFERENCES

1. Holdaway, George H.: Comparison of Theoretical and Experimental Zero-Lift Drag-Rise Characteristics of Wing-Body-Tail Combinations Near the Speed of Sound. NACA RM A53H17, 1953.

2. Baldwin, Barrett S., and Dickey, Robert R.: Application of Wing-Body Theory to Drag Reduction at Low Supersonic Speeds. NACA RM A54J19, 1955.

3. Levy, Lionel L., Jr., and Dickey, Robert R.: External-Store Drag Reduction at Transonic and Low Supersonic Mach Numbers by Application of Baldwin's Moment-of-Area Rule. NACA RM A55L14a, 1956.

4. Spiegel, Joseph M., and Lawrence, Leslie F.: A Description of the Ames 2- by 2-Foot Transonic Wind Tunnel and Preliminary Evaluation of Wall Interference. NACA RM A55I21, 1956.

5. Baldwin, Barrett S., Jr., Turner, John B., and Knechtel, Earl D.: Wall Interference in Wind Tunnels With Slotted and Porous Boundaries at Subsonic Speeds. NACA TN 3176, 1954.

6. Summers, James L., Treon, Stuart L., and Graham, Lawrence A.: Effects of Taper Ratio on the Longitudinal Characteristics at Mach Numbers From 0.6 to 1.4 of a Wing-Body-Tail Combination Having an Unswept Wing of Aspect Ratio 3. NACA RM A54L20, 1955.

7. Knechtel, Earl D., and Summers, James L.: Effects of Sweep and Taper Ratio on the Longitudinal Characteristics of an Aspect Ratio 3 Wing-Body Combination at Mach Numbers From 0.6 to 1.4. NACA RM A55A03, 1955.

8. Smith, Willard G.: Wind-Tunnel Investigation at Subsonic and Supersonic Speeds of a Fighter Model Employing a Low-Aspect-Ratio Unswept Wing and a Horizontal Tail Mounted Well Above the Wing Plane - Longitudinal Stability and Control. NACA RM A54D05, 1954.

9. Arabian, Donald D.: Effect of Fuselage Air Brakes on the Longitudinal Stability Characteristics of a Swept-Wing Fighter Model at Transonic Speeds. NACA RM L56A25a, 1956.

[redacted]

TABLE I.- GEOMETRIC SPECIFICATIONS OF MAJOR MODEL COMPONENTS

Fuselages B_1, B_2, and B_3	
Length (to exit face), in.	24.6
Maximum frontal area, sq in.	5.28
Fineness ratio	9.50
Wing W_1	
Airfoil section; forward 0.5c elliptical, aft 0.5c circular arc; root and tip thickness ratio, percent c	3.4
Area, horizontal projection including the portion within body, sq in.	45.16
Mean aerodynamic chord, in.	4.58
Span, in.	10.53
Aspect ratio	2.45
Taper ratio	0.38
Sweep of quarter-chord line in plane of wing, deg	18.2
Unswept element, percent c	70.4
Incidence, deg	0
Dihedral, deg	-10
Leading-edge flaps	
Area, sq in.	3.72
Chord, percent c	14.6
Deflection, deg	
Root	1.9
Tip	3.8
Wing W_2	
Same as W_1 except leading-edge-flap type camber replaced by NACA $a = 0.8$ (modified) mean line, $c_{l_i} = 0.2$	
Horizontal tail H	
Airfoil section; forward 0.5c elliptical, aft 0.5c circular arc;	
Root thickness ratio, percent c	4.9
Tip thickness ratio, percent c	2.6
Area, sq in.	11.09
Mean aerodynamic chord, in.	2.12
Aspect ratio	2.95
Taper ratio	.31
Sweep of quarter-chord line, deg	10.1
Unswept element, percent c	50
Incidence, deg	0
Dihedral, deg	0
Vertical tail V	
Airfoil section; forward 0.5c elliptical, aft 0.5c circular arc;	
Root thickness ratio, percent c	4.3
Tip thickness ratio, percent c	5.0
Area, sq in.	8.06
Mean aerodynamic chord, in.	3.44
Aspect ratio	0.87
Taper ratio	0.46
Sweep of quarter-chord line, deg	35
Unswept element, percent c	89.3

TABLE II.- STATIC LONGITUDINAL AERODYNAMIC DATA FOR THE BASIC MODEL AND ITS VARIOUS CONFIGURATIONS

(a) Configuration S_1

M	α	C_L	C_D	C_m
0.80	-0.163	-0.170	0.0235	0.052
0.80	-0.109	-0.127	0.0211	0.044
0.80	-0.003	-0.053	0.0183	0.029
0.80	0.102	0.012	0.0173	0.016
0.80	0.210	0.086	0.0192	0.003
0.80	0.317	0.170	0.0229	-0.012
0.80	0.425	0.247	0.0282	-0.021
0.80	0.532	0.329	0.0364	-0.029
0.80	0.641	0.412	0.0489	-0.036
0.80	0.856	0.573	0.0855	-0.056
0.80	1.066	0.697	0.1390	-0.101
0.80	1.274	0.792	0.1881	-0.121
0.80	1.483	0.855	0.2358	-0.124
0.85	-0.164	-0.176	0.0242	0.055
0.85	-0.110	-0.130	0.0219	0.046
0.85	-0.003	-0.054	0.0194	0.031
0.85	0.103	0.008	0.0181	0.021
0.85	0.211	0.087	0.0201	0.007
0.85	0.319	0.170	0.0238	-0.009
0.85	0.427	0.254	0.0295	-0.019
0.85	0.536	0.341	0.0392	-0.028
0.85	0.646	0.432	0.0536	-0.036
0.85	0.864	0.611	0.0936	-0.060
0.85	1.070	0.714	0.1444	-0.113
0.85	1.279	0.812	0.1950	-0.137
0.85	1.489	0.883	0.2455	-0.141
0.90	-0.164	-0.179	0.0262	0.059
0.90	-0.110	-0.133	0.0231	0.048
0.90	-0.003	-0.057	0.0205	0.033
0.90	0.104	0.009	0.0193	0.022
0.90	0.211	0.089	0.0209	0.009
0.90	0.320	0.178	0.0253	-0.007
0.90	0.430	0.267	0.0321	-0.019
0.90	0.539	0.364	0.0440	-0.033
0.90	0.649	0.462	0.0601	-0.048
0.90	0.870	0.668	0.1075	-0.089
0.95	-0.165	-0.181	0.0302	0.060
0.95	-0.110	-0.140	0.0285	0.057
0.95	-0.002	-0.067	0.0252	0.046
0.95	0.105	-0.007	0.0234	0.043
0.95	0.213	0.070	0.0253	0.034
0.95	0.323	0.160	0.0304	0.017
0.95	0.433	0.262	0.0391	-0.002
0.95	0.543	0.375	0.0532	-0.028
0.95	0.653	0.489	0.0722	-0.060
0.95	0.872	0.702	0.1215	-0.113
0.95	1.091	0.870	0.1797	-0.148
0.98	-0.162	-0.193	0.0385	0.089
0.98	-0.108	-0.145	0.0353	0.078
0.98	0.001	-0.060	0.0323	0.064
0.98	0.110	0.028	0.0313	0.051
0.98	0.220	0.122	0.0354	0.031
0.98	0.330	0.224	0.0427	0.009
0.98	0.441	0.323	0.0526	-0.011
0.98	0.549	0.421	0.0665	-0.033
0.98	0.659	0.523	0.0849	-0.057
0.98	0.877	0.707	0.1313	-0.102
0.98	1.095	0.878	0.1894	-0.142
0.98	1.314	1.043	0.2600	-0.176
1.00	-0.161	-0.197	0.0433	0.102
1.00	-0.107	-0.153	0.0408	0.094
1.00	0.003	-0.063	0.0370	0.078
1.00	0.112	0.036	0.0363	0.055
1.00	0.222	0.131	0.0401	0.035
1.00	0.331	0.226	0.0468	0.013
1.00	0.441	0.324	0.0562	-0.008
1.00	0.550	0.424	0.0710	-0.030
1.00	0.661	0.523	0.0891	-0.052
1.00	0.878	0.705	0.1350	-0.096
1.00	1.096	0.879	0.1933	-0.137
1.00	1.313	1.040	0.2625	-0.170
1.03	-0.162	-0.209	0.0466	0.114
1.03	-0.106	-0.161	0.0434	0.104
1.03	0.004	-0.058	0.0397	0.081
1.03	0.114	0.047	0.0396	0.055
1.03	0.223	0.144	0.0439	0.034
1.03	0.332	0.237	0.0512	0.011
1.03	0.442	0.333	0.0609	-0.011
1.03	0.550	0.423	0.0744	-0.033
1.03	0.659	0.515	0.0917	-0.055
1.03	0.877	0.693	0.1366	-0.093
1.03	1.095	0.864	0.1944	-0.129
1.03	1.312	1.014	0.2546	-0.156
1.05	-0.157	-0.189	0.0463	0.120
1.05	-0.103	-0.145	0.0434	0.108
1.05	0.007	-0.049	0.0413	0.087
1.05	0.115	0.047	0.0408	0.069
1.05	0.224	0.144	0.0449	0.035
1.05	0.334	0.240	0.0522	0.012
1.05	0.443	0.332	0.0613	-0.010
1.05	0.552	0.421	0.0748	-0.028
1.05	0.662	0.514	0.0918	-0.048
1.05	0.879	0.683	0.1353	-0.087
1.05	1.097	0.848	0.1921	-0.121
1.10	-0.161	-0.216	0.0496	0.122
1.10	-0.107	-0.166	0.0459	0.107
1.10	0.002	-0.076	0.0420	0.082
1.10	0.111	0.018	0.0411	0.059
1.10	0.221	0.116	0.0440	0.033
1.10	0.331	0.210	0.0506	0.012
1.10	0.441	0.297	0.0602	-0.003
1.10	0.550	0.389	0.0729	-0.021
1.10	0.662	0.489	0.0901	-0.041
1.10	0.880	0.674	0.1340	-0.088
1.10	1.098	0.840	0.1893	-0.131
1.20	-0.158	-0.178	0.0481	0.109
1.20	-0.105	-0.134	0.0452	0.094
1.20	0.004	-0.046	0.0419	0.064
1.20	0.111	0.039	0.0415	0.037
1.20	0.220	0.129	0.0449	0.008
1.20	0.328	0.216	0.0515	-0.018
1.20	0.437	0.305	0.0612	-0.044
1.20	0.546	0.398	0.0737	-0.066
1.20	0.655	0.479	0.0893	-0.087
1.20	0.872	0.658	0.1299	-0.150
1.20	1.089	0.817	0.1821	-0.192
1.30	-0.162	-0.175	0.0480	0.084
1.30	-0.109	-0.135	0.0444	0.071
1.30	-0.001	-0.058	0.0407	0.045
1.30	0.105	0.022	0.0402	0.019
1.30	0.214	0.103	0.0423	-0.007
1.30	0.321	0.183	0.0478	-0.032
1.30	0.429	0.261	0.0563	-0.055
1.30	0.536	0.342	0.0675	-0.090
1.30	0.644	0.421	0.0812	-0.100
1.30	0.861	0.582	0.1188	-0.144
1.30	1.078	0.739	0.1681	-0.181
1.30	1.296	0.884	0.2268	-0.206
1.40	-0.159	-0.152	0.0462	0.081
1.40	-0.107	-0.115	0.0435	0.067
1.40	0.000	-0.043	0.0401	0.041
1.40	0.106	0.031	0.0396	0.015
1.40	0.215	0.109	0.0423	-0.012
1.40	0.321	0.184	0.0474	-0.038
1.40	0.428	0.259	0.0556	-0.063
1.40	0.536	0.334	0.0663	-0.086
1.40	0.642	0.407	0.0796	-0.108

TABLE II.- STATIC LONGITUDINAL AERODYNAMIC DATA FOR THE BASIC MODEL AND ITS VARIOUS CONFIGURATIONS - Continued

(b) Configuration S_1-H

M	α	C_L	C_D	C_m
0.80	-01.68	-0.129	0.0212	-0.026
0.80	-01.14	-0.094	0.0197	-0.022
0.80	-00.05	-0.032	0.0179	-0.011
0.80	01.02	0.021	0.0171	0.004
0.80	02.11	0.085	0.0190	0.016
0.80	03.20	0.154	0.0222	0.025
0.80	04.30	0.223	0.0269	0.036
0.80	05.39	0.296	0.0335	0.049
0.80	06.49	0.369	0.0450	0.060
0.80	08.67	0.515	0.0808	0.070
0.80	10.79	0.632	0.1307	0.046
0.85	-01.70	-0.133	0.0219	-0.028
0.85	-01.15	-0.099	0.0203	-0.023
0.85	-00.06	-0.035	0.0185	-0.011
0.85	01.03	0.019	0.0175	0.006
0.85	02.12	0.086	0.0198	0.017
0.85	03.22	0.158	0.0233	0.027
0.85	04.33	0.234	0.0280	0.039
0.85	05.43	0.310	0.0368	0.051
0.85	06.54	0.388	0.0495	0.060
0.85	08.75	0.556	0.0878	0.071
0.90	-01.72	-0.136	0.0228	-0.029
0.90	-01.17	-0.100	0.0207	-0.024
0.90	-00.06	-0.035	0.0191	-0.011
0.90	01.02	0.014	0.0185	0.009
0.90	02.13	0.084	0.0202	0.021
0.90	03.24	0.160	0.0242	0.032
0.90	04.36	0.241	0.0310	0.043
0.90	05.47	0.327	0.0414	0.051
0.90	06.60	0.420	0.0567	0.054
0.90	08.82	0.602	0.0999	0.049
0.95	-01.73	-0.140	0.0246	-0.030
0.95	-01.17	-0.103	0.0234	-0.021
0.95	-00.07	-0.043	0.0217	-0.003
0.95	01.03	0.003	0.0205	0.020
0.95	02.14	0.068	0.0227	0.038
0.95	03.26	0.152	0.0281	0.045
0.95	04.38	0.236	0.0349	0.051
0.95	05.50	0.340	0.0484	0.044
0.95	06.63	0.453	0.0674	0.032
0.95	08.84	0.641	0.1129	0.013
0.98	-01.72	-0.147	0.0318	-0.019
0.98	-01.17	-0.111	0.0308	-0.011
0.98	-00.05	-0.035	0.0282	-0.003
0.98	01.05	0.044	0.0277	0.006
0.98	02.19	0.130	0.0314	0.010
0.98	03.29	0.218	0.0386	0.010
0.98	04.41	0.307	0.0480	0.009
0.98	05.52	0.403	0.0623	0.004
0.98	06.64	0.492	0.0781	0.002
0.98	08.85	0.665	0.1239	-0.010
0.98	11.06	0.822	0.1781	-0.015
1.00	-01.73	-0.153	0.0372	-0.014
1.00	-01.17	-0.114	0.0345	-0.008
1.00	-00.05	-0.036	0.0326	0.000
1.00	01.06	0.051	0.0324	0.001
1.00	02.18	0.137	0.0360	0.004
1.00	03.30	0.224	0.0435	0.005
1.00	04.42	0.314	0.0527	0.004
1.00	05.53	0.407	0.0661	-0.001
1.00	06.65	0.499	0.0837	-0.006
1.00	08.86	0.667	0.1272	-0.015
1.00	11.09	0.828	0.1833	-0.026
1.03	-01.73	-0.160	0.0398	-0.006
1.03	-01.17	-0.119	0.0374	-0.002
1.03	-00.04	-0.027	0.0347	-0.001
1.03	01.08	0.067	0.0352	-0.002
1.03	02.20	0.154	0.0400	0.002
1.03	03.32	0.238	0.0473	0.001
1.03	04.44	0.324	0.0566	0.003
1.03	05.54	0.406	0.0686	0.001
1.03	06.66	0.490	0.0849	-0.003
1.03	08.87	0.660	0.1287	-0.016
1.03	11.08	0.816	0.1835	-0.039
1.05	-01.72	-0.152	0.0398	-0.004
1.05	-01.16	-0.108	0.0380	-0.004
1.05	-00.03	-0.020	0.0356	-0.001
1.05	01.09	0.067	0.0361	-0.001
1.05	02.20	0.154	0.0400	-0.002
1.05	03.32	0.240	0.0475	-0.002
1.05	04.44	0.322	0.0568	-0.002
1.05	05.55	0.407	0.0693	-0.002
1.05	06.67	0.488	0.0853	-0.005
1.05	08.88	0.648	0.1275	-0.012
1.05	11.09	0.804	0.1823	-0.024
1.10	-01.75	-0.163	0.0431	-0.008
1.10	-01.19	-0.123	0.0404	-0.008
1.10	-00.07	-0.041	0.0376	-0.006
1.10	01.05	0.040	0.0376	-0.006
1.10	02.16	0.129	0.0408	-0.006
1.10	03.28	0.211	0.0473	-0.005
1.10	04.40	0.295	0.0567	-0.004
1.10	05.51	0.377	0.0692	-0.004
1.10	06.64	0.469	0.0854	-0.008
1.10	08.87	0.639	0.1273	-0.016
1.10	11.09	0.793	0.1797	-0.024
1.20	-01.72	-0.134	0.0424	-0.010
1.20	-01.17	-0.098	0.0403	-0.011
1.20	-00.06	-0.022	0.0377	-0.013
1.20	01.04	0.054	0.0379	-0.014
1.20	02.16	0.133	0.0413	-0.016
1.20	03.27	0.210	0.0477	-0.018
1.20	04.39	0.287	0.0568	-0.021
1.20	05.49	0.366	0.0681	-0.023
1.20	06.61	0.446	0.0827	-0.025
1.20	08.83	0.601	0.1201	-0.032
1.20	11.06	0.746	0.1680	-0.032
1.30	-01.72	-0.142	0.0414	0.004
1.30	-01.17	-0.107	0.0388	0.002
1.30	-00.07	-0.040	0.0360	
1.30	01.03	0.029	0.0356	-0.002
1.30	02.14	0.098	0.0382	-0.003
1.30	03.25	0.171	0.0433	-0.005
1.30	04.35	0.240	0.0513	-0.008
1.30	05.45	0.311	0.0610	-0.010
1.30	06.56	0.383	0.0738	-0.013
1.30	08.79	0.530	0.1089	-0.020
1.30	11.00	0.674	0.1551	-0.024
1.40	-01.70	-0.117	0.0405	-0.006
1.40	-01.14	-0.086	0.0382	-0.007
1.40	-00.06	-0.024	0.0355	-0.009
1.40	01.03	0.038	0.0354	-0.010
1.40	02.13	0.104	0.0377	-0.011
1.40	03.24	0.170	0.0425	-0.013
1.40	04.34	0.237	0.0500	-0.015
1.40	05.43	0.301	0.0596	-0.016
1.40	06.54	0.367	0.0714	-0.018

TABLE II.- STATIC LONGITUDINAL AERODYNAMIC DATA FOR THE BASIC MODEL AND ITS VARIOUS CONFIGURATIONS - Continued

(c) Configuration S_2

M	α	C_L	C_D	C_m	M	α	C_L	C_D	C_m
0.80	-0.157	-0.086	0.0229	0.023	1.03	-0.161	-0.165	0.0483	0.076
0.80	-0.104	-0.050	0.0212	0.017	1.03	-0.106	-0.115	0.0449	0.064
0.80	0.003	0.028	0.0195	0.005	1.03	0.004	-0.014	0.0413	0.044
0.80	0.108	0.095	0.0196	-0.009	1.03	0.114	0.089	0.0420	0.020
0.80	0.216	0.166	0.0221	-0.021	1.03	0.225	0.191	0.0466	-0.005
0.80	0.321	0.239	0.0269	-0.033	1.03	0.334	0.289	0.0553	-0.026
0.80	0.429	0.319	0.0332	-0.046	1.03	0.444	0.383	0.0659	-0.047
0.80	0.537	0.396	0.0421	-0.051	1.03	0.552	0.471	0.0791	-0.065
0.80	0.644	0.479	0.0548	-0.058	1.03	0.662	0.563	0.0966	-0.084
0.80	0.861	0.644	0.0918	-0.074	1.03	0.880	0.742	0.1434	-0.122
0.80	1.070	0.767	0.1474	-0.111	1.03	1.100	0.913	0.2040	-0.154
0.80	1.279	0.870	0.2016	-0.131					
0.85	-0.157	-0.091	0.0239	0.026	1.05	-0.159	-0.157	0.0474	0.080
0.85	-0.104	-0.053	0.0223	0.020	1.05	-0.104	-0.103	0.0448	0.070
0.85	0.003	0.020	0.0207	0.008	1.05	0.006	-0.009	0.0421	0.048
0.85	0.109	0.101	0.0208	-0.010	1.05	0.115	0.089	0.0427	0.027
0.85	0.216	0.171	0.0234	-0.021	1.05	0.225	0.181	0.0472	0.007
0.85	0.323	0.243	0.0288	-0.032	1.05	0.335	0.282	0.0553	-0.019
0.85	0.431	0.327	0.0350	-0.045	1.05	0.444	0.375	0.0658	-0.039
0.85	0.539	0.410	0.0455	-0.052	1.05	0.554	0.466	0.0799	-0.059
0.85	0.649	0.498	0.0595	-0.059	1.05	0.663	0.554	0.0968	-0.076
0.85	0.868	0.678	0.0992	-0.076	1.05	0.881	0.731	0.1426	-0.114
0.85	1.079	0.813	0.1545	-0.112	1.05	1.100	0.905	0.2022	-0.151
0.90	-0.158	-0.095	0.0265	0.029	1.10	-0.162	-0.174	0.0510	0.079
0.90	-0.097	-0.060	0.0245	0.025	1.10	-0.108	-0.138	0.0481	0.068
0.90	0.003	0.026	0.0218	0.006	1.10	0.001	-0.038	0.0442	0.043
0.90	0.110	0.106	0.0223	-0.009	1.10	0.110	0.056	0.0436	0.019
0.90	0.219	0.180	0.0247	-0.021	1.10	0.220	0.155	0.0469	-0.006
0.90	0.326	0.258	0.0297	-0.033	1.10	0.329	0.251	0.0539	-0.031
0.90	0.435	0.344	0.0374	-0.046	1.10	0.440	0.342	0.0648	-0.044
0.90	0.545	0.435	0.0489	-0.056	1.10	0.549	0.438	0.0775	-0.062
0.90	0.654	0.533	0.0654	-0.070	1.10	0.660	0.529	0.0954	-0.077
0.90	0.873	0.736	0.1126	-0.105	1.10	0.881	0.725	0.1416	-0.123
					1.10	1.098	0.893	0.1981	-0.163
0.95	-0.159	-0.091	0.0311	0.019	1.20	-0.160	-0.153	0.0495	0.076
0.95	-0.105	-0.048	0.0293	0.012	1.20	-0.107	-0.111	0.0467	0.061
0.95	0.004	0.031	0.0268	0.002	1.20	0.008	-0.021	0.0431	0.031
0.95	0.113	0.113	0.0271	-0.009	1.20	0.109	0.068	0.0434	0.002
0.95	0.222	0.196	0.0304	-0.020	1.20	0.218	0.155	0.0476	-0.024
0.95	0.329	0.276	0.0359	-0.031	1.20	0.326	0.238	0.0539	-0.048
0.95	0.438	0.368	0.0449	-0.049	1.20	0.435	0.333	0.0640	-0.078
0.95	0.547	0.470	0.0605	-0.070	1.20	0.543	0.418	0.0769	-0.100
0.95	0.658	0.576	0.0803	-0.094	1.20	0.653	0.507	0.0933	-0.122
0.95	0.874	0.763	0.1287	-0.140	1.20	0.872	0.682	0.1349	-0.167
0.95	1.093	0.942	0.1904	-0.176	1.20	1.089	0.855	0.1888	-0.221
0.98	-0.161	-0.145	0.0396	0.050	1.30	-0.163	-0.151	0.0468	0.067
0.98	-0.107	-0.094	0.0367	0.038	1.30	-0.110	-0.111	0.0441	0.042
0.98	0.003	-0.005	0.0344	0.026	1.30	-0.003	-0.031	0.0408	0.014
0.98	0.111	0.081	0.0341	0.013	1.30	0.104	0.050	0.0406	-0.012
0.98	0.221	0.178	0.0379	-0.005	1.30	0.212	0.131	0.0435	-0.039
0.98	0.331	0.277	0.0438	-0.027	1.30	0.320	0.211	0.0494	-0.064
0.98	0.441	0.372	0.0558	-0.044	1.30	0.428	0.289	0.0581	-0.088
0.98	0.550	0.463	0.0703	-0.061	1.30	0.535	0.370	0.0697	-0.112
0.98	0.660	0.561	0.0890	-0.082	1.30	0.643	0.451	0.0844	-0.135
0.98	0.878	0.759	0.1378	-0.129	1.30	0.861	0.612	0.1231	-0.177
0.98	1.097	0.941	0.2001	-0.170	1.30	1.079	0.771	0.1733	-0.215
1.00	-0.160	-0.150	0.0458	0.063	1.40	-0.160	-0.135	0.0467	0.060
1.00	-0.106	-0.101	0.0420	0.053	1.40	-0.108	-0.100	0.0442	0.046
1.00	0.004	-0.008	0.0393	0.037	1.40	-0.001	-0.024	0.0409	0.019
1.00	0.113	0.079	0.0392	0.024	1.40	0.105	0.050	0.0405	-0.009
1.00	0.223	0.171	0.0422	0.007	1.40	0.212	0.128	0.0431	-0.037
1.00	0.332	0.268	0.0496	-0.016	1.40	0.319	0.203	0.0487	-0.063
1.00	0.442	0.365	0.0600	-0.037	1.40	0.427	0.279	0.0571	-0.089
1.00	0.551	0.466	0.0749	-0.059	1.40	0.533	0.353	0.0678	-0.114
1.00	0.661	0.566	0.0941	-0.080	1.40	0.639	0.427	0.0814	-0.136
1.00	0.880	0.761	0.1426	-0.126					
1.00	1.099	0.936	0.2049	-0.164					

TABLE II.- STATIC LONGITUDINAL AERODYNAMIC DATA FOR THE BASIC MODEL AND ITS VARIOUS CONFIGURATIONS - Continued

(d) Configuration S_2-H

M	α	C_L	C_D	C_m	M	α	C_L	C_D	C_m
0.80	-0.164	-0.045	0.0204	-0.065	1.03	-0.174	-0.113	0.0406	-0.053
0.80	-0.109	-0.014	0.0190	-0.059	1.03	-0.117	-0.068	0.0381	-0.052
0.80	-0.001	0.050	0.0179	-0.045	1.03	-0.005	0.015	0.0353	-0.045
0.80	0.108	0.111	0.0182	-0.034	1.03	0.107	0.110	0.0363	-0.044
0.80	0.217	0.168	0.0210	-0.019	1.03	0.220	0.205	0.0416	-0.043
0.80	0.324	0.227	0.0252	-0.008	1.03	0.332	0.289	0.0491	-0.040
0.80	0.434	0.294	0.0312	0.005	1.03	0.444	0.373	0.0595	-0.038
0.80	0.543	0.388	0.0391	0.017	1.03	0.554	0.458	0.0728	-0.039
0.80	0.654	0.442	0.0510	0.030	1.03	0.665	0.542	0.0897	-0.042
0.80	0.873	0.595	0.0872	0.047	1.03	0.888	0.715	0.1363	-0.055
0.80	1.085	0.710	0.1401	0.025	1.03	1.109	0.880	0.1949	-0.064
0.80	1.295	0.803	0.1907	0.023					
0.85	-0.165	-0.043	0.0209	-0.071	1.05	-0.173	-0.105	0.0407	-0.051
0.85	-0.111	-0.010	0.0197	-0.064	1.05	-0.116	-0.056	0.0377	-0.050
0.85	-0.001	0.052	0.0191	-0.050	1.05	-0.004	0.029	0.0361	-0.046
0.85	0.108	0.117	0.0196	-0.037	1.05	0.109	0.114	0.0374	-0.043
0.85	0.217	0.176	0.0220	-0.023	1.05	0.219	0.197	0.0421	-0.041
0.85	0.327	0.238	0.0271	-0.010	1.05	0.331	0.287	0.0496	-0.044
0.85	0.437	0.309	0.0337	0.003	1.05	0.444	0.374	0.0605	-0.041
0.85	0.547	0.384	0.0423	0.016	1.05	0.554	0.456	0.0740	-0.041
0.85	0.658	0.464	0.0555	0.028	1.05	0.666	0.540	0.0906	-0.042
0.85	0.880	0.632	0.0943	0.043	1.05	0.888	0.703	0.1351	-0.050
0.85	1.094	0.753	0.1461	0.029	1.05	1.109	0.866	0.1930	-0.061
0.90	-0.166	-0.044	0.0219	-0.076	1.10	-0.176	-0.123	0.0440	-0.050
0.90	-0.112	-0.012	0.0205	-0.068	1.10	-0.120	-0.082	0.0413	-0.050
0.90	-0.001	0.055	0.0199	-0.053	1.10	-0.008	0.000	0.0386	-0.048
0.90	0.108	0.122	0.0206	-0.040	1.10	0.104	0.085	0.0390	-0.050
0.90	0.219	0.182	0.0230	-0.024	1.10	0.216	0.175	0.0427	-0.049
0.90	0.328	0.248	0.0279	-0.010	1.10	0.328	0.256	0.0496	-0.046
0.90	0.440	0.324	0.0353	0.003	1.10	0.440	0.340	0.0594	-0.044
0.90	0.551	0.407	0.0462	0.014	1.10	0.553	0.427	0.0732	-0.044
0.90	0.663	0.497	0.0620	0.019	1.10	0.665	0.520	0.0905	-0.047
0.90	0.886	0.692	0.1086	0.015	1.10	0.888	0.693	0.1350	-0.053
0.90	1.106	0.848	0.1661	0.008	1.10	1.111	0.851	0.1897	-0.058
0.95	-0.170	-0.048	0.0257	-0.092	1.20	-0.174	-0.105	0.0429	-0.044
0.95	-0.114	-0.004	0.0237	-0.084	1.20	-0.119	-0.067	0.0409	-0.045
0.95	-0.002	0.064	0.0232	-0.065	1.20	-0.007	0.007	0.0377	-0.046
0.95	0.108	0.134	0.0241	-0.052	1.20	0.103	0.085	0.0384	-0.048
0.95	0.220	0.208	0.0277	-0.040	1.20	0.215	0.164	0.0422	-0.049
0.95	0.331	0.276	0.0329	-0.026	1.20	0.327	0.242	0.0493	-0.050
0.95	0.443	0.362	0.0436	-0.022	1.20	0.438	0.322	0.0584	-0.054
0.95	0.554	0.451	0.0580	-0.022	1.20	0.549	0.402	0.0706	-0.056
0.95	0.666	0.545	0.0758	-0.022	1.20	0.661	0.483	0.0865	-0.059
0.95	0.889	0.719	0.1239	-0.029	1.20	0.884	0.642	0.1267	-0.064
0.95	1.109	0.882	0.1819	-0.033	1.20	1.107	0.788	0.1751	-0.063
0.98	-0.181	-0.142	0.0362	-0.085	1.30	-0.173	-0.118	0.0413	-0.026
0.98	-0.118	-0.057	0.0319	-0.062	1.30	-0.116	-0.085	0.0395	-0.027
0.98	-0.005	0.031	0.0283	-0.056	1.30	-0.008	-0.016	0.0356	-0.029
0.98	0.107	0.107	0.0290	-0.044	1.30	0.102	0.055	0.0355	-0.030
0.98	0.218	0.191	0.0329	-0.038	1.30	0.213	0.125	0.0385	-0.032
0.98	0.330	0.281	0.0413	-0.037	1.30	0.323	0.197	0.0439	-0.034
0.98	0.441	0.363	0.0514	-0.034	1.30	0.434	0.266	0.0520	-0.036
0.98	0.553	0.449	0.0639	-0.029	1.30	0.544	0.338	0.0627	-0.038
0.98	0.665	0.542	0.0835	-0.033	1.30	0.655	0.411	0.0765	-0.041
0.98	0.887	0.722	0.1303	-0.043	1.30	0.876	0.557	0.1122	-0.047
0.98	1.109	0.895	0.1908	-0.056	1.30	1.099	0.706	0.1607	-0.051
1.00	-0.173	-0.100	0.0378	-0.063	1.40	-0.171	-0.099	0.0412	-0.030
1.00	-0.117	-0.055	0.0355	-0.061	1.40	-0.117	-0.066	0.0385	-0.032
1.00	-0.005	0.026	0.0335	-0.053	1.40	-0.007	-0.004	0.0357	-0.034
1.00	0.108	0.106	0.0342	-0.041	1.40	0.102	0.061	0.0357	-0.036
1.00	0.219	0.188	0.0381	-0.034	1.40	0.213	0.127	0.0383	-0.037
1.00	0.331	0.275	0.0453	-0.035	1.40	0.323	0.191	0.0432	-0.037
1.00	0.442	0.361	0.0549	-0.034	1.40	0.433	0.256	0.0508	-0.039
1.00	0.555	0.454	0.0698	-0.035	1.40	0.542	0.323	0.0609	-0.041
1.00	0.666	0.548	0.0884	-0.042	1.40	0.653	0.390	0.0733	-0.042
1.00	0.888	0.730	0.1354	-0.053					
1.00	1.110	0.897	0.1948	-0.065					

TABLE II.- STATIC LONGITUDINAL AERODYNAMIC DATA FOR THE BASIC MODEL AND ITS VARIOUS CONFIGURATIONS - Continued

(e) Configuration S_3

M	α	C_L	C_D	C_m	M	α	C_L	C_D	C_m
0.80	-0.162	-0.164	0.0241	0.048	1.03	-0.161	-0.200	0.0422	0.109
0.80	-0.109	-0.124	0.0221	0.042	1.03	-0.106	-0.151	0.0393	0.101
0.80	-0.002	-0.052	0.0194	0.030	1.03	0.005	-0.058	0.0359	0.083
0.80	0.104	0.014	0.0182	0.017	1.03	0.115	0.040	0.0360	0.067
0.80	0.210	0.091	0.0203	0.005	1.03	0.225	0.136	0.0397	0.044
0.80	0.318	0.169	0.0241	-0.008	1.03	0.334	0.226	0.0459	0.024
0.80	0.425	0.246	0.0290	-0.017	1.03	0.444	0.326	0.0559	0.001
0.80	0.533	0.327	0.0369	-0.023	1.03	0.553	0.423	0.0695	-0.021
0.80	0.642	0.409	0.0496	-0.029	1.03	0.664	0.518	0.0871	-0.041
0.80	0.859	0.574	0.0833	-0.044	1.03	0.883	0.696	0.1323	-0.075
0.80	1.069	0.705	0.1406	-0.084	1.03	1.103	0.864	0.1890	-0.106
0.80	1.280	0.811	0.1920	-0.099					
0.80	1.490	0.882	0.2424	-0.098					
0.85	-0.163	-0.170	0.0252	0.053	1.05	-0.159	-0.201	0.0434	0.123
0.85	-0.109	-0.130	0.0232	0.047	1.05	-0.104	-0.152	0.0404	0.111
0.85	-0.002	-0.050	0.0203	0.039	1.05	0.007	-0.057	0.0380	0.095
0.85	0.103	0.015	0.0195	0.020	1.05	0.116	0.042	0.0378	0.072
0.85	0.211	0.094	0.0218	0.007	1.05	0.225	0.133	0.0413	0.051
0.85	0.318	0.173	0.0253	-0.007	1.05	0.335	0.225	0.0481	0.031
0.85	0.427	0.256	0.0304	-0.016	1.05	0.445	0.319	0.0576	0.012
0.85	0.535	0.340	0.0401	-0.022	1.05	0.554	0.413	0.0704	-0.010
0.85	0.644	0.427	0.0536	-0.029	1.05	0.664	0.507	0.0876	-0.030
0.85	0.862	0.603	0.0928	-0.049	1.05	0.883	0.685	0.1317	-0.065
0.85	1.070	0.721	0.1453	-0.095	1.05	1.102	0.849	0.1874	-0.096
0.85	1.280	0.826	0.1970	-0.114					
0.85	1.490	0.899	0.2483	-0.113					
0.90	-0.164	-0.179	0.0268	0.058	1.10	-0.161	-0.204	0.0471	0.110
0.90	-0.110	-0.137	0.0242	0.051	1.10	-0.107	-0.156	0.0441	0.098
0.90	-0.002	-0.055	0.0212	0.034	1.10	0.003	-0.061	0.0405	0.075
0.90	0.104	0.018	0.0207	0.023	1.10	0.112	0.034	0.0401	0.052
0.90	0.212	0.093	0.0226	0.011	1.10	0.222	0.129	0.0439	0.031
0.90	0.321	0.177	0.0269	-0.002	1.10	0.332	0.222	0.0503	0.012
0.90	0.430	0.267	0.0328	-0.013	1.10	0.443	0.309	0.0600	0.003
0.90	0.539	0.359	0.0440	-0.024	1.10	0.553	0.406	0.0731	-0.015
0.90	0.650	0.456	0.0602	-0.037	1.10	0.664	0.504	0.0905	-0.035
0.90	0.869	0.653	0.1048	-0.069	1.10	0.883	0.685	0.1339	-0.076
					1.10	1.102	0.852	0.1889	-0.113
0.95	-0.165	-0.186	0.0310	0.064	1.20	-0.158	-0.183	0.0474	0.114
0.95	-0.110	-0.140	0.0285	0.057	1.20	-0.105	-0.139	0.0442	0.098
0.95	-0.002	-0.064	0.0254	0.048	1.20	0.004	-0.049	0.0408	0.068
0.95	0.105	0.008	0.0238	0.041	1.20	0.111	0.039	0.0407	0.041
0.95	0.215	0.087	0.0261	0.030	1.20	0.221	0.131	0.0442	0.014
0.95	0.324	0.171	0.0307	0.018	1.20	0.330	0.221	0.0508	-0.011
0.95	0.435	0.273	0.0392	0.002	1.20	0.439	0.311	0.0605	-0.036
0.95	0.544	0.374	0.0520	-0.021	1.20	0.548	0.400	0.0734	-0.056
0.95	0.655	0.496	0.0720	-0.050	1.20	0.658	0.488	0.0891	-0.074
0.95	0.876	0.700	0.1200	-0.095	1.20	0.876	0.659	0.1299	-0.121
0.95	1.094	0.883	0.1804	-0.132	1.20	1.092	0.823	0.1796	-0.175
0.95	1.312	1.024	0.2455	-0.146					
0.98	-0.163	-0.197	0.0365	0.087	1.30	-0.161	-0.175	0.0456	0.090
0.98	-0.108	-0.147	0.0335	0.078	1.30	-0.108	-0.136	0.0427	0.076
0.98	0.002	-0.057	0.0312	0.066	1.30	0.000	-0.056	0.0391	0.050
0.98	0.112	0.034	0.0302	0.050	1.30	0.107	0.025	0.0386	0.024
0.98	0.222	0.131	0.0340	0.033	1.30	0.215	0.107	0.0414	-0.001
0.98	0.331	0.225	0.0397	0.014	1.30	0.324	0.190	0.0472	-0.026
0.98	0.443	0.335	0.0499	-0.005	1.30	0.432	0.270	0.0555	-0.048
0.98	0.553	0.432	0.0645	-0.025	1.30	0.540	0.350	0.0670	-0.069
0.98	0.663	0.530	0.0827	-0.047	1.30	0.650	0.433	0.0817	-0.090
0.98	0.887	0.751	0.1340	-0.082	1.30	0.869	0.597	0.1209	-0.129
0.98	1.100	0.892	0.1886	-0.128	1.30	1.088	0.753	0.1710	-0.160
					1.30	1.308	0.899	0.2313	-0.176
1.00	-0.161	-0.194	0.0397	0.101	1.40	-0.160	-0.155	0.0450	0.083
1.00	-0.113	-0.150	0.0370	0.092	1.40	-0.107	-0.116	0.0422	0.070
1.00	0.004	-0.057	0.0341	0.077	1.40	0.001	-0.042	0.0386	0.044
1.00	0.112	0.033	0.0335	0.060	1.40	0.107	0.033	0.0388	0.018
1.00	0.223	0.132	0.0372	0.040	1.40	0.215	0.110	0.0412	-0.008
1.00	0.333	0.227	0.0438	0.021	1.40	0.323	0.187	0.0465	-0.035
1.00	0.443	0.328	0.0533	0.001	1.40	0.431	0.265	0.0546	-0.060
1.00	0.553	0.429	0.0676	-0.020	1.40	0.538	0.341	0.0655	-0.083
1.00	0.663	0.529	0.0858	-0.041	1.40	0.647	0.417	0.0794	-0.104
1.00	0.882	0.714	0.1323	-0.082					
1.00	1.101	0.865	0.1904	-0.118					

TABLE II.- STATIC LONGITUDINAL AERODYNAMIC DATA FOR THE BASIC MODEL AND ITS VARIOUS CONFIGURATIONS - Continued

(f) Configuration S_1P_T

M	α	C_L	C_D	C_m	M	α	C_L	C_D	C_m
0.80	-0.164	-0.181	0.0255	0.050	1.03	-0.162	-0.220	0.0493	0.117
0.80	-0.110	-0.137	0.0229	0.044	1.03	-0.107	-0.162	0.0453	0.101
0.80	-0.003	-0.050	0.0202	0.027	1.03	0.005	-0.053	0.0421	0.079
0.80	0.103	0.020	0.0193	0.015	1.03	0.116	0.063	0.0424	0.050
0.80	0.211	0.108	0.0217	0.000	1.03	0.226	0.169	0.0472	0.025
0.80	0.319	0.190	0.0254	-0.012	1.03	0.336	0.269	0.0552	0.002
0.80	0.428	0.278	0.0316	-0.025	1.03	0.445	0.368	0.0665	-0.022
0.80	0.537	0.364	0.0413	-0.032	1.03	0.554	0.467	0.0815	-0.046
0.80	0.645	0.448	0.0549	-0.041	1.03	0.664	0.565	0.1006	-0.070
0.80	0.859	0.599	0.0944	-0.067	1.03	0.882	0.748	0.1489	-0.113
0.80	1.066	0.704	0.1432	-0.109	1.03	1.101	0.913	0.2085	-0.148
0.80	1.274	0.789	0.1903	-0.134					
0.85	-0.165	-0.188	0.0263	0.055	1.05	-0.158	-0.203	0.0494	0.188
0.85	-0.111	-0.144	0.0239	0.047	1.05	-0.104	-0.154	0.0460	0.110
0.85	-0.003	-0.055	0.0211	0.029	1.05	0.006	-0.047	0.0429	0.082
0.85	0.103	0.018	0.0199	0.017	1.05	0.115	0.061	0.0433	0.054
0.85	0.212	0.105	0.0225	0.002	1.05	0.226	0.170	0.0477	0.024
0.85	0.321	0.199	0.0263	-0.013	1.05	0.336	0.270	0.0560	0.002
0.85	0.431	0.288	0.0338	-0.025	1.05	0.446	0.368	0.0669	-0.020
0.85	0.540	0.380	0.0446	-0.032	1.05	0.555	0.466	0.0817	-0.043
0.85	0.650	0.476	0.0613	-0.045	1.05	0.665	0.555	0.0998	-0.063
0.85	0.867	0.640	0.1018	-0.072	1.05	0.884	0.736	0.1477	-0.107
0.85	1.069	0.718	0.1478	-0.122	1.05	1.101	0.904	0.2074	-0.143
0.85	1.276	0.807	0.1968	-0.153					
0.90	-0.166	-0.197	0.0283	0.059	1.10	-0.163	-0.230	0.0521	0.122
0.90	-0.112	-0.146	0.0250	0.051	1.10	-0.108	-0.181	0.0490	0.111
0.90	-0.003	-0.058	0.0221	0.033	1.10	0.002	-0.075	0.0443	0.082
0.90	0.104	0.015	0.0210	0.021	1.10	0.112	0.031	0.0435	0.053
0.90	0.214	0.110	0.0236	0.007	1.10	0.223	0.141	0.0473	0.022
0.90	0.324	0.202	0.0286	-0.007	1.10	0.333	0.239	0.0546	0.002
0.90	0.434	0.302	0.0366	-0.022	1.10	0.443	0.334	0.0656	-0.018
0.90	0.544	0.409	0.0504	-0.039	1.10	0.554	0.435	0.0806	-0.036
0.90	0.654	0.510	0.0683	-0.057	1.10	0.665	0.541	0.0993	-0.064
0.90	0.868	0.660	0.1100	-0.094	1.10	0.883	0.725	0.1457	-0.112
0.90	1.082	0.791	0.1593	-0.121	1.10	1.101	0.895	0.2038	-0.156
0.95	-0.166	-0.205	0.0333	0.069	1.20	-0.160	-0.193	0.0516	0.115
0.95	-0.112	-0.154	0.0301	0.058	1.20	-0.106	-0.147	0.0483	0.099
0.95	-0.003	-0.071	0.0266	0.047	1.20	0.003	-0.052	0.0447	0.066
0.95	0.105		0.0256	0.043	1.20	0.111	0.044	0.0444	0.034
0.95	0.217	0.101	0.0287	0.030	1.20	0.220	0.139	0.0480	0.004
0.95	0.327	0.200	0.0344	0.010	1.20	0.330	0.235	0.0550	-0.027
0.95	0.438	0.314	0.0450	-0.012	1.20	0.440	0.329	0.0658	-0.053
0.95	0.548	0.427	0.0599	-0.041	1.20	0.549	0.422	0.0791	-0.077
0.95	0.660	0.558	0.0828	-0.075	1.20	0.659	0.518	0.0961	-0.100
0.95	0.877	0.743	0.1311	-0.121	1.20	0.875	0.698	0.1392	-0.172
0.95	1.093	0.890	0.1874	-0.149	1.20	1.094	0.859	0.1946	-0.206
0.95	1.305	0.996	0.2449	-0.168					
0.98	-0.164	-0.211	0.0405	0.094	1.30	-0.163	-0.183	0.0498	0.087
0.98	-0.109	-0.161	0.0386	0.086	1.30	-0.110	-0.143	0.0466	0.074
0.98	0.002	-0.060	0.0346	0.065	1.30	-0.001	-0.057	0.0427	0.045
0.98	0.112	0.053	0.0340	0.041	1.30	0.106	0.028	0.0418	0.016
0.98	0.222	0.155	0.0382	0.021	1.30	0.215	0.115	0.0449	-0.013
0.98	0.333	0.255	0.0450	0.000	1.30	0.323	0.201	0.0507	-0.041
0.98	0.444	0.366	0.0577	-0.023	1.30	0.432	0.285	0.0601	-0.067
0.98	0.553	0.469	0.0727	-0.046	1.30	0.540	0.371	0.0723	-0.093
0.98	0.664	0.575	0.0931	-0.072	1.30	0.649	0.452	0.0871	-0.115
0.98	0.881	0.761	0.1423	-0.118	1.30	0.867	0.620	0.1269	-0.162
0.98	1.099	0.938	0.2030	-0.159	1.30	1.086	0.784	0.1791	-0.201
1.00	-0.162	-0.215	0.0463	0.109	1.40	-0.160	-0.163	0.0491	0.089
1.00	-0.108	-0.165	0.0426	0.098	1.40	-0.107	-0.125	0.0461	0.074
1.00	0.003	-0.063	0.0392	0.077	1.40	0.000	-0.045	0.0427	0.045
1.00	0.113	0.052	0.0390	0.050	1.40	0.108	0.032	0.0421	0.016
1.00	0.224	0.153	0.0439	0.028	1.40	0.214	0.116	0.0448	-0.014
1.00	0.334	0.257	0.0507	0.005	1.40	0.322	0.197	0.0503	-0.042
1.00	0.445	0.365	0.0617	-0.020	1.40	0.430	0.274	0.0586	-0.069
1.00	0.555	0.475	0.0782	-0.046	1.40	0.536	0.356	0.0703	-0.096
1.00	0.665	0.573	0.0983	-0.068	1.40	0.644	0.433	0.0843	-0.120
1.00	0.885	0.761	0.1480	-0.113					
1.00	1.102	0.936	0.2092	-0.155					

TABLE II.- STATIC LONGITUDINAL AERODYNAMIC DATA FOR THE BASIC MODEL AND ITS VARIOUS CONFIGURATIONS - Continued

(g) Configuration S_1M_4T

M	α	C_L	C_D	C_m	M	α	C_L	C_D	C_m
0.80	-0.166	-0.205	0.0287	0.054	1.03	-0.163	-0.232	0.0558	0.119
0.80	-0.112	-0.153	0.0257	0.046	1.03	-0.108	-0.172	0.0528	0.106
0.80	-0.003	-0.054	0.0225	0.028	1.03	0.005	-0.050	0.0482	0.079
0.80	0.104	0.031	0.0217	0.013	1.03	0.118	0.081	0.0487	0.044
0.80	0.214	0.129	0.0246	-0.002	1.03	0.228	0.198	0.0547	0.014
0.80	0.323	0.230	0.0295	-0.020	1.03	0.339	0.307	0.0638	-0.018
0.80	0.433	0.324	0.0371	-0.031	1.03	0.450	0.417	0.0768	-0.040
0.80	0.542	0.415	0.0487	-0.037	1.03	0.560	0.525	0.0941	-0.066
0.80	0.651	0.506	0.0652	-0.050	1.03	0.671	0.630	0.1160	-0.093
0.80	0.863	0.650	0.1063	-0.077	1.03	0.892	0.819	0.1687	-0.136
0.80	1.070	0.751	0.1577	-0.127	1.03	1.110	0.999	0.2340	-0.177
0.80	1.275	0.823	0.2042	-0.151					
0.80	1.483	0.890	0.2538	-0.160					
0.85	-0.168	-0.214	0.0299	0.057	1.05	-0.161	-0.226	0.0561	0.131
0.85	-0.113	-0.161	0.0266	0.049	1.05	-0.104	-0.163	0.0523	0.117
0.85	-0.003	-0.059	0.0235	0.030	1.05	0.006	-0.044	0.0487	0.082
0.85	0.106	0.031	0.0227	0.015	1.05	0.118	0.084	0.0493	0.047
0.85	0.215	0.136	0.0254	-0.002	1.05	0.229	0.197	0.0556	0.019
0.85	0.325	0.239	0.0314	-0.018	1.05	0.340	0.307	0.0649	-0.009
0.85	0.436	0.336	0.0398	-0.030	1.05	0.451	0.415	0.0773	-0.035
0.85	0.546	0.439	0.0538	-0.042	1.05	0.562	0.515	0.0938	-0.060
0.85	0.655	0.530	0.0710	-0.054	1.05	0.671	0.614	0.1143	-0.084
0.85	0.870	0.677	0.1125	-0.082	1.05	0.892	0.809	0.1673	-0.132
					1.05	1.111	0.983	0.2319	-0.173
0.90	-0.169	-0.230	0.0325	0.066	1.10	-0.164	-0.247	0.0591	0.138
0.90	-0.114	-0.169	0.0288	0.054	1.10	-0.108	-0.187	0.0547	0.112
0.90	-0.003	-0.065	0.0255	0.037	1.10	0.002	-0.070	0.0499	0.076
0.90	0.105	0.029	0.0242	0.020	1.10	0.112	0.051	0.0495	0.039
0.90	0.217	0.138	0.0276	0.005	1.10	0.224	0.168	0.0545	0.006
0.90	0.329	0.255	0.0345	-0.017	1.10	0.335	0.278	0.0637	-0.018
0.90	0.439	0.361	0.0450	-0.032	1.10	0.447	0.384	0.0761	-0.041
0.90	0.549	0.468	0.0606	-0.051	1.10	0.558	0.502	0.0937	-0.070
0.90	0.658	0.558	0.0791	-0.067	1.10	0.669	0.609	0.1145	-0.095
0.90	0.872	0.713	0.1239	-0.103	1.10	0.888	0.804	0.1656	-0.149
0.90	1.077	0.796	0.1703	-0.150	1.10	1.107	0.975	0.2275	-0.191
0.90	1.278	0.859	0.2193	-0.199					
0.90	1.489	0.947	0.2756	-0.210					
0.95	-0.169	-0.246	0.0406	0.084	1.20	-0.161	-0.206	0.0581	0.117
0.95	-0.114	-0.183	0.0369	0.071	1.20	-0.107	-0.155	0.0546	0.100
0.95	-0.002	-0.074	0.0317	0.052	1.20	0.003	-0.054	0.0506	0.065
0.95	0.110	0.036	0.0305	0.036	1.20	0.112	0.053	0.0503	0.029
0.95	0.222	0.154	0.0343	0.012	1.20	0.221	0.157	0.0546	-0.006
0.95	0.333	0.286	0.0438	-0.019	1.20	0.332	0.262	0.0626	-0.040
0.95	0.446	0.413	0.0580	-0.046	1.20	0.442	0.359	0.0744	-0.069
0.95	0.556	0.532	0.0761	-0.074	1.20	0.551	0.460	0.0896	-0.097
0.95	0.664	0.614	0.0956	-0.094	1.20	0.662	0.561	0.1081	-0.125
0.95	0.880	0.777	0.1432	-0.133	1.20	0.878	0.755	0.1547	-0.202
0.95	1.093	0.894	0.1956	-0.159					
0.95	1.302	0.988	0.2508	-0.182					
0.95	1.500	1.001	0.2966	-0.222					
0.98	-0.165	-0.226	0.0486	0.101	1.30	-0.164	-0.194	0.0555	0.092
0.98	-0.109	-0.168	0.0449	0.088	1.30	-0.110	-0.148	0.0521	0.076
0.98	0.002	-0.061	0.0409	0.061	1.30	-0.002	-0.060	0.0479	0.045
0.98	0.113	0.077	0.0405	0.030	1.30	0.106	0.030	0.0471	0.013
0.98	0.225	0.194	0.0457	0.005	1.30	0.215	0.125	0.0502	-0.020
0.98	0.337	0.313	0.0551	-0.023	1.30	0.324	0.218	0.0570	-0.052
0.98	0.449	0.432	0.0687	-0.050	1.30	0.433	0.309	0.0670	-0.081
0.98	0.559	0.542	0.0879	-0.073	1.30	0.541	0.398	0.0800	-0.109
0.98	0.670	0.651	0.1100	-0.099	1.30	0.650	0.488	0.0965	-0.137
0.98	0.889	0.851	0.1657	-0.149	1.30	0.869	0.668	0.1395	-0.189
0.98	1.106	1.018	0.2283	-0.189					
1.00	-0.163	-0.227	0.0529	0.113	1.40	-0.160	-0.173	0.0553	0.097
1.00	-0.108	-0.170	0.0491	0.100	1.40	-0.107	-0.133	0.0520	0.082
1.00	0.004	-0.054	0.0458	0.074	1.40	0.001	-0.051	0.0481	0.051
1.00	0.115	0.068	0.0456	0.044	1.40	0.108	0.035	0.0473	0.020
1.00	0.226	0.187	0.0504	0.014	1.40	0.216	0.124	0.0500	-0.012
1.00	0.338	0.301	0.0601	-0.013	1.40	0.324	0.206	0.0559	-0.041
1.00	0.450	0.424	0.0737	-0.043	1.40	0.432	0.290	0.0649	-0.071
1.00	0.560	0.536	0.0919	-0.069	1.40	0.540	0.375	0.0768	-0.100
1.00	0.671	0.645	0.1145	-0.095	1.39	0.648	0.459	0.0918	-0.128
1.00	0.892	0.847	0.1697	-0.145					
1.00	1.110	1.025	0.2351	-0.186					

TABLE II.- STATIC LONGITUDINAL AERODYNAMIC DATA FOR THE BASIC MODEL AND ITS VARIOUS CONFIGURATIONS - Continued

(h) Configuration S_1M_4F

M	α	C_L	C_D	C_m
0.80	-0.162	-0.167	0.0288	0.055
0.80	-0.109	-0.126	0.0269	0.049
0.80	-0.002	-0.050	0.0244	0.032
0.80	0.104	0.018	0.0230	0.021
0.80	0.212	0.092	0.0257	0.008
0.80	0.318	0.175	0.0290	-0.008
0.80	0.426	0.255	0.0344	-0.017
0.80	0.535	0.343	0.0429	-0.022
0.80	0.643	0.422	0.0555	-0.032
0.80	0.858	0.586	0.0932	-0.051
0.80	1.069	0.716	0.1483	-0.094
0.80	1.278	0.814	0.1996	-0.112
0.80	1.487	0.886	0.2516	-0.119
0.85	-0.162	-0.170	0.0292	0.059
0.85	-0.109	-0.125	0.0270	0.049
0.85	-0.002	-0.049	0.0245	0.033
0.85	0.094	0.019	0.0239	0.022
0.85	0.212	0.097	0.0259	0.008
0.85	0.320	0.179	0.0299	-0.005
0.85	0.429	0.263	0.0350	-0.015
0.85	0.537	0.348	0.0451	-0.023
0.85	0.647	0.440	0.0598	-0.031
0.85	0.865	0.622	0.1005	-0.054
0.85	1.073	0.735	0.1539	-0.106
0.85	1.282	0.839	0.2076	-0.131
0.85	1.492	0.909	0.2598	-0.134
0.90	-0.162	-0.175	0.0322	0.066
0.90	-0.109	-0.133	0.0296	0.058
0.90	-0.001	-0.052	0.0269	0.040
0.90	0.104	0.011	0.0260	0.029
0.90	0.213	0.094	0.0277	0.015
0.90	0.321	0.180	0.0315	0.000
0.90	0.431	0.268	0.0376	-0.011
0.90	0.541	0.361	0.0498	-0.023
0.90	0.650	0.462	0.0660	-0.038
0.90	0.869	0.660	0.1109	-0.074
0.95	-0.162	-0.179	0.0390	0.079
0.95	-0.108	-0.134	0.0357	0.068
0.95	0.000	-0.058	0.0319	0.054
0.95	0.109	0.020	0.0316	0.045
0.95	0.217	0.101	0.0341	0.033
0.95	0.326	0.194	0.0398	0.018
0.95	0.435	0.289	0.0472	-0.003
0.95	0.547	0.401	0.0628	-0.025
0.95	0.656	0.511	0.0817	-0.055
0.95	0.873	0.705	0.1285	-0.102
0.95	1.092	0.885	0.1883	-0.137
0.98	-0.159	-0.171	0.0446	0.090
0.98	-0.105	-0.129	0.0432	0.087
0.98	0.005	-0.042	0.0402	0.070
0.98	0.114	0.054	0.0405	0.052
0.98	0.223	0.144	0.0448	0.035
0.98	0.332	0.240	0.0504	0.014
0.98	0.442	0.334	0.0596	+0.003
0.98	0.551	0.435	0.0740	-0.025
0.98	0.661	0.534	0.0938	-0.047
0.98	0.879	0.785	0.1410	-0.094
1.00	-0.158	-0.173	0.0494	0.101
1.00	-0.103	-0.129	0.0475	0.097
1.00	0.006	-0.045	0.0457	0.085
1.00	0.116	0.049	0.0458	0.066
1.00	0.225	0.142	0.0495	0.043
1.00	0.335	0.239	0.0562	0.022
1.00	0.445	0.338	0.0658	0.001
1.00	0.554	0.438	0.0806	-0.023
1.00	0.664	0.539	0.0993	-0.047
1.00	0.882	0.726	0.1465	-0.091
1.00	1.101	0.902	0.2069	-0.132
1.03	-0.157	-0.178	0.0528	0.110
1.03	-0.103	-0.129	0.0496	0.100
1.03	0.010	-0.020	0.0477	0.083
1.03	0.118	0.077	0.0491	0.063
1.03	0.228	0.171	0.0541	0.038
1.03	0.336	0.260	0.0613	0.017
1.03	0.446	0.355	0.0714	-0.007
1.03	0.554	0.444	0.0852	-0.027
1.03	0.663	0.534	0.1027	-0.050
1.03	0.881	0.714	0.1481	-0.091
1.03	1.099	0.880	0.2058	-0.125
1.05	-0.155	-0.169	0.0541	0.118
1.05	-0.100	-0.117	0.0515	0.106
1.05	0.010	-0.025	0.0498	0.087
1.05	0.119	0.077	0.0503	0.059
1.05	0.229	0.169	0.0552	0.037
1.05	0.338	0.259	0.0630	0.017
1.05	0.448	0.355	0.0727	-0.005
1.05	0.556	0.445	0.0866	-0.024
1.05	0.666	0.533	0.1035	-0.043
1.05	0.883	0.702	0.1472	-0.083
1.05	1.102	0.868	0.2046	-0.119
1.10	-0.159	-0.182	0.0571	0.107
1.10	-0.105	-0.135	0.0545	0.094
1.10	0.005	-0.038	0.0512	0.069
1.10	0.114	0.060	0.0517	0.046
1.10	0.225	0.150	0.0556	0.028
1.10	0.334	0.242	0.0627	0.009
1.10	0.443	0.330	0.0726	-0.011
1.10	0.553	0.423	0.0858	-0.024
1.10	0.664	0.517	0.1027	-0.042
1.10	0.882	0.697	0.1469	-0.087
1.10	1.100	0.865	0.2029	-0.128
1.20	-0.157	-0.152	0.0563	0.090
1.20	-0.104	-0.105	0.0536	0.076
1.20	0.005	-0.014	0.0511	0.046
1.20	0.113	0.076	0.0522	0.019
1.20	0.221	0.166	0.0564	-0.010
1.20	0.330	0.258	0.0636	-0.032
1.20	0.439	0.339	0.0740	-0.056
1.20	0.548	0.429	0.0873	-0.077
1.20	0.658	0.514	0.1033	-0.096
1.20	0.874	0.686	0.1440	-0.151
1.20	1.093	0.849	0.1982	-0.185
1.30	-0.163	-0.158	0.0546	0.064
1.30	-0.109	-0.115	0.0519	0.050
1.30	-0.002	-0.033	0.0490	0.022
1.30	0.107	0.049	0.0492	-0.004
1.30	0.214	0.133	0.0528	-0.029
1.30	0.323	0.213	0.0589	-0.053
1.30	0.432	0.298	0.0684	-0.076
1.30	0.540	0.380	0.0808	-0.097
1.30	0.650	0.462	0.0958	-0.117
1.30	0.869	0.622	0.1357	-0.152
1.30	1.088	0.777	0.1861	-0.183
1.40	-0.160	-0.143	0.0541	0.070
1.40	-0.107	-0.105	0.0516	0.055
1.40	0.000	-0.030	0.0483	0.028
1.40	0.106	0.047	0.0483	0.000
1.40	0.215	0.127	0.0510	-0.028
1.40	0.321	0.206	0.0568	-0.055
1.40	0.429	0.285	0.0657	-0.081
1.40	0.536	0.362	0.0772	-0.105
1.40	0.645	0.442	0.0923	-0.127

TABLE II.- STATIC LONGITUDINAL AERODYNAMIC DATA FOR THE BASIC MODEL AND ITS VARIOUS CONFIGURATIONS - Continued

(i) Configuration S_1M_{2F}

M	α	C_L	C_D	C_m	M	α	C_L	C_D	C_m
0.80	-0.163	-0.168	0.0260	0.048	1.03	-0.161	-0.211	0.0503	0.112
0.80	-0.110	-0.128	0.0239	0.040	1.03	-0.107	-0.161	0.0470	0.102
0.80	-0.003	-0.050	0.0214	0.023	1.03	0.004	-0.057	0.0433	0.078
0.80	0.102	0.015	0.0203	0.013	1.03	0.114	0.049	0.0435	0.054
0.80	0.211	0.093	0.0223	0.001	1.03	0.225	0.146	0.0479	0.030
0.80	0.317	0.171	0.0260	-0.015	1.03	0.333	0.238	0.0547	0.008
0.80	0.425	0.250	0.0310	-0.024	1.03	0.442	0.331	0.0638	-0.013
0.80	0.533	0.332	0.0388	-0.031	1.03	0.551	0.426	0.0771	-0.033
0.80	0.642	0.416	0.0512	-0.038	1.03	0.661	0.514	0.0940	-0.053
0.80	0.859	0.579	0.0880	-0.055	1.03	0.879	0.694	0.1390	-0.093
0.80	1.067	0.703	0.1418	-0.098	1.03	1.097	0.859	0.1949	-0.124
0.80	1.277	0.801	0.1920	-0.116					
0.85	-0.164	-0.173	0.0271	0.049	1.05	-0.159	-0.198	0.0505	0.116
0.85	-0.110	-0.131	0.0247	0.042	1.05	-0.104	-0.146	0.0479	0.105
0.85	0.005	-0.051	0.0218	0.024	1.05	0.005	-0.054	0.0448	0.079
0.85	0.102	0.013	0.0212	0.014	1.05	0.113	0.046	0.0449	0.054
0.85	0.210	0.093	0.0231	0.001	1.05	0.223	0.144	0.0466	0.028
0.85	0.318	0.176	0.0267	-0.014	1.05	0.332	0.233	0.0557	0.009
0.85	0.428	0.261	0.0321	-0.023	1.05	0.442	0.327	0.0646	-0.011
0.85	0.536	0.345	0.0414	-0.030	1.05	0.551	0.419	0.0777	-0.028
0.85	0.646	0.435	0.0556	-0.039	1.05	0.660	0.509	0.0941	-0.048
0.85	0.864	0.615	0.0958	-0.061	1.05	0.879	0.680	0.1370	-0.085
0.85	1.071	0.721	0.1470	-0.110	1.05	1.097	0.845	0.1988	-0.116
0.85	1.280	0.817	0.1976	-0.133					
0.90	-0.164	-0.180	0.0293	0.056	1.10	-0.162	-0.211	0.0529	0.110
0.90	-0.110	-0.136	0.0268	0.048	1.10	-0.108	-0.160	0.0493	0.097
0.90	-0.003	-0.056	0.0240	0.032	1.10	0.002	-0.073	0.0460	0.076
0.90	0.104	0.006	0.0228	0.020	1.10	0.111	0.023	0.0448	0.051
0.90	0.211	0.089	0.0244	0.007	1.10	0.221	0.119	0.0483	0.030
0.90	0.320	0.175	0.0286	-0.008	1.10	0.330	0.207	0.0547	0.013
0.90	0.429	0.265	0.0349	-0.019	1.10	0.440	0.297	0.0636	-0.007
0.90	0.538	0.359	0.0458	-0.032	1.10	0.550	0.387	0.0759	-0.020
0.90	0.648	0.460	0.0622	-0.048	1.10	0.661	0.485	0.0928	-0.039
0.90	0.869	0.663	0.1085	-0.086	1.10	0.880	0.671	0.1363	-0.084
					1.10	1.098	0.841	0.1918	-0.123
0.95	-0.165	-0.181	0.0338	0.058	1.20	-0.160	-0.187	0.0530	0.105
0.95	-0.111	-0.139	0.0314	0.051	1.20	-0.106	-0.141	0.0499	0.089
0.95	-0.003	-0.066	0.0286	0.043	1.20	0.002	-0.055	0.0465	0.060
0.95	0.105	-0.009	0.0278	0.042	1.20	0.110	0.036	0.0462	0.031
0.95	0.212	0.070	0.0287	0.030	1.20	0.218	0.121	0.0491	0.006
0.95	0.321	0.155	0.0334	0.016	1.20	0.326	0.211	0.0554	-0.021
0.95	0.432	0.258	0.0414	-0.003	1.20	0.435	0.298	0.0648	-0.045
0.95	0.541	0.364	0.0540	-0.028	1.20	0.544	0.385	0.0768	-0.067
0.95	0.652	0.485	0.0742	-0.057	1.20	0.653	0.472	0.0923	-0.088
0.95	0.873	0.699	0.1245	-0.107	1.20	0.872	0.645	0.1323	-0.131
0.95	1.090	0.864	0.1804	-0.140	1.20	1.087	0.810	0.1835	-0.186
0.98	-0.163	-0.194	0.0423	0.086	1.30	-0.165	-0.187	0.0517	0.078
0.98	-0.109	-0.149	0.0388	0.076	1.30	-0.112	-0.146	0.0487	0.065
0.98	0.001	-0.061	0.0356	0.060	1.30	-0.004	-0.064	0.0446	0.038
0.98	0.110	0.024	0.0340	0.046	1.30	0.105	0.016	0.0439	0.013
0.98	0.219	0.121	0.0381	0.027	1.30	0.218	0.099	0.0465	-0.012
0.98	0.328	0.214	0.0446	0.009	1.30	0.320	0.181	0.0518	-0.035
0.98	0.439	0.312	0.0537	-0.010	1.30	0.428	0.259	0.0603	-0.060
0.98	0.549	0.416	0.0686	-0.031	1.30	0.536	0.340	0.0711	-0.082
0.98	0.658	0.517	0.0862	-0.055	1.30	0.645	0.422	0.0853	-0.103
0.98	0.877	0.708	0.1335	-0.099	1.30	0.864	0.584	0.1289	-0.143
0.98	1.094	0.876	0.1901	-0.137	1.30	1.082	0.739	0.1719	-0.176
0.98	1.312	1.039	0.2606	-0.167					
1.00	-0.154	-0.206	0.0465	0.101	1.40	-0.163	-0.169	0.0461	0.079
1.00	-0.108	-0.160	0.0441	0.092	1.40	-0.110	-0.132	0.0486	0.065
1.00	0.002	-0.070	0.0406	0.076	1.40	-0.003	-0.056	0.0445	0.037
1.00	0.111	0.029	0.0402	0.055	1.40	0.104	0.018	0.0437	0.012
1.00	0.221	0.121	0.0435	0.038	1.40	0.211	0.097	0.0457	-0.015
1.00	0.330	0.220	0.0496	0.014	1.40	0.319	0.174	0.0506	-0.041
1.00	0.440	0.313	0.0590	-0.004	1.40	0.427	0.250	0.0585	-0.065
1.00	0.551	0.416	0.0730	-0.028	1.40	0.534	0.328	0.0694	-0.089
1.00	0.660	0.517	0.0912	-0.051	1.40	0.643	0.405	0.0831	-0.109
1.00	0.878	0.702	0.1364	-0.092					
1.00	1.096	0.877	0.1949	-0.131					

TABLE II.- STATIC LONGITUDINAL AERODYNAMIC DATA FOR THE BASIC MODEL AND ITS VARIOUS CONFIGURATIONS - Continued

(j) Configuration S_1M_2T

M	α	C_L	C_D	C_m
0.80	-0.166	-0.200	0.0262	0.052
0.80	-0.112	-0.151	0.0234	0.044
0.80	-0.003	-0.053	0.0204	0.035
0.80	0.105	0.028	0.0192	0.013
0.80	0.214	0.124	0.0218	0.000
0.80	0.322	0.223	0.0265	-0.016
0.80	0.432	0.321	0.0341	-0.027
0.80	0.542	0.418	0.0461	-0.036
0.80	0.650	0.506	0.0622	-0.047
0.85	-0.167	-0.206	0.0271	-0.054
0.85	-0.113	-0.154	0.0243	0.045
0.85	-0.003	-0.057	0.0213	0.028
0.85	0.105	0.027	0.0202	0.016
0.85	0.215	0.127	0.0228	0.002
0.85	0.325	0.233	0.0280	-0.014
0.85	0.436	0.337	0.0367	-0.025
0.85	0.545	0.432	0.0506	-0.038
0.85	0.654	0.521	0.0682	-0.052
0.85	0.869	0.669	0.1100	-0.080
0.90	-0.169	-0.221	0.0292	0.061
0.90	-0.113	-0.160	0.0259	0.050
0.90	-0.003	-0.059	0.0227	0.033
0.90	0.105	0.026	0.0214	0.021
0.90	0.218	0.136	0.0244	0.007
0.90	0.328	0.242	0.0306	-0.011
0.90	0.440	0.358	0.0412	-0.026
0.90	0.550	0.471	0.0580	-0.046
0.90	0.658	0.549	0.0761	-0.064
0.90	0.869	0.680	0.1169	-0.099
0.95	-0.169	-0.226	0.0361	0.070
0.95	-0.114	-0.173	0.0323	0.060
0.95	-0.002	-0.066	0.0291	0.049
0.95	0.108	0.021	0.0274	0.042
0.95	0.220	0.135	0.0325	0.026
0.95	0.330	0.237	0.0388	0.003
0.95	0.443	0.365	0.0519	-0.023
0.95	0.554	0.491	0.0701	-0.054
0.95	0.664	0.596	0.0916	-0.082
0.98	-0.167	-0.235	0.0436	0.095
0.98	-0.112	-0.180	0.0410	0.082
0.98	0.002	-0.054	0.0372	0.062
0.98	0.113	0.073	0.0366	0.033
0.98	0.225	0.191	0.0428	0.010
0.98	0.337	0.304	0.0520	-0.015
0.98	0.449	0.428	0.0652	-0.038
0.98	0.558	0.532	0.0838	-0.065
0.98	0.669	0.637	0.1046	-0.089
0.98	0.887	0.818	0.1555	-0.129
0.98	1.101	0.945	0.2098	-0.155
1.00	-0.165	-0.238	0.0495	0.126
1.00	-0.109	-0.179	0.0461	0.099
1.00	0.003	-0.059	0.0417	0.075
1.00	0.115	0.070	0.0422	0.046
1.00	0.226	0.183	0.0473	0.020
1.00	0.338	0.299	0.0568	-0.008
1.00	0.450	0.420	0.0701	-0.036
1.00	0.560	0.528	0.0879	-0.060
1.00	0.670	0.633	0.1099	-0.085
1.00	0.889	0.824	0.1611	-0.128
1.00	1.108	1.000	0.2246	-0.168
1.03	-0.164	-0.246	0.0520	0.121
1.03	-0.109	-0.186	0.0479	0.109
1.03	0.005	-0.050	0.0437	0.076
1.03	0.116	0.082	0.0448	0.046
1.03	0.228	0.198	0.0511	0.017
1.03	0.338	0.305	0.0600	-0.008
1.03	0.449	0.414	0.0725	-0.033
1.03	0.558	0.515	0.0891	-0.059
1.03	0.668	0.621	0.1104	-0.086
1.03	0.887	0.808	0.1615	-0.125
1.03	1.105	0.980	0.2237	-0.162
1.05	-0.161	-0.228	0.0517	0.130
1.05	-0.105	-0.158	0.0485	0.114
1.05	0.006	-0.043	0.0450	0.080
1.05	0.117	0.078	0.0457	0.051
1.05	0.229	0.191	0.0514	0.023
1.05	0.340	0.303	0.0606	-0.005
1.05	0.451	0.410	0.0730	-0.028
1.05	0.559	0.510	0.0888	-0.054
1.05	0.670	0.609	0.1091	-0.077
1.05	0.889	0.795	0.1587	-0.119
1.05	1.107	0.965	0.2217	-0.158
1.10	-0.165	-0.253	0.0551	0.129
1.10	-0.110	-0.198	0.0512	0.116
1.10	0.002	-0.080	0.0460	0.082
1.10	0.113	0.040	0.0450	0.048
1.10	0.224	0.158	0.0496	0.018
1.10	0.336	0.268	0.0585	-0.004
1.10	0.448	0.378	0.0708	-0.029
1.10	0.559	0.495	0.0878	-0.055
1.10	0.670	0.601	0.1081	-0.084
1.10	0.891	0.797	0.1590	-0.133
1.10	1.108	0.965	0.2194	-0.176
1.20	-0.161	-0.208	0.0538	0.118
1.20	-0.107	-0.157	0.0505	0.100
1.20	0.003	-0.056	0.0465	0.066
1.20	0.113	0.051	0.0463	0.029
1.20	0.223	0.157	0.0501	-0.004
1.20	0.332	0.259	0.0582	-0.037
1.20	0.443	0.363	0.0699	-0.066
1.20	0.552	0.461	0.0846	-0.093
1.20	0.664	0.568	0.1036	-0.123
1.20	0.881	0.765	0.1505	-0.197
1.30	-0.165	-0.196	0.0513	0.090
1.30	-0.111	-0.149	0.0477	0.073
1.30	-0.002	-0.058	0.0436	0.042
1.30	0.106	0.033	0.0433	0.010
1.30	0.215	0.128	0.0463	-0.022
1.30	0.324	0.221	0.0530	-0.052
1.30	0.433	0.313	0.0632	-0.081
1.30	0.542	0.405	0.0763	-0.109
1.30	0.652	0.497	0.0929	-0.136
1.30	0.870	0.678	0.1364	-0.186
1.40	-0.161	-0.170	0.0505	0.088
1.40	-0.108	-0.128	0.0474	0.072
1.40	0.000	-0.047	0.0437	0.043
1.40	0.107	0.038	0.0430	0.013
1.40	0.209	0.121	0.0457	-0.017
1.40	0.322	0.213	0.0520	-0.050
1.40	0.432	0.297	0.0613	-0.079
1.40	0.537	0.381	0.0733	-0.107
1.40	0.646	0.467	0.0886	-0.136

TABLE II.- STATIC LONGITUDINAL AERODYNAMIC DATA FOR THE BASIC MODEL AND ITS VARIOUS CONFIGURATIONS - Continued

(k) Configuration S_1N_4T

M	α	C_L	C_D	C_m	M	α	C_L	C_D	C_m
0.80	-0.166	-0.194	0.0287	0.051	1.03	-0.163	-0.240	0.0557	0.124
0.80	-0.111	-0.144	0.0259	0.043	1.03	-0.107	-0.172	0.0519	0.108
0.80	-0.003	-0.053	0.0232	0.026	1.03	0.005	-0.050	0.0484	0.077
0.80	0.104	0.026	0.0222	0.014	1.03	0.115	0.073	0.0488	0.045
0.80	0.213	0.120	0.0248	0.001	1.03	0.227	0.190	0.0544	0.016
0.80	0.322	0.217	0.0293	-0.016	1.03	0.337	0.296	0.0631	-0.007
0.80	0.432	0.308	0.0363	-0.025	1.03	0.449	0.404	0.0755	-0.030
0.80	0.541	0.404	0.0477	-0.034	1.03	0.558	0.503	0.0915	-0.053
0.80	0.650	0.487	0.0630	-0.041	1.03	0.668	0.602	0.1117	-0.075
0.80	0.861	0.618	0.1032	-0.076	1.03	0.887	0.790	0.1620	-0.116
0.80	1.067	0.722	0.1521	-0.121	1.03	1.106	0.959	0.2239	-0.151
0.80	1.274	0.807	0.1990	-0.147					
0.80	1.483	0.879	0.2499	-0.154					
0.85	-0.167	-0.204	0.0296	0.053	1.05	-0.160	-0.212	0.0547	0.123
0.85	-0.112	-0.150	0.0269	0.045	1.05	-0.106	-0.159	0.0516	0.107
0.85	-0.003	-0.055	0.0239	0.028	1.05	0.006	-0.043	0.0488	0.079
0.85	0.105	0.025	0.0230	0.017	1.05	0.117	0.074	0.0493	0.049
0.85	0.214	0.121	0.0255	0.002	1.05	0.228	0.185	0.0547	0.022
0.85	0.323	0.222	0.0307	-0.014	1.05	0.339	0.292	0.0630	-0.004
0.85	0.433	0.321	0.0387	-0.025	1.05	0.450	0.400	0.0753	-0.026
0.85	0.543	0.418	0.0517	-0.034	1.05	0.560	0.500	0.0916	-0.047
0.85	0.652	0.506	0.0683	-0.047	1.05	0.671	0.595	0.1109	-0.068
0.85	0.865	0.645	0.1077	-0.075	1.05	0.889	0.778	0.1602	-0.110
0.85	1.067	0.735	0.1552	-0.139	1.05	1.108	0.948	0.2284	-0.148
0.85	1.274	0.810	0.2084	-0.167					
0.85	1.485	0.900	0.2572	-0.176					
0.90	-0.168	-0.216	0.0326	0.060	1.10	-0.163	-0.246	0.0587	0.134
0.90	-0.113	-0.159	0.0288	0.050	1.10	-0.108	-0.187	0.0545	0.116
0.90	-0.003	-0.064	0.0261	0.034	1.10	0.003	-0.076	0.0498	0.085
0.90	0.105	0.024	0.0242	0.021	1.10	0.112	0.035	0.0491	0.054
0.90	0.216	0.125	0.0274	0.007	1.10	0.223	0.149	0.0532	0.022
0.90	0.326	0.231	0.0336	-0.011	1.10	0.334	0.256	0.0614	-0.005
0.90	0.438	0.339	0.0431	-0.024	1.10	0.445	0.365	0.0730	-0.030
0.90	0.547	0.440	0.0581	-0.040	1.10	0.556	0.474	0.0891	-0.050
0.90	0.656	0.533	0.0764	-0.059	1.10	0.666	0.579	0.1085	-0.080
0.90	0.869	0.675	0.1181	-0.096	1.10	0.886	0.771	0.1575	-0.122
					1.10	1.104	0.938	0.2172	-0.165
0.95	-0.167	-0.219	0.0393	0.068	1.20	-0.160	-0.200	0.0574	0.114
0.95	-0.112	-0.161	0.0358	0.058	1.20	-0.107	-0.151	0.0541	0.095
0.95	-0.002	-0.066	0.0326	0.048	1.20	0.002	-0.049	0.0503	0.060
0.95	0.107	0.020	0.0319	0.040	1.20	0.110	0.051	0.0501	0.027
0.95	0.219	0.134	0.0343	0.028	1.20	0.220	0.153	0.0539	-0.006
0.95	0.328	0.248	0.0425	-0.001	1.20	0.329	0.249	0.0614	-0.035
0.95	0.440	0.374	0.0561	-0.025	1.20	0.439	0.350	0.0727	-0.065
0.95	0.550	0.483	0.0721	-0.051	1.20	0.548	0.448	0.0867	-0.091
0.95	0.658	0.592	0.0933	-0.077	1.20	0.658	0.547	0.1045	-0.118
0.95	0.871	0.743	0.1379	-0.113	1.20	0.874	0.740	0.1493	-0.191
0.95	1.084	0.875	0.1892	-0.145	1.20	1.094	0.906	0.2070	-0.216
0.95	1.277	0.889	0.2897	-0.206					
0.98	-0.165	-0.236	0.0482	0.099	1.30	-0.164	-0.192	0.0562	0.088
0.98	-0.110	-0.174	0.0440	0.086	1.30	-0.110	-0.147	0.0580	0.073
0.98	0.002	-0.056	0.0404	0.063	1.30	-0.002	-0.060	0.0480	0.042
0.98	0.113	0.076	0.0407	0.032	1.30	0.105	0.031	0.0475	0.011
0.98	0.224	0.191	0.0460	0.008	1.30	0.214	0.123	0.0505	-0.019
0.98	0.333	0.299	0.0560	-0.013	1.30	0.323	0.210	0.0568	-0.048
0.98	0.444	0.409	0.0679	-0.035	1.30	0.431	0.299	0.0666	-0.075
0.98	0.554	0.517	0.0851	-0.057	1.30	0.540	0.389	0.0789	-0.101
0.98	0.662	0.612	0.1052	-0.076	1.30	0.649	0.476	0.0948	-0.127
0.98	0.880	0.798	0.1561	-0.117	1.30	0.867	0.650	0.1361	-0.175
0.98	1.096	0.967	0.2166	-0.158	1.30	1.087	0.820	0.1904	-0.217
0.98	1.308	1.084	0.2781	-0.177					
1.00	-0.164	-0.233	0.0518	0.109	1.40	-0.161	-0.168	0.0550	0.086
1.00	-0.109	-0.172	0.0488	0.097	1.40	-0.111	-0.143	0.0538	0.067
1.00	0.003	-0.060	0.0441	0.074	1.40	0.000	-0.045	0.0481	0.042
1.00	0.116	0.070	0.0448	0.045	1.40	0.103	0.080	0.0479	0.007
1.00	0.226	0.183	0.0501	0.019	1.40	0.214	0.123	0.0503	-0.019
1.00	0.337	0.297	0.0590	-0.008	1.40	0.322	0.207	0.0563	-0.049
1.00	0.448	0.406	0.0719	-0.030	1.40	0.430	0.290	0.0654	-0.078
1.00	0.558	0.511	0.0894	-0.052	1.40	0.537	0.372	0.0769	-0.104
1.00	0.668	0.613	0.1102	-0.075	1.40	0.652	0.453	0.0921	-0.131
1.00	0.887	0.807	0.1618	-0.120					
1.00	1.105	0.979	0.2240	-0.160					

TABLE II.- STATIC LONGITUDINAL AERODYNAMIC DATA FOR THE BASIC MODEL AND ITS VARIOUS CONFIGURATIONS - Continued

(1) Configuration S_1N_{4W}

M	α	C_L	C_D	C_m	M	α	C_L	C_D	C_m
0.80	-0.163	-0.171	0.0281	0.050	1.03	-0.160	-0.208	0.0545	0.118
0.80	-0.110	-0.133	0.0259	0.044	1.03	-0.105	-0.159	0.0513	0.109
0.80	-0.003	-0.059	0.0232	0.028	1.03	0.005	-0.058	0.0480	0.086
0.80	0.102	0.010	0.0225	0.017	1.03	0.115	0.041	0.0482	0.062
0.80	0.210	0.081	0.0243	0.007	1.03	0.224	0.140	0.0523	0.038
0.80	0.317	0.161	0.0272	-0.009	1.03	0.333	0.226	0.0586	0.020
0.80	0.425	0.242	0.0325	-0.017	1.03	0.444	0.330	0.0687	-0.008
0.80	0.533	0.327	0.0410	-0.025	1.03	0.552	0.426	0.0825	-0.031
0.80	0.642	0.410	0.0536	-0.032	1.03	0.663	0.524	0.1011	-0.053
0.80	0.856	0.569	0.0944	-0.064	1.03	0.881	0.704	0.1471	-0.092
0.80	1.067	0.696	0.1449	-0.101	1.03	1.100	0.868	0.2039	-0.124
0.80	1.276	0.791	0.1943	-0.121					
0.80	1.485	0.865	0.2447	-0.123					
0.85	-0.164	-0.179	0.0293	0.054	1.05	-0.158	-0.198	0.0545	0.124
0.85	-0.111	-0.138	0.0273	0.047	1.05	-0.103	-0.150	0.0521	0.114
0.85	-0.003	-0.055	0.0239	0.026	1.05	0.006	-0.050	0.0491	0.087
0.85	0.102	0.008	0.0235	0.019	1.05	0.115	0.045	0.0491	0.062
0.85	0.210	0.082	0.0249	0.009	1.05	0.225	0.141	0.0530	0.038
0.85	0.318	0.165	0.0284	-0.006	1.05	0.335	0.235	0.0596	0.015
0.85	0.428	0.251	0.0341	-0.014	1.05	0.445	0.330	0.0696	-0.005
0.85	0.536	0.339	0.0444	-0.023	1.05	0.554	0.424	0.0831	-0.026
0.85	0.646	0.429	0.0586	-0.033	1.05	0.664	0.517	0.1005	-0.047
0.85	0.864	0.610	0.0990	-0.059	1.05	0.882	0.692	0.1451	-0.085
0.85	1.069	0.707	0.1492	-0.116	1.05	1.101	0.858	0.2024	-0.119
0.85	1.278	0.803	0.1992	-0.137					
0.85	1.489	0.883	0.2514	-0.140					
0.90	-0.165	-0.189	0.0318	0.063	1.20	-0.158	-0.183	0.0566	0.115
0.90	-0.111	-0.146	0.0293	0.055	1.20	-0.104	-0.137	0.0535	0.098
0.90	-0.003	-0.068	0.0262	0.038	1.20	0.004	-0.050	0.0503	0.070
0.90	0.103	0.004	0.0248	0.025	1.20	0.113	0.041	0.0503	0.040
0.90	0.212	0.084	0.0267	0.014	1.20	0.221	0.130	0.0536	0.014
0.90	0.320	0.169	0.0303	-0.001	1.20	0.330	0.218	0.0601	-0.013
0.90	0.430	0.255	0.0367	-0.010	1.20	0.439	0.308	0.0697	-0.038
0.90	0.539	0.353	0.0491	-0.023	1.20	0.548	0.394	0.0818	-0.061
0.90	0.649	0.448	0.0647	-0.037	1.20	0.658	0.483	0.0976	-0.084
0.90	0.867	0.638	0.1090	-0.077	1.20	0.875	0.666	0.1385	-0.152
					1.20	1.093	0.825	0.1909	-0.187
0.95	-0.164	-0.193	0.0396	0.076	1.10	-0.160	-0.215	0.0576	0.128
0.95	-0.110	-0.153	0.0367	0.069	1.10	-0.106	-0.166	0.0542	0.113
0.95	-0.002	-0.078	0.0324	0.056	1.10	0.003	-0.074	0.0502	0.088
0.95	0.105	-0.005	0.0310	0.046	1.10	0.112	0.022	0.0492	0.063
0.95	0.215	0.081	0.0331	0.033	1.10	0.222	0.119	0.0527	0.039
0.95	0.324	0.173	0.0382	0.017	1.10	0.332	0.209	0.0591	0.020
0.95	0.435	0.273	0.0477	0.003	1.10	0.442	0.302	0.0684	0.004
0.95	0.544	0.376	0.0604	-0.025	1.10	0.553	0.401	0.0816	-0.015
0.95	0.654	0.483	0.0790	-0.051	1.10	0.663	0.501	0.0990	-0.041
0.95	0.872	0.669	0.1259	-0.094	1.10	0.881	0.685	0.1430	-0.087
0.95	1.087	0.816	0.1781	-0.125	1.10	1.099	0.846	0.1980	-0.124
0.98	-0.161	-0.187	0.0469	0.091	1.30	-0.162	-0.170	0.0546	0.085
0.98	-0.107	-0.144	0.0448	0.083	1.30	-0.108	-0.129	0.0517	0.071
0.98	0.002	-0.057	0.0406	0.064	1.30	0.000	-0.049	0.0484	0.045
0.98	0.111	0.020	0.0391	0.054	1.30	0.107	0.030	0.0483	0.020
0.98	0.220	0.117	0.0432	0.035	1.30	0.216	0.113	0.0507	-0.006
0.98	0.329	0.209	0.0489	0.017	1.30	0.324	0.193	0.0565	-0.031
0.98	0.440	0.312	0.0584	-0.004	1.30	0.432	0.272	0.0646	-0.055
0.98	0.550	0.419	0.0738	-0.026	1.30	0.540	0.353	0.0758	-0.078
0.98	0.660	0.522	0.0925	-0.051	1.30	0.649	0.436	0.0902	-0.101
0.98	0.878	0.712	0.1405	-0.096	1.30	0.866	0.599	0.1279	-0.145
0.98	1.096	0.874	0.1968	-0.133	1.30	1.085	0.753	0.1764	-0.181
0.98	1.313	1.021	0.2627	-0.160					
1.00	-0.160	-0.199	0.0520	0.109	1.40	-0.159	-0.146	0.0541	0.081
1.00	-0.106	-0.153	0.0490	0.097	1.40	-0.106	-0.109	0.0513	0.068
1.00	0.003	-0.065	0.0453	0.079	1.40	0.001	-0.034	0.0478	0.041
1.00	0.113	0.032	0.0453	0.059	1.40	0.108	0.043	0.0479	0.013
1.00	0.223	0.125	0.0489	0.038	1.40	0.215	0.118	0.0506	-0.013
1.00	0.332	0.222	0.0547	0.016	1.40	0.323	0.196	0.0563	-0.039
1.00	0.442	0.322	0.0646	-0.004	1.40	0.431	0.269	0.0643	-0.063
1.00	0.553	0.431	0.0802	-0.029	1.40	0.538	0.345	0.0748	-0.086
1.00	0.664	0.541	0.0993	-0.050	1.40	0.646	0.421	0.0886	-0.107
1.00	0.882	0.714	0.1456	-0.092					
1.00	1.099	0.878	0.2023	-0.128					

TABLE II.- STATIC LONGITUDINAL AERODYNAMIC DATA FOR THE BASIC MODEL AND ITS VARIOUS CONFIGURATIONS - Continued

(m) Configuration S_1N_2T

M	α	C_L	C_D	C_m	M	α	C_L	C_D	C_m
0.80	-0.165	-0.201	0.0274	0.055	1.03	-0.163	-0.239	0.0517	0.124
0.80	-0.111	-0.149	0.0243	0.045	1.03	-0.108	-0.175	0.0480	0.109
0.80	-0.003	-0.056	0.0216	0.027	1.03	0.005	-0.050	0.0446	0.076
0.80	0.104	0.026	0.0206	0.014	1.03	0.117	0.080	0.0450	0.043
0.80	0.214	0.122	0.0234	-0.001	1.03	0.227	0.192	0.0512	0.017
0.80	0.321	0.222	0.0284	-0.020	1.03	0.338	0.298	0.0600	-0.011
0.80	0.430	0.316	0.0358	-0.032	1.03	0.449	0.408	0.0719	-0.037
0.80	0.539	0.411	0.0470	-0.042	1.03	0.559	0.516	0.0885	-0.066
0.80	0.640	0.505	0.0620	-0.052	1.03	0.669	0.620	0.1093	-0.092
0.80	0.862	0.661	0.1048	-0.082	1.03	0.890	0.818	0.1619	-0.137
					1.03	1.108	0.998	0.2258	-0.179
0.85	-0.167	-0.201	0.0276	0.055	1.05	-0.161	-0.225	0.0516	0.129
0.85	-0.112	-0.147	0.0245	0.044	1.05	-0.106	-0.162	0.0483	0.111
0.85	-0.003	-0.053	0.0220	0.027	1.05	0.006	-0.042	0.0451	0.078
0.85	0.105	0.032	0.0209	0.014	1.05	0.117	0.075	0.0458	0.049
0.85	0.214	0.128	0.0239	-0.001	1.05	0.228	0.194	0.0510	0.014
0.85	0.324	0.232	0.0296	-0.019	1.05	0.339	0.302	0.0603	-0.011
0.85	0.435	0.337	0.0381	-0.032	1.05	0.450	0.407	0.0724	-0.034
0.85	0.545	0.434	0.0508	-0.043	1.05	0.560	0.515	0.0889	-0.063
0.85	0.655	0.537	0.0692	-0.057	1.05	0.670	0.615	0.1089	-0.087
0.85	0.872	0.705	0.1131	-0.086	1.05	0.890	0.809	0.1604	-0.133
					1.05	1.109	0.989	0.2247	-0.174
0.90	-0.168	-0.212	0.0301	0.063	1.10	-0.163	-0.246	0.0549	0.133
0.90	-0.113	-0.152	0.0258	0.050	1.10	-0.109	-0.189	0.0510	0.116
0.90	-0.003	-0.058	0.0238	0.033	1.10	0.002	-0.075	0.0466	0.081
0.90	0.106	0.025	0.0225	0.018	1.10	0.112	0.039	0.0458	0.049
0.90	0.216	0.134	0.0258	0.001	1.10	0.224	0.157	0.0499	0.015
0.90	0.327	0.245	0.0322	-0.019	1.10	0.334	0.267	0.0585	-0.011
0.90	0.439	0.357	0.0422	-0.034	1.10	0.446	0.376	0.0707	-0.035
0.90	0.550	0.471	0.0582	-0.053	1.10	0.557	0.486	0.0867	-0.060
0.90	0.660	0.574	0.0780	-0.072	1.10	0.668	0.600	0.1071	-0.093
0.90	0.878	0.749	0.1256	-0.111	1.10	0.887	0.801	0.1579	-0.147
					1.10	1.106	0.976	0.2192	-0.188
0.95	-0.168	-0.222	0.0356	0.071	1.20	-0.160	-0.208	0.0540	0.117
0.95	-0.113	-0.165	0.0323	0.060	1.20	-0.106	-0.150	0.0505	0.098
0.95	-0.002	-0.066	0.0290	0.045	1.20	0.003	-0.049	0.0472	0.062
0.95	0.107	0.018	0.0273	0.038	1.20	0.111	0.055	0.0472	0.027
0.95	0.219	0.133	0.0318	0.018	1.20	0.221	0.158	0.0512	-0.007
0.95	0.330	0.247	0.0394	-0.007	1.20	0.330	0.257	0.0589	-0.039
0.95	0.443	0.375	0.0527	-0.035	1.20	0.440	0.358	0.0704	-0.069
0.95	0.554	0.508	0.0707	-0.070	1.20	0.550	0.459	0.0847	-0.096
0.95	0.665	0.626	0.0938	-0.099	1.20	0.660	0.559	0.1028	-0.126
0.95	0.881	0.808	0.1439	-0.146	1.20	0.876	0.760	0.1486	-0.205
0.95	1.099	0.980	0.2069	-0.184					
0.98	-0.165	-0.231	0.0446	0.101	1.30	-0.164	-0.191	0.0514	0.090
0.98	-0.110	-0.173	0.0409	0.088	1.30	-0.110	-0.146	0.0484	0.074
0.98	0.002	-0.054	0.0372	0.064	1.30	-0.001	-0.053	0.0445	0.042
0.98	0.115	0.075	0.0390	0.034	1.30	0.107	0.035	0.0443	0.010
0.98	0.225	0.187	0.0427	0.009	1.30	0.216	0.129	0.0474	-0.021
0.98	0.336	0.301	0.0513	-0.019	1.30	0.324	0.221	0.0541	-0.052
0.98	0.448	0.418	0.0649	-0.043	1.30	0.433	0.310	0.0642	-0.081
0.98	0.558	0.535	0.0830	-0.071	1.30	0.541	0.399	0.0766	-0.107
0.98	0.668	0.642	0.1040	-0.097	1.30	0.650	0.491	0.0930	-0.135
0.98	0.887	0.838	0.1571	-0.145	1.30	0.868	0.669	0.1352	-0.187
0.98	1.106	1.023	0.2226	-0.192					
1.00	-0.164	-0.229	0.0483	0.110	1.40	-0.161	-0.169	0.0511	0.088
1.00	-0.108	-0.171	0.0457	0.099	1.40	-0.108	-0.127	0.0480	0.073
1.00	0.003	-0.059	0.0417	0.075	1.40	0.000	-0.045	0.0443	0.042
1.00	0.115	0.068	0.0415	0.044	1.40	0.108	0.040	0.0441	0.011
1.00	0.226	0.183	0.0475	0.019	1.40	0.215	0.127	0.0470	-0.021
1.00	0.337	0.297	0.0560	-0.012	1.40	0.323	0.212	0.0532	-0.051
1.00	0.448	0.411	0.0693	-0.038	1.40	0.431	0.294	0.0622	-0.080
1.00	0.560	0.525	0.0862	-0.065	1.40	0.538	0.379	0.0742	-0.109
1.00	0.670	0.635	0.1084	-0.092	1.40	0.647	0.465	0.0894	-0.137
1.00	0.889	0.840	0.1615	-0.143					
1.00	1.108	1.026	0.2274	-0.189					

TABLE II.- STATIC LONGITUDINAL AERODYNAMIC DATA FOR THE BASIC MODEL AND ITS VARIOUS CONFIGURATIONS - Continued

(n) Configuration S_4

M	α	C_L	C_D	C_m	M	α	C_L	C_D	C_m
0.80	-01.63	-0.160	0.0246	0.046	1.03	-01.62	-0.182	0.0449	0.103
0.80	-01.09	-0.120	0.0225	0.040	1.03	-01.06	-0.135	0.0421	0.093
0.80	-00.02	-0.044	0.0200	0.027	1.03	00.03	-0.049	0.0395	0.079
0.80	01.04	0.021	0.0188	0.017	1.03	01.13	0.041	0.0392	0.069
0.80	02.12	0.095	0.0021	0.006	1.03	02.24	0.129	0.0429	0.041
0.80	03.20	0.173	0.0248	-0.006	1.03	03.34	0.219	0.0492	0.023
0.80	04.27	0.253	0.0306	-0.014	1.03	04.44	0.313	0.0586	0.004
0.80	05.36	0.336	0.0392	-0.020	1.03	05.55	0.413	0.0728	-0.017
0.80	06.44	0.416	0.0517	-0.025	1.03	06.66	0.503	0.0904	-0.034
0.80	08.62	0.578	0.0882	-0.038	1.03	08.86	0.686	0.1359	-0.069
0.80	10.73	0.709	0.1430	-0.076					
0.85	-01.63	-0.164	0.0252	0.050	1.05	-01.61	-0.180	0.0458	0.110
0.85	-01.09	-0.123	0.0230	0.044	1.05	-01.05	-0.133	0.0431	0.101
0.85	-00.02	-0.045	0.0205	0.028	1.05	00.04	-0.051	0.0403	0.086
0.85	01.04	0.022	0.0193	0.018	1.05	01.15	0.040	0.0400	0.069
0.85	02.12	0.095	0.0217	0.008	1.05	02.24	0.124	0.0435	0.049
0.85	03.20	0.182	0.0257	-0.007	1.05	03.34	0.211	0.0495	0.031
0.85	04.27	0.262	0.0314	-0.015	1.05	04.44	0.303	0.0586	0.014
0.85	05.37	0.347	0.0413	-0.021	1.05	05.55	0.401	0.0726	-0.008
0.85	06.46	0.432	0.0549	-0.026	1.05	06.66	0.496	0.0902	-0.029
0.85	08.64	0.609	0.0942	-0.043	1.05	08.87	0.676	0.1356	-0.063
0.90	-01.65	-0.174	0.0272	0.058	1.10	-01.64	-0.193	0.0483	0.104
0.90	-01.10	-0.128	0.0245	0.047	1.10	-01.08	-0.145	0.0451	0.089
0.90	-00.02	-0.048	0.0216	0.033	1.10	00.01	-0.057	0.0418	0.069
0.90	01.05	0.016	0.0204	0.023	1.10	01.11	0.029	0.0418	0.053
0.90	02.12	0.093	0.0225	0.011	1.10	02.22	0.124	0.0451	0.034
0.90	03.23	0.178	0.0268	-0.001	1.10	03.33	0.211	0.0519	0.026
0.90	04.32	0.267	0.0334	-0.011	1.10	04.44	0.301	0.0613	0.009
0.90	05.43	0.361	0.0449	-0.021	1.10	05.55	0.396	0.0743	-0.011
0.90	06.53	0.457	0.0608	-0.034	1.10	06.67	0.489	0.0915	-0.027
0.90	08.76	0.662	0.1081	-0.068	1.10	08.86	0.669	0.1354	-0.072
0.95	-01.65	-0.172	0.0326	0.063	1.20	-01.62	-0.179	0.0484	0.105
0.95	01.09	-0.134	0.0302	0.060	1.20	-01.07	-0.135	0.0455	0.091
0.95	-00.01	-0.054	0.0272	0.047	1.20	00.01	-0.051	0.0420	0.064
0.95	01.07	0.016	0.0263	0.041	1.20	01.11	0.039	0.0417	0.038
0.95	02.16	0.100	0.0290	0.029	1.20	02.21	0.128	0.0453	0.014
0.95	03.26	0.185	0.0340	0.014	1.20	03.32	0.219	0.0521	-0.010
0.95	04.36	0.276	0.0412	-0.001	1.20	04.41	0.305	0.0620	-0.034
0.95	05.47	0.384	0.0553	-0.024	1.20	05.52	0.392	0.0750	-0.051
0.95	06.57	0.490	0.0739	-0.048	1.20	06.63	0.479	0.0912	-0.071
0.95	08.80	0.695	0.1232	-0.093	1.20	08.82	0.649	0.1328	-0.114
0.98	-01.63	-0.183	0.0397	0.088	1.30	-01.65	-0.176	0.0461	0.087
0.98	-01.07	-0.133	0.0364	0.076	1.30	-01.10	-0.136	0.0433	0.073
0.98	00.01	-0.049	0.0336	0.063	1.30	-00.02	-0.056	0.0396	0.048
0.98	01.12	0.046	0.0341	0.045	1.30	01.07	0.023	0.0389	0.024
0.98	02.22	0.132	0.0378	0.030	1.30	02.16	0.104	0.0419	0.001
0.98	03.31	0.218	0.0431	0.014	1.30	03.26	0.185	0.0479	-0.022
0.98	04.48	0.316	0.0528	-0.000	1.30	04.34	0.265	0.0566	-0.043
0.98	05.53	0.414	0.0662	-0.019	1.30	05.44	0.346	0.0686	-0.063
0.98	06.64	0.513	0.0848	-0.040	1.30	06.54	0.427	0.0834	-0.084
0.98	08.83	0.701	0.1312	-0.082	1.30	08.74	0.590	0.1228	-0.180
1.00	-01.62	-0.180	0.0427	0.098	1.40	-01.62	-0.151	0.0457	0.079
1.00	-01.06	-0.135	0.0402	0.090	1.40	-01.08	-0.113	0.0427	0.065
1.00	00.03	-0.048	0.0371	0.073	1.40	-00.01	-0.039	0.0393	0.040
1.00	01.13	0.043	0.0366	0.053	1.40	01.08	0.037	0.0390	0.016
1.00	02.22	0.130	0.0402	0.037	1.40	02.17	0.112	0.0419	-0.008
1.00	03.33	0.220	0.0463	0.020	1.40	03.25	0.190	0.0477	-0.033
1.00	04.43	0.317	0.0562	0.005	1.40	04.33	0.265	0.0561	-0.055
1.00	05.54	0.417	0.0699	-0.016	1.40	05.43	0.340	0.0676	-0.075
1.00	06.65	0.513	0.0885	-0.035	1.40	06.52	0.416	0.0818	-0.094
1.00	08.85	0.698	0.1344	-0.075	1.40	08.71	0.566	0.1187	-0.127

TABLE II.- STATIC LONGITUDINAL AERODYNAMIC DATA FOR THE BASIC MODEL AND ITS VARIOUS CONFIGURATIONS - Continued

(o) Configuration S_4P_M

M	α	C_L	C_D	C_m	M	α	C_L	C_D	C_m
0.80	-0.63	-0.164	0.0274	0.046	1.03	-0.63	-0.196	0.0455	0.103
0.80	-0.09	-0.124	0.0250	0.039	1.03	-0.08	-0.150	0.0423	0.093
0.80	-0.03	-0.050	0.0223	0.028	1.03	0.02	-0.057	0.0394	0.077
0.80	0.04	0.017	0.0216	0.018	1.03	0.13	0.039	0.0387	0.058
0.80	0.11	0.093	0.0234	0.008	1.03	0.24	0.136	0.0429	0.042
0.80	0.20	0.175	0.0273	-0.002	1.03	0.35	0.226	0.0501	0.028
0.80	0.27	0.253	0.0340	-0.009	1.03	0.45	0.324	0.0611	0.009
0.80	0.36	0.336	0.0444	-0.016	1.03	0.56	0.421	0.0760	-0.010
0.80	0.43	0.414	0.0581	-0.023	1.03	0.67	0.518	0.0953	-0.027
0.80	0.60	0.587	0.1002	-0.050	1.03	0.88	0.701	0.1433	-0.058
0.85	-0.64	-0.167	0.0280	0.047	1.05	-0.62	-0.186	0.0464	0.107
0.85	-0.10	-0.131	0.0257	0.044	1.05	-0.06	-0.142	0.0437	0.099
0.85	-0.03	-0.052	0.0230	0.030	1.05	0.03	-0.054	0.0406	0.083
0.85	0.04	0.019	0.0221	0.019	1.05	0.14	0.038	0.0406	0.065
0.85	0.12	0.095	0.0241	0.009	1.05	0.25	0.130	0.0444	0.047
0.85	0.22	0.182	0.0283	-0.002	1.05	0.35	0.223	0.0514	0.033
0.85	0.29	0.262	0.0354	-0.008	1.05	0.46	0.320	0.0622	0.014
0.85	0.39	0.348	0.0469	-0.017	1.05	0.57	0.411	0.0766	-0.002
0.85	0.48	0.435	0.0625	-0.027	1.05	0.69	0.509	0.0957	-0.020
0.85	0.65	0.608	0.1045	-0.058	1.05	0.89	0.687	0.1426	-0.050
0.90	-0.65	-0.176	0.0302	0.055	1.10	-0.63	-0.195	0.0490	0.107
0.90	-0.10	-0.134	0.0273	0.048	1.10	-0.07	-0.150	0.0460	0.097
0.90	-0.03	-0.055	0.0242	0.035	1.10	0.02	-0.061	0.0422	0.079
0.90	0.05	0.017	0.0234	0.023	1.10	0.12	0.029	0.0415	0.061
0.90	0.13	0.096	0.0251	0.013	1.10	0.22	0.119	0.0445	0.045
0.90	0.23	0.183	0.0298	0.001	1.10	0.33	0.212	0.0514	0.028
0.90	0.33	0.275	0.0382	-0.007	1.10	0.44	0.305	0.0618	0.014
0.90	0.43	0.370	0.0511	-0.017	1.10	0.56	0.404	0.0764	-0.006
0.90	0.54	0.465	0.0680	-0.031	1.10	0.67	0.504	0.0948	-0.029
0.90	0.70	0.640	0.1183	-0.078	1.10	0.88	0.687	0.1408	-0.062
0.95	-0.67	-0.189	0.0348	0.059	1.20	-0.61	-0.178	0.0496	0.107
0.95	-0.11	-0.143	0.0315	0.053	1.20	-0.06	-0.134	0.0466	0.093
0.95	-0.03	-0.063	0.0288	0.048	1.20	0.02	-0.047	0.0429	0.066
0.95	0.06	0.013	0.0276	0.039	1.20	0.12	0.041	0.0425	0.041
0.95	0.16	0.097	0.0295	0.027	1.20	0.20	0.132	0.0460	0.015
0.95	0.27	0.193	0.0354	0.014	1.20	0.32	0.221	0.0528	-0.009
0.95	0.37	0.290	0.0452	-0.001	1.20	0.41	0.311	0.0630	-0.030
0.95	0.48	0.396	0.0604	-0.022	1.20	0.52	0.400	0.0765	-0.051
0.95	0.60	0.505	0.0800	-0.043	1.20	0.63	0.491	0.0934	-0.072
0.95	0.82	0.718	0.1313	-0.086	1.20	0.82	0.665	0.1289	-0.112
0.98	-0.64	-0.187	0.0393	0.081	1.30	-0.63	-0.188	0.0484	0.100
0.98	-0.09	-0.145	0.0360	0.074	1.30	-0.08	-0.141	0.0451	0.086
0.98	0.00	-0.052	0.0331	0.060	1.30	-0.01	-0.060	0.0412	0.061
0.98	0.11	0.035	0.0328	0.048	1.30	0.08	0.021	0.0405	0.036
0.98	0.21	0.125	0.0359	0.035	1.30	0.17	0.106	0.0433	0.011
0.98	0.32	0.221	0.0432	0.021	1.30	0.26	0.188	0.0491	-0.013
0.98	0.42	0.321	0.0536	0.006	1.30	0.35	0.269	0.0579	-0.036
0.98	0.54	0.425	0.0693	-0.015	1.30	0.45	0.351	0.0700	-0.057
0.98	0.65	0.524	0.0890	-0.034	1.30	0.76	0.604	0.1261	-0.116
0.98	0.85	0.721	0.1389	-0.074	1.30	0.55	0.434	0.0858	-0.077
1.00	-0.63	-0.188	0.0420	0.093	1.40	-0.61	-0.153	0.0487	0.085
1.00	-0.08	-0.143	0.0389	0.085	1.40	-0.07	-0.115	0.0459	0.073
1.00	0.02	-0.053	0.0360	0.070	1.40	0.02	-0.041	0.0423	0.050
1.00	0.12	0.039	0.0362	0.057	1.40	0.09	0.035	0.0417	0.027
1.00	0.23	0.133	0.0398	0.041	1.40	0.18	0.114	0.0444	0.003
1.00	0.33	0.227	0.0463	0.024	1.40	0.27	0.191	0.0500	-0.020
1.00	0.44	0.327	0.0579	0.009	1.40	0.35	0.267	0.0584	-0.042
1.00	0.56	0.426	0.0732	-0.009	1.40	0.44	0.344	0.0700	-0.063
1.00	0.67	0.524	0.0927	-0.028	1.40	0.54	0.423	0.0845	-0.085
1.00	0.87	0.716	0.1415	-0.066	1.40	0.73	0.581	0.1229	-0.124

TABLE II.- STATIC LONGITUDINAL AERODYNAMIC DATA FOR THE BASIC MODEL AND ITS VARIOUS CONFIGURATIONS - Continued

(p) Configuration S_1M_{4M}

M	α	C_L	C_D	C_m	M	α	C_L	C_D	C_m
0.80	-0.165	-0.166	0.0303	0.042	1.03	-0.165	-0.202	0.0493	0.100
0.80	-0.110	-0.129	0.0280	0.037	1.03	-0.108	-0.149	0.0463	0.091
0.80	-0.003	-0.051	0.0253	0.026	1.03	0.002	-0.057	0.0425	0.075
0.80	0.104	0.020	0.0246	0.020	1.03	0.113	0.039	0.0424	0.058
0.80	0.212	0.092	0.0266	0.012	1.03	0.226	0.140	0.0469	0.044
0.80	0.321	0.174	0.0309	0.002	1.03	0.338	0.236	0.0546	0.031
0.80	0.429	0.258	0.0380	-0.001	1.03	0.449	0.333	0.0662	0.018
0.80	0.538	0.334	0.0482	-0.003	1.03	0.560	0.427	0.0808	0.003
0.80	0.647	0.419	0.0631	-0.010	1.03	0.672	0.523	0.1000	-0.013
0.80	0.864	0.590	0.1054	-0.033	1.03	0.895	0.709	0.1489	-0.040
0.80	1.079	0.746	0.1585	-0.061					
0.85	-0.165	-0.171	0.0312	0.044	1.05	-0.163	-0.188	0.0503	0.101
0.85	-0.111	-0.133	0.0288	0.040	1.05	-0.107	-0.141	0.0473	0.093
0.85	-0.004	-0.056	0.0259	0.030	1.05	0.003	-0.051	0.0444	0.078
0.85	0.104	0.016	0.0252	0.021	1.05	0.114	0.043	0.0443	0.062
0.85	0.213	0.093	0.0273	0.014	1.05	0.226	0.135	0.0482	0.047
0.85	0.322	0.180	0.0318	0.004	1.05	0.337	0.232	0.0560	0.032
0.85	0.431	0.263	0.0391	-0.000	1.05	0.449	0.328	0.0669	0.019
0.85	0.640	0.342	0.0505	-0.005	1.05	0.561	0.421	0.0819	0.006
0.85	0.650	0.431	0.0659	-0.011	1.05	0.679	0.522	0.1019	-0.009
0.85	0.868	0.608	0.1090	-0.038	1.05	0.895	0.698	0.1485	-0.035
0.90	-0.166	-0.176	0.0330	0.049	1.10	-0.164	-0.199	0.0536	0.106
0.90	-0.111	-0.137	0.0304	0.045	1.10	-0.108	-0.154	0.0503	0.098
0.90	-0.003	-0.055	0.0273	0.032	1.10	0.002	-0.064	0.0466	0.084
0.90	0.105	0.019	0.0264	0.023	1.10	0.113	0.026	0.0462	0.069
0.90	0.214	0.101	0.0285	0.014	1.10	0.224	0.128	0.0494	0.050
0.90	0.324	0.187	0.0333	0.005	1.10	0.336	0.217	0.0566	0.031
0.90	0.434	0.277	0.0422	-0.002	1.10	0.447	0.311	0.0673	0.022
0.90	0.548	0.369	0.0549	-0.011	1.10	0.559	0.405	0.0817	0.005
0.90	0.656	0.468	0.0725	-0.025	1.10	0.671	0.506	0.1005	-0.011
0.90	0.875	0.654	0.1185	-0.062	1.10	0.894	0.692	0.1470	-0.042
0.95	-0.168	-0.188	0.0377	0.054	1.20	-0.163	-0.182	0.0542	0.102
0.95	-0.112	-0.144	0.0358	0.053	1.20	-0.108	-0.137	0.0511	0.088
0.95	-0.003	-0.064	0.0326	0.048	1.20	0.002	-0.048	0.0474	0.064
0.95	0.107	0.014	0.0316	0.042	1.20	0.112	0.039	0.0471	0.041
0.95	0.217	0.099	0.0338	0.033	1.20	0.223	0.134	0.0508	0.018
0.95	0.329	0.194	0.0397	0.023	1.20	0.333	0.224	0.0580	-0.004
0.95	0.439	0.290	0.0495	0.011	1.20	0.444	0.316	0.0687	-0.024
0.95	0.551	0.395	0.0648	-0.004	1.20	0.555	0.407	0.0825	-0.042
0.95	0.664	0.511	0.0858	-0.026	1.20	0.667	0.498	0.0999	-0.059
0.95	0.887	0.728	0.1381	-0.069	1.20	0.889	0.684	0.1447	-0.101
0.98	-0.166	-0.192	0.0425	0.075	1.30	-0.164	-0.181	0.0524	0.098
0.98	-0.110	-0.147	0.0399	0.070	1.30	-0.109	-0.141	0.0493	0.086
0.98	-0.000	-0.058	0.0364	0.061	1.30	-0.000	-0.061	0.0455	0.064
0.98	0.110	0.024	0.0356	0.053	1.30	0.109	0.025	0.0447	0.040
0.98	0.222	0.126	0.0395	0.039	1.30	0.219	0.109	0.0478	0.017
0.98	0.333	0.222	0.0464	0.027	1.30	0.330	0.198	0.0540	-0.009
0.98	0.444	0.323	0.0572	0.014	1.30	0.439	0.279	0.0634	-0.027
0.98	0.556	0.427	0.0728	-0.003	1.30	0.549	0.361	0.0759	-0.045
0.98	0.668	0.531	0.0930	-0.021	1.30	0.660	0.447	0.0917	-0.065
0.98	0.889	0.727	0.1431	-0.057	1.30	0.881	0.616	0.1334	-0.099
1.00	-0.165	-0.193	0.0451	0.085	1.40	-0.162	-0.149	0.0524	0.078
1.00	-0.109	-0.145	0.0418	0.077	1.40	-0.107	-0.111	0.0495	0.067
1.00	0.001	-0.053	0.0392	0.067	1.40	0.001	-0.035	0.0458	0.045
1.00	0.113	0.036	0.0393	0.060	1.40	0.110	0.042	0.0455	0.023
1.00	0.225	0.137	0.0432	0.049	1.40	0.220	0.120	0.0486	0.002
1.00	0.336	0.227	0.0504	0.033	1.40	0.328	0.200	0.0546	-0.019
1.00	0.446	0.326	0.0614	0.018	1.40	0.438	0.278	0.0637	-0.038
1.00	0.559	0.430	0.0772	0.001	1.40	0.548	0.356	0.0758	-0.056
1.00	0.670	0.529	0.0962	-0.014	1.40	0.659	0.438	0.0913	-0.076
1.00	0.893	0.723	0.1468	-0.047					

TABLE II.- STATIC LONGITUDINAL AERODYNAMIC DATA FOR THE BASIC MODEL AND ITS VARIOUS CONFIGURATIONS - Continued

(q) Configuration S_1T_T

M	α	C_L	C_D	C_m	M	α	C_L	C_D	C_m
0.80	-0.156	-0.199	0.0272	0.051	1.03	-0.164	-0.242	0.0563	0.127
0.80	-0.112	-0.153	0.0243	0.045	1.03	-0.107	-0.178	0.0522	0.112
0.80	-0.003	-0.060	0.0210	0.028	1.03	0.004	-0.057	0.0482	0.080
0.80	0.105	0.025	0.0202	0.016	1.03	0.116	0.065	0.0485	0.050
0.80	0.213	0.120	0.0236	0.005	1.03	0.227	0.184	0.0541	0.022
0.80	0.322	0.208	0.0278	-0.009	1.03	0.339	0.297	0.0654	-0.004
0.80	0.432	0.299	0.0353	-0.018	1.03	0.450	0.403	0.0790	-0.030
0.80	0.540	0.393	0.0483	-0.027	1.03	0.559	0.512	0.0967	-0.060
0.80	0.649	0.481	0.0651	-0.039	1.03	0.670	0.618	0.1190	-0.088
0.80	0.860	0.621	0.1089	-0.076	1.03	0.891	0.815	0.1738	-0.135
0.80	1.068	0.722	0.1571	-0.118	1.03	1.108	0.980	0.2374	-0.172
0.80	1.275	0.804	0.2047	-0.140					
0.85	-0.168	-0.208	0.0282	0.054	1.05	-0.161	-0.233	0.0571	0.133
0.85	-0.113	-0.155	0.0251	0.045	1.05	-0.106	-0.168	0.0531	0.111
0.85	-0.003	-0.060	0.0217	0.030	1.05	0.005	-0.055	0.0496	0.084
0.85	0.104	0.023	0.0207	0.018	1.05	0.117	0.066	0.0505	0.054
0.85	0.214	0.120	0.0234	0.006	1.05	0.227	0.176	0.0563	0.027
0.85	0.324	0.213	0.0288	-0.007	1.05	0.339	0.290	0.0657	-0.001
0.85	0.436	0.318	0.0383	-0.017	1.05	0.450	0.400	0.0796	-0.028
0.85	0.545	0.415	0.0526	-0.030	1.05	0.560	0.506	0.0971	-0.055
0.85	0.653	0.505	0.0713	-0.047	1.05	0.671	0.609	0.1186	-0.082
0.85	0.866	0.641	0.1132	-0.082	1.05	0.890	0.800	0.1720	-0.130
					1.05	1.109	0.968	0.2362	-0.168
0.90	-0.169	-0.220	0.0311	0.058	1.10	-0.163	-0.236	0.0568	0.125
0.90	-0.114	-0.165	0.0275	0.051	1.10	-0.109	-0.184	0.0530	0.112
0.90	-0.003	-0.060	0.0236	0.033	1.10	0.003	-0.073	0.0484	0.082
0.90	0.105	0.020	0.0226	0.024	1.10	0.114	0.037	0.0482	0.054
0.90	0.216	0.122	0.0258	0.011	1.10	0.225	0.158	0.0527	0.022
0.90	0.327	0.228	0.0322	-0.004	1.10	0.336	0.262	0.0620	-0.004
0.90	0.438	0.330	0.0430	-0.017	1.10	0.447	0.372	0.0748	-0.032
0.90	0.548	0.435	0.0594	-0.037	1.10	0.558	0.488	0.0927	-0.061
0.90	0.656	0.522	0.0781	-0.068	1.10	0.670	0.600	0.1141	-0.093
0.90	0.865	0.644	0.1191	-0.103	1.10	0.891	0.796	0.1665	-0.144
					1.10	1.108	0.956	0.2282	-0.182
0.95	-0.169	-0.234	0.0378	0.075	1.20	-0.161	-0.198	0.0560	0.112
0.95	-0.114	-0.178	0.0337	0.064	1.20	-0.107	-0.148	0.0525	0.095
0.95	-0.002	-0.077	0.0294	0.053	1.20	0.003	-0.046	0.0487	0.058
0.95	0.109	0.027	0.0283	0.041	1.20	0.111	0.060	0.0492	0.022
0.95	0.220	0.138	0.0328	0.023	1.20	0.221	0.162	0.0544	-0.011
0.95	0.332	0.250	0.0405	0.001	1.20	0.331	0.267	0.0634	-0.044
0.95	0.444	0.368	0.0551	-0.024	1.20	0.441	0.366	0.0761	-0.075
0.95	0.555	0.497	0.0743	-0.058	1.20	0.551	0.471	0.0919	-0.105
0.95	0.666	0.620	0.0987	-0.093	1.20	0.651	0.569	0.1108	-0.134
					1.20	0.879	0.762	0.1579	-0.207
0.98	-0.166	-0.238	0.0471	0.102	1.30	-0.164	-0.195	0.0558	0.096
0.98	-0.111	-0.181	0.0422	0.088	1.30	-0.110	-0.150	0.0524	0.080
0.98	0.002	-0.061	0.0375	0.066	1.30	-0.001	-0.059	0.0481	0.049
0.98	0.114	0.061	0.0378	0.042	1.30	0.107	0.033	0.0473	0.017
0.98	0.226	0.180	0.0435	0.017	1.30	0.217	0.127	0.0510	-0.016
0.98	0.336	0.286	0.0525	-0.005	1.30	0.325	0.220	0.0580	-0.048
0.98	0.449	0.405	0.0669	-0.031	1.30	0.434	0.313	0.0684	-0.079
0.98	0.559	0.519	0.0861	-0.059	1.30	0.542	0.404	0.0821	-0.108
0.98	0.669	0.628	0.1094	-0.088	1.30	0.652	0.496	0.0991	-0.136
0.98	0.887	0.817	0.1640	-0.137	1.30	0.871	0.676	0.1432	-0.187
1.00	-0.165	-0.236	0.0508	0.109	1.40	-0.160	-0.172	0.0552	0.095
1.00	-0.110	-0.180	0.0469	0.097	1.40	-0.106	-0.129	0.0518	0.079
1.00	0.003	-0.062	0.0424	0.075	1.40	0.001	-0.048	0.0479	0.050
1.00	0.116	0.062	0.0434	0.058	1.40	0.108	0.038	0.0473	0.019
1.00	0.226	0.177	0.0489	0.025	1.40	0.217	0.126	0.0508	-0.014
1.00	0.338	0.288	0.0592	-0.001	1.40	0.324	0.213	0.0575	-0.046
1.00	0.449	0.402	0.0735	-0.027	1.40	0.432	0.299	0.0668	-0.078
1.00	0.559	0.520	0.0932	-0.058	1.40	0.539	0.383	0.0792	-0.108
1.00	0.670	0.629	0.1155	-0.087	1.40	0.648	0.470	0.0950	-0.138
1.00	0.889	0.828	0.1704	-0.138					

TABLE II.- STATIC LONGITUDINAL AERODYNAMIC DATA FOR THE BASIC MODEL AND ITS VARIOUS CONFIGURATIONS - Continued

(r) Configuration $S_1T_TT_W$

M	α	C_L	C_D	C_m	M	α	C_L	C_D	C_m
0.80	-0.171	-0.248	0.0334	0.059	1.03	-0.415	-0.260	0.0744	0.137
0.80	-0.116	-0.195	0.0300	0.050	1.03	-0.359	-0.200	0.0701	0.123
0.80	-0.007	-0.103	0.0257	0.035	1.03	-0.256	-0.130	0.0677	0.078
0.80	0.099	-0.028	0.0240	0.025	1.03	-0.147	0.030	0.0677	0.047
0.80	0.209	0.061	0.0257	0.015	1.03	-0.025	0.150	0.0706	0.037
0.80	0.317	0.149	0.0293	0.005	1.03	0.087	0.263	0.0800	0.012
0.80	0.427	0.244	0.0357	-0.003	1.03	0.199	0.379	0.0934	-0.015
0.80	0.535	0.335	0.0466	-0.011	1.03	0.309	0.483	0.1102	-0.041
0.80	0.645	0.429	0.0629	-0.026	1.03	0.419	0.583	0.1304	-0.069
					1.03	0.637	0.771	0.1814	-0.117
					1.03	0.856	0.937	0.2424	-0.155
0.85	-0.172	-0.258	0.0352	0.063	1.05	-0.163	-0.249	0.0762	0.137
0.85	-0.118	-0.209	0.0313	0.055	1.05	-0.108	-0.192	0.0727	0.124
0.85	-0.008	-0.114	0.0270	0.041	1.05	0.004	-0.078	0.0681	0.095
0.85	0.100	-0.034	0.0253	0.031	1.05	0.115	0.037	0.0680	0.066
0.85	0.210	0.057	0.0267	0.020	1.05	0.226	0.147	0.0732	0.041
0.85	0.319	0.154	0.0307	0.009	1.05	0.337	0.253	0.0813	0.014
0.85	0.430	0.247	0.0382	0.003	1.05	0.449	0.369	0.0942	-0.018
0.85	0.540	0.348	0.0511	-0.011	1.05	0.559	0.479	0.1106	-0.040
0.85	0.648	0.445	0.0690	-0.031	1.05	0.669	0.580	0.1306	-0.067
0.85	0.859	0.577	0.1089	-0.065	1.05	0.887	0.760	0.1803	-0.114
					1.05	1.106	0.926	0.2418	-0.154
0.90	-0.173	-0.273	0.0393	0.075	1.10	-0.164	-0.257	0.0735	0.142
0.90	-0.118	-0.221	0.0353	0.067	1.10	-0.109	-0.202	0.0694	0.127
0.90	-0.008	-0.125	0.0307	0.052	1.10	0.002	-0.090	0.0640	0.095
0.90	0.100	-0.045	0.0284	0.043	1.10	0.112	0.019	0.0633	0.065
0.90	0.211	0.053	0.0300	0.032	1.10	0.223	0.134	0.0674	0.033
0.90	0.321	0.154	0.0339	0.019	1.10	0.333	0.245	0.0759	-0.001
0.90	0.432	0.257	0.0430	0.006	1.10	0.445	0.351	0.0866	-0.027
0.90	0.541	0.361	0.0583	-0.017	1.10	0.555	0.458	0.1041	-0.053
0.90	0.648	0.438	0.0750	-0.036	1.10	0.659	0.527	0.1199	-0.093
0.90	0.857	0.555	0.1154	-0.077					
0.95	-0.170	-0.255	0.0504	0.089	1.20	-0.163	-0.217	0.0721	0.116
0.95	-0.115	-0.203	0.0463	0.081	1.20	-0.107	-0.157	0.0677	0.103
0.95	-0.003	-0.097	0.0408	0.067	1.20	0.003	-0.055	0.0637	0.068
0.95	0.109	0.107	0.0398	0.053	1.20	0.113	0.047	0.0636	0.035
0.95	0.219	0.118	0.0428	0.034	1.20	0.222	0.151	0.0681	0.002
0.95	0.331	0.236	0.0521	0.011	1.20	0.331	0.249	0.0761	-0.031
0.95	0.443	0.348	0.0643	-0.013	1.20	0.441	0.348	0.0873	-0.062
0.95	0.551	0.454	0.0809	-0.040	1.20	0.550	0.447	0.1017	-0.092
0.95	0.661	0.558	0.1022	-0.068	1.20	0.658	0.545	0.1191	-0.128
					1.20	0.876	0.732	0.1647	-0.189
0.98	-0.170	-0.263	0.0590	0.102	1.30	-0.163	-0.203	0.0685	0.108
0.98	-0.114	-0.203	0.0545	0.093	1.30	-0.108	-0.153	0.0647	0.090
0.98	0.000	-0.085	0.0508	0.078	1.30	-0.001	-0.065	0.0604	0.057
0.98	0.113	0.033	0.0502	0.058	1.30	0.107	0.029	0.0600	0.024
0.98	0.225	0.144	0.0554	0.038	1.30	0.217	0.123	0.0627	-0.005
0.98	0.335	0.253	0.0644	0.015	1.30	0.326	0.215	0.0698	-0.035
0.98	0.447	0.368	0.0768	-0.011	1.30	0.435	0.306	0.0797	-0.065
0.98	0.557	0.483	0.0974	-0.040	1.30	0.543	0.395	0.0925	-0.094
0.98	0.667	0.592	0.1186	-0.071	1.30	0.652	0.485	0.1087	-0.122
					1.30	0.871	0.658	0.1498	-0.167
1.00	-0.168	-0.274	0.0674	0.124	1.40	-0.159	-0.177	0.0682	0.108
1.00	-0.112	-0.217	0.0633	0.117	1.40	-0.104	-0.133	0.0648	0.092
1.00	0.001	-0.089	0.0574	0.088	1.40	0.003	-0.048	0.0608	0.060
1.00	0.114	0.035	0.0576	0.063	1.40	0.110	0.038	0.0600	0.027
1.00	0.225	0.150	0.0633	0.041	1.40	0.219	0.126	0.0630	-0.005
1.00	0.337	0.260	0.0731	0.018	1.40	0.326	0.212	0.0690	-0.037
1.00	0.448	0.375	0.0861	-0.011	1.40	0.434	0.297	0.0782	-0.068
1.00	0.558	0.485	0.1046	-0.041	1.40	0.541	0.380	0.0900	-0.097
1.00	0.658	0.594	0.1265	-0.071	1.40	0.650	0.465	0.1052	-0.127
1.00	0.887	0.785	0.1788	-0.119					

TABLE II.- STATIC LONGITUDINAL AERODYNAMIC DATA FOR THE BASIC MODEL AND ITS VARIOUS CONFIGURATIONS - Continued

(s) Configuration S_1T_T-H

M	α	C_L	C_D	C_m	M	α	C_L	C_D	C_m
0.80	-0.171	-0.160	0.0252	-0.025	1.03	-0.175	-0.189	0.0491	0.004
0.80	-0.116	-0.120	0.0229	-0.021	1.03	-0.118	-0.131	0.0455	0.001
0.80	-0.006	-0.037	0.0202	-0.010	1.03	-0.005	-0.025	0.0423	-0.005
0.80	0.104	0.033	0.0195	0.005	1.03	0.109	0.086	0.0440	-0.011
0.80	0.214	0.112	0.0224	0.016	1.03	0.223	0.198	0.0498	-0.016
0.80	0.324	0.191	0.0268	0.026	1.03	0.337	0.299	0.0605	-0.018
0.80	0.434	0.273	0.0338	0.040	1.03	0.449	0.398	0.0734	-0.021
0.80	0.544	0.353	0.0452	0.050	1.03	0.561	0.497	0.0910	-0.030
0.80	0.654	0.439	0.0615	0.056	1.03	0.674	0.599	0.1130	-0.041
0.80	0.867	0.556	0.1023	0.051	1.03	0.896	0.780	0.1655	-0.055
0.80	1.076	0.642	0.1459	0.044					
0.80	1.285	0.711	0.1887	0.054					
0.80	1.496	0.780	0.2366	0.066					
0.85	-0.171	-0.167	0.0262	-0.024	1.05	-0.175	-0.178	0.0487	0.001
0.85	-0.116	-0.124	0.0237	-0.020	1.05	-0.118	-0.118	0.0458	-0.004
0.85	-0.006	-0.040	0.0210	-0.009	1.05	-0.004	-0.014	0.0433	-0.009
0.85	0.103	0.031	0.0203	0.006	1.05	0.109	0.089	0.0447	-0.013
0.85	0.215	0.115	0.0233	0.016	1.05	0.223	0.192	0.0506	-0.017
0.85	0.324	0.202	0.0284	0.028	1.05	0.336	0.295	0.0608	-0.022
0.85	0.435	0.286	0.0367	0.040	1.05	0.451	0.398	0.0742	-0.025
0.85	0.545	0.374	0.0499	0.049	1.05	0.562	0.497	0.0918	-0.032
0.85	0.654	0.457	0.0673	0.048	1.05	0.675	0.593	0.1130	-0.039
0.85	0.867	0.576	0.1056	0.053	1.05	0.898	0.770	0.1654	-0.053
0.90	-0.175	-0.177	0.0274	-0.027	1.10	-0.177	-0.192	0.0505	-0.001
0.90	-0.119	-0.130	0.0245	-0.022	1.10	-0.120	-0.141	0.0473	0.000
0.90	-0.007	-0.042	0.0215	-0.010	1.10	-0.007	-0.040	0.0437	-0.007
0.90	0.104	0.029	0.0211	0.008	1.10	0.105	0.062	0.0439	-0.012
0.90	0.216	0.118	0.0245	0.020	1.10	0.219	0.166	0.0490	-0.018
0.90	0.329	0.211	0.0308	0.031	1.10	0.332	0.265	0.0582	-0.021
0.90	0.442	0.310	0.0408	0.039	1.10	0.446	0.368	0.0708	-0.025
0.90	0.553	0.403	0.0563	0.038	1.10	0.558	0.468	0.0877	-0.032
0.90	0.662	0.471	0.0733	0.040	1.10	0.671	0.574	0.1089	-0.041
0.90	0.876	0.579	0.1124	0.043	1.10	0.895	0.755	0.1591	-0.054
0.95	-0.177	-0.198	0.0321	-0.013	1.20	-0.174	-0.152	0.0503	-0.007
0.95	-0.120	-0.147	0.0283	-0.010	1.20	-0.118	-0.113	0.0474	-0.008
0.95	-0.007	-0.053	0.0254		1.20	-0.006	-0.017	0.0440	-0.017
0.95	0.106	0.034	0.0249	0.016	1.20	0.105	0.070	0.0447	-0.022
0.95	0.220	0.144	0.0298	0.018	1.20	0.218	0.165	0.0494	-0.028
0.95	0.333	0.240	0.0377	0.028	1.20	0.331	0.255	0.0583	-0.035
0.95	0.447	0.347	0.0500	0.030	1.20	0.444	0.348	0.0706	-0.042
0.95	0.560	0.474	0.0706	0.003	1.20	0.555	0.439	0.0854	-0.049
0.95	0.673	0.581	0.0932	-0.008	1.20	0.668	0.530	0.1034	-0.054
					1.20	0.893	0.700	0.1475	-0.059
0.98	-0.176	-0.193	0.0393	-0.006	1.30	-0.174	-0.164	0.0506	0.006
0.98	-0.120	-0.140	0.0354	-0.006	1.30	-0.119	-0.123	0.0473	0.003
0.98	-0.005	-0.035	0.0323	-0.004	1.30	-0.007	-0.040	0.0434	-0.002
0.98	0.108	0.079	0.0327	-0.005	1.30	0.105	0.040	0.0432	-0.008
0.98	0.222	0.187	0.0405	-0.009	1.30	0.216	0.123	0.0465	-0.013
0.98	0.336	0.291	0.0500	-0.010	1.30	0.327	0.207	0.0533	-0.020
0.98	0.449	0.395	0.0643	-0.015	1.30	0.439	0.290	0.0631	-0.026
0.98	0.561	0.504	0.0831	-0.025	1.30	0.549	0.370	0.0755	-0.038
0.98	0.673	0.608	0.1055	-0.033	1.30	0.662	0.456	0.0912	-0.038
0.98	0.895	0.780	0.1569	-0.039	1.30	0.885	0.620	0.1326	-0.047
1.00	-0.176	-0.192	0.0454	-0.005	1.40	-0.172	-0.135	0.0500	-0.002
1.00	-0.120	-0.142	0.0418	-0.005	1.40	-0.117	-0.099	0.0473	-0.004
1.00	-0.005	-0.032	0.0373	-0.005	1.40	-0.006	-0.026	0.0438	-0.010
1.00	0.109	0.081	0.0389	-0.006	1.40	0.105	0.050	0.0434	-0.015
1.00	0.223	0.188	0.0457	-0.009	1.40	0.215	0.126	0.0464	-0.020
1.00	0.336	0.290	0.0553	-0.014	1.40	0.326	0.202	0.0525	-0.026
1.00	0.449	0.398	0.0703	-0.020	1.40	0.437	0.276	0.0615	-0.032
1.00	0.561	0.505	0.0883	-0.030	1.40	0.548	0.353	0.0731	-0.037
1.00	0.673	0.604	0.1103	-0.039	1.40	0.659	0.429	0.0870	-0.041
1.00	0.896	0.792	0.1642	-0.055					

TABLE II.- STATIC LONGITUDINAL AERODYNAMIC DATA FOR THE BASIC MODEL AND ITS VARIOUS CONFIGURATIONS - Continued

(t) Configuration $S_1T_TT_W$-H

M	α	C_L	C_D	C_m	M	α	C_L	C_D	C_m
0.80	-01.76	-0.253	0.0376	-0.019	1.03	-01.77	-0.213	0.0682	0.020
0.80	-01.21	-0.167	0.0260	-0.010	1.03	-01.20	-0.159	0.0646	0.017
0.80	-00.10	-0.086	0.0244	0.003	1.03	-00.06	-0.050	0.0604	0.012
0.80	00.99	-0.022	0.0230	0.019	1.03	01.09	0.056	0.0608	0.007
0.80	02.10	0.054	0.0247	0.033	1.03	02.23	0.160	0.0658	0.005
0.80	03.21	0.134	0.0280	0.047	1.03	03.36	0.269	0.0751	0.001
0.80	04.33	0.217	0.0338	0.062	1.03	04.50	0.368	0.0882	-0.002
0.80	05.42	0.296	0.0435	0.073	1.03	05.62	0.467	0.1040	-0.008
0.80	06.53	0.364	0.0588	0.079	1.03	06.74	0.560	0.1235	-0.016
					1.03	08.96	0.735	0.1723	-0.029
0.85	-01.79	-0.223	0.0325	-0.013	1.05	-01.76	-0.205	0.0689	0.016
0.85	-01.23	-0.176	0.0290	-0.007	1.05	-01.19	-0.150	0.0651	0.014
0.85	-00.11	-0.095	0.0255	0.006	1.05	-00.06	-0.049	0.0616	0.010
0.85	00.99	-0.029	0.0241	0.024	1.05	01.08	0.058	0.0622	0.006
0.85	02.11	0.051	0.0255	0.039	1.05	02.22	0.159	0.0673	0.003
0.85	03.23	0.138	0.0292	0.053	1.05	03.35	0.259	0.0758	0.000
0.85	04.36	0.222	0.0363	0.067	1.05	04.49	0.364	0.0885	-0.005
0.85	05.47	0.311	0.0484	0.075	1.05	05.62	0.465	0.1047	-0.010
0.85	06.58	0.398	0.0651	0.076	1.05	06.74	0.557	0.1232	-0.016
					1.05	08.96	0.725	0.1784	-0.027
0.90	-01.81	-0.240	0.0364	-0.002	1.10	-01.77	-0.205	0.0663	0.014
0.90	-01.24	-0.192	0.0324	0.003	1.10	-01.20	-0.155	0.0628	0.013
0.90	-00.11	-0.110	0.0292	0.020	1.10	-00.07	-0.056	0.0585	0.007
0.90	01.01	-0.041	0.0274	0.040	1.10	01.05	0.046	0.0585	0.001
0.90	02.13	0.045	0.0284	0.054	1.10	02.19	0.146	0.0628	-0.001
0.90	03.26	0.134	0.0330	0.068	1.10	03.33	0.244	0.0714	-0.004
0.90	04.40	0.229	0.0416	0.077	1.10	04.46	0.340	0.0831	-0.005
0.90	05.51	0.319	0.0555	0.076	1.10	05.59	0.443	0.0993	-0.011
0.90	06.60	0.388	0.0719	0.079	1.10	06.72	0.538	0.1182	-0.018
					1.10	08.94	0.708	0.1645	-0.026
0.95	-01.78	-0.225	0.0449	0.010	1.20	-01.73	-0.161	0.0645	0.005
0.95	-01.21	-0.177	0.0415	0.014	1.20	-01.18	-0.119	0.0614	0.003
0.95	-00.07	-0.075	0.0374	0.020	1.20	-00.05	-0.032	0.0581	0.000
0.95	01.07	0.025	0.0367	0.029	1.20	01.08	0.061	0.0585	-0.006
0.95	02.20	0.113	0.0394	0.039	1.20	02.20	0.153	0.0628	-0.011
0.95	03.34	0.223	0.0483	0.037	1.20	03.32	0.239	0.0705	-0.015
0.95	04.47	0.320	0.0599	0.040	1.20	04.44	0.327	0.0814	-0.021
0.95	05.59	0.426	0.0777	0.033	1.20	05.56	0.416	0.0950	-0.027
0.95	06.71	0.520	0.0970	0.031	1.20	06.68	0.505	0.1117	-0.032
					1.20	08.92	0.668	0.1535	-0.034
0.98	-01.80	-0.232	0.0550	0.008	1.30	-01.73	-0.161	0.0624	0.013
0.98	-01.22	-0.172	0.0495	0.007	1.30	-01.18	-0.123	0.0593	0.011
0.98	-00.07	-0.062	0.0452	0.013	1.30	-00.06	-0.043	0.0556	0.006
0.98	01.09	0.047	0.0463	0.017	1.30	01.06	0.040	0.0554	0.001
0.98	02.21	0.150	0.0515	0.017	1.30	02.17	0.122	0.0584	-0.002
0.98	03.35	0.252	0.0609	0.015	1.30	03.29	0.203	0.0647	-0.006
0.98	04.49	0.359	0.0744	0.011	1.30	04.41	0.283	0.0738	-0.010
0.98	05.60	0.459	0.0917	0.004	1.30	05.51	0.362	0.0856	-0.015
0.98	06.73	0.562	0.1128	-0.003	1.30	06.63	0.442	0.1004	-0.020
0.98	08.94	0.733	0.1629	-0.011	1.30	08.85	0.597	0.1387	-0.025
					1.30	11.08	0.740	0.1872	-0.027
1.00	-01.79	-0.236	0.0611	0.016	1.40	-01.70	-0.131	0.0623	0.002
1.00	-01.22	-0.183	0.0570	0.019	1.40	-01.16	-0.094	0.0595	-0.001
1.00	-00.07	-0.061	0.0512	0.014	1.40	-00.05	-0.021	0.0559	-0.006
1.00	01.09	0.053	0.0529	0.010	1.40	01.05	0.053	0.0554	-0.010
1.00	02.22	0.158	0.0586	0.012	1.40	02.16	0.127	0.0584	-0.014
1.00	03.36	0.261	0.0688	0.011	1.40	03.27	0.202	0.0638	-0.017
1.00	04.49	0.361	0.0817	0.005	1.40	04.38	0.274	0.0723	-0.020
1.00	05.61	0.469	0.0996	-0.006	1.40	05.50	0.348	0.0831	-0.023
1.00	06.73	0.568	0.1206	-0.017	1.40	06.60	0.422	0.0963	-0.026
1.00	08.95	0.745	0.1695	-0.027					

TABLE II.- STATIC LONGITUDINAL AERODYNAMIC DATA FOR THE BASIC MODEL AND ITS VARIOUS CONFIGURATIONS - Continued

(u) Configuration S_1A

M	α	C_L	C_D	C_m	M	α	C_L	C_D	C_m
0.80	-0.163	-0.170	0.0260	0.047	1.03	-0.165	-0.234	0.0536	0.108
0.80	-0.109	-0.131	0.0235	0.039	1.03	-0.110	-0.181	0.0497	0.096
0.80	-0.003	-0.051	0.0209	0.021	1.03	0.000	-0.076	0.0458	0.070
0.80	0.102	0.013	0.0198	0.009	1.03	0.111	0.031	0.0450	0.043
0.80	0.210	0.087	0.0216	-0.003	1.03	0.220	0.138	0.0487	0.015
0.80	0.316	0.167	0.0251	-0.019	1.03	0.330	0.234	0.0548	-0.008
0.80	0.424	0.248	0.0299	-0.031	1.03	0.440	0.328	0.0639	-0.086
0.80	0.531	0.325	0.0370	-0.037	1.03	0.549	0.423	0.0765	-0.046
0.80	0.640	0.409	0.0492	-0.045	1.03	0.658	0.513	0.0925	-0.064
0.80	0.857	0.573	0.0844	-0.063	1.03	0.876	0.687	0.1347	-0.101
0.80	1.065	0.698	0.1383	-0.109	1.03	1.095	0.857	0.1914	-0.138
0.80	1.275	0.797	0.1884	-0.130					
0.80	1.482	0.860	0.2362	-0.133					
0.85	-0.165	-0.180	0.0272	0.049	1.05	-0.163	-0.217	0.0547	0.108
0.85	-0.111	-0.135	0.0245	0.040	1.05	-0.109	-0.168	0.0514	0.095
0.85	-0.004	-0.056	0.0217	0.023	1.05	0.001	-0.069	0.0475	0.069
0.85	0.103	0.011	0.0208	0.011	1.05	0.110	0.028	0.0471	0.044
0.85	0.210	0.088	0.0222	-0.003	1.05	0.220	0.137	0.0498	0.019
0.85	0.312	0.166	0.0258	-0.017	1.05	0.330	0.232	0.0563	-0.010
0.85	0.426	0.253	0.0308	-0.028	1.05	0.440	0.322	0.0649	-0.026
0.85	0.536	0.340	0.0399	-0.038	1.05	0.550	0.418	0.0775	-0.043
0.85	0.644	0.426	0.0501	-0.046	1.05	0.660	0.511	0.0938	-0.061
0.85	0.862	0.603	0.0919	-0.069	1.05	0.879	0.683	0.1352	-0.094
0.85	1.070	0.716	0.1436	-0.121	1.05	1.098	0.846	0.1901	-0.129
0.85	1.279	0.815	0.1945	-0.145					
0.85	1.488	0.884	0.2445	-0.150					
0.90	-0.165	-0.182	0.0290	0.052	1.10	-0.167	-0.235	0.0576	0.105
0.90	-0.112	-0.138	0.0260	0.043	1.10	-0.111	-0.185	0.0530	0.088
0.90	-0.003	-0.055	0.0231	0.026	1.10	-0.003	-0.091	0.0490	0.063
0.90	0.102	0.008	0.0219	0.016	1.10	0.105	0.003	0.0479	0.039
0.90	0.210	0.087	0.0233		1.10	0.216	0.101	0.0499	0.014
0.90	0.319	0.172	0.0275	-0.014	1.10	0.326	0.194	0.0557	-0.006
0.90	0.428	0.261	0.0333	-0.026	1.10	0.435	0.284	0.0644	-0.027
0.90	0.537	0.356	0.0448	-0.039	1.10	0.545	0.373	0.0762	-0.039
0.90	0.647	0.454	0.0599	-0.055	1.10	0.656	0.469	0.0921	-0.056
0.90	0.868	0.653	0.1050	-0.093	1.10	0.876	0.654	0.1335	-0.096
					1.10	1.096	0.832	0.1882	-0.137
0.95	-0.166	-0.184	0.0340	0.053	1.20	-0.163	-0.212	0.0574	0.107
0.95	-0.112	-0.142	0.0314	0.047	1.20	-0.110	-0.165	0.0539	0.089
0.95	-0.003	-0.062	0.0276	0.033	1.20	-0.002	-0.076	0.0497	0.056
0.95	0.103	0.001	0.0264	0.028	1.20	0.106	0.014	0.0491	0.023
0.95	0.213	0.072	0.0277	0.022	1.20	0.213	0.102	0.0516	-0.005
0.95	0.320	0.154	0.0314	0.006	1.20	0.322	0.190	0.0577	-0.033
0.95	0.430	0.250	0.0386	-0.012	1.20	0.431	0.280	0.0666	-0.059
0.95	0.539	0.358	0.0507	-0.038	1.20	0.531	0.365	0.0776	-0.081
0.95	0.651	0.479	0.0704	-0.067	1.20	0.649	0.457	0.0930	-0.104
0.95	0.870	0.689	0.1185	-0.118	1.20	0.868	0.631	0.1318	-0.142
0.95	1.088	0.859	0.1761	-0.153	1.20	1.084	0.801	0.1819	-0.203
0.98	-0.164	-0.196	0.0423	0.077	1.30	-0.166	-0.208	0.0567	0.090
0.98	-0.110	-0.153	0.0393	0.069	1.30	-0.113	-0.168	0.0531	0.075
0.98	-0.001	-0.064	0.0350	0.050	1.30	-0.006	-0.089	0.0488	0.047
0.98	0.106	0.007	0.0335	0.042	1.30	0.101	-0.009	0.0476	0.019
0.98	0.216	0.102	0.0371	0.026	1.30	0.210	0.074	0.0496	-0.008
0.98	0.326	0.200	0.0424	0.005	1.30	0.317	0.154	0.0542	-0.033
0.98	0.436	0.301	0.0517	-0.015	1.30	0.425	0.234	0.0620	-0.058
0.98	0.545	0.403	0.0651	-0.038	1.30	0.534	0.316	0.0727	-0.083
0.98	0.655	0.507	0.0831	-0.064	1.30	0.641	0.398	0.0860	-0.107
0.98	0.874	0.699	0.1293	-0.109	1.30	0.859	0.562	0.1222	-0.151
0.98	1.091	0.872	0.1869	-0.151	1.30	1.078	0.721	0.1702	-0.188
0.98	1.308	1.038	0.2561	-0.185					
1.00	-0.166	-0.220	0.0475	0.091	1.40	-0.163	-0.183	0.0556	0.088
1.00	-0.111	-0.172	0.0448	0.081	1.40	-0.110	-0.146	0.0526	0.074
1.00	-0.001	-0.076	0.0398	0.065	1.40	-0.003	-0.072	0.0482	0.046
1.00	0.109	0.014	0.0394	0.052	1.40	0.108	0.001	0.0474	0.018
1.00	0.219	0.117	0.0424	0.032	1.40	0.210	0.078	0.0490	-0.009
1.00	0.328	0.210	0.0481	0.010	1.40	0.317	0.154	0.0533	-0.036
1.00	0.439	0.307	0.0571	-0.010	1.40	0.424	0.230	0.0609	-0.062
1.00	0.548	0.406	0.0703	-0.033	1.40	0.531	0.304	0.0710	-0.086
1.00	0.658	0.508	0.0875	-0.059	1.40	0.639	0.380	0.0840	-0.109
1.00	0.875	0.697	0.1327	-0.104					
1.00	1.094	0.873	0.1907	-0.145					
1.00	1.311	1.033	0.2594	-0.178					

TABLE II.- STATIC LONGITUDINAL AERODYNAMIC DATA FOR THE BASIC MODEL AND ITS VARIOUS CONFIGURATIONS - Continued

(v) Configuration S_7G

M	α	C_L	C_D	C_m
0.80	-0.164	-0.168	0.0249	0.044
0.80	-0.111	-0.128	0.0227	0.036
0.80	-0.004	-0.051	0.0198	0.019
0.80	0.103	0.015	0.0190	0.008
0.80	0.209	0.089	0.0203	-0.006
0.80	0.316	0.166	0.0238	-0.020
0.80	0.424	0.248	0.0285	-0.031
0.80	0.531	0.325	0.0360	-0.039
0.80	0.640	0.407	0.0479	-0.046
0.80	0.857	0.574	0.0839	-0.067
0.80	1.066	0.704	0.1382	-0.115
0.80	1.275	0.797	0.1868	-0.131
0.80	1.484	0.863	0.2355	-0.136
0.85	-0.165	-0.172	0.0257	0.045
0.85	-0.111	-0.133	0.0235	0.039
0.85	-0.004	-0.054	0.0208	0.022
0.85	0.103	0.013	0.0196	0.010
0.85	0.210	0.091	0.0213	-0.004
0.85	0.318	0.172	0.0251	-0.020
0.85	0.427	0.258	0.0298	-0.032
0.85	0.535	0.342	0.0389	-0.040
0.85	0.645	0.429	0.0523	-0.048
0.85	0.863	0.609	0.0920	-0.072
0.90	-0.166	-0.182	0.0282	0.050
0.90	-0.112	-0.138	0.0252	0.042
0.90	-0.004	-0.055	0.0221	0.024
0.90	0.103	0.011	0.0207	0.012
0.90	0.210	0.092	0.0225	-0.003
0.90	0.319	0.176	0.0263	-0.017
0.90	0.429	0.266	0.0319	-0.029
0.90	0.538	0.357	0.0430	-0.043
0.90	0.648	0.459	0.0586	-0.060
0.90	0.867	0.652	0.1029	-0.096
0.95	-0.166	-0.177	0.0319	0.048
0.95	-0.112	-0.137	0.0295	0.043
0.95	-0.003	-0.060	0.0265	0.034
0.95	0.103	0.004	0.0249	0.026
0.95	0.212	0.075	0.0257	0.018
0.95	0.321	0.158	0.0300	0.004
0.95	0.431	0.255	0.0382	-0.012
0.95	0.540	0.360	0.0498	-0.038
0.95	0.652	0.481	0.0689	-0.068
0.95	0.872	0.693	0.1180	-0.122
0.95	1.091	0.864	0.1761	-0.157
0.95	1.308	0.997	0.2389	-0.173
0.98	-0.164	-0.193	0.0404	0.075
0.98	-0.110	-0.146	0.0365	0.065
0.98	-0.001	-0.064	0.0339	0.052
0.98	0.107	0.011	0.0328	0.041
0.98	0.217	0.107	0.0355	0.024
0.98	0.326	0.200	0.0414	0.004
0.98	0.437	0.299	0.0494	-0.016
0.98	0.546	0.400	0.0618	-0.039
0.98	0.656	0.503	0.0806	-0.063
0.98	0.876	0.699	0.1268	-0.112
0.98	1.093	0.871	0.1848	-0.152
0.98	1.310	1.035	0.2536	-0.185
1.00	-0.166	-0.214	0.0460	0.086
1.00	-0.111	-0.164	0.0427	0.076
1.00	0.000	-0.074	0.0393	0.066
1.00	0.109	0.013	0.0379	0.051
1.00	0.219	0.117	0.0407	0.029
1.00	0.329	0.208	0.0470	0.011
1.00	0.439	0.305	0.0552	-0.011
1.00	0.549	0.405	0.0685	-0.034
1.00	0.658	0.502	0.0848	-0.058
1.00	0.877	0.692	0.1299	-0.104
1.00	1.095	0.869	0.1881	-0.145
1.03	-0.166	-0.230	0.0503	0.099
1.03	-0.110	-0.176	0.0465	0.087
1.03	0.000	-0.068	0.0422	0.063
1.03	0.111	0.038	0.0428	0.040
1.03	0.221	0.139	0.0461	0.016
1.03	0.331	0.234	0.0528	-0.006
1.03	0.441	0.329	0.0618	-0.025
1.03	0.551	0.420	0.0743	-0.046
1.03	0.660	0.512	0.0901	-0.064
1.03	0.878	0.687	0.1320	-0.102
1.03	1.097	0.856	0.1882	-0.138
1.05	-0.165	-0.217	0.0503	0.101
1.05	-0.109	-0.163	0.0476	0.088
1.05	0.001	-0.068	0.0438	0.066
1.05	0.111	0.034	0.0438	0.041
1.05	0.221	0.135	0.0463	0.015
1.05	0.330	0.232	0.0529	-0.009
1.05	0.441	0.322	0.0619	-0.027
1.05	0.550	0.417	0.0742	-0.045
1.05	0.661	0.509	0.0904	-0.063
1.05	0.881	0.682	0.1321	-0.097
1.05	1.098	0.844	0.1861	-0.131
1.10	-0.168	-0.237	0.0549	0.099
1.10	-0.114	-0.185	0.0510	0.081
1.10	-0.004	-0.068	0.0457	0.054
1.10	0.106	0.008	0.0448	0.030
1.10	0.215	0.103	0.0479	0.009
1.10	0.326	0.196	0.0536	-0.009
1.10	0.436	0.285	0.0625	-0.026
1.10	0.548	0.381	0.0746	-0.039
1.10	0.656	0.467	0.0901	-0.060
1.10	0.876	0.656	0.1317	-0.098
1.10	1.096	0.833	0.1863	-0.141
1.20	-0.166	-0.219	0.0550	0.102
1.20	-0.112	-0.174	0.0514	0.085
1.20	-0.004	-0.084	0.0468	0.053
1.20	0.104	0.006	0.0458	0.020
1.20	0.212	0.098	0.0481	-0.009
1.20	0.321	0.191	0.0539	-0.037
1.20	0.430	0.277	0.0628	-0.061
1.20	0.539	0.365	0.0749	-0.083
1.20	0.649	0.451	0.0895	-0.102
1.20	0.868	0.624	0.1281	-0.141
1.20	1.084	0.795	0.1782	-0.202
1.30	-0.168	-0.215	0.0544	0.087
1.30	-0.115	-0.174	0.0506	0.072
1.30	-0.008	-0.096	0.0462	0.043
1.30	0.100	-0.016	0.0446	0.015
1.30	0.207	0.065	0.0459	-0.012
1.30	0.315	0.148	0.0504	-0.039
1.30	0.424	0.231	0.0581	-0.065
1.30	0.532	0.311	0.0683	-0.090
1.30	0.640	0.395	0.0821	-0.114
1.30	0.859	0.559	0.1184	-0.156
1.30	1.067	0.667	0.1580	-0.208
1.40	-0.165	-0.191	0.0536	0.085
1.40	-0.112	-0.154	0.0504	0.071
1.40	-0.005	-0.082	0.0461	0.044
1.40	0.100	-0.008	0.0446	0.016
1.40	0.209	0.067	0.0457	-0.011
1.40	0.315	0.145	0.0502	-0.040
1.40	0.422	0.221	0.0571	-0.066
1.40	0.528	0.297	0.0669	-0.092
1.40	0.636	0.373	0.0794	-0.116
1.40	0.852	0.527	0.1134	-0.159

TABLE II.- STATIC LONGITUDINAL AERODYNAMIC DATA FOR THE BASIC MODEL AND ITS VARIOUS CONFIGURATIONS - Continued

(w) Configuration S_1F_S

M	α	C_L	C_D	C_m	M	α	C_L	C_D	C_m
0.80	-0.162	-0.174	0.0728	0.064	1.03	-0.155	-0.213	0.1049	0.156
0.80	-0.109	-0.133	0.0709	0.057	1.03	-0.101	-0.175	0.1016	0.145
0.80	-0.001	-0.060	0.0684	0.045	1.03	0.008	-0.085	0.0987	0.128
0.80	0.104	-0.002	0.0667	0.036	1.03	0.114	-0.010	0.0977	0.109
0.80	0.209	0.055	0.0660	0.023	1.03	0.221	0.064	0.0957	0.078
0.80	0.315	0.130	0.0678	0.008	1.03	0.327	0.155	0.1001	0.045
0.80	0.423	0.209	0.0724	-0.004	1.03	0.436	0.251	0.1070	0.013
0.80	0.530	0.290	0.0787	-0.011	1.03	0.545	0.352	0.1193	-0.015
0.80	0.639	0.375	0.0899	-0.020	1.03	0.654	0.444	0.1347	-0.037
0.80	0.854	0.531	0.1308	-0.054	1.03	0.874	0.618	0.1762	-0.070
0.80	1.062	0.649	0.1735	-0.096	1.03	1.092	0.779	0.2286	-0.100
0.80	1.270	0.743	0.2167	-0.119					
0.80	1.480	0.869	0.2629	-0.122					
0.85	-0.162	-0.178	0.0747	0.069	1.05	-0.152	-0.192	0.1072	0.162
0.85	-0.109	-0.140	0.0729	0.062	1.05	-0.099	-0.162	0.1040	0.155
0.85	-0.001	-0.064	0.0707	0.050	1.05	0.010	-0.071	0.1015	0.130
0.85	0.105	-0.003	0.0691	0.038	1.05	0.117	0.012	0.1006	0.104
0.85	0.209	0.054	0.0682	0.025	1.05	0.223	0.081	0.0988	0.073
0.85	0.316	0.129	0.0698	0.010	1.05	0.329	0.169	0.1028	0.041
0.85	0.425	0.216	0.0740	-0.002	1.05	0.438	0.264	0.1099	0.008
0.85	0.534	0.304	0.0828	-0.011	1.05	0.546	0.354	0.1214	-0.019
0.85	0.643	0.392	0.0962	-0.021	1.05	0.655	0.445	0.1374	-0.040
0.85	0.861	0.563	0.1320	-0.045	1.05	0.874	0.615	0.1782	-0.068
0.85	1.064	0.660	0.1776	-0.109	1.05	1.093	0.768	0.2299	-0.090
0.85	1.273	0.758	0.2216	-0.132					
0.85	1.484	0.846	0.2700	-0.141					
0.90	-0.163	-0.185	0.0795	0.075	1.10	-0.102	-0.187	0.1053	0.156
0.90	-0.109	-0.144	0.0769	0.067	1.10	0.006	-0.096	0.1019	0.128
0.90	-0.001	-0.061	0.0749	0.049	1.10	0.113	-0.014	0.1000	0.101
0.90	0.106	-0.003	0.0728	0.042	1.10	0.221	0.074	0.0979	0.064
0.90	0.209	0.050	0.0715	0.028	1.10	0.328	0.159	0.1017	0.040
0.90	0.318	0.132	0.0736	0.013	1.10	0.437	0.246	0.1094	0.019
0.90	0.428	0.223	0.0791	0.002	1.10	0.548	0.337	0.1211	0.000
0.90	0.537	0.311	0.0885	-0.009	1.10	0.657	0.429	0.1378	-0.018
0.90	0.647	0.410	0.1027	-0.025	1.10	0.876	0.615	0.1787	-0.071
0.90	0.865	0.601	0.1437	-0.064	1.10	1.092	0.774	0.2292	-0.115
0.95	-0.163	-0.193	0.0860	0.083	1.20	-0.153	-0.200	0.1112	0.165
0.95	-0.110	-0.151	0.0843	0.074	1.20	-0.100	-0.165	0.1073	0.153
0.95	-0.002	-0.073	0.0816	0.056	1.20	0.009	-0.081	0.1032	0.126
0.95	0.105	-0.007	0.0802	0.044	1.20	0.115	0.001	0.1008	0.098
0.95	0.210	0.046	0.0784	0.035	1.20	0.223	0.076	0.0993	0.067
0.95	0.318	0.126	0.0807	0.017	1.20	0.329	0.160	0.1021	0.038
0.95	0.429	0.224	0.0866	0.000	1.20	0.438	0.245	0.1089	0.009
0.95	0.538	0.321	0.0981	-0.017	1.20	0.545	0.326	0.1189	-0.014
0.95	0.648	0.422	0.1137	-0.038	1.20	0.654	0.411	0.1328	-0.038
0.95	0.865	0.604	0.1542	-0.089	1.20	0.870	0.586	0.1704	-0.103
0.95	1.082	0.771	0.2068	-0.123	1.20	1.086	0.751	0.2209	-0.158
0.98	-0.161	-0.204	0.0931	0.107	1.30	-0.102	-0.157	0.1044	0.131
0.98	-0.108	-0.158	0.0898	0.087	1.30	0.006	-0.077	0.1002	0.108
0.98	-0.001	-0.074	0.0858	0.061	1.30	0.114	-0.009	0.0972	0.087
0.98	0.104	-0.005	0.0854	0.041	1.30	0.219	0.063	0.0951	0.058
0.98	0.210	0.045	0.0842	0.036	1.30	0.326	0.140	0.0972	0.030
0.98	0.305	0.103	0.0862	0.027	1.30	0.434	0.218	0.1032	0.002
0.98	0.427	0.202	0.0924	0.010	1.30	0.540	0.296	0.1130	-0.024
0.98	0.536	0.306	0.1032	-0.011	1.30	0.648	0.373	0.1267	-0.048
0.98	0.645	0.398	0.1188	-0.032					
0.98	0.865	0.594	0.1605	-0.080					
0.98	1.083	0.777	0.2153	-0.115					
1.00	-0.158	-0.199	0.0994	0.127	1.40	-0.153	-0.161	0.1068	0.129
1.00	-0.106	-0.172	0.0966	0.118	1.40	-0.101	-0.139	0.1022	0.123
1.00	0.002	-0.087	0.0925	0.094	1.40	0.006	-0.068	0.0983	0.103
1.00	0.108	-0.021	0.0913	0.076	1.40	0.114	-0.004	0.0966	0.088
1.00	0.213	0.032	0.0893	0.055	1.40	0.219	0.061	0.0934	0.068
1.00	0.320	0.119	0.0918	0.028	1.40	0.325	0.134	0.0947	0.042
1.00	0.429	0.215	0.0985	0.005	1.40	0.431	0.207	0.0998	0.013
1.00	0.538	0.316	0.1095	-0.021	1.40	0.537	0.279	0.1091	-0.013
1.00	0.648	0.420	0.1261	-0.046	1.40	0.644	0.351	0.1218	-0.037
1.00	0.869	0.607	0.1671	-0.084	1.40	0.858	0.499	0.1558	-0.084
1.00	1.088	0.782	0.2221	-0.111					

TABLE II.- STATIC LONGITUDINAL AERODYNAMIC DATA FOR THE BASIC MODEL AND ITS VARIOUS CONFIGURATIONS - Continued

(x) Configuration S_1F_U

M	α	C_L	C_D	C_m
0.80	-0.148	-0.061	0.0628	0.078
0.80	-0.094	-0.024	0.0618	0.072
0.80	0.012	0.050	0.0602	0.057
0.80	0.118	0.120	0.0617	0.047
0.80	0.225	0.199	0.0645	0.030
0.80	0.333	0.275	0.0691	0.020
0.80	0.440	0.350	0.0763	0.010
0.80	0.549	0.429	0.0877	0.003
0.80	0.657	0.510	0.1028	-0.004
0.80	0.869	0.665	0.1517	-0.042
0.80	1.081	0.794	0.2039	-0.073
0.80	1.289	0.880	0.2563	-0.089
0.85	-0.147	-0.055	0.0650	0.081
0.85	-0.094	-0.016	0.0638	0.072
0.85	0.014	0.066	0.0608	0.055
0.85	0.119	0.139	0.0640	0.042
0.85	0.226	0.215	0.0671	0.027
0.85	0.334	0.292	0.0717	0.018
0.85	0.442	0.372	0.0806	0.008
0.85	0.549	0.459	0.0935	-0.002
0.85	0.658	0.542	0.1096	-0.010
0.85	0.875	0.715	0.1544	-0.033
0.85	1.081	0.826	0.2121	-0.084
0.90	-0.145	-0.050	0.0683	0.089
0.90	-0.092	-0.008	0.0673	0.078
0.90	0.016	0.076	0.0660	0.058
0.90	0.122	0.152	0.0678	0.043
0.90	0.229	0.231	0.0713	0.028
0.90	0.338	0.333	0.0775	0.017
0.90	0.447	0.403	0.0878	0.005
0.90	0.555	0.495	0.1021	-0.007
0.90	0.665	0.597	0.1222	-0.025
0.90	0.884	0.789	0.1736	-0.061
0.95	-0.143	-0.041	0.0755	0.092
0.95	-0.090	0.000	0.0742	0.083
0.95	0.018	0.085	0.0724	0.062
0.95	0.125	0.168	0.0748	0.049
0.95	0.233	0.250	0.0788	0.034
0.95	0.342	0.342	0.0864	0.020
0.95	0.452	0.443	0.0993	0.001
0.95	0.561	0.552	0.1179	-0.024
0.95	0.670	0.659	0.1401	-0.051
0.95	0.886	0.847	0.1929	-0.097
0.95	1.104	1.016	0.2571	-0.127
0.98	-0.142	-0.044	0.0818	0.105
0.98	-0.088	0.003	0.0792	0.091
0.98	0.020	0.092	0.0789	0.070
0.98	0.128	0.182	0.0821	0.051
0.98	0.236	0.274	0.0877	0.031
0.98	0.346	0.372	0.0968	0.013
0.98	0.456	0.474	0.1117	-0.007
0.98	0.564	0.570	0.1297	-0.027
0.98	0.674	0.664	0.1507	-0.046
0.98	0.891	0.841	0.2012	-0.087
0.98	1.105	0.998	0.2627	-0.125
1.00	-0.140	-0.045	0.0857	0.112
1.00	-0.085	0.000	0.0845	0.103
1.00	0.024	0.094	0.0837	0.077
1.00	0.133	0.191	0.0865	0.051
1.00	0.242	0.283	0.0928	0.030
1.00	0.351	0.380	0.1023	0.007
1.00	0.462	0.475	0.1162	-0.011
1.00	0.571	0.571	0.1346	-0.030
1.00	0.681	0.664	0.1557	-0.048
1.00	0.900	0.835	0.2073	-0.088
1.03	-0.140	-0.045	0.0926	0.110
1.03	-0.084	0.000	0.0917	0.102
1.03	0.025	0.096	0.0912	0.080
1.03	0.134	0.187	0.0931	0.055
1.03	0.242	0.276	0.0992	0.031
1.03	0.351	0.376	0.1081	-0.001
1.03	0.461	0.468	0.1224	-0.020
1.03	0.570	0.559	0.1399	-0.038
1.03	0.681	0.648	0.1608	-0.053
1.03	0.898	0.811	0.2095	-0.088
1.05	-0.138	-0.039	0.0947	0.116
1.05	-0.083	0.009	0.0938	0.106
1.05	0.027	0.104	0.0934	0.083
1.05	0.136	0.191	0.0971	0.066
1.05	0.244	0.276	0.1025	0.043
1.05	0.353	0.366	0.1113	0.018
1.05	0.462	0.455	0.1233	-0.008
1.05	0.571	0.547	0.1398	-0.032
1.05	0.680	0.635	0.1600	-0.053
1.05	0.899	0.800	0.2088	-0.092
1.10	-0.142	-0.058	0.0956	0.109
1.10	-0.088	-0.015	0.0948	0.102
1.10	0.023	0.080	0.0953	0.086
1.10	0.132	0.173	0.0984	0.063
1.10	0.243	0.264	0.1047	0.043
1.10	0.350	0.334	0.1078	0.017
1.10	0.460	0.443	0.1248	-0.002
1.10	0.567	0.532	0.1399	-0.029
1.10	0.676	0.623	0.1587	-0.055
1.10	0.891	0.789	0.2035	-0.109
1.10	1.105	0.938	0.2602	-0.159
1.20	-0.147	-0.068	0.0987	0.081
1.20	-0.093	-0.021	0.0973	0.068
1.20	0.016	0.071	0.0966	0.041
1.20	0.125	0.163	0.0996	0.017
1.20	0.235	0.255	0.1059	-0.008
1.20	0.345	0.342	0.1142	-0.028
1.20	0.454	0.429	0.1243	-0.054
1.20	0.562	0.516	0.1374	-0.082
1.30	-0.155	-0.084	0.0970	0.053
1.30	-0.101	-0.044	0.0951	0.040
1.30	0.008	0.040	0.0939	0.014
1.30	0.115	0.123	0.0959	-0.010
1.30	0.225	0.209	0.1008	-0.034
1.40	-0.155	-0.082	0.0977	0.045
1.40	-0.103	-0.046	0.0960	0.033
1.40	0.004	0.029	0.0948	0.007
1.40	0.111	0.106	0.0961	-0.019
1.40	0.218	0.185	0.1000	-0.045
1.40	0.327	0.265	0.1070	-0.069
1.40	0.436	0.344	0.1171	-0.091

TABLE II.- STATIC LONGITUDINAL AERODYNAMIC DATA FOR THE BASIC MODEL AND ITS VARIOUS CONFIGURATIONS - Continued

(y) Configuration S_1F_S-H

M	α	C_L	C_D	C_m	M	α	C_L	C_D	C_m
0.80	-01.68	-0.138	0.0712	-0.020	1.03	-0117	-0113	0.0974	-0.004
0.80	-0114	-0.098	0.0693	-0.014	1.03	-0004	-0.032	0.0959	0.005
0.80	-0005	-0.038	0.0679	-0.002	1.03	0105	0.026	0.0963	0.020
0.80	0103	0.007	0.0668	0.015	1.03	0216	0.082	0.0948	0.035
0.80	0209	0.049	0.0662	0.034	1.03	0327	0.152	0.0976	0.041
0.80	0318	0.113	0.0677	0.045	1.03	0438	0.240	0.1046	0.037
0.80	0428	0.185	0.0710	0.054	1.03	0549	0.325	0.1145	0.034
0.80	0539	0.259	0.0764	0.066	1.03	0660	0.415	0.1295	0.027
0.80	0648	0.333	0.0864	0.076	1.03	0883	0.582	0.1682	0.014
0.80	0863	0.471	0.1261	0.068	1.03	1102	0.733	0.2191	0.008
0.80	10.74	0.583	0.1648	0.051					
0.80	12.84	0.671	0.2052	0.048					
0.80	14.95	0.746	0.2474	0.055					
0.85	-01.70	-0.135	0.0730	-0.022	1.05	-0116	-0100	0.0990	-0.004
0.85	-0116	-0104	0.0715	-0.016	1.05	-0003	-0.021	0.0977	0.003
0.85	-0006	-0.038	0.0701	-0.003	1.05	0107	0.047	0.0979	0.012
0.85	0103	0.007	0.0692	0.017	1.05	0216	0.098	0.0968	0.025
0.85	0210	0.048	0.0681	0.035	1.05	0327	0.170	0.1001	0.028
0.85	0320	0.113	0.0694	0.047	1.05	0439	0.250	0.1062	0.030
0.85	0431	0.190	0.0731	0.058	1.05	0551	0.335	0.1161	0.027
0.85	0542	0.268	0.0735	0.069	1.05	0661	0.420	0.1304	0.023
0.85	0652	0.347	0.0921	0.077	1.05	0882	0.583	0.1701	0.011
0.85	0873	0.508	0.1263	0.086	1.05	1103	0.730	0.2202	0.005
0.90	-01.71	-0.139	0.0765	-0.024	1.10	-01.73	-0.148	0.1036	-0.013
0.90	-0117	-0106	0.0748	-0.018	1.10	-0119	-0.186	0.1004	-0.003
0.90	-0006	-0.038	0.0733	-0.003	1.10	-0007	-0.047	0.0979	0.000
0.90	0108	0.007	0.0727	0.017	1.10	0104	0.024	0.0975	0.008
0.90	0211	0.048	0.0710	0.038	1.10	0215	0.089	0.0958	0.014
0.90	0321	0.114	0.0729	0.050	1.10	0326	0.168	0.0985	0.017
0.90	0433	0.196	0.0780	0.061	1.10	0436	0.244	0.1056	0.017
0.90	0544	0.281	0.0868	0.070	1.10	0548	0.329	0.1176	0.016
0.90	0656	0.367	0.0997	0.075	1.10	0660	0.417	0.1331	0.012
0.90	0879	0.548	0.1386	0.070	1.10	0883	0.587	0.1738	0.002
					1.10	1104	0.727	0.2212	-0.001
0.95	-01.73	-0.139	0.0820	-0.029	1.20	-0117	-0.099	0.1019	-0.007
0.95	-0118	-0108	0.0805	-0.021	1.20	-0006	-0.028	0.0993	-0.007
0.95	-0006	-0.036	0.0791	-0.005	1.20	0104	0.041	0.0981	-0.005
0.95	0103	0.009	0.0791	0.014	1.20	0214	0.102	0.0969	-0.001
0.95	0211	0.047	0.0773	0.038	1.20	0325	0.174	0.0993	-0.002
0.95	0322	0.115	0.0793	0.050	1.20	0436	0.250	0.1055	-0.005
0.95	0435	0.203	0.0852	0.058	1.20	0546	0.325	0.1154	-0.007
0.95	0547	0.294	0.0950	0.063	1.20	0658	0.400	0.1281	-0.007
0.95	0658	0.384	0.1090	0.061	1.20	0880	0.550	0.1629	-0.014
0.95	0879	0.550	0.1471	0.048	1.20	1102	0.695	0.2097	-0.015
0.98	-01.73	-0.143	0.0877	-0.026	1.30	-0117	-0.109	0.0991	0.006
0.98	-0119	-0114	0.0876	-0.018	1.30	-0006	-0.040	0.0957	0.005
0.98	-0007	-0.043	0.0855	-0.005	1.30	0104	0.022	0.0948	0.008
0.98	0103	0.007	0.0861	0.017	1.30	0213	0.078	0.0922	0.011
0.98	0211	0.044	0.0835	0.040	1.30	0323	0.146	0.0940	0.007
0.98	0323	0.115	0.0843	0.055	1.30	0433	0.214	0.0995	0.002
0.98	0434	0.189	0.0901	0.060	1.30	0542	0.283	0.1091	-0.001
0.98	0546	0.282	0.1005	0.057	1.30	0653	0.355	0.1207	-0.006
0.98	0656	0.369	0.1141	0.053	1.30	0875	0.502	0.1551	-0.017
0.98	0879	0.551	0.1531	0.037					
1.00	-0119	-0.116	0.0929	-0.013	1.40	-01.69	-0.118	0.1013	0.001
1.00	-0006	-0.045	0.0913	0.002	1.40	-0115	-0.093	0.0966	0.005
1.00	0104	0.004	0.0908	0.024	1.40	-0005	-0.031	0.0937	0.003
1.00	0212	0.035	0.0879	0.050	1.40	0105	0.027	0.0926	0.005
1.00	0322	0.106	0.0901	0.057	1.40	0213	0.081	0.0903	0.007
1.00	0435	0.196	0.0961	0.056	1.40	0323	0.146	0.0918	0.003
1.00	0546	0.291	0.1068	0.048	1.40	0432	0.211	0.0964	-0.002
1.00	0657	0.383	0.1201	0.041	1.40	0543	0.274	0.1052	-0.005
1.00	0881	0.566	0.1597	0.027	1.40	0652	0.342	0.1168	-0.008
1.00	1102	0.735	0.2124	0.017					

TABLE II.- STATIC LONGITUDINAL AERODYNAMIC DATA FOR THE BASIC MODEL AND ITS VARIOUS CONFIGURATIONS - Concluded

(z) Configuration S_1F_U-H

M	α	C_L	C_D	C_m	M	α	C_L	C_D	C_m
0.80	-0.155	-0.011	0.0607	-0.025	1.03	-0.157	0.022	0.0866	-0.058
0.80	-0.101	0.024	0.0603	-0.019	1.03	-0.101	0.063	0.0866	-0.051
0.80	0.008	0.085	0.0593	-0.010	1.03	0.011	0.143	0.0871	-0.046
0.80	0.115	0.144	0.0616	0.002	1.03	0.123	0.225	0.0912	-0.043
0.80	0.224	0.206	0.0646	0.014	1.03	0.234	0.305	0.0978	-0.041
0.80	0.334	0.270	0.0691	0.027	1.03	0.345	0.386	0.1061	-0.040
0.80	0.444	0.338	0.0749	0.042	1.03	0.457	0.475	0.1189	-0.044
0.80	0.553	0.407	0.0855	0.055	1.03	0.568	0.559	0.1351	-0.047
0.80	0.663	0.481	0.0996	0.065	1.03	0.679	0.642	0.1539	-0.049
0.80	0.877	0.624	0.1467	0.049	1.03	0.899	0.793	0.2020	-0.056
0.80	1.091	0.746	0.1968	0.036					
0.85	-0.155	-0.005	0.0630	-0.029	1.05	-0.156	0.029	0.0872	-0.058
0.85	-0.101	0.028	0.0618	-0.023	1.05	-0.100	0.073	0.0878	-0.054
0.85	0.009	0.097	0.0614	-0.014	1.05	0.013	0.157	0.0890	-0.051
0.85	0.117	0.160	0.0636	-0.002	1.05	0.124	0.235	0.0931	-0.049
0.85	0.227	0.224	0.0674	0.010	1.05	0.234	0.310	0.0997	-0.046
0.85	0.337	0.290	0.0719	0.024	1.05	0.346	0.390	0.1082	-0.044
0.85	0.448	0.361	0.0795	0.039	1.05	0.457	0.468	0.1201	-0.044
0.85	0.558	0.437	0.0918	0.050	1.05	0.568	0.555	0.1356	-0.050
0.85	0.669	0.514	0.1071	0.059	1.05	0.678	0.636	0.1547	-0.055
0.85	0.889	0.679	0.1512	0.063	1.05	0.898	0.787	0.2014	-0.063
0.90	-0.155	0.008	0.0650	-0.033	1.10	-0.161	0.012	0.0882	-0.072
0.90	-0.100	0.041	0.0643	-0.028	1.10	-0.105	0.052	0.0880	-0.068
0.90	0.010	0.106	0.0638	-0.018	1.10	0.009	0.137	0.0900	-0.060
0.90	0.120	0.175	0.0672	-0.008	1.10	0.120	0.216	0.0941	-0.056
0.90	0.230	0.243	0.0714	0.005	1.10	0.232	0.301	0.1009	-0.053
0.90	0.341	0.313	0.0774	0.019	1.10	0.344	0.381	0.1101	-0.050
0.90	0.453	0.393	0.0871	0.031	1.10	0.456	0.461	0.1223	-0.050
0.90	0.565	0.477	0.1005	0.039	1.10	0.567	0.543	0.1371	-0.052
0.90	0.677	0.575	0.1211	0.037	1.10	0.678	0.624	0.1558	-0.054
0.90	0.898	0.748	0.1696	0.030	1.10	0.898	0.769	0.1994	-0.061
0.95	-0.155	0.013	0.0684	-0.041	1.20	-0.164	-0.007	0.0910	-0.073
0.95	-0.100	0.050	0.0684	-0.036	1.20	-0.109	0.036	0.0900	-0.075
0.95	0.011	0.120	0.0686	-0.025	1.20	0.003	0.117	0.0913	-0.077
0.95	0.122	0.196	0.0719	-0.016	1.20	0.115	0.198	0.0958	-0.078
0.95	0.232	0.268	0.0768	-0.006	1.20	0.227	0.283	0.1024	-0.081
0.95	0.345	0.351	0.0844	0.003	1.20	0.338	0.358	0.1106	-0.082
0.95	0.457	0.444	0.0966	0.005	1.20	0.450	0.440	0.1211	-0.083
0.95	0.569	0.549	0.1151	-0.004	1.20	0.561	0.517	0.1340	-0.082
0.95	0.681	0.652	0.1389	-0.016	1.20	0.673	0.594	0.1507	-0.081
0.95	0.901	0.824	0.1909	-0.026	1.20	0.896	0.747	0.1933	-0.079
0.98	-0.156	0.023	0.0737	-0.052	1.30	-0.166	-0.045	0.0903	-0.050
0.98	-0.101	0.059	0.0731	-0.047	1.30	-0.112	-0.007	0.0888	-0.052
0.98	0.011	0.134	0.0742	-0.037	1.30	-0.001	0.069	0.0882	-0.057
0.98	0.123	0.218	0.0777	-0.033	1.30	0.110	0.145	0.0909	-0.063
0.98	0.234	0.298	0.0835	-0.027	1.30	0.221	0.222	0.0962	-0.067
0.98	0.347	0.389	0.0930	-0.027	1.30	0.332	0.299	0.1050	-0.071
0.98	0.468	0.488	0.1077	-0.030	1.30	0.444	0.374	0.1155	-0.073
0.98	0.572	0.578	0.1253	-0.033					
0.98	0.682	0.666	0.1462	-0.036					
0.98	0.904	0.829	0.1970	-0.043					
1.00	-0.156	0.027	0.0799	-0.058	1.40	-0.167	-0.046	0.0914	-0.048
1.00	-0.101	0.065	0.0797	-0.053	1.40	-0.112	-0.012	0.0894	-0.050
1.00	0.011	0.146	0.0791	-0.048	1.40	-0.002	0.056	0.0885	-0.055
1.00	0.123	0.230	0.0834	-0.046	1.40	0.108	0.124	0.0907	-0.060
1.00	0.233	0.311	0.0911	-0.043	1.40	0.219	0.194	0.0948	-0.065
1.00	0.346	0.398	0.0997	-0.039	1.40	0.328	0.266	0.1021	-0.070
1.00	0.458	0.489	0.1133	-0.040	1.40	0.439	0.337	0.1117	-0.075
1.00	0.569	0.576	0.1298	-0.041					
1.00	0.680	0.656	0.1509	-0.043					
1.00	0.901	0.819	0.2002	-0.050					

TABLE III.- STATIC LATERAL-DIRECTIONAL AERODYNAMIC DATA FOR THE BASIC MODEL WITH AND WITHOUT THE EMPENNAGE

(a) S_1 for $\alpha \doteq 3^{\circ}$

M	α	β	C_L	C_D	C_m	C_l	C_c	C_n
0.80	0.66	-05.00	0.155	0.0288	-0.030	0.0116	0.096	-0.0310
0.80	0.66	-04.00	0.154	0.0261	-0.025	0.0088	0.073	-0.0229
0.80	0.66	-03.00	0.152	0.0245	-0.023	0.0065	0.054	-0.0165
0.80	0.66	-02.00	0.152	0.0236	-0.022	0.0042	0.037	-0.0113
0.80	0.66	-01.50	0.150	0.0232	-0.022	0.0031	0.029	-0.0088
0.80	0.66	-01.00	0.150	0.0229	-0.021	0.0021	0.019	-0.0058
0.80	0.66	-00.50	0.151	0.0229	-0.022	0.0006	0.010	-0.0022
0.80	0.66	-00.01	0.151	0.0229	-0.022	-0.0010	-0.001	0.0019
0.80	0.66	00.49	0.151	0.0230	-0.022	-0.0023	-0.010	0.0057
0.80	0.66	00.99	0.150	0.0231	-0.020	-0.0037	-0.020	0.0091
0.80	0.66	01.49	0.150	0.0232	-0.020	-0.0052	-0.028	0.0115
0.80	0.66	01.98	0.150	0.0235	-0.020	-0.0060	-0.036	0.0138
0.80	0.66	02.99	0.150	0.0245	-0.023	-0.0082	-0.053	0.0187
0.80	0.66	03.99	0.153	0.0264	-0.026	-0.0105	-0.072	0.0251
0.80	0.66	04.99	0.154	0.0292	-0.030	-0.0127	-0.092	0.0320
0.80	0.65	05.98	0.155	0.0327	-0.036	-0.0153	-0.111	0.0379
0.80	0.65	06.99	0.160	0.0368	-0.042	-0.0164	-0.129	0.0428
0.80	0.65	08.00	0.165	0.0414	-0.050	-0.0177	-0.146	0.0469
0.90	0.69	-04.99	0.161	0.0311	-0.027	0.0132	0.100	-0.0339
0.90	0.69	-03.99	0.158	0.0280	-0.021	0.0101	0.077	-0.0255
0.90	0.69	-02.99	0.157	0.0265	-0.018	0.0074	0.057	-0.0183
0.90	0.69	-02.00	0.157	0.0253	-0.015	0.0043	0.037	-0.0114
0.90	0.69	-01.50	0.155	0.0250	-0.016	0.0035	0.029	-0.0091
0.90	0.69	-00.50	0.156	0.0251	-0.015	0.0007	0.010	-0.0024
0.90	0.69	-01.00	0.155	0.0245	-0.015	0.0023	0.019	-0.0060
0.90	0.68	-00.01	0.152	0.0246	-0.015	-0.0009	.000	0.0013
0.90	0.68	00.48	0.154	0.0249	-0.014	-0.0027	-0.010	0.0057
0.90	0.69	00.99	0.155	0.0250	-0.014	-0.0037	-0.019	0.0090
0.90	0.68	01.98	0.152	0.0255	-0.015	-0.0063	-0.037	0.0146
0.90	0.68	01.48	0.154	0.0249	-0.014	-0.0051	-0.029	0.0122
0.90	0.69	02.98	0.155	0.0264	-0.016	-0.0091	-0.056	0.0210
0.90	0.68	03.98	0.155	0.0282	-0.020	-0.0118	-0.077	0.0283
0.90	0.68	04.98	0.158	0.0312	-0.028	-0.0145	-0.098	0.0363
0.90	0.68	05.97	0.164	0.0348	-0.040	-0.0167	-0.118	0.0422
0.90	0.68	06.98	0.169	0.0395	-0.047	-0.0181	-0.135	0.0462
0.90	0.67	07.99	0.173	0.0446	-0.062	-0.0196	-0.152	-0.0506
1.00	0.77	-04.96	0.204	0.0546	-0.007	0.0179	0.113	-0.0448
1.01	0.78	-03.97	0.203	0.0519	-0.000	0.0142	0.089	-0.0350
1.00	0.77	-02.97	0.198	0.0488	0.007	0.0102	0.066	-0.0255
1.00	0.78	-01.98	0.199	0.0477	0.014	0.0063	0.044	-0.0168
1.00	0.78	-01.49	0.197	0.0471	0.015	0.0046	0.034	-0.0125
1.00	0.77	-01.00	0.193	0.0468	0.017	0.0026	0.024	-0.0082
1.00	0.78	-00.50	0.194	0.0466	0.017	0.0007	0.012	-0.0035
1.00	0.78	-00.01	0.195	0.0463	0.018	-0.0012	0.001	0.0014
1.00	0.78	00.48	0.194	0.0470	0.018	-0.0033	-0.009	0.0055
1.00	0.78	00.98	0.194	0.0471	0.018	-0.0056	-0.020	0.0104
1.00	0.78	01.47	0.195	0.0473	0.017	-0.0072	-0.031	0.0147
1.00	0.78	01.96	0.195	0.0475	0.014	-0.0091	-0.042	0.0195
1.00	0.77	02.96	0.196	0.0493	0.009	-0.0129	-0.064	0.0282
1.00	0.77	03.95	0.200	0.0515	0.002	-0.0166	-0.086	0.0374
1.00	0.77	04.94	0.203	0.0546	-0.007	-0.0199	-0.110	0.0472
1.00	0.76	05.92	0.203	0.5900	-0.013	-0.0234	-0.134	0.0574
1.00	0.76	06.91	0.208	0.0647	-0.023	-0.0265	-0.157	0.0674
1.00	0.75	07.91	0.214	0.0706	-0.044	-0.0284	-0.179	0.0746
1.10	0.78	-04.94	0.196	0.0597	-0.010	0.0165	0.119	-0.0491
1.10	0.78	-03.95	0.198	0.0562	-0.008	0.0136	0.095	-0.0394
1.10	0.78	-02.96	0.196	0.0534	-0.006	0.0097	-0.071	-0.0288
1.10	0.78	-01.97	0.197	0.0517	-0.003	0.0066	0.047	-0.0189
1.10	0.78	-01.48	0.198	0.0511	-0.002	0.0048	0.035	-0.0140
1.10	0.78	-01.00	0.197	0.0508	-0.001	0.0032	0.024	-0.0089
1.10	0.78	-00.50	0.196	0.0504	-0.000	0.0014	0.013	-0.0039
1.10	0.78	-00.01	0.195	0.0502	0.001	-0.0005	0.001	0.0013
1.10	0.78	00.48	0.196	0.0506	-0.001	-0.0022	-0.009	0.0056
1.10	0.78	00.98	0.195	0.0507	-0.001	-0.0041	-0.022	0.0116
1.10	0.78	01.47	0.195	0.0511	-0.003	-0.0060	-0.033	0.0165
1.10	0.78	01.96	0.195	0.0516	-0.003	-0.0074	-0.044	0.0210
1.10	0.78	02.95	0.195	0.0534	-0.006	-0.0107	-0.068	0.0311
1.10	0.78	03.93	0.193	0.0558	-0.005	-0.0143	-0.092	0.0421
1.10	0.77	04.92	0.193	0.0592	-0.007	-0.0178	-0.114	0.0513
1.10	0.77	05.90	0.191	0.0633	-0.007	-0.0209	-0.139	0.0613
1.10	0.77	06.90	0.189	0.0683	-0.011	-0.0232	-0.160	0.0695
1.10	0.76	07.90	0.190	0.0744	-0.015	-0.0259	-0.184	0.0784

TABLE III.- STATIC LATERAL-DIRECTIONAL AERODYNAMIC DATA FOR THE BASIC MODEL WITH AND WITHOUT THE EMPENNAGE - Continued

(a) S_1 for $\alpha \doteq 3^{\circ}$ - Concluded

M	α	β	C_L	C_D	C_m	C_l	C_c	C_n
1.20	0.276	-0.495	0.177	0.0571	-0.018	0.0131	0.112	-0.0436
1.20	0.275	-0.396	0.174	0.0539	-0.017	0.0099	0.088	-0.0337
1.20	0.275	-0.297	0.173	0.0516	-0.014	0.0072	0.065	-0.0247
1.20	0.276	-0.198	0.174	0.0501	-0.013	0.0047	0.043	-0.0158
1.20	0.276	-0.149	0.176	0.0498	-0.012	0.0034	0.032	-0.0116
1.20	0.276	-0.100	0.174	0.0495	-0.012	0.0020	0.022	-0.0076
1.20	0.276	-0.050	0.175	0.0494	-0.012	0.0008	0.011	-0.0033
1.20	0.276	-0.001	0.175	0.0492	-0.012	-0.0008	0.001	0.0009
1.20	0.276	0.048	0.175	0.0494	-0.012	-0.0017	-0.009	0.0050
1.20	0.276	0.099	0.174	0.0495	-0.012	-0.0033	-0.020	0.0093
1.20	0.276	0.148	0.174	0.0499	-0.012	-0.0047	-0.030	0.0137
1.20	0.276	0.197	0.175	0.0503	-0.014	-0.0060	-0.041	0.0179
1.20	0.276	0.296	0.174	0.0518	-0.015	-0.0088	-0.062	0.0262
1.20	0.276	0.395	0.174	0.0543	-0.015	-0.0116	-0.085	0.0362
1.20	0.275	0.494	0.174	0.0574	-0.018	-0.0144	-0.108	0.0454
1.20	0.275	0.592	0.172	0.0615	-0.019	-0.0176	-0.132	0.0558
1.20	0.275	0.691	0.172	0.0665	-0.021	-0.0201	-0.156	0.0655
1.20	0.274	0.790	0.172	0.0727	-0.024	-0.0225	-0.179	0.0743
1.30	2.73	-0.496	0.161	0.0553	-0.031	0.0140	0.109	-0.0416
1.30	2.73	-0.397	0.162	0.0522	-0.032	0.0107	0.087	-0.0327
1.30	2.73	-0.298	0.162	0.0499	-0.032	0.0080	0.064	-0.0237
1.30	2.73	-0.198	0.163	0.0483	-0.032	0.0049	0.042	-0.0150
1.30	2.73	-0.149	0.162	0.0478	-0.031	0.0035	0.032	-0.0110
1.30	2.73	-0.100	0.163	0.0476	-0.032	0.0018	0.021	-0.0070
1.30	2.73	-0.050	0.164	0.0475	-0.031	0.0007	0.012	-0.0031
1.30	2.73	-0.001	0.163	0.0475	-0.031	-0.0007	0.001	0.0010
1.30	2.73	0.049	0.163	0.0476	-0.031	-0.0018	-0.009	0.0047
1.30	2.73	0.099	0.163	0.0478	-0.031	-0.0035	-0.019	0.0089
1.30	2.73	0.148	0.162	0.0481	-0.031	-0.0050	-0.030	0.0130
1.30	2.73	0.197	0.162	0.0484	-0.031	-0.0064	-0.040	0.0172
1.30	2.73	0.296	0.160	0.0501	-0.031	-0.0087	-0.062	0.0259
1.30	2.72	0.395	0.160	0.0523	-0.031	-0.0115	-0.084	0.0346
1.30	2.72	0.494	0.158	0.0554	-0.028	-0.0147	-0.107	0.0438
1.30	2.72	0.593	0.157	0.0594	-0.028	-0.0171	-0.129	0.0526
1.30	2.72	0.692	0.156	0.0643	-0.027	-0.0197	-0.151	0.0609
1.30	2.72	0.792	0.155	0.0699	-0.029	-0.0218	-0.172	0.0683
1.40	2.71	-0.496	0.150	0.0547	-0.034	0.0145	0.106	-0.0399
1.40	2.71	-0.397	0.151	0.0516	-0.035	0.0119	0.084	-0.0322
1.40	2.71	-0.297	0.153	0.0492	-0.037	0.0087	0.062	-0.0235
1.40	2.71	-0.198	0.154	0.0476	-0.038	0.0058	0.041	-0.0153
1.40	2.71	-0.149	0.153	0.0470	-0.038	0.0042	0.031	-0.0114
1.40	2.71	-0.100	0.154	0.0467	-0.039	0.0029	0.021	-0.0074
1.40	2.71	-0.050	0.154	0.0465	-0.040	0.0013	0.010	-0.0032
1.40	2.71	-0.000	0.153	0.0463	-0.039	-0.0005	0	0.0007
1.40	2.71	0.049	0.154	0.0466	-0.039	-0.0016	-0.010	0.0048
1.40	2.71	0.099	0.153	0.0469	-0.039	-0.0033	-0.020	0.0089
1.40	2.71	0.148	0.153	0.0471	-0.038	-0.0046	-0.030	0.0129
1.40	2.71	0.197	0.153	0.0476	-0.037	-0.0060	-0.040	0.0171
1.40	2.71	0.296	0.151	0.0495	-0.035	-0.0090	-0.061	0.0255
1.40	2.71	0.396	0.149	0.0518	-0.033	-0.0119	-0.081	0.0334
1.40	2.71	0.495	0.147	0.0549	-0.032	-0.0147	-0.102	0.0415
1.40	2.71	0.594	0.146	0.0588	-0.031	-0.0170	-0.124	0.0491
1.40	2.71	0.694	0.143	0.0635	-0.031	-0.0191	-0.144	0.0563
1.40	2.71	0.794	0.143	0.0692	-0.031	-0.0213	-0.165	0.0631

TABLE III.- STATIC LATERAL-DIRECTIONAL AERODYNAMIC DATA FOR THE BASIC MODEL WITH AND WITHOUT THE EMPENNAGE - Continued

(b) S_1 for $\alpha \pm 7^{\circ}$

M	α	β	C_L	C_D	C_m	C_l	C_c	C_n
0.80	07.01	-05.00	0.476	0.0673	-0.067	0.0132	0.100	-0.0342
0.80	07.01	-04.00	0.473	0.0643	-0.061	0.0105	0.079	-0.0270
0.80	07.01	-03.00	0.473	0.0621	-0.058	0.0079	0.060	-0.0208
0.80	07.01	-02.00	0.470	0.0609	-0.054	0.0050	0.041	-0.0140
0.80	07.01	-01.50	0.471	0.0605	-0.051	0.0041	0.031	-0.0101
0.80	07.01	-01.00	0.469	0.0595	-0.050	0.0028	0.022	-0.0070
0.80	07.02	-00.51	0.470	0.0595	-0.050	0.0011	0.013	-0.0030
0.80	07.01	-00.01	0.468	0.0592	-0.049	-0.0001	0.002	0.0014
0.80	07.01	00.48	0.470	0.0595	-0.049	-0.0020	-0.007	0.0055
0.80	07.01	00.98	0.467	0.0598	-0.051	-0.0028	-0.016	0.0087
0.80	07.01	01.48	0.466	0.0596	-0.052	-0.0043	-0.024	0.0117
0.80	07.01	01.98	0.467	0.0602	-0.053	-0.0056	-0.033	0.0148
0.80	07.01	02.98	0.469	0.0615	-0.057	-0.0084	-0.051	0.0214
0.80	07.00	03.98	0.468	0.0636	-0.061	-0.0109	-0.072	0.0286
0.80	07.00	04.97	0.468	0.0665	-0.067	-0.0130	-0.091	0.0358
0.80	07.00	05.97	0.470	0.0706	-0.076	-0.0159	-0.111	0.0421
0.80	06.99	06.98	0.473	0.0761	-0.087	-0.0170	-0.129	0.0474
0.80	06.99	07.98	0.474	0.0813	-0.094	-0.0186	-0.144	0.0508
0.90	07.18	-04.98	0.541	0.0832	-0.099	0.0155	0.108	-0.0393
0.90	07.18	-03.99	0.538	0.0800	-0.090	0.0129	0.086	-0.0315
0.90	07.18	-02.99	0.536	0.0776	-0.082	0.0102	0.063	-0.0236
0.90	07.13	-02.00	0.536	0.0765	-0.075	0.0074	0.043	-0.0159
0.90	07.13	-01.49	0.534	0.0755	-0.075	0.0057	0.034	-0.0122
0.90	07.18	-01.00	0.530	0.0747	-0.072	0.0040	0.024	-0.0083
0.90	07.18	-00.51	0.529	0.0743	-0.071	0.0020	0.013	-0.0035
0.90	07.18	-00.01	0.528	0.0739	-0.072	0.0002	0.003	0.0013
0.90	07.18	00.48	0.527	0.0739	-0.070	-0.0018	-0.008	0.0063
0.90	07.18	00.97	0.527	0.0741	-0.072	-0.0035	-0.017	0.0106
0.90	07.18	01.48	0.531	0.0751	-0.075	-0.0050	-0.026	0.0141
0.90	07.12	01.97	0.530	0.0754	-0.076	-0.0065	-0.035	0.0175
0.90	07.11	02.97	0.528	0.0763	-0.082	-0.0093	-0.054	0.0245
0.90	07.11	03.97	0.533	0.0793	-0.091	-0.0122	-0.076	0.0324
0.90	07.11	04.96	0.535	0.0820	-0.098	-0.0145	-0.098	0.0400
0.90	07.10	05.96	0.537	0.0862	-0.107	-0.0173	-0.118	0.0471
0.90	07.10	06.97	0.536	0.0902	-0.113	-0.0185	-0.136	0.0522
0.90	07.09	07.97	0.536	0.0956	-0.125	-0.0197	-0.153	0.0572
1.00	07.24	-04.95	0.592	0.1038	-0.104	0.0147	0.122	-0.0509
1.00	07.24	-03.96	0.593	0.1028	-0.095	0.0122	0.096	-0.0394
1.00	07.25	-02.97	0.588	0.1021	-0.087	0.0098	0.073	-0.0300
1.00	07.25	-02.00	0.586	0.1025	-0.078	0.0067	0.048	-0.0191
1.00	07.25	-01.49	0.583	0.1027	-0.076	0.0051	0.038	-0.0145
1.00	07.25	-01.00	0.582	0.1031	-0.074	0.0036	0.027	-0.0093
1.00	07.25	-00.51	0.581	0.1032	-0.072	0.0023	0.016	-0.0040
1.00	07.25	-00.01	0.582	0.1040	-0.071	0.0008	0.004	0.0012
1.00	07.25	00.48	0.579	0.1053	-0.072	-0.0008	-0.006	0.0059
1.00	07.25	00.97	0.581	0.1065	-0.073	-0.0019	-0.017	0.0108
1.00	07.24	01.47	0.581	0.1079	-0.076	-0.0033	-0.029	0.0163
1.00	07.24	01.97	0.579	0.1087	-0.079	-0.0047	-0.040	0.0214
1.00	07.24	02.95	0.582	0.1136	-0.085	-0.0081	-0.064	0.0319
1.00	07.23	03.94	0.584	0.1181	-0.093	-0.0110	-0.088	0.0423
1.00	07.23	04.92	0.583	0.1138	-0.102	-0.0132	-0.113	0.0529
1.00	07.22	05.91	0.580	0.1297	-0.109	-0.0154	-0.138	0.0638
1.00	07.21	06.91	0.587	0.1374	-0.126	-0.0175	-0.161	0.0734
1.00	07.20	07.90	0.590	0.1450	-0.141	-0.0183	-0.182	0.0810
1.10	07.22	-04.92	0.547	0.1138	-0.084	0.0156	0.127	-0.0567
1.10	07.23	-03.94	0.547	0.1103	-0.081	0.0128	0.101	-0.0456
1.10	07.23	-02.95	0.546	0.1074	-0.076	0.0101	0.077	-0.0350
1.10	07.23	-01.97	0.546	0.1053	-0.073	0.0072	0.052	-0.0237
1.10	07.23	-01.48	0.545	0.1043	-0.072	0.0053	0.040	-0.0180
1.10	07.23	-00.99	0.546	0.1040	-0.072	0.0040	0.028	-0.0115
1.10	07.23	-00.51	0.544	0.1033	-0.070	0.0024	0.015	-0.0050
1.10	07.23	-00.01	0.544	0.1030	-0.070	0.0007	0.003	0.0010
1.10	07.23	00.47	0.546	0.1034	-0.069	-0.0007	-0.009	0.0077
1.10	07.23	00.97	0.544	0.1034	-0.067	-0.0025	-0.022	0.0143
1.10	07.23	01.45	0.540	0.1037	-0.068	-0.0041	-0.033	0.0200
1.10	07.23	01.94	0.542	0.1045	-0.070	-0.0058	-0.046	0.0263
1.10	07.23	02.93	0.543	0.1065	-0.076	-0.0087	-0.068	0.0371
1.10	07.22	03.92	0.540	0.1093	-0.079	-0.0113	-0.094	0.0479
1.10	07.22	04.90	0.541	0.1128	-0.084	-0.0135	-0.117	0.0580
1.10	07.21	05.89	0.540	0.1171	-0.088	-0.0158	-0.141	0.0680
1.10	07.20	06.89	0.538	0.1216	-0.095	-0.0182	-0.163	0.0767
1.10	07.20	07.88	0.537	0.1274	-0.102	-0.0197	-0.184	0.0850

TABLE III.- STATIC LATERAL-DIRECTIONAL AERODYNAMIC DATA FOR THE BASIC MODEL WITH AND WITHOUT THE EMPENNAGE - Continued

(b) S_1 for $\alpha \doteq 7^{\circ}$ - Concluded

M	α	β	C_L	C_D	C_m	C_l	C_c	C_n
1.20	0.721	-0.494	0.522	0.1102	-0.109	0.0125	0.120	-0.0503
1.20	0.722	-0.395	0.523	0.1069	-0.108	0.0102	0.094	-0.0397
1.20	0.722	-0.296	0.522	0.1043	-0.105	0.0082	0.071	-0.0298
1.20	0.722	-0.199	0.522	0.1027	-0.103	0.0053	0.048	-0.0194
1.20	0.722	-0.149	0.520	0.1017	-0.103	0.0041	0.037	-0.0147
1.20	0.722	-0.100	0.521	0.1014	-0.103	0.0033	0.025	-0.0092
1.20	0.722	-0.051	0.523	0.1012	-0.102	0.0019	0.014	-0.0040
1.20	0.722	-0.001	0.521	0.1009	-0.102	0.0006	0.003	0.0016
1.20	0.722	0.048	0.522	0.1008	-0.103	-0.0005	-0.008	0.0066
1.20	0.722	0.096	0.522	0.1012	-0.104	-0.0017	-0.019	0.0117
1.20	0.722	0.146	0.520	0.1014	-0.103	-0.0027	-0.030	0.0172
1.20	0.722	0.196	0.519	0.1020	-0.105	-0.0041	-0.041	0.0224
1.20	0.722	0.294	0.520	0.1037	-0.107	-0.0064	-0.065	0.0328
1.20	0.721	0.393	0.519	0.1060	-0.109	-0.0086	-0.088	0.0429
1.20	0.721	0.491	0.517	0.1094	-0.110	-0.0104	-0.112	0.0528
1.20	0.720	0.590	0.515	0.1135	-0.111	-0.0127	-0.136	0.0633
1.20	0.720	0.689	0.511	0.1182	-0.113	-0.0143	-0.159	0.0728
1.20	0.719	0.788	0.510	0.1239	-0.116	-0.0157	-0.181	0.0813
1.30	0.716	-0.496	0.473	0.1013	-0.123	0.0129	0.109	-0.0432
1.30	0.716	-0.397	0.472	0.0982	-0.122	-0.0103	0.086	-0.0339
1.30	0.716	-0.298	0.471	0.0957	-0.121	0.0081	0.063	-0.0245
1.30	0.716	-0.200	0.470	0.0945	-0.119	0.0051	0.042	-0.0157
1.30	0.716	-0.149	0.469	0.0939	-0.118	0.0041	0.032	-0.0112
1.30	0.716	-0.100	0.469	0.0932	-0.118	0.0029	0.022	-0.0072
1.30	0.716	-0.051	0.470	0.0931	-0.118	0.0016	0.012	-0.0029
1.30	0.716	-0.001	0.469	0.0928	-0.118	0.0003	0.003	0.0012
1.30	0.716	0.048	0.468	0.0928	-0.118	-0.0006	-0.008	0.0054
1.30	0.715	0.097	0.467	0.0929	-0.118	-0.0019	-0.018	0.0097
1.30	0.715	0.147	0.466	0.0931	-0.118	-0.0029	-0.028	0.0142
1.30	0.715	0.196	0.466	0.0937	-0.119	-0.0040	-0.038	0.0184
1.30	0.715	0.295	0.466	0.0952	-0.120	-0.0065	-0.059	0.0276
1.30	0.715	0.395	0.466	0.0977	-0.121	-0.0092	-0.082	0.0369
1.30	0.715	0.493	0.464	0.1006	-0.122	-0.0117	-0.104	0.0462
1.30	0.715	0.592	0.463	0.1047	-0.122	-0.0140	-0.128	0.0559
1.30	0.715	0.692	0.464	0.1097	-0.122	-0.0161	-0.149	0.0645
1.30	0.714	0.790	0.462	0.1154	-0.123	-0.0180	-0.171	0.0729
1.40	0.706	-0.496	0.437	0.0969	-0.114	0.0143	0.106	-0.0418
1.40	0.705	-0.397	0.438	0.0940	-0.116	0.0116	0.083	-0.0330
1.40	0.705	-0.298	0.438	0.0915	-0.117	0.0088	0.062	-0.0244
1.40	0.705	-0.200	0.437	0.0904	-0.119	0.0059	0.041	-0.0156
1.40	0.705	-0.149	0.439	0.0898	-0.119	0.0045	0.031	-0.0111
1.40	0.705	-0.099	0.439	0.0891	-0.120	0.0034	0.021	-0.0070
1.40	0.705	-0.051	0.439	0.0887	-0.120	0.0021	0.011	-0.0032
1.40	0.705	-0.001	0.438	0.0886	-0.120	0.0007	0.001	0.0010
1.40	0.705	0.048	0.438	0.0886	-0.120	-0.0007	-0.008	0.0047
1.40	0.705	0.098	0.438	0.0888	-0.120	-0.0020	-0.018	0.0089
1.40	0.705	0.148	0.437	0.0891	-0.120	-0.0032	-0.028	0.0132
1.40	0.705	0.197	0.435	0.0894	-0.119	-0.0046	-0.039	0.0179
1.40	0.705	0.296	0.433	0.0908	-0.117	-0.0074	-0.059	0.0267
1.40	0.705	0.396	0.431	0.0929	-0.115	-0.0100	-0.081	0.0357
1.40	0.705	0.495	0.430	0.0961	-0.113	-0.0130	-0.103	0.0447
1.40	0.704	0.594	0.427	0.0997	-0.112	-0.0155	-0.123	0.0527
1.40	0.704	0.694	0.426	0.1046	-0.110	-0.0175	-0.145	0.0607
1.40	0.704	0.793	0.423	0.1099	-0.110	-0.0195	-0.166	0.0670

TABLE III.- STATIC LATERAL-DIRECTIONAL AERODYNAMIC DATA FOR THE BASIC MODEL WITH AND WITHOUT THE EMPENNAGE - Continued

(c) S_1 for $\alpha \doteq 11^{\circ}$

M	α	β	C_L	C_D	C_m	C_l	C_c	C_n
0.80	11.31	-04.99	0.736	0.1649	-0.135	0.0149	0.101	-0.0401
0.80	11.31	-03.99	0.736	0.1624	-0.127	0.0118	0.081	-0.0329
0.80	11.32	-02.98	0.737	0.1601	-0.121	0.0095	0.060	-0.0251
0.80	11.32	-01.99	0.735	0.1586	-0.117	0.0061	0.041	-0.0166
0.80	11.32	-01.50	0.735	0.1581	-0.115	0.0048	0.031	-0.0121
0.80	11.32	-01.00	0.735	0.1578	-0.115	0.0034	0.024	-0.0088
0.80	11.32	-00.50	0.734	0.1575	-0.114	0.0022	0.014	-0.0044
0.80	11.32	-00.01	0.733	0.1568	-0.114	0.0006	0.005	0.0004
0.80	11.32	00.48	0.734	0.1574	-0.114	-0.0013	-0.006	0.0053
0.80	11.32	00.99	0.736	0.1578	-0.115	-0.0024	-0.013	0.0092
0.80	11.32	01.48	0.736	0.1581	-0.117	-0.0041	-0.022	0.0132
0.80	11.32	01.97	0.734	0.1582	-0.118	-0.0055	-0.032	0.0175
0.80	11.32	02.97	0.734	0.1593	-0.122	-0.0086	-0.050	0.0258
0.80	11.31	03.97	0.733	0.1611	-0.127	-0.0107	-0.069	0.0328
0.80	11.31	04.98	0.732	0.1639	-0.137	-0.0134	-0.090	0.0399
0.80	11.30	05.98	0.730	0.1667	-0.146	-0.0157	-0.109	0.0456
0.80	11.29	06.98	0.714	0.1705	-0.129	-0.0155	-0.128	0.0518
0.80	11.28	07.99	0.718	0.1753	-0.132	-0.0173	-0.146	0.0563
0.90	11.13	-04.98	0.795	0.1766	-0.159	0.0254	0.104	-0.0461
0.90	11.13	-03.98	0.798	0.1742	-0.156	0.0222	0.082	-0.0375
0.90	11.14	-02.98	0.802	0.1724	-0.153	0.0189	0.061	-0.0295
0.90	11.15	-01.99	0.812	0.1715	-0.145	0.0137	0.042	-0.0198
0.90	11.16	-01.49	0.816	0.1715	-0.144	0.0111	0.034	-0.0159
0.90	11.17	-01.00	0.828	0.1720	-0.138	0.0060	0.024	-0.0100
0.90	11.18	-00.50	0.833	0.1719	-0.136	0.0025	0.016	-0.0048
0.90	11.18	-00.01	0.837	0.1722	-0.136	-0.0003	0.005	0.0013
0.90	11.17	00.48	0.829	0.1713	-0.136	-0.0033	-0.004	0.0066
0.90	11.16	00.98	0.822	0.1707	-0.138	-0.0071	-0.013	0.0125
0.90	11.16	01.48	0.817	0.1710	-0.143	-0.0110	-0.021	0.0169
0.90	11.14	01.97	0.801	0.1695	-0.148	-0.0157	-0.028	0.0212
0.90	11.14	02.97	0.797	0.1705	-0.151	-0.0195	-0.047	0.0297
0.90	11.13	03.97	0.791	0.1713	-0.155	-0.0226	-0.068	0.0377
0.90	11.13	04.97	0.789	0.1742	-0.160	-0.0248	-0.090	0.0456
0.90	11.12	05.97	0.786	0.1771	-0.164	-0.0268	-0.110	0.0521
0.90	11.11	06.98	0.781	0.1806	-0.168	-0.0289	-0.128	0.0574
0.90	11.11	07.99	0.777	0.1851	-0.173	-0.0307	-0.144	0.0614
1.00	11.71	-04.97	0.937	0.2273	-0.178	0.0115	0.118	-0.0505
1.00	11.72	-03.97	0.933	0.2237	-0.167	0.0098	0.093	-0.0396
1.00	11.70	-02.98	0.928	0.2208	-0.158	0.0076	0.071	-0.0298
1.00	11.70	-01.99	0.927	0.2186	-0.153	0.0055	0.050	-0.0200
1.00	11.70	-01.50	0.927	0.2178	-0.151	0.0042	0.039	-0.0149
1.00	11.70	-01.01	0.926	0.2171	-0.150	0.0033	0.027	-0.0090
1.00	11.70	-00.51	0.924	0.2166	-0.149	0.0019	0.018	-0.0041
1.00	11.70	-00.01	0.923	0.2158	-0.149	0.0008	0.007	0.0006
1.00	11.70	00.48	0.924	0.2162	-0.149	-0.0007	-0.004	0.0051
1.00	11.70	00.98	0.922	0.2160	-0.150	-0.0018	-0.015	0.0114
1.00	11.70	01.47	0.923	0.2170	-0.152	-0.0031	-0.025	0.0164
1.00	11.70	01.96	0.921	0.2180	-0.152	-0.0040	-0.035	0.0212
1.00	11.69	02.95	0.922	0.2184	-0.156	-0.0066	-0.056	0.0306
1.00	11.68	03.95	0.920	0.2202	-0.165	-0.0086	-0.078	0.0405
1.00	11.68	04.94	0.921	0.2234	-0.175	-0.0106	-0.102	0.0509
1.00	11.67	05.92	0.922	0.2276	-0.185	-0.0119	-0.126	0.0620
1.00	11.66	06.92	0.923	0.2327	-0.198	-0.0131	-0.149	0.0715
1.00	11.65	07.92	0.927	0.2392	-0.216	-0.0134	-0.170	0.0795
1.10	11.65	-04.92	0.873	0.2179	-0.150	0.0127	0.187	-0.0612
1.10	11.65	-03.93	0.873	0.2142	-0.145	0.0113	0.102	-0.0506
1.10	11.66	-02.94	0.872	0.2115	-0.140	0.0090	0.079	-0.0390
1.10	11.66	-01.96	0.872	0.2094	-0.136	0.0066	0.057	-0.0276
1.10	11.66	-01.47	0.870	0.2084	-0.135	0.0054	0.045	-0.0215
1.10	11.66	-00.99	0.872	0.2080	-0.134	0.0039	0.033	-0.0146
1.10	11.66	-00.49	0.870	0.2070	-0.133	0.0024	0.019	-0.0072
1.10	11.66	-00.01	0.870	0.2068	-0.132	0.0009	0.005	0.0008
1.10	11.66	00.47	0.868	0.2064	-0.132	-0.0007	-0.008	0.0084
1.10	11.66	00.96	0.867	0.2068	-0.134	-0.0021	-0.021	0.0152
1.10	11.66	01.45	0.868	0.2075	-0.135	-0.0036	-0.032	0.0218
1.10	11.65	01.94	0.865	0.2077	-0.135	-0.0049	-0.044	0.0280
1.10	11.65	02.92	0.865	0.2095	-0.137	-0.0075	-0.067	0.0399
1.10	11.64	03.91	0.865	0.2123	-0.143	-0.0092	-0.092	0.0517
1.10	11.64	04.90	0.865	0.2156	-0.149	-0.0111	-0.115	0.0624
1.10	11.64	05.89	0.863	0.2197	-0.155	-0.0128	-0.139	0.0730
1.10	11.63	06.88	0.862	0.2244	-0.161	-0.0143	-0.161	0.0823
1.10	11.62	07.89	0.861	0.2293	-0.169	-0.0159	-0.179	0.0893

TABLE III.- STATIC LATERAL-DIRECTIONAL AERODYNAMIC DATA FOR THE BASIC MODEL WITH AND WITHOUT THE EMPENNAGE - Continued

(c) S_1 for $\alpha \doteq 11^{\circ}$ - Concluded

M	α	β	C_L	C_D	C_m	C_l	C_c	C_n
1.20	11.66	-0.495	0.857	0.2122	-0.206	0.0108	0.115	-0.0514
1.20	11.66	-0.396	0.856	0.2086	-0.200	0.0089	0.091	-0.0412
1.20	11.66	-0.297	0.856	0.2061	-0.200	0.0069	0.070	-0.0313
1.20	11.66	-0.198	0.857	0.2048	-0.200	0.0046	0.049	-0.0210
1.20	11.67	-0.149	0.859	0.2043	-0.201	0.0038	0.039	-0.0161
1.20	11.66	-0.100	0.856	0.2033	-0.200	0.0024	0.027	-0.0105
1.20	11.67	-0.050	0.859	0.2032	-0.201	0.0016	0.016	-0.0044
1.20	11.66	-0.002	0.858	0.2028	-0.201	0.0003	0.005	0.0015
1.20	11.66	0.047	0.857	0.2028	-0.200	-0.0007	-0.009	0.0075
1.20	11.66	0.097	0.856	0.2029	-0.200	-0.0018	-0.019	0.0135
1.20	11.68	0.146	0.862	0.2048	-0.197	-0.0028	-0.031	0.0186
1.20	11.66	0.195	0.855	0.2038	-0.200	-0.0137	-0.040	0.0236
1.20	11.66	0.294	0.850	0.2047	-0.198	-0.0056	-0.062	0.0344
1.20	11.67	0.392	0.854	0.2078	-0.196	-0.0075	-0.083	0.0449
1.20	11.66	0.492	0.853	0.2110	-0.200	-0.0093	-0.106	0.0548
1.20	11.66	0.591	0.850	0.2145	-0.200	-0.0109	-0.129	0.0637
1.20	11.64	0.691	0.837	0.2173	-0.201	-0.0122	-0.151	0.0724
1.20	11.65	0.791	0.843	0.2240	-0.200	-0.0137	-0.172	0.0801
1.30	11.61	-0.497	0.773	0.1950	-0.189	0.0105	0.109	-0.0449
1.30	11.64	-0.398	0.792	0.1951	-0.184	0.0083	0.086	-0.0350
1.30	11.64	-0.299	0.791	0.1924	-0.185	0.0059	0.064	-0.0248
1.30	11.64	-0.200	0.791	0.1910	-0.184	0.0035	0.042	-0.0146
1.30	11.64	-0.151	0.792	0.1905	-0.185	0.0026	0.033	-0.0104
1.30	11.64	-0.101	0.792	0.1903	-0.186	0.0019	0.023	-0.0068
1.30	11.65	-0.051	0.794	0.1880	-0.187	0.0011	0.013	-0.0027
1.30	11.61	-0.001	0.776	0.1870	-0.192	0.0005	0.004	0.0012
1.30	11.61	0.048	0.777	0.1872	-0.192	-0.0007	-0.007	0.0057
1.30	11.61	0.098	0.774	0.1867	-0.192	-0.0015	-0.016	0.0092
1.30	11.61	0.148	0.773	0.1868	-0.191	-0.0024	-0.025	0.0132
1.30	11.60	0.197	0.769	0.1866	-0.192	-0.0031	-0.035	0.0179
1.30	11.60	0.296	0.768	0.1880	-0.192	-0.0052	-0.057	0.0279
1.30	11.60	0.395	0.765	0.1899	-0.190	-0.0073	-0.079	0.0382
1.30	11.60	0.494	0.763	0.1929	-0.189	-0.0096	-0.101	0.0474
1.30	11.59	0.593	0.761	0.1969	-0.189	-0.0114	-0.123	0.0562
1.30	11.59	0.694	0.757	0.2013	0.189	-0.0131	-0.145	0.0643
1.30	11.58	0.795	0.756	0.2073	-0.193	-0.0141	-0.169	0.0714
1.40	11.29	-0.499	0.710	0.1799	-0.186	0.0182	0.108	-0.0425
1.40	11.29	-0.399	0.711	0.1763	-0.186	0.0102	0.086	-0.0338
1.40	11.29	-0.299	0.711	0.1735	-0.188	0.0079	0.063	-0.0239
1.40	11.29	-0.200	0.710	0.1715	-0.188	0.0051	0.043	-0.0146
1.40	11.29	-0.151	0.712	0.1714	-0.189	0.0043	0.033	-0.0105
1.40	11.29	-0.101	0.712	0.1709	-0.189	0.0031	0.024	-0.0068
1.40	11.29	-0.050	0.712	0.1707	-0.190	0.0020	0.014	-0.0031
1.40	11.29	-0.001	0.712	0.1704	-0.189	0.0008	0.004	0.0007
1.40	11.29	0.049	0.711	0.1702	-0.189	-0.0008	-0.006	0.0048
1.40	11.29	0.099	0.710	0.1704	-0.189	-0.0017	-0.015	0.0079
1.40	11.29	0.149	0.709	0.1706	-0.189	-0.0027	-0.025	0.0117
1.40	11.29	0.198	0.709	0.1709	-0.189	-0.0035	-0.034	0.0159
1.40	11.29	0.298	0.708	0.1727	-0.188	-0.0061	-0.055	0.0252
1.40	11.29	0.397	0.707	0.1750	-0.186	-0.0086	-0.077	0.0349
1.40	11.29	0.497	0.705	0.1783	-0.186	-0.0100	-0.098	0.0427
1.40	11.29	0.596	0.703	0.1824	-0.185	-0.0125	-0.120	0.0510
1.40	11.29	0.697	0.700	0.1869	-0.184	-0.0142	-0.142	0.0580
1.40	11.28	0.799	0.697	0.1924	-0.185	-0.0154	-0.164	0.0635

TABLE III.- STATIC LATERAL-DIRECTIONAL AERODYNAMIC DATA FOR THE BASIC MODEL WITH AND WITHOUT THE EMPENNAGE - Continued

(d) S_1-HVD for $\alpha \doteq 3^{\circ}$

M	α	β	C_L	C_D	C_m	C_l	C_c	C_n
0.80	2.67	-0.512	0.131	0.0211	0.029	-0.0061	0.019	0.0211
0.80	2.67	-0.409	0.127	0.0204	0.029	-0.0049	0.014	0.0170
0.80	2.67	-0.307	0.129	0.0201	0.031	-0.0037	0.011	0.0128
0.80	2.67	-0.204	0.128	0.0199	0.032	-0.0027	0.007	0.0089
0.80	2.67	-0.154	0.130	0.0199	0.032	-0.0023	0.005	0.0068
0.80	2.67	-0.103	0.128	0.0200	0.032	-0.0017	0.003	0.0046
0.80	2.68	-0.051	0.132	0.0202	0.032	-0.0013	0.002	0.0026
0.80	2.67	-0.000	0.129	0.0202	0.032	-0.0007	0.001	0.0007
0.80	2.67	0.050	0.129	0.0201	0.032	-0.0005	-0.000	-0.0012
0.80	2.67	0.102	0.128	0.0201	0.033	-0.0004	-0.002	-0.0033
0.80	2.68	0.153	0.130	0.0200	0.034	0.0002	-0.004	-0.0054
0.80	2.67	0.203	0.130	0.0199	0.033	0.0006	-0.005	-0.0073
0.80	2.67	0.306	0.129	0.0202	0.032	0.0020	-0.009	-0.0114
0.80	2.67	0.408	0.130	0.0205	0.032	0.0029	-0.012	-0.0155
0.80	2.68	0.511	0.133	0.0213	0.030	0.0040	-0.016	-0.0193
0.80	2.67	0.612	0.131	0.0220	0.029	0.0052	-0.021	-0.0230
0.80	2.67	0.715	0.131	0.0231	0.027	0.0059	-0.026	-0.0269
0.80	2.68	0.818	0.136	0.0244	0.026	0.0070	-0.032	-0.0305
0.90	2.70	-0.513	0.136	0.0222	0.035	-0.0058	0.017	0.0213
0.90	2.70	-0.411	0.134	0.0218	0.037	-0.0047	0.016	0.0177
0.90	2.70	-0.308	0.134	0.0215	0.038	-0.0033	0.012	0.0136
0.90	2.70	-0.205	0.130	0.0212	0.038	-0.0029	0.007	0.0094
0.90	2.70	-0.154	0.133	0.0213	0.039	-0.0018	0.005	0.0072
0.90	2.70	-0.103	0.134	0.0213	0.039	-0.0015	0.004	0.0050
0.90	2.70	-0.051	0.132	0.0213	0.039	-0.0009	0.003	0.0029
0.90	2.70	-0.001	0.132	0.0214	0.039	-0.0007	0.001	0.0011
0.90	2.70	0.050	0.132	0.0214	0.040	-0.0006	0.000	-0.0010
0.90	2.70	0.102	0.132	0.0213	0.039	-0.0000	-0.002	-0.0032
0.90	2.70	0.153	0.131	0.0210	0.039	0.0005	-0.004	-0.0053
0.90	2.70	0.204	0.133	0.0211	0.039	0.0012	-0.006	-0.0074
0.90	2.70	0.307	0.134	0.0214	0.039	0.0020	-0.009	-0.0114
0.90	2.71	0.409	0.136	0.0218	0.038	0.0032	-0.013	-0.0156
0.90	2.70	0.512	0.136	0.0224	0.036	0.0035	-0.017	-0.0196
0.90	2.71	0.614	0.139	0.0233	0.035	0.0048	-0.022	-0.0235
0.90	2.70	0.717	0.138	0.0244	0.033	0.0057	-0.027	-0.0274
0.90	2.71	0.820	0.142	0.0258	0.031	0.0072	-0.033	-0.0313
1.00	2.78	-0.515	0.195	0.0392	0.012	-0.0049	0.020	0.0227
1.00	2.78	-0.412	0.195	0.0383	0.014	-0.0040	0.015	0.0185
1.00	2.78	-0.309	0.194	0.0381	0.016	-0.0030	0.011	0.0142
1.00	2.79	-0.206	0.194	0.0381	0.017	-0.0022	0.008	0.0097
1.00	2.79	-0.155	0.194	0.0381	0.018	-0.0018	0.006	0.0074
1.00	2.79	-0.104	0.195	0.0384	0.019	-0.0015	0.004	0.0050
1.00	2.79	-0.052	0.192	0.0382	0.018	-0.0012	0.003	0.0030
1.00	2.78	-0.001	0.191	0.0382	0.018	-0.0010	0.001	0.0008
1.00	2.79	0.050	0.195	0.0382	0.019	-0.0007	0.000	-0.0014
1.00	2.79	0.102	0.194	0.0380	0.018	-0.0001	-0.002	-0.0035
1.00	2.79	0.153	0.195	0.0379	0.018	0.0001	-0.003	-0.0057
1.00	2.79	0.204	0.194	0.0377	0.018	0.0004	-0.005	-0.0079
1.00	2.79	0.308	0.193	0.0380	0.017	0.0010	-0.008	-0.0122
1.00	2.79	0.411	0.195	0.0386	0.016	0.0017	-0.012	-0.0166
1.00	2.79	0.514	0.195	0.0386	0.014	0.0029	-0.016	-0.0209
1.00	2.79	0.616	0.199	0.0406	0.012	0.0037	-0.022	-0.0247
1.00	2.79	0.719	0.199	0.0413	0.010	0.0052	-0.028	-0.0289
1.00	2.79	0.823	0.200	0.0433	0.007	0.0062	-0.035	-0.0327
1.10	2.78	-0.517	0.189	0.0442	0.000	-0.0071	0.022	0.0229
1.10	2.79	-0.413	0.191	0.0435	0.002	-0.0061	0.017	0.0187
1.10	2.79	-0.310	0.192	0.0429	0.002	-0.0044	0.012	0.0143
1.10	2.79	-0.206	0.192	0.0426	0.002	-0.0033	0.008	0.0099
1.10	2.79	-0.155	0.194	0.0427	0.002	-0.0026	0.006	0.0077
1.10	2.79	-0.104	0.194	0.0426	0.003	-0.0018	0.004	0.0055
1.10	2.79	-0.052	0.194	0.0427	0.003	-0.0015	0.003	0.0033
1.10	2.79	-0.001	0.193	0.0426	0.004	-0.0007	0.001	0.0013
1.10	2.80	0.050	0.195	0.0427	0.004	-0.0003	-0.001	-0.0009
1.10	2.80	0.103	0.194	0.0427	0.003	0.0005	-0.003	-0.0032
1.10	2.79	0.205	0.193	0.0426	0.003	0.0013	-0.007	-0.0076
1.10	2.79	0.308	0.193	0.0429	0.003	0.0026	-0.010	-0.0119
1.10	2.79	0.412	0.193	0.0436	0.002	0.0043	-0.014	-0.0163
1.10	2.79	0.515	0.193	0.0443	0.001	0.0053	-0.019	-0.0205
1.10	2.79	0.618	0.190	0.0455	-0.001	0.0066	-0.025	-0.0246
1.10	2.78	0.722	0.189	0.0469	-0.002	0.0078	-0.030	-0.0289
1.10	2.78	0.825	0.188	0.0486	-0.003	0.0094	-0.037	-0.0330

TABLE III.- STATIC LATERAL-DIRECTIONAL AERODYNAMIC DATA FOR THE BASIC MODEL WITH AND WITHOUT THE EMPENNAGE - Continued

(d) S_1-HVD for $\alpha \doteq 3^{\circ}$ - Concluded

M	α	β	C_L	C_D	C_m	C_l	C_c	C_n
1.20	02.76	-05.18	0.170	0.0426	-0.012	-0.0092	0.024	0.0220
1.20	02.76	-04.14	0.169	0.0417	-0.011	-0.0076	0.019	0.0178
1.20	02.76	-03.10	0.172	0.0411	-0.010	-0.0057	0.013	0.0138
1.20	02.76	-02.07	0.171	0.0408	-0.009	-0.0041	0.009	0.0094
1.20	02.76	-01.55	0.171	0.0407	-0.008	-0.0034	0.007	0.0074
1.20	02.76	-01.04	0.172	0.0408	-0.009	-0.0022	0.005	0.0052
1.20	02.76	-00.52	0.170	0.0408	-0.008	-0.0016	0.003	0.0032
1.20	02.77	-00.07	0.172	0.0409	-0.008	-0.0007	0.001	0.0012
1.20	02.76	00.50	0.172	0.0409	-0.008	-0.0000	-0.001	-0.0007
1.20	02.77	01.03	0.172	0.0410	-0.008	0.0008	-0.004	-0.0028
1.20	02.77	01.54	0.172	0.0409	-0.009	0.0015	-0.005	-0.0051
1.20	02.77	02.05	0.173	0.0408	-0.009	0.0024	-0.007	-0.0071
1.20	02.77	03.09	0.174	0.0413	-0.010	0.0039	-0.012	-0.0113
1.20	02.76	04.12	0.173	0.0420	-0.011	0.0058	-0.016	-0.0153
1.20	02.77	05.16	0.175	0.0430	-0.012	0.0073	-0.022	-0.0194
1.20	02.76	06.18	0.174	0.0441	-0.014	0.0089	-0.028	-0.0233
1.20	02.76	07.22	0.175	0.0457	-0.015	0.0105	-0.034	-0.0275
1.20	02.76	08.26	0.174	0.0473	-0.016	0.0122	-0.041	-0.0317
1.30	02.73	-05.18	0.150	0.0404	-0.011	-0.0079	0.024	0.0221
1.30	02.74	-04.14	0.151	0.0397	-0.009	-0.0062	0.018	0.0179
1.30	02.74	-03.11	0.152	0.0391	-0.008	-0.0046	0.013	0.0137
1.30	02.74	-02.07	0.151	0.0386	-0.007	-0.0032	0.008	0.0094
1.30	02.74	-01.55	0.150	0.0387	-0.006	-0.0024	0.006	0.0073
1.30	02.74	-01.04	0.150	0.0387	-0.006	-0.0017	0.005	0.0052
1.30	02.74	-00.52	0.150	0.0387	-0.006	-0.0010	0.002	0.0031
1.30	02.74	-00.01	0.151	0.0388	-0.006	-0.0003	0.000	0.0011
1.30	02.74	00.51	0.152	0.0389	-0.006	0.0002	-0.001	-0.0012
1.30	02.74	01.03	0.151	0.0388	-0.006	0.0009	-0.004	-0.0031
1.30	02.74	01.54	0.151	0.0389	-0.006	0.0016	-0.006	-0.0053
1.30	02.74	02.05	0.150	0.0389	-0.006	0.0023	-0.008	-0.0073
1.30	02.74	03.09	0.151	0.0393	-0.007	0.0037	-0.012	-0.0116
1.30	02.74	04.13	0.153	0.0401	-0.008	0.0049	-0.017	-0.0160
1.30	02.75	05.17	0.154	0.0410	-0.009	0.0065	-0.022	-0.0201
1.30	02.74	06.20	0.154	0.0422	-0.011	0.0079	-0.028	-0.0243
1.30	02.74	07.24	0.154	0.0436	-0.013	0.0095	-0.034	-0.0286
1.30	02.74	08.28	0.154	0.0454	-0.015	0.0111	-0.041	-0.0332
1.40	02.70	-05.17	0.136	0.0398	-0.009	-0.0068	0.023	0.0223
1.40	02.71	-04.14	0.137	0.0390	-0.008	-0.0055	0.017	0.0181
1.40	02.70	-03.10	0.135	0.0384	-0.007	-0.0040	0.013	0.0137
1.40	02.71	-02.06	0.135	0.0381	-0.005	-0.0027	0.008	0.0093
1.40	02.71	-01.55	0.137	0.0381	-0.006	-0.0020	0.006	0.0071
1.40	02.71	-01.04	0.136	0.0382	-0.005	-0.0015	0.004	0.0050
1.40	02.71	-00.52	0.135	0.0382	-0.005	-0.0009	0.002	0.0029
1.40	02.71	-00.04	1.372	0.0393	-0.005	0.0002	-0.002	-0.0012
1.40	02.71	00.51	0.137	0.0383	-0.005	0.0002	-0.002	-0.0012
1.40	02.71	01.03	0.136	0.0384	-0.005	0.0010	-0.004	-0.0034
1.40	02.71	01.54	0.137	0.0383	-0.005	0.0015	-0.006	-0.0056
1.40	02.71	02.05	0.136	0.0383	-0.005	0.0022	-0.008	-0.0077
1.40	02.71	03.09	0.136	0.0389	-0.006	0.0035	-0.012	-0.0120
1.40	02.71	04.13	0.138	0.0396	-0.007	0.0049	-0.016	-0.0163
1.40	02.71	05.16	0.138	0.0405	-0.008	0.0061	-0.022	-0.0206
1.40	02.71	06.19	0.139	0.0417	-0.010	0.0075	-0.028	-0.0250
1.40	02.70	07.23	0.137	0.0432	-0.011	0.0086	-0.034	-0.0294
1.40	02.70	08.27	0.138	0.0452	-0.012	0.0104	-0.041	-0.0340

TABLE III.- STATIC LATERAL-DIRECTIONAL AERODYNAMIC DATA FOR THE BASIC MODEL WITH AND WITHOUT THE EMPENNAGE - Continued

(e) S_1-HVD for $\alpha \doteq 7^{\circ}$

M	α	β	C_L	C_D	C_m	C_l	C_c	C_n
0.80	07.04	-05.12	0.413	0.0540	0.075	-0.0008	0.023	0.0209
0.80	07.04	-04.10	0.415	0.0533	0.077	-0.0004	0.019	0.0166
0.80	07.05	-03.07	0.417	0.0532	0.078	-0.0000	0.014	0.0122
0.80	07.05	-02.05	0.418	0.0531	0.079	0.0003	0.010	0.0080
0.80	07.05	-01.54	0.416	0.0526	0.080	0.0003	0.009	0.0061
0.80	07.05	-01.03	0.415	0.0525	0.080	0.0004	0.008	0.0042
0.80	07.05	-00.53	0.415	0.0525	0.081	-0.0002	0.006	0.0024
0.80	07.05	-00.01	0.413	0.0522	0.081	0.0007	0.005	0.0005
0.80	07.05	00.50	0.416	0.0526	0.081	0.0003	0.004	-0.0017
0.80	07.05	01.00	0.413	0.0522	0.081	-0.0002	0.004	-0.0033
0.80	07.05	01.52	0.414	0.0524	0.081	0.0003	0.002	-0.0052
0.80	07.05	02.03	0.414	0.0525	0.081	0.0002	0.001	-0.0074
0.80	07.05	03.05	0.414	0.0532	0.079	0.0002	-0.003	-0.0116
0.80	07.04	04.08	0.412	0.0534	0.078	0.0005	-0.007	-0.0157
0.80	07.04	05.10	0.413	0.0544	0.076	0.0009	-0.011	-0.0198
0.80	07.04	06.12	0.410	0.0557	0.072	0.0008	-0.014	-0.0241
0.80	07.03	07.15	0.410	0.0576	0.068	0.0011	-0.019	-0.0281
0.80	07.04	08.17	0.411	0.0597	0.065	0.0017	-0.024	-0.0326
0.90	07.18	-05.14	0.478	0.0688	0.062	-0.0006	0.024	0.0219
0.90	07.19	-04.12	0.482	0.0689	0.063	0.0003	0.019	0.0175
0.90	07.20	-03.08	0.484	0.0691	0.063	0.0004	0.014	0.0128
0.90	07.19	-02.06	0.480	0.0678	0.066	0.0006	0.010	0.0086
0.90	07.19	-01.55	0.477	0.0672	0.067	0.0010	0.009	0.0065
0.90	07.19	-01.04	0.477	0.0671	0.067	0.0010	0.008	0.0045
0.90	07.19	-00.53	0.477	0.0673	0.066	0.0008	0.006	0.0027
0.90	07.19	-00.01	0.476	0.0671	0.067	0.0005	0.005	0.0008
0.90	07.19	00.50	0.478	0.0673	0.067	0.0007	0.004	-0.0012
0.90	07.19	01.00	0.479	0.0678	0.066	0.0002	0.003	-0.0030
0.90	07.19	01.52	0.476	0.0673	0.066	0.0002	0.002	-0.0049
0.90	07.19	02.03	0.477	0.0674	0.066	0.0005	0.000	-0.0070
0.90	07.19	03.06	0.475	0.0673	0.067	0.0001	-0.003	-0.0113
0.90	07.18	04.09	0.473	0.0676	0.065	0.0006	-0.007	-0.0158
0.90	07.18	05.11	0.474	0.0682	0.064	0.0013	-0.012	-0.0204
0.90	07.18	06.15	0.472	0.0688	0.062	0.0011	-0.016	-0.0245
0.90	07.18	07.18	0.469	0.0694	0.061	0.0192	-0.021	-0.0287
0.90	07.17	08.20	0.468	0.0707	0.059	0.0024	-0.026	-0.0331
1.00	07.29	-05.16	0.553	0.0951	0.000	-0.0039	0.024	0.0219
1.00	07.29	-04.13	0.557	0.0949	0.001	-0.0028	0.019	0.0172
1.00	07.29	-03.09	0.558	0.0947	0.002	-0.0017	0.015	0.0126
1.00	07.30	-02.07	0.556	0.0944	0.003	-0.0010	0.012	0.0080
1.00	07.30	-01.55	0.557	0.0943	0.003	-0.0005	0.011	0.0061
1.00	07.30	-01.04	0.556	0.0940	0.004	0.0003	0.009	0.0040
1.00	07.30	-00.53	0.556	0.0940	0.004	0.0005	0.007	0.0022
1.00	07.29	-00.01	0.555	0.0939	0.004	0.0010	0.005	0.0004
1.00	07.29	00.50	0.555	0.0937	0.004	0.0015	0.004	-0.0015
1.00	07.29	01.01	0.554	0.0938	0.004	0.0019	0.002	-0.0036
1.00	07.29	01.53	0.556	0.0939	0.004	0.0023	0.001	-0.0054
1.00	07.30	02.04	0.555	0.0940	0.004	0.0026	-0.001	-0.0072
1.00	07.29	03.07	0.552	0.0939	0.003	0.0035	-0.005	-0.0116
1.00	07.29	04.10	0.551	0.0943	0.003	0.0043	-0.009	-0.0161
1.00	07.29	05.13	0.551	0.0952	0.001	0.0055	-0.013	-0.0206
1.00	07.29	06.16	0.548	0.0964	-0.001	0.0066	-0.018	-0.0252
1.00	07.28	07.20	0.548	0.0970	-0.002	0.0080	-0.024	-0.0297
1.00	07.28	08.22	0.545	0.0982	-0.005	0.0091	-0.029	-0.0338
1.10	07.27	-05.17	0.510	0.0941	-0.000	-0.0039	0.024	0.0217
1.10	07.27	-04.13	0.511	0.0934	0.002	-0.0029	0.020	0.0171
1.10	07.27	-03.10	0.513	0.0929	0.002	-0.0020	0.016	0.0127
1.10	07.27	-02.07	0.511	0.0924	0.003	-0.0008	0.011	0.0083
1.10	07.28	-01.55	0.515	0.0926	0.003	-0.0004	0.010	0.0061
1.10	07.28	-01.04	0.515	0.0926	0.003	0.0001	0.008	0.0043
1.10	07.28	-00.53	0.514	0.0923	0.003	0.0004	0.006	0.0025
1.10	07.28	-00.01	0.514	0.0923	0.003	0.0009	0.004	0.0005
1.10	07.28	00.50	0.514	0.0925	0.003	0.0012	0.003	-0.0013
1.10	07.28	01.01	0.514	0.0925	0.003	0.0014	0.002	-0.0032
1.10	07.28	01.53	0.516	0.0927	0.003	0.0018	-0.000	-0.0052
1.10	07.28	02.04	0.513	0.0926	0.003	0.0022	-0.002	-0.0074
1.10	07.28	03.08	0.512	0.0931	0.002	0.0029	-0.006	-0.0115
1.10	07.27	04.11	0.512	0.0936	0.001	0.0039	-0.010	-0.0159
1.10	07.27	05.14	0.509	0.0974	-0.000	0.0049	-0.014	-0.0208
1.10	07.27	06.18	0.509	0.0950	-0.002	0.0062	-0.020	-0.0252
1.10	07.26	07.22	0.506	0.0959	-0.005	0.0072	-0.025	-0.0299
1.10	07.26	08.24	0.504	0.0972	-0.007	0.0082	-0.030	-0.0346

TABLE III.- STATIC LATERAL-DIRECTIONAL AERODYNAMIC DATA FOR THE BASIC MODEL WITH AND WITHOUT THE EMPENNAGE - Continued

(e) S_1-HVD for $\alpha \doteq 7^\circ$ - Concluded

M	α	β	C_L	C_D	C_m	C_l	C_c	C_n
1.20	7.25	-5.19	0.479	0.0901	-0.019	-0.0064	0.025	0.0233
1.20	7.25	-4.15	0.480	0.0894	-0.017	-0.0048	0.018	0.0186
1.20	7.25	-3.11	0.479	0.0889	-0.017	-0.0034	0.014	0.0143
1.20	7.25	-2.08	0.481	0.0887	-0.017	-0.0023	0.010	0.0098
1.20	7.25	-1.56	0.480	0.0884	-0.017	-0.0017	0.009	0.0076
1.20	7.26	-1.05	0.483	0.0886	-0.016	-0.0009	0.007	0.0054
1.20	7.26	-0.54	0.483	0.0886	-0.016	-0.0003	0.006	0.0033
1.20	7.26	-0.01	0.483	0.0885	-0.016	0.0004	0.004	0.0013
1.20	7.26	0.50	0.483	0.0886	-0.016	0.0010	0.002	-0.0008
1.20	7.26	1.01	0.485	0.0888	-0.016	0.0018	0.000	-0.0029
1.20	7.26	1.53	0.484	0.0889	-0.017	0.0024	-0.002	-0.0051
1.20	7.26	2.05	0.484	0.0893	-0.017	0.0028	-0.005	-0.0076
1.20	7.26	3.08	0.483	0.0893	-0.017	0.0041	-0.007	-0.0119
1.20	7.26	4.12	0.482	0.0898	-0.018	0.0056	-0.011	-0.0166
1.20	7.25	5.15	0.479	0.0905	-0.020	0.0071	-0.016	-0.0212
1.20	7.25	6.19	0.479	0.0914	-0.022	0.0085	-0.021	-0.0254
1.20	7.24	7.23	0.476	0.0924	-0.023	0.0100	-0.027	-0.0297
1.20	7.24	8.26	0.473	0.0938	-0.024	0.0115	-0.033	-0.0346
1.30	7.19	-5.19	0.422	0.0787	-0.011	-0.0044	0.024	0.0236
1.30	7.19	-4.15	0.421	0.0803	-0.010	-0.0033	0.018	0.0189
1.30	7.19	-3.11	0.421	0.0782	-0.009	-0.0023	0.014	0.0141
1.30	7.19	-2.08	0.421	0.0781	-0.008	-0.0014	0.010	0.0095
1.30	7.19	-1.56	0.421	0.0784	-0.008	-0.0012	0.009	0.0072
1.30	7.19	-1.04	0.421	0.0783	-0.008	-0.0005	0.006	0.0049
1.30	7.19	-0.53	0.421	0.0787	-0.007	0.0001	0.005	0.0029
1.30	7.19	-0.01	0.421	0.0791	-0.007	0.0005	0.003	0.0007
1.30	7.19	0.50	0.422	0.0787	-0.007	0.0010	0.002	-0.0015
1.30	7.19	1.01	0.420	0.0788	-0.007	0.0013	0.000	-0.0035
1.30	7.19	1.54	0.421	0.0796	-0.008	0.0020	-0.002	-0.0058
1.30	7.19	2.05	0.420	0.0799	-0.008	0.0021	-0.003	-0.0082
1.30	7.19	3.09	0.420	0.0806	-0.008	0.0031	-0.006	-0.0127
1.30	7.19	4.13	0.420	0.0818	-0.010	0.0040	-0.011	-0.0174
1.30	7.19	5.16	0.420	0.0831	-0.011	0.0051	-0.016	-0.0220
1.30	7.19	6.20	0.421	0.0855	-0.013	0.0059	-0.021	-0.0268
1.30	7.19	7.25	0.421	0.0872	-0.015	0.0069	-0.027	-0.0318
1.30	7.19	8.28	0.421	0.0898	-0.016	0.0080	-0.033	-0.0367
1.40	7.10	-5.18	0.397	0.0759	-0.016	-0.0024	0.023	0.0233
1.40	7.10	-4.14	0.395	0.0754	-0.014	-0.0017	0.017	0.0186
1.40	7.10	-3.10	0.396	0.0754	-0.013	-0.0010	0.013	0.0140
1.40	7.10	-2.08	0.395	0.0753	-0.012	-0.0003	0.009	0.0094
1.40	7.10	-1.55	0.394	0.0752	-0.012	-0.0001	0.008	0.0072
1.40	7.10	-1.04	0.396	0.0754	-0.012	0.0004	0.006	0.0049
1.40	7.10	-0.53	0.394	0.0755	-0.012	0.0006	0.004	0.0026
1.40	7.10	-0.01	0.395	0.0758	-0.012	0.0009	0.008	0.0006
1.40	7.10	0.50	0.394	0.0759	-0.012	0.0012	0.001	-0.0016
1.40	7.10	1.02	0.395	0.0763	-0.012	0.0013	-0.001	-0.0037
1.40	7.10	1.54	0.394	0.0765	-0.012	0.0018	-0.003	-0.0060
1.40	7.10	2.05	0.394	0.0768	-0.012	0.0021	-0.004	-0.0083
1.40	7.10	4.12	0.395	0.0788	-0.014	0.0032	-0.012	-0.0174
1.40	7.10	6.19	0.393	0.0817	-0.015	0.0048	-0.023	-0.0267
1.40	7.10	7.23	0.394	0.0837	-0.016	0.0059	-0.029	-0.0316
1.40	7.09	8.27	0.391	0.0863	-0.017	0.0070	-0.037	-0.0373

TABLE III.- STATIC LATERAL-DIRECTIONAL AERODYNAMIC DATA FOR THE BASIC MODEL WITH AND WITHOUT THE EMPENNAGE - Continued

(f) S_1-HVD for $\alpha \doteq 11^\circ$

M	α	β	C_L	C_D	C_m	C_l	C_c	C_n
0.80	11.32	-05.13	0.648	0.1422	0.053	0.0039	0.019	0.0203
0.80	11.33	-04.10	0.652	0.1424	0.056	0.0033	0.015	0.0157
0.80	11.34	-03.07	0.666	0.1426	0.055	0.0028	0.011	0.0114
0.80	11.34	-02.05	0.656	0.1428	0.056	0.0018	0.010	0.0077
0.80	11.34	-01.54	0.657	0.1427	0.057	0.0014	0.009	0.0056
0.80	11.34	-01.03	0.657	0.1425	0.057	0.0012	0.009	0.0037
0.80	11.34	-00.52	0.656	0.1422	0.057	0.0007	0.008	0.0019
0.80	11.34	-00.01	0.657	0.1422	0.057	0.0002	0.007	-0.0000
0.80	11.33	00.50	0.656	0.1421	0.057	-0.0001	0.007	-0.0021
0.80	11.34	01.01	0.657	0.1426	0.056	-0.0004	0.007	-0.0039
0.80	11.34	01.52	0.656	0.1424	0.056	-0.0011	0.006	-0.0057
0.80	11.34	02.03	0.657	0.1424	0.056	-0.0014	0.006	-0.0078
0.80	11.33	03.05	0.654	0.1421	0.056	-0.0023	0.004	-0.0117
0.80	11.33	04.09	0.651	0.1418	0.056	-0.0031	-0.001	-0.0161
0.80	11.32	05.11	0.644	0.1408	0.054	-0.0033	-0.004	-0.0206
0.80	11.31	06.14	0.641	0.1408	0.053	-0.0039	-0.008	-0.0254
0.80	11.31	07.17	0.637	0.1409	0.050	-0.0047	-0.013	-0.0301
0.80	11.30	08.20	0.633	0.1405	0.047	-0.0058	-0.017	-0.0349
0.90	11.15	-05.09	0.701	0.1511	0.045	0.0139	0.018	0.0169
0.90	11.15	-04.07	0.703	0.1508	0.047	0.0127	0.014	0.0128
0.90	11.16	-03.05	0.711	0.1519	0.048	0.0119	0.011	0.0085
0.90	11.17	-02.03	0.719	0.1519	0.050	0.0097	0.008	0.0049
0.90	11.18	-01.53	0.730	0.1528	0.053	0.0069	0.009	0.0039
0.90	11.19	-01.02	0.740	0.1534	0.056	0.0037	0.009	0.0029
0.90	11.19	-00.51	0.745	0.1539	0.056	0.0021	0.008	0.0013
0.90	11.19	-00.01	0.747	0.1541	0.057	0.0015	0.008	-0.0003
0.90	11.19	00.50	0.746	0.1538	0.058	-0.0001	0.008	-0.0019
0.90	11.18	01.01	0.733	0.1524	0.056	-0.0042	0.008	-0.0027
0.90	11.17	01.51	0.720	0.1512	0.053	-0.0082	0.008	-0.0035
0.90	11.16	02.01	0.712	0.1510	0.049	-0.0113	0.008	-0.0046
0.90	11.16	03.03	0.706	0.1503	0.049	-0.0119	0.006	-0.0086
0.90	11.15	04.06	0.701	0.1495	0.050	-0.0124	0.001	-0.0130
0.90	11.15	05.08	0.698	0.1497	0.047	-0.0129	-0.004	-0.0177
0.90	11.14	06.10	0.694	0.1496	0.044	-0.0136	-0.008	-0.0224
0.90	11.14	07.12	0.688	0.1493	0.042	-0.0143	-0.012	-0.0270
0.90	11.13	08.14	0.682	0.1494	0.039	-0.0148	-0.016	-0.0319
1.00	11.47	-05.13	0.854	0.1945	-0.015	-0.0022	0.023	0.0205
1.00	11.47	-04.10	0.852	0.1936	-0.013	-0.0019	0.020	0.0158
1.00	11.47	-03.08	0.852	0.1932	-0.014	-0.0011	0.018	0.0113
1.00	11.47	-02.05	0.854	0.1930	-0.045	-0.0005	0.015	0.0069
1.00	11.47	-01.54	0.854	0.1928	-0.014	-0.0002	0.013	0.0053
1.00	11.47	-01.03	0.854	0.1926	-0.014	0.0002	0.011	0.0036
1.00	11.47	-00.52	0.854	0.1925	-0.014	0.0005	0.010	0.0017
1.00	11.47	-00.01	0.856	0.1929	-0.014	0.0008	0.009	-0.0003
1.00	11.47	00.50	0.854	0.1924	-0.014	0.0014	0.007	-0.0023
1.00	11.47	01.02	0.856	0.1928	-0.014	0.0017	0.005	-0.0043
1.00	11.47	01.52	0.855	0.1927	-0.014	0.0020	0.004	-0.0060
1.00	11.47	02.03	0.852	0.1923	-0.014	0.0020	0.002	-0.0080
1.00	11.47	03.11	0.851	0.1925	-0.013	0.0025	0.000	-0.0125
1.00	11.46	04.09	0.846	0.1920	-0.012	0.0027	-0.004	-0.0167
1.00	11.46	05.12	0.847	0.1926	-0.014	0.0033	-0.007	-0.0214
1.00	11.46	06.14	0.844	0.1931	-0.016	0.0039	-0.011	-0.0267
1.00	11.46	07.17	0.843	0.1937	-0.019	0.0050	-0.015	-0.0315
1.00	11.45	08.20	0.841	0.1947	-0.022	0.0058	-0.019	-0.0367
1.10	11.49	-05.15	0.807	0.1875	-0.016	-0.0021	0.023	0.0215
1.10	11.49	-04.11	0.807	0.1867	-0.015	-0.0012	0.019	0.0165
1.10	11.49	-03.08	0.807	0.1864	-0.014	-0.0005	0.016	0.0119
1.10	11.49	-02.05	0.811	0.1867	-0.014	-0.0002	0.013	0.0077
1.10	11.49	-01.54	0.811	0.1866	-0.015	0.0000	0.012	0.0056
1.10	11.49	-01.04	0.811	0.1865	-0.015	0.0003	0.010	0.0037
1.10	11.49	-00.52	0.811	0.1865	-0.015	0.0006	0.009	0.0017
1.10	11.49	-00.01	0.810	0.1863	-0.015	0.0007	0.008	-0.0002
1.10	11.49	00.50	0.809	0.1864	-0.015	0.0008	0.006	-0.0022
1.10	11.49	01.02	0.807	0.1856	-0.015	0.0009	0.005	-0.0040
1.10	11.49	01.53	0.810	0.1866	-0.015	0.0011	0.004	-0.0058
1.10	11.49	02.04	0.808	0.1861	-0.014	0.0013	0.002	-0.0081
1.10	11.49	03.06	0.805	0.1860	-0.013	0.0015	-0.000	-0.0125
1.10	11.48	04.09	0.803	0.1860	-0.014	0.0021	-0.004	-0.0169
1.10	11.48	05.13	0.802	0.1866	-0.016	0.0027	-0.007	-0.0215
1.10	11.48	06.15	0.799	0.1869	-0.018	0.0034	-0.011	-0.0266
1.10	11.48	07.19	0.799	0.1880	-0.021	0.0039	-0.016	-0.0319
1.10	11.47	08.22	0.794	0.1882	-0.023	0.0044	-0.021	-0.0369

TABLE III.- STATIC LATERAL-DIRECTIONAL AERODYNAMIC DATA FOR THE BASIC MODEL WITH AND WITHOUT THE EMPENNAGE - Concluded

(f) S_1-HVD for $\alpha \doteq 11^{\circ}$ - Concluded

M	α	β	C_L	C_D	C_m	C_l	C_c	C_n
1.20	11.48	-05.17	0.757	01759	-0.030	-0.0021	0.022	0.0242
1.20	11.48	-04.13	0.759	01757	-0.028	-0.0017	0.018	0.0191
1.20	11.48	-03.10	0.759	01751	-0.027	-0.0010	0.015	0.0142
1.20	11.48	-02.06	0.761	01751	-0.028	-0.0005	0.013	0.0094
1.20	11.48	-01.55	0.762	01751	-0.029	0.0000	0.012	0.0066
1.20	11.48	-01.04	0.761	01752	-0.029	0.0001	0.010	0.0045
1.20	11.49	-00.52	0.763	01752	-0.028	0.0006	0.009	0.0023
1.20	11.49	-00.01	0.763	01751	-0.028	0.0010	0.007	0.0003
1.20	11.49	00.50	0.762	01751	-0.028	0.0012	0.006	-0.0020
1.20	11.49	01.02	0.763	01753	-0.028	0.0018	0.004	-0.0043
1.20	11.48	01.53	0.760	01748	-0.027	0.0017	0.002	-0.0065
1.20	11.48	02.04	0.758	01746	-0.027	0.0020	0.001	-0.0093
1.20	11.48	03.07	0.758	01749	-0.028	0.0025	-0.001	-0.0139
1.20	11.48	04.11	0.758	01754	-0.029	0.0033	-0.004	-0.0191
1.20	11.47	05.14	0.754	01755	-0.031	0.0039	-0.008	-0.0241
1.20	11.47	06.17	0.751	01759	-0.032	0.0048	-0.012	-0.0297
1.20	11.46	07.21	0.748	01766	-0.034	0.0058	-0.016	-0.0352
1.20	11.46	08.25	0.748	01781	-0.036	0.0062	-0.022	-0.0413
1.30	11.40	-05.17	0.677	01599	-0.018	-0.0018	0.024	0.0242
1.30	11.40	-04.14	0.678	01591	-0.018	-0.0015	0.021	0.0194
1.30	11.41	-03.10	0.678	01585	-0.018	-0.0008	0.017	0.0145
1.30	11.41	-02.07	0.678	01579	-0.017	-0.0002	0.013	0.0095
1.30	11.41	-01.56	0.680	01582	-0.018	0.0003	0.012	0.0071
1.30	11.41	-01.04	0.679	01579	-0.019	0.0005	0.009	0.0048
1.30	11.41	-00.52	0.679	01577	-0.019	0.0006	0.008	0.0027
1.30	11.41	-00.01	0.680	01580	-0.019	0.0009	0.006	0.0005
1.30	11.41	00.50	0.679	01578	-0.019	0.0013	0.004	-0.0017
1.30	11.41	01.02	0.678	01578	-0.018	0.0014	0.002	-0.0040
1.30	11.41	01.54	0.679	01581	-0.018	0.0017	0.000	-0.0066
1.30	11.41	02.05	0.678	01581	-0.017	0.0018	-0.001	-0.0091
1.30	11.41	03.08	0.677	01584	-0.019	0.0022	-0.004	-0.0141
1.30	11.41	04.12	0.677	01591	-0.019	0.0028	-0.007	-0.0191
1.30	11.41	05.15	0.677	01601	-0.019	0.0035	-0.012	-0.0244
1.30	11.40	06.18	0.675	01610	-0.020	0.0039	-0.017	-0.0302
1.30	11.40	07.23	0.672	01620	-0.020	0.0045	-0.022	-0.0362
1.30	11.40	08.27	0.670	01636	-0.021	0.0049	-0.029	-0.0424
1.40	11.36	-05.18	0.633	01489	-0.014	0.0000	0.025	0.0258
1.40	11.36	-04.14	0.633	01484	-0.013	0.0005	0.021	0.0203
1.40	11.36	-03.11	0.632	01479	-0.012	0.0008	0.016	0.0151
1.40	11.36	-02.07	0.631	01478	-0.012	0.0006	0.013	0.0104
1.40	11.36	-01.56	0.632	01477	-0.012	0.0007	0.011	0.0080
1.40	11.36	-01.05	0.632	01477	-0.013	0.0009	0.010	0.0053
1.40	11.36	-00.52	0.633	01482	-0.013	0.0010	0.007	0.0029
1.40	11.36	-00.01	0.634	01485	-0.013	0.0010	0.005	0.0006
1.40	11.36	00.50	0.632	01486	-0.013	0.0010	0.003	-0.0017
1.40	11.36	01.02	0.633	01488	-0.012	0.0007	0.001	-0.0042
1.40	11.36	01.54	0.632	01485	-0.011	0.0008	-0.001	-0.0068
1.40	11.36	02.05	0.630	01492	-0.012	0.0006	-0.002	-0.0093
1.40	11.36	03.09	0.631	01503	-0.013	0.0007	-0.005	-0.0148
1.40	11.36	04.12	0.632	01518	-0.013	0.0009	-0.009	-0.0202
1.40	11.36	05.16	0.631	01534	-0.013	0.0010	-0.013	-0.0254
1.40	11.36	06.20	0.629	01551	-0.014	0.0016	-0.019	-0.0316
1.40	11.35	07.24	0.628	01573	-0.015	0.0023	-0.024	-0.0378
1.40	11.35	08.30	0.624	01599	-0.016	0.0029	-0.034	-0.0453

TABLE IV.- INDEX OF CONFIGURATION COMPARISONS, TABLES, AND FIGURES FOR THE LONGITUDINAL CHARACTERISTICS TESTS

Comparison	Aerodynamic characteristics		Configuration	Drawing of installation, figure no.
	Figure no.	Table II		
Basic model with and without horizontal tail	13	(a)	S_1	2
		(b)	S_1-H	---
Effect of change of wing camber with and without model horizontal tail	14	(a)	S_1	2
		(c)	S_2	2
		(b)	S_1-H	---
		(d)	S_2-H	---
Area-rule modification of fuselage	15	(a)	S_1	2
		(e)	S_3	2
Conventional missile M installations	16	(a)	S_1	2
		(g)	S_1M_{4T}	4(a)
		(h)	S_1M_{4F}	4(b)
		(i)	S_1M_{2F}	4(c)
		(j)	S_1M_{2T}	4(d)
Conventional missile N installations	17	(a)	S_1	2
		(k)	S_1N_{4T}	5(a)
		(l)	S_1N_{4W}	5(b)
		(m)	S_1N_{2T}	5(c)
Moment-of-area missile M installations	18	(a)	S_1	2
		(f)	S_1P_T	3
		(g)	S_1M_{4T}	4(a)
		(n)	S_4	2
		(o)	S_4P_M	6
		(p)	S_4M_{4M}	7
Fuel tank installations with and without model horizontal tail	19	(a)	S_1	2
		(q)	S_1T_T	8(a)
		(r)	$S_1T_TT_W$	8(b)
		(b)	S_1-H	---
		(s)	S_1T_T-H	---
		(t)	$S_1T_TT_W$-H	---
Bomb and gun-housing installations	20	(a)	S_1	2
		(u)	S_1A	9
		(v)	S_1G	10
Fuselage dive-flap installations with and without model horizontal tail	21	(a)	S_1	2
		(w)	S_1F_S	11(a)
		(x)	S_1F_U	11(b)
		(b)	S_1-H	---
		(y)	S_1F_S-H	---
		(z)	S_1F_U-H	---

A-19785

Figure 1.- Photograph of the model installed in the Ames 2-by 2-foot transonic wind tunnel.

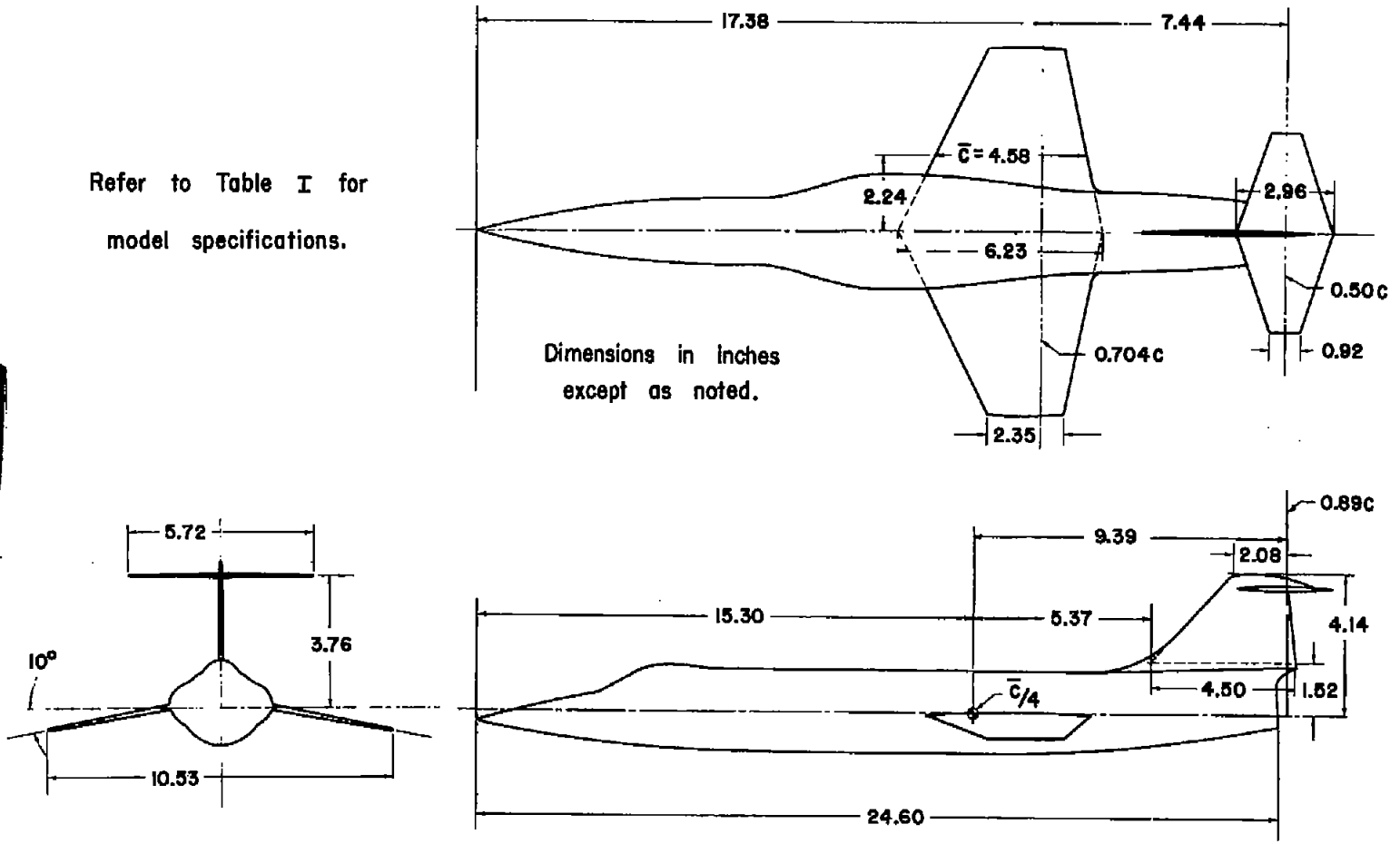

Figure 2.- Basic model geometry for the S_1, S_2, S_3, and S_4 configurations.

Missle pylon, P_T

length	5.57 in.
maximum frontal area	.075 in.^{2}

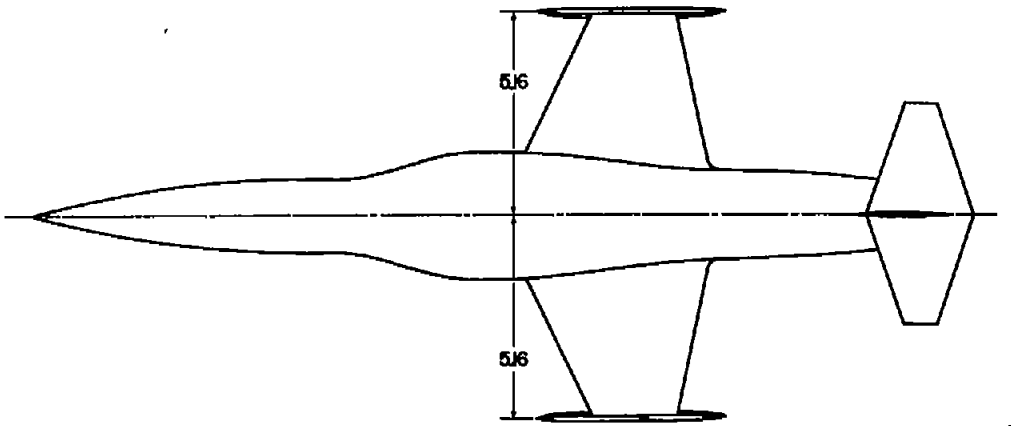

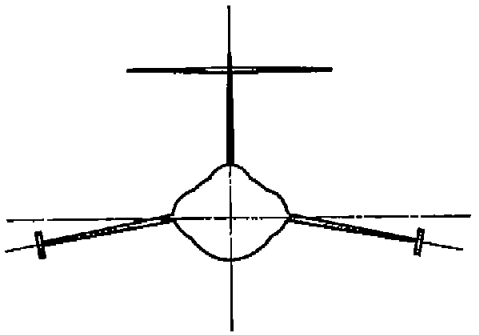

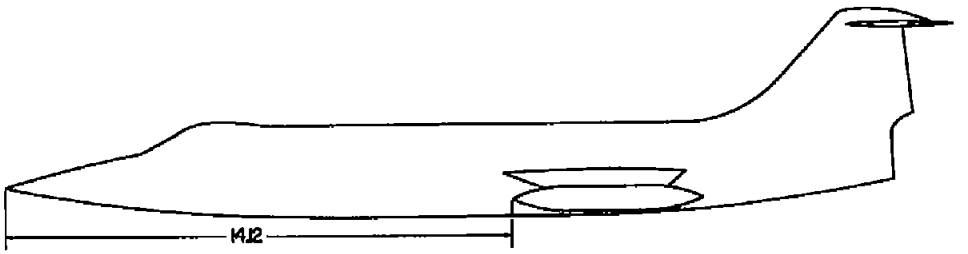

Figure 3.– Model with missile pylon installation, P_T.

[redacted]

Missle M

length	3.46	in.
maximum diameter	.256	in.
maximum frontal area	.052	$in.^2$

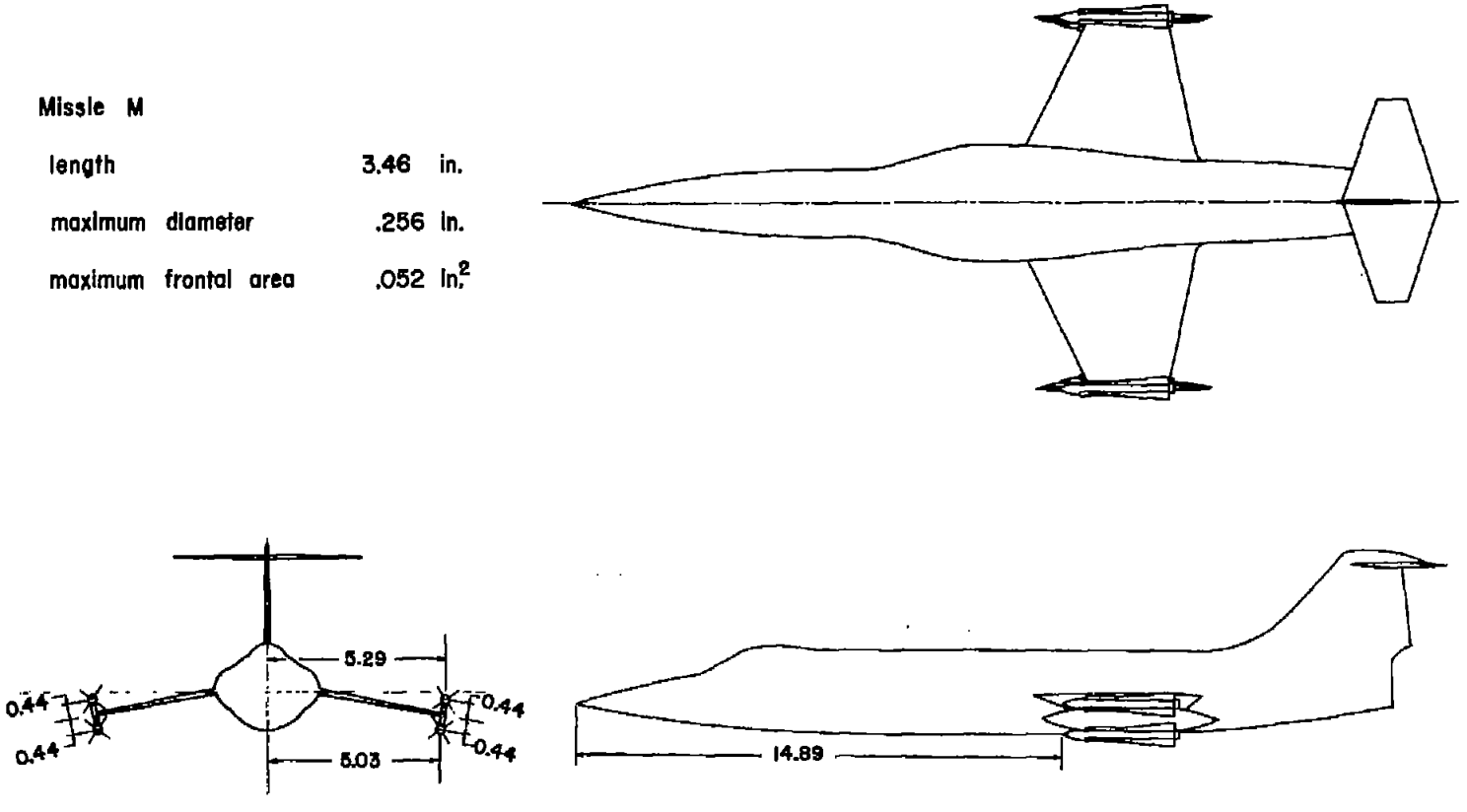

[redacted]

(a) S_1 M_{4T}

Figure 4.- Model with four missile M installations.

[redacted]

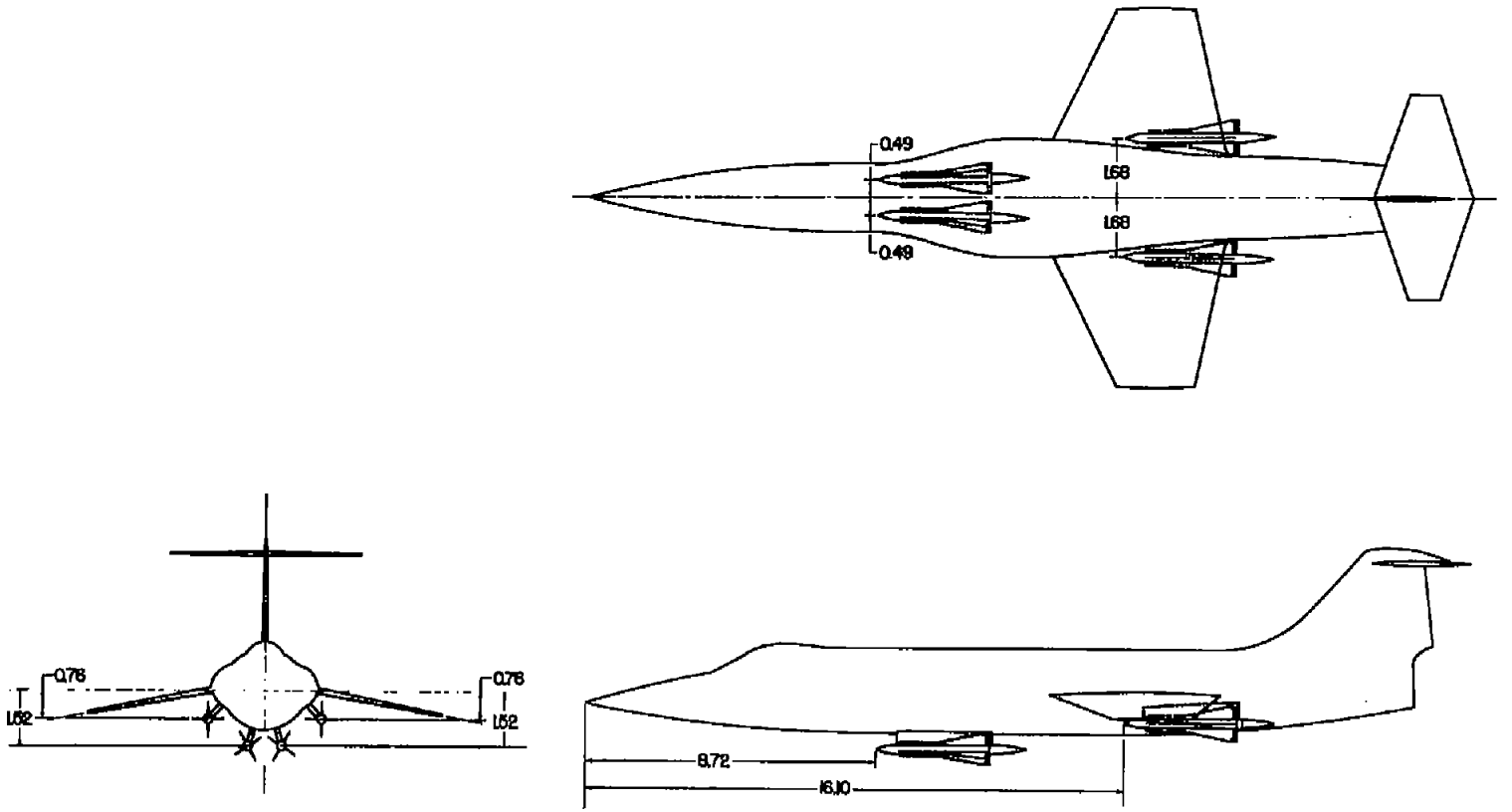

[redacted]

(b) $S_1 M_{4F}$

Figure 4.- Continued.

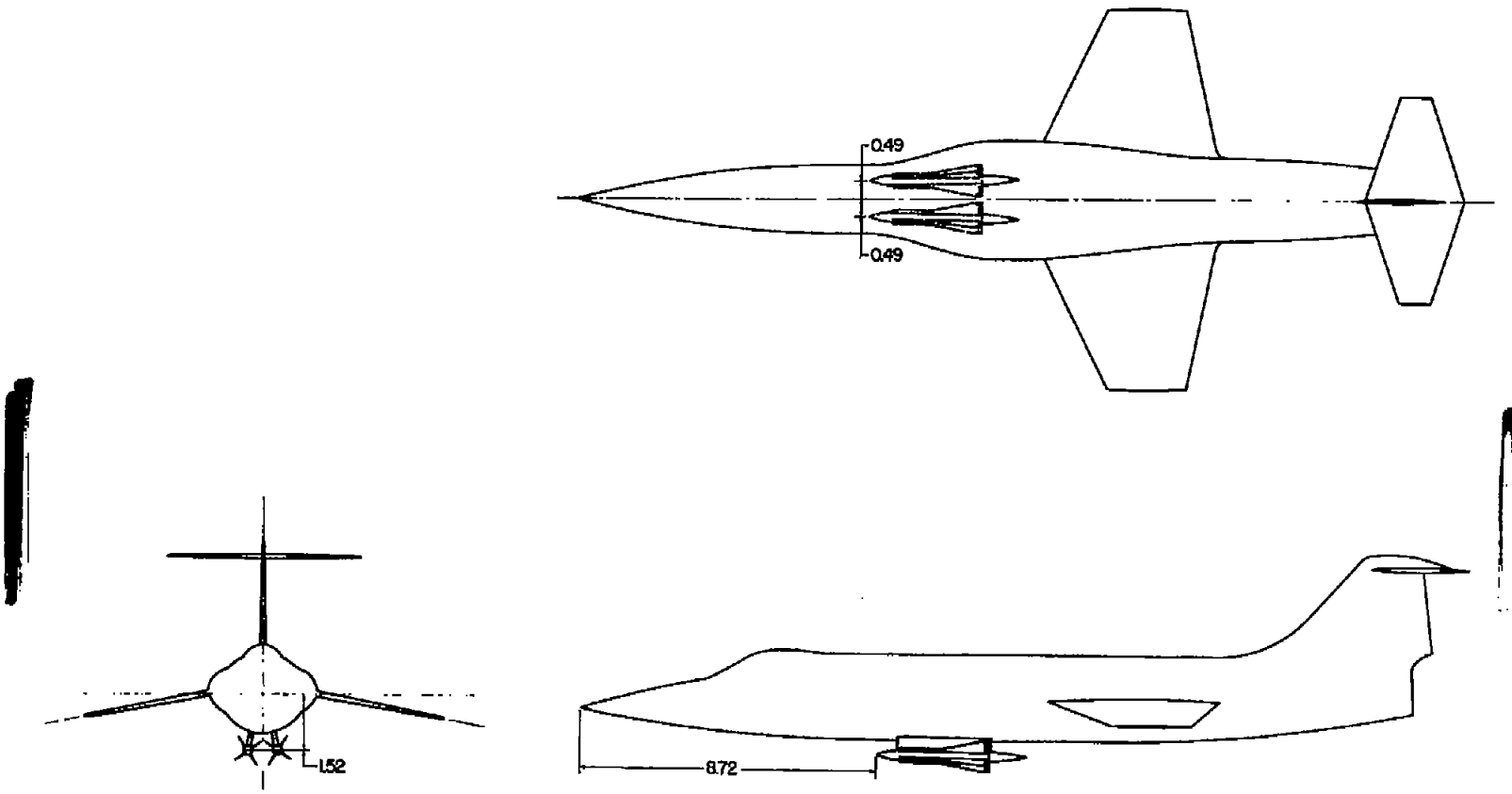

(c) $S_1 M_{2F}$

Figure 4.- Continued.

[redacted]

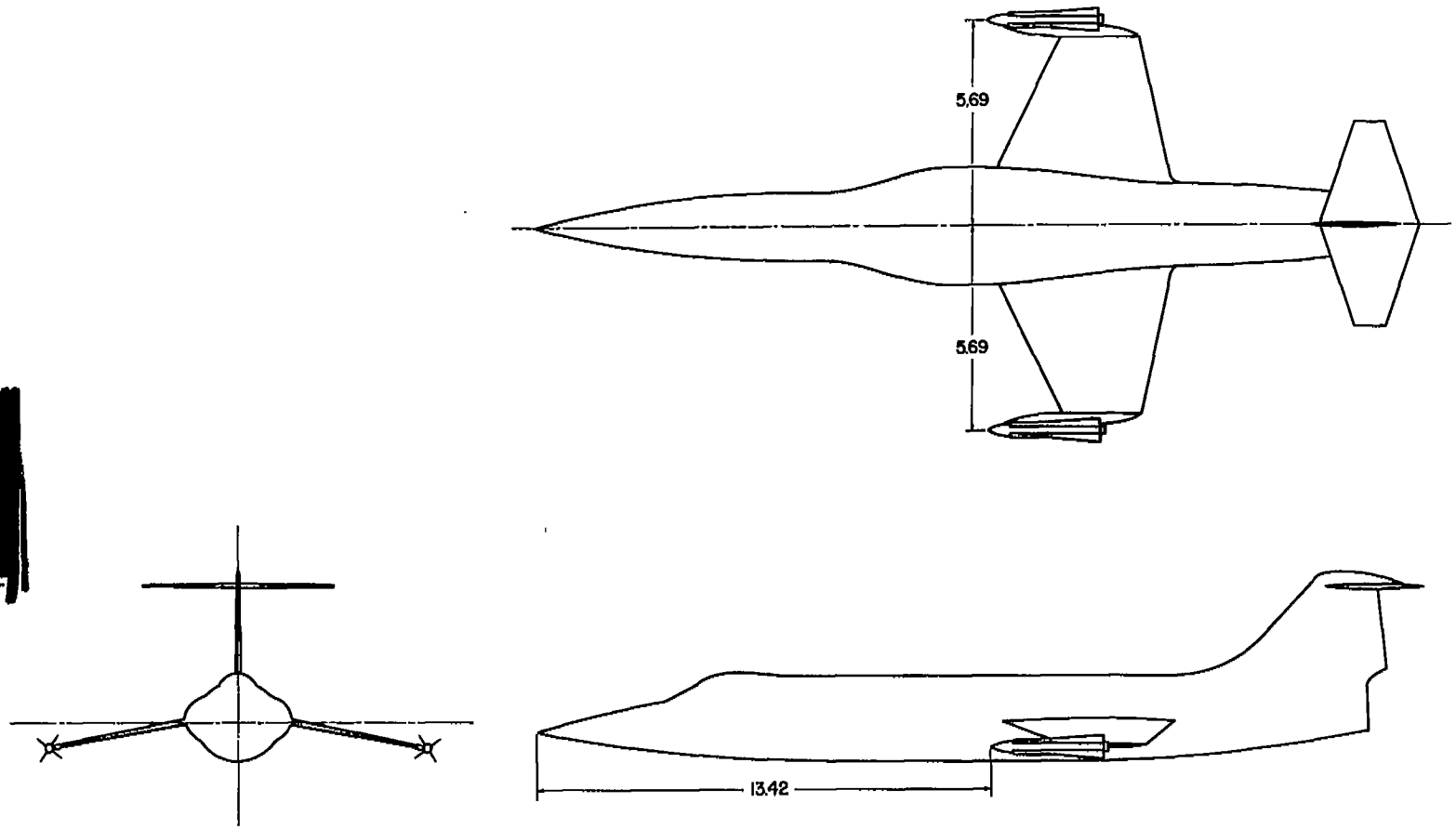

(d) $S_1 M_2 T$

Figure 4.- Concluded.

[redacted]

[redacted]

Missle N

length	5.20	in.
maximum diameter	.20	in.
maximum frontal area	.031	$in.^2$

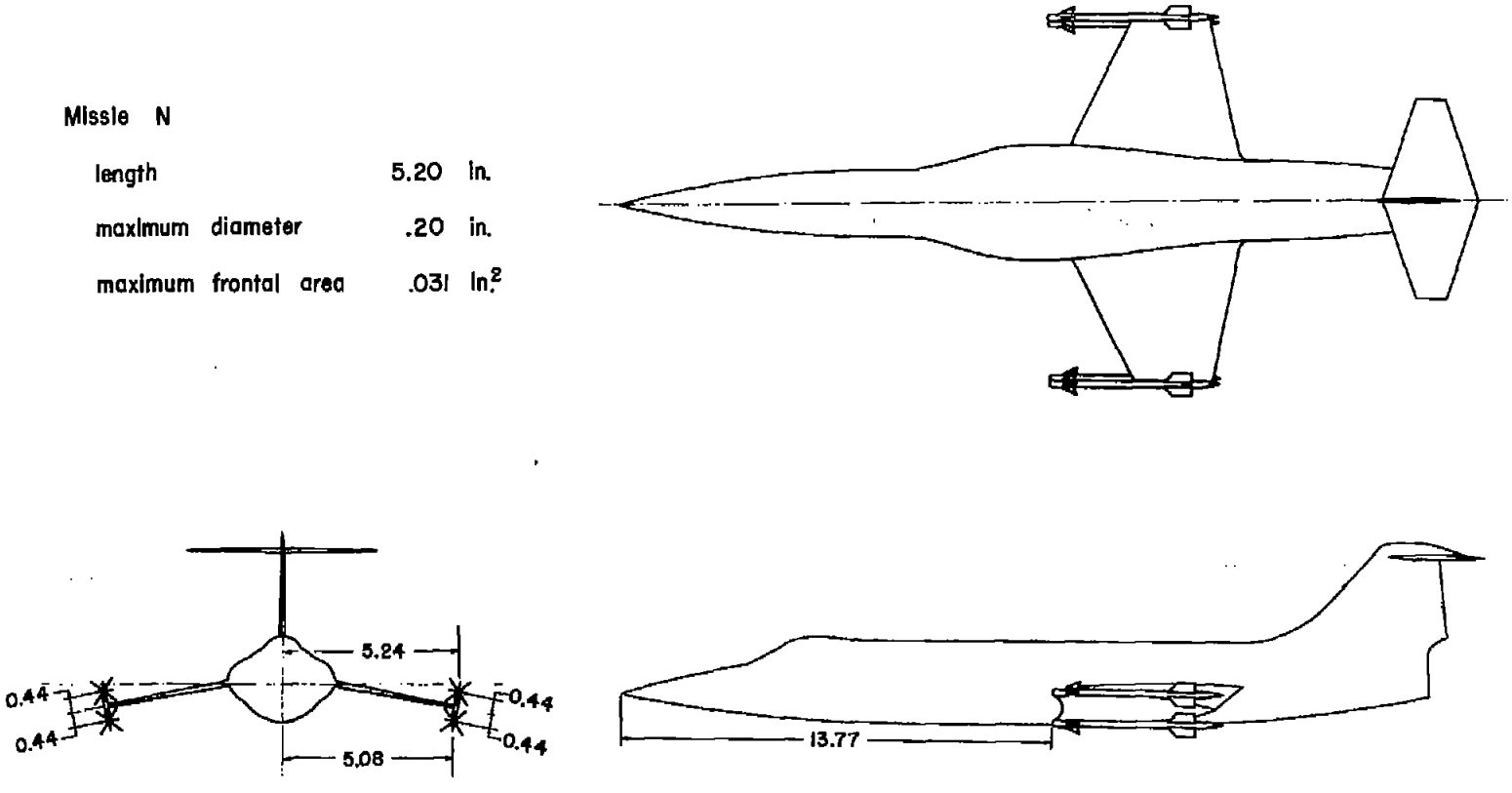

[redacted]

(a) $S_1 N_{4T}$

Figure 5.- Model with three missile N installations.

[redacted]

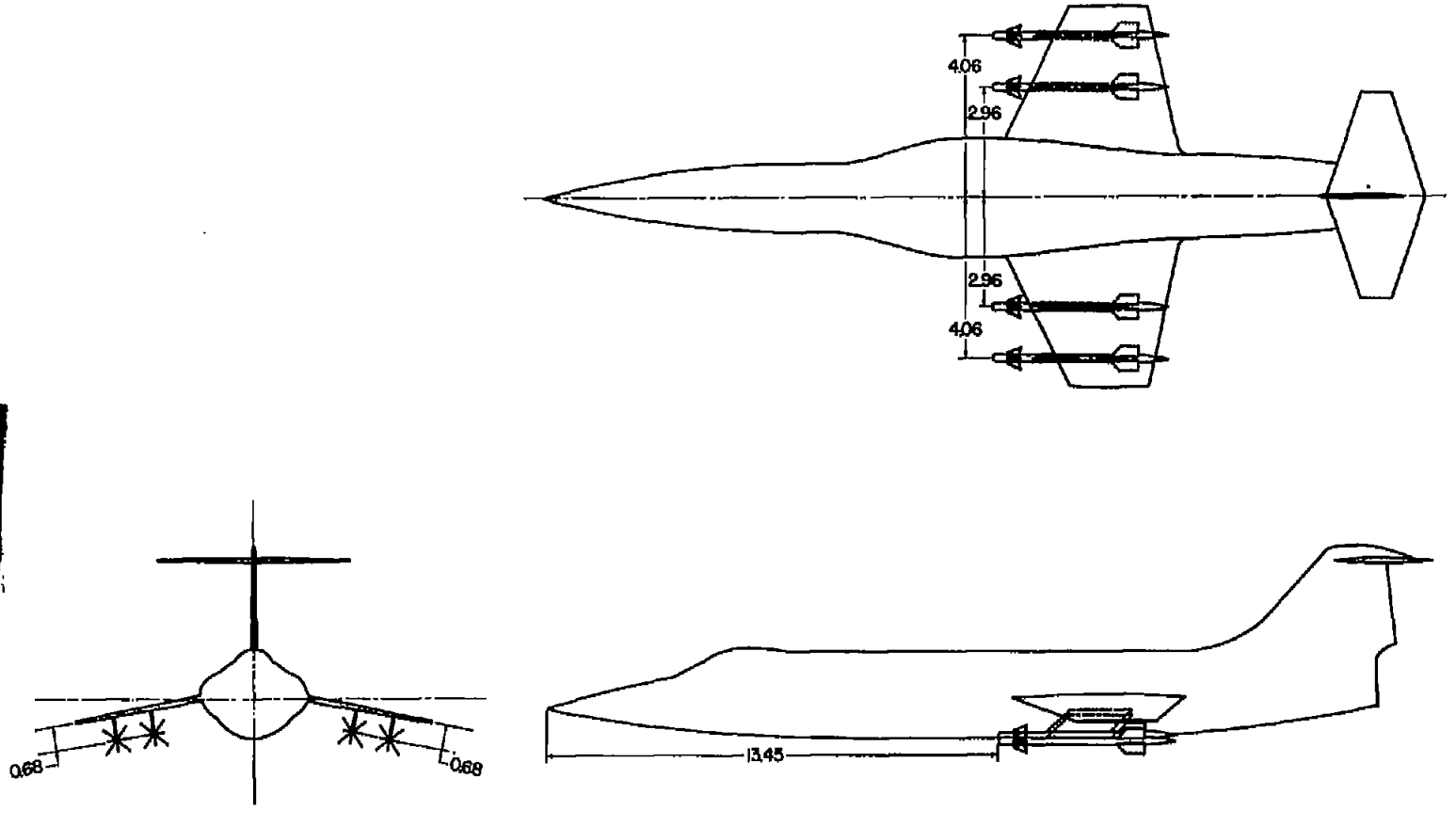

(b) S_1 N_{4W}

Figure 5.- Continued.

[redacted]

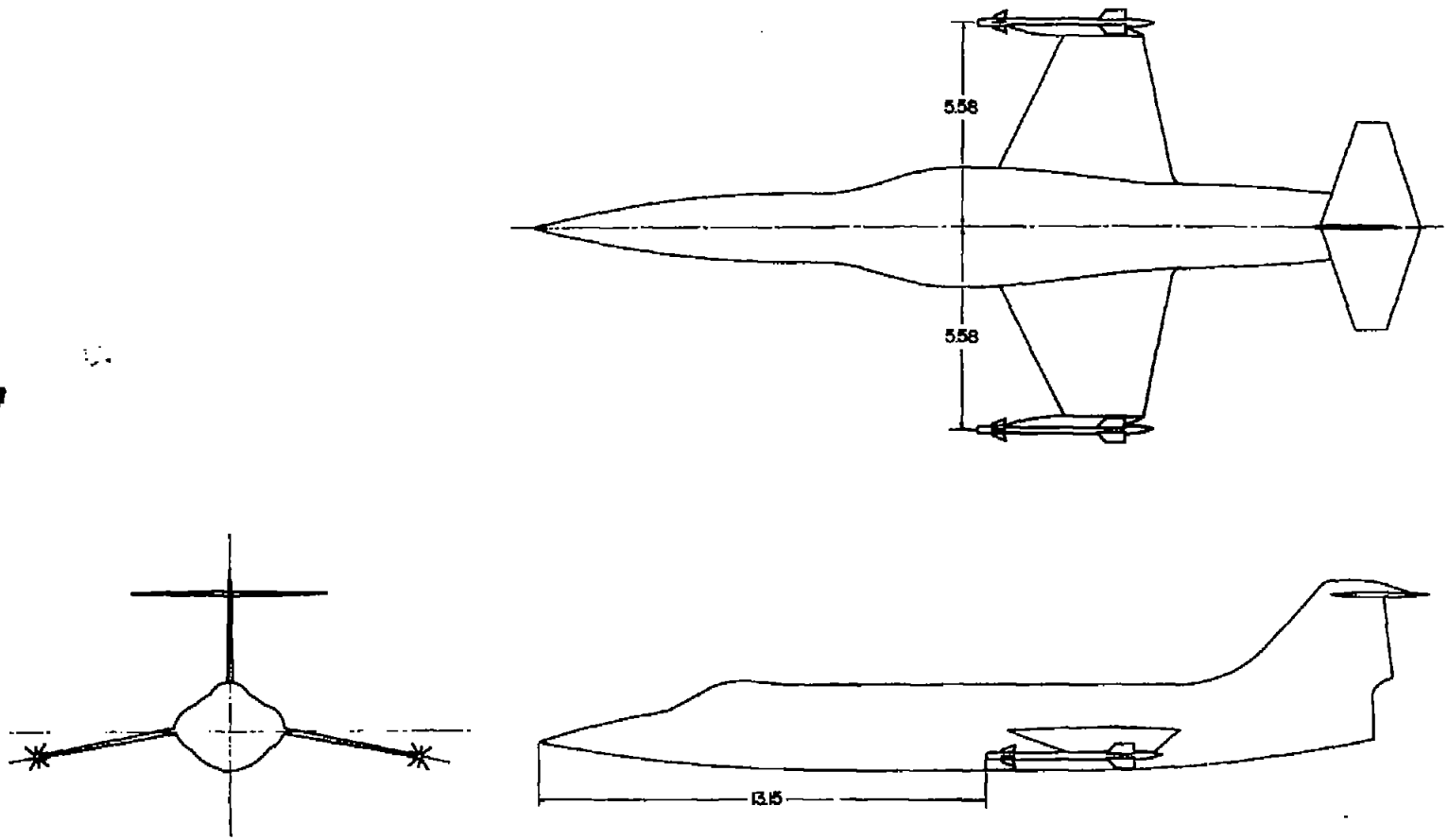

(c) $S_1 N_{2T}$

Figure 5.- Concluded.

[redacted]

Missle pylon, P_M

length	12.00 in.
maximum frontal area	.246 in.^{2}

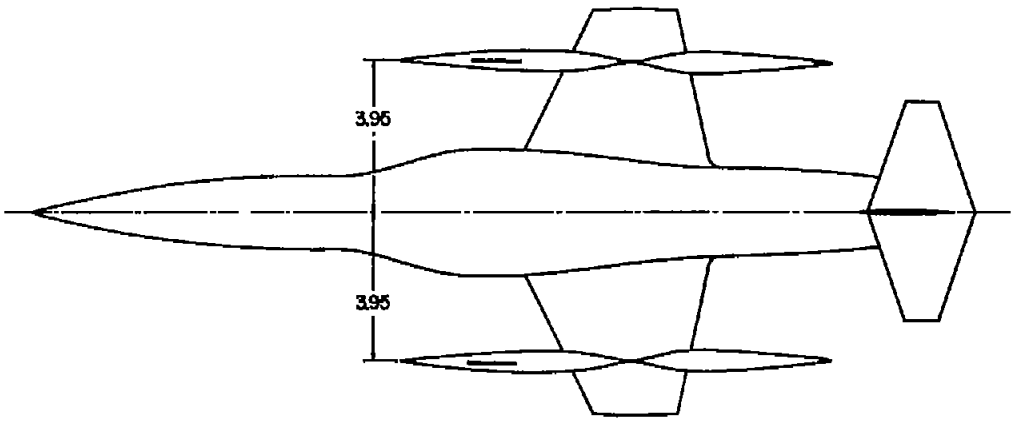

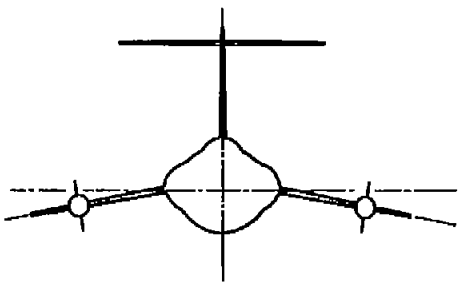

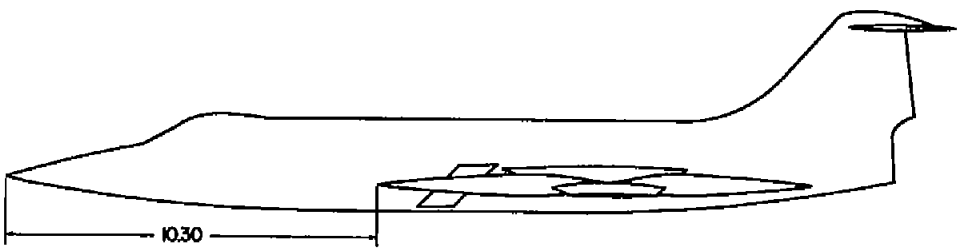

[redacted]

Figure 6.- Model with moment-of-area-rule missile pod and pylon installation, P_M.

[redacted]

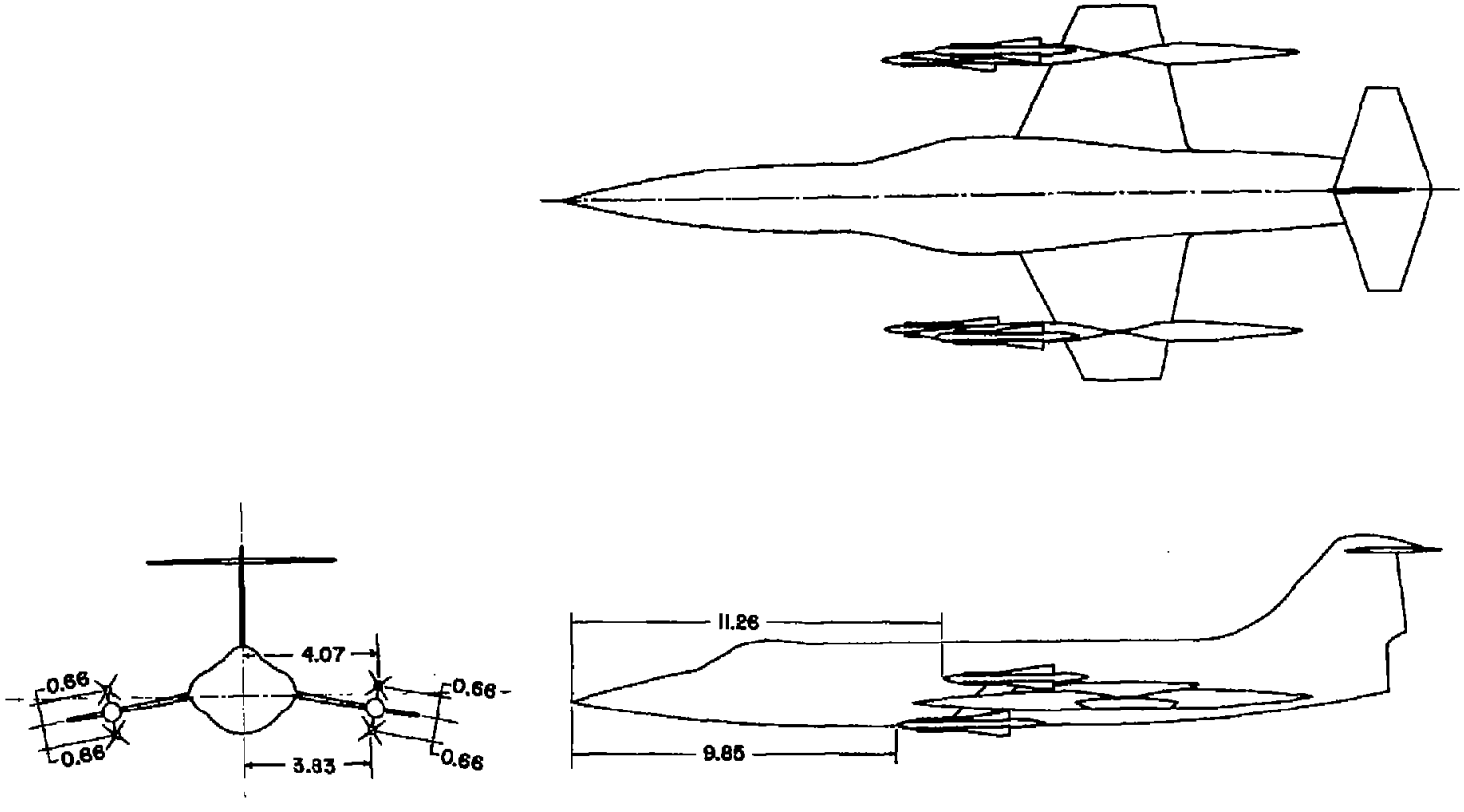

Figure 7.- Model with missile M moment-of-area-rule installation, $S_4 M_{4M}$.

[redacted]

Fuel tank, T_T or T_W

length	8.37 in.
maximum diameter	.80 in.
maximum frontal area	.50 in.^{2}

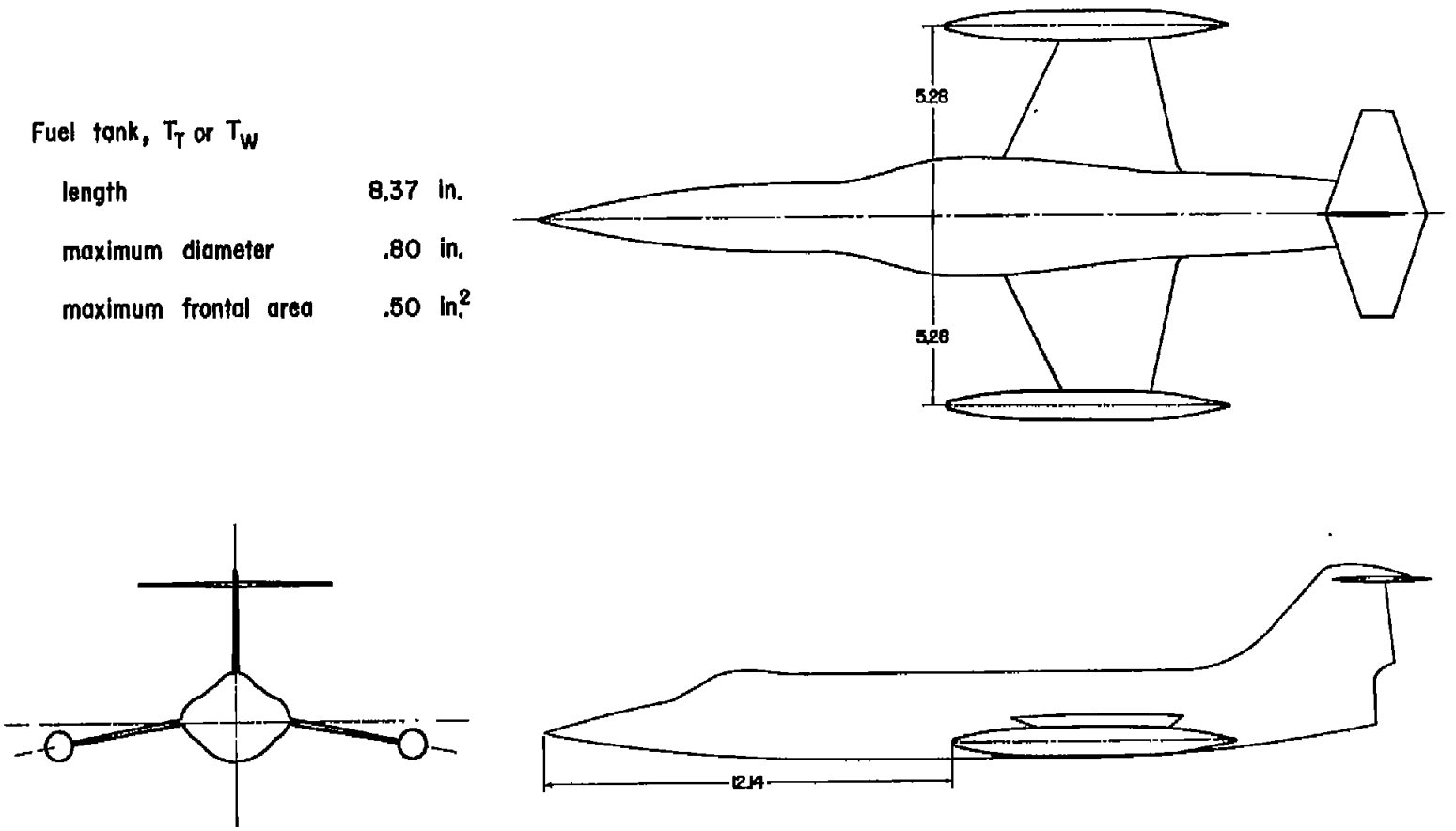

(a) S_1 T_T

Figure 8.- Model with two external fuel tank installations.

[redacted]

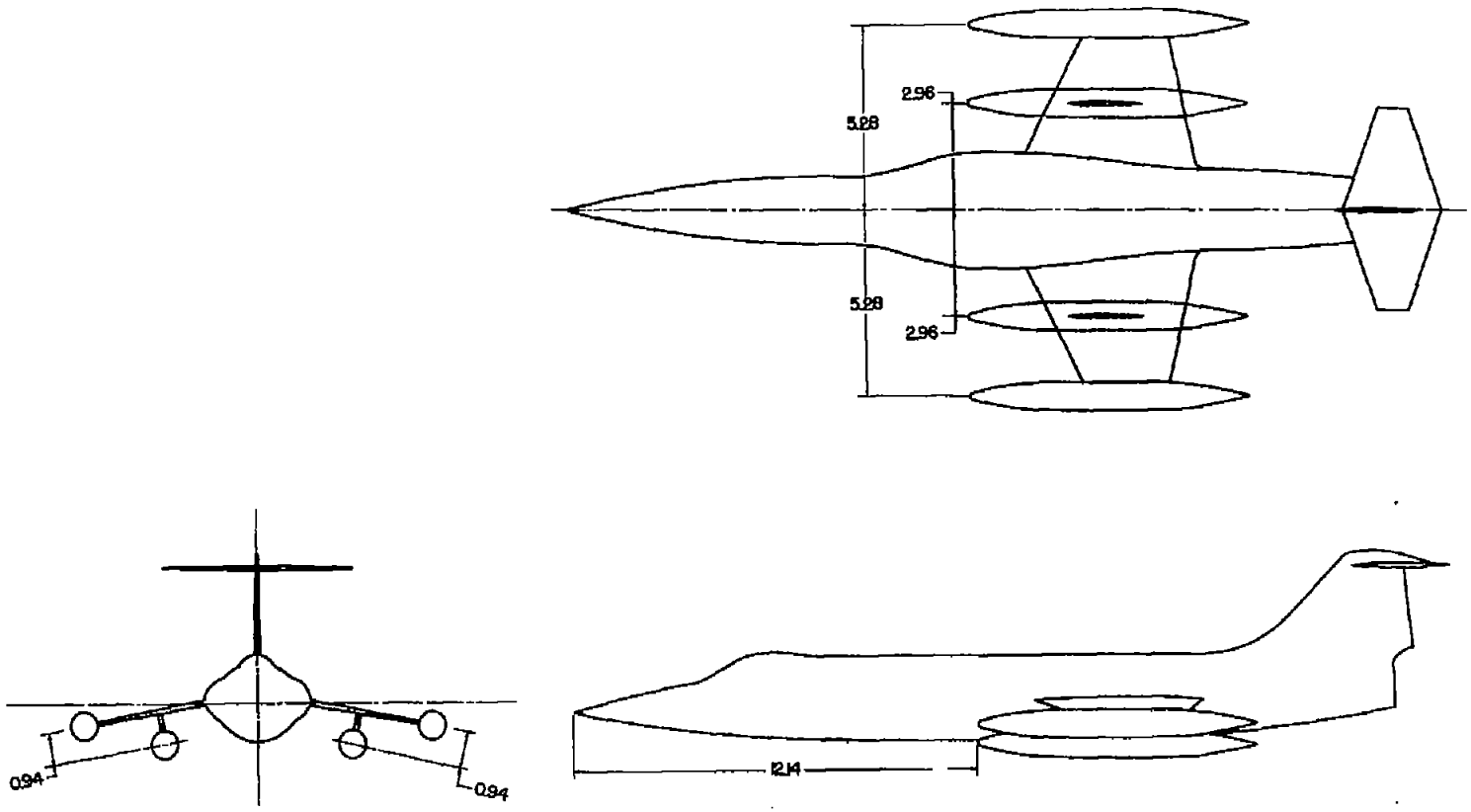

(b) $S_I\ T_T\ T_W$

Figure 8.- Concluded.

[redacted]

Bomb, A

length	6.20 in.
maximum diameter	.88 in.
maximum frontal area	.61 in.^{2}

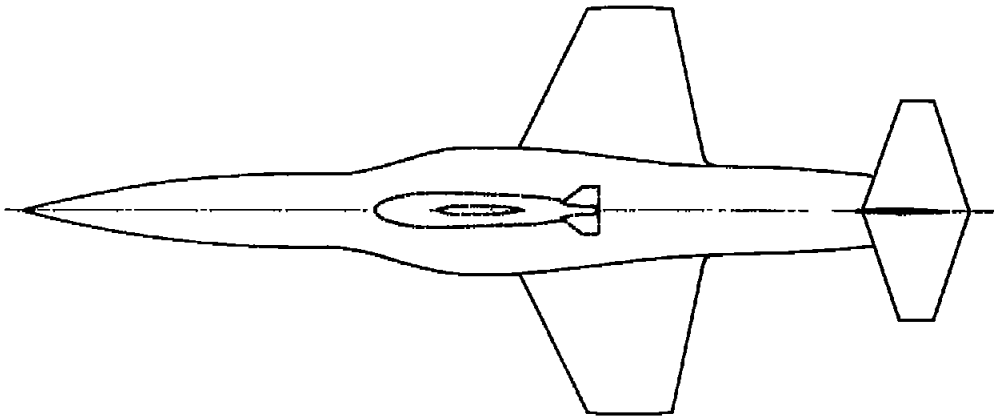

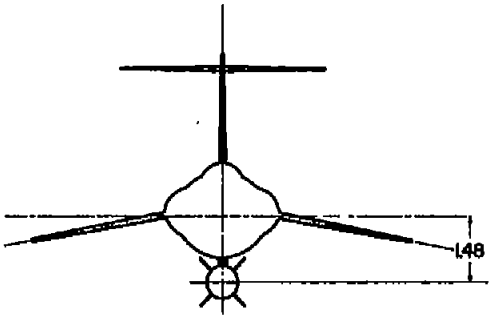

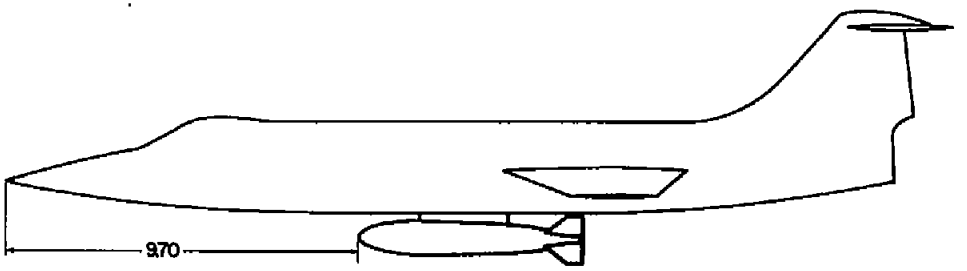

Figure 9.- Model with bomb installation, S_1A.

Gun housing, G

length	7.48 in.
maximum frontal area	.76 in.^{2}

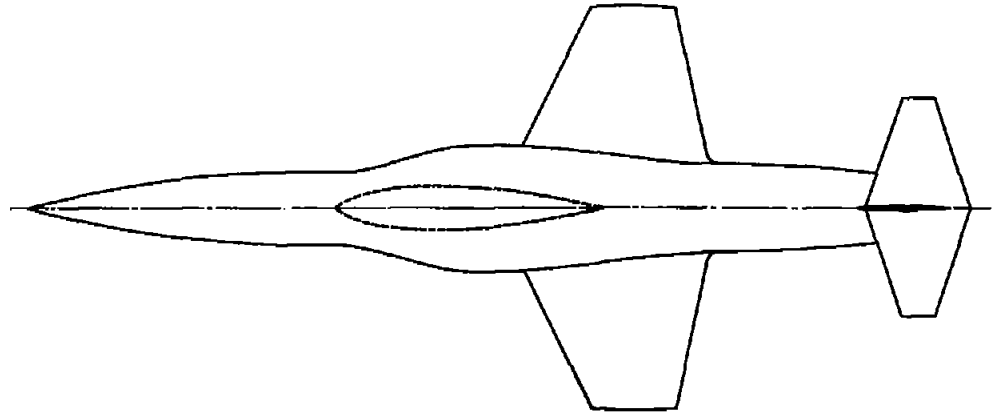

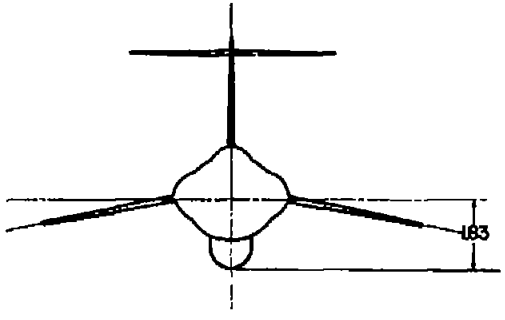

Figure 10.- Model with gun-housing installation, S_1G.

Dive flap, F_S or F_U

projected frontal area per flap	1.54 $in.^2$
extension angle	60°

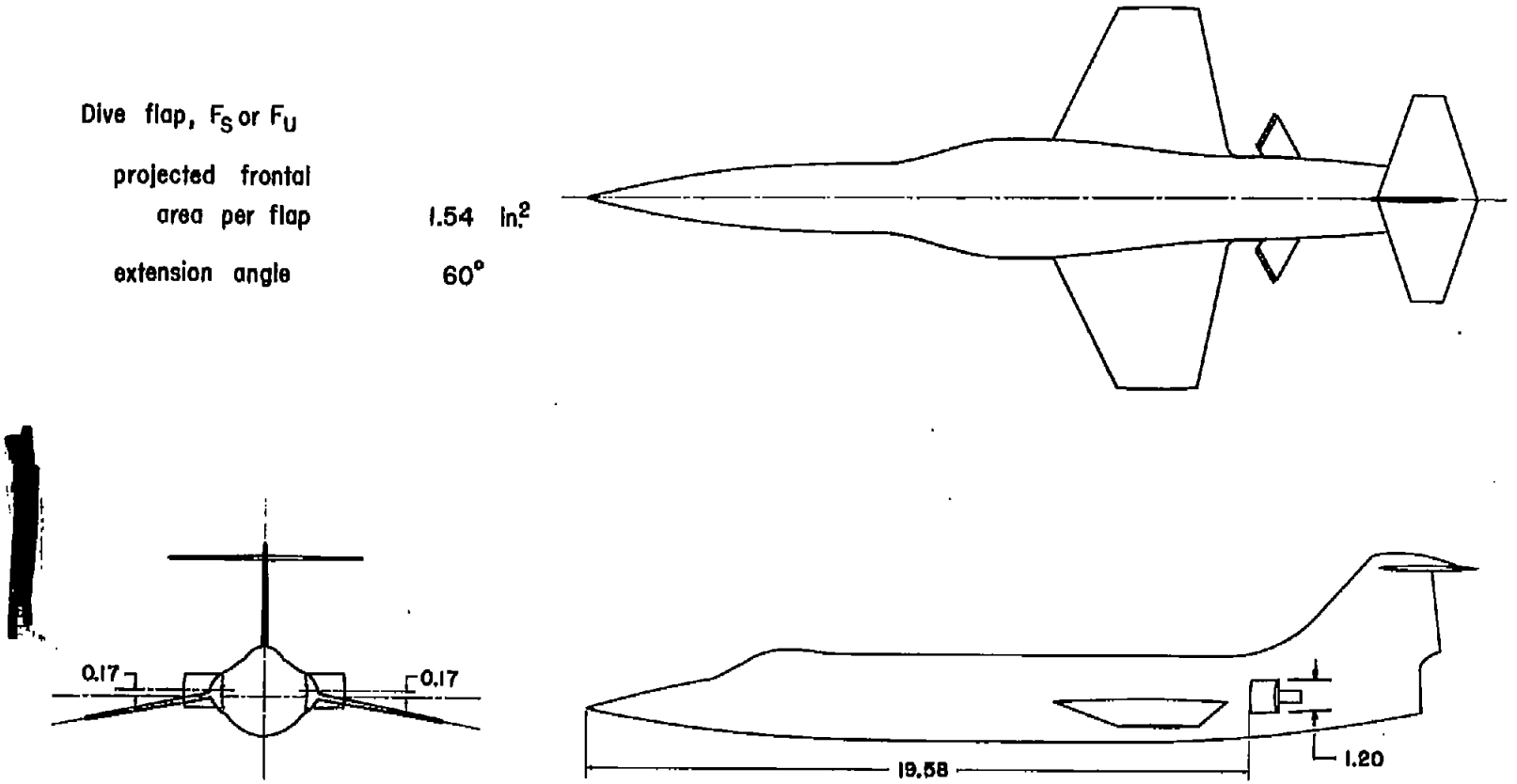

(a) S_1 F_S

Figure 11.- Model with two dive-flap installations.

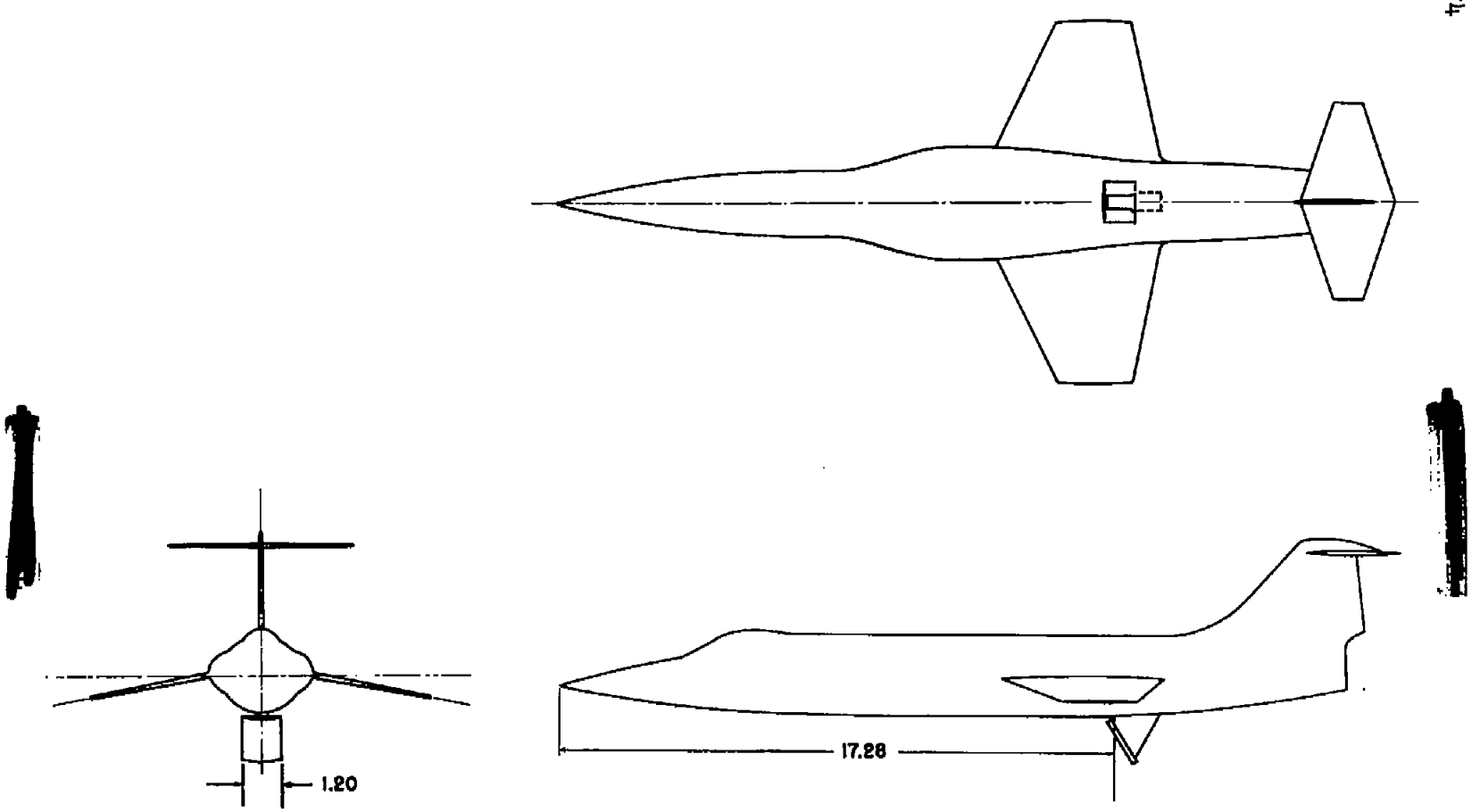

(b) $S_1 F_U$

Figure 11.- Concluded.

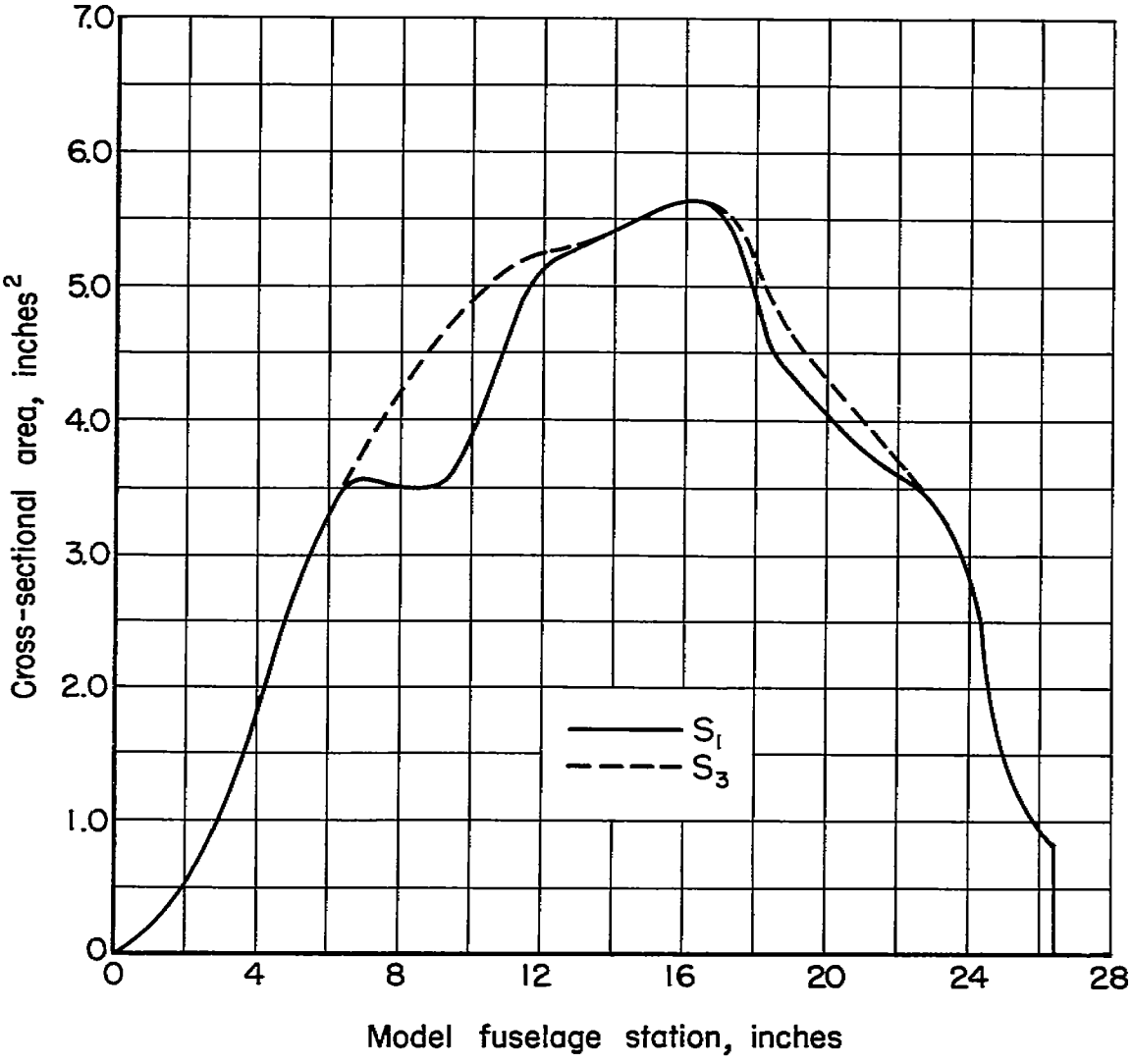

(a) Cross-sectional-area distribution of S_1 and S_3.

Figure 12.- Cross-sectional-area and second-moment-of-area distributions of the basic model and other configurations.

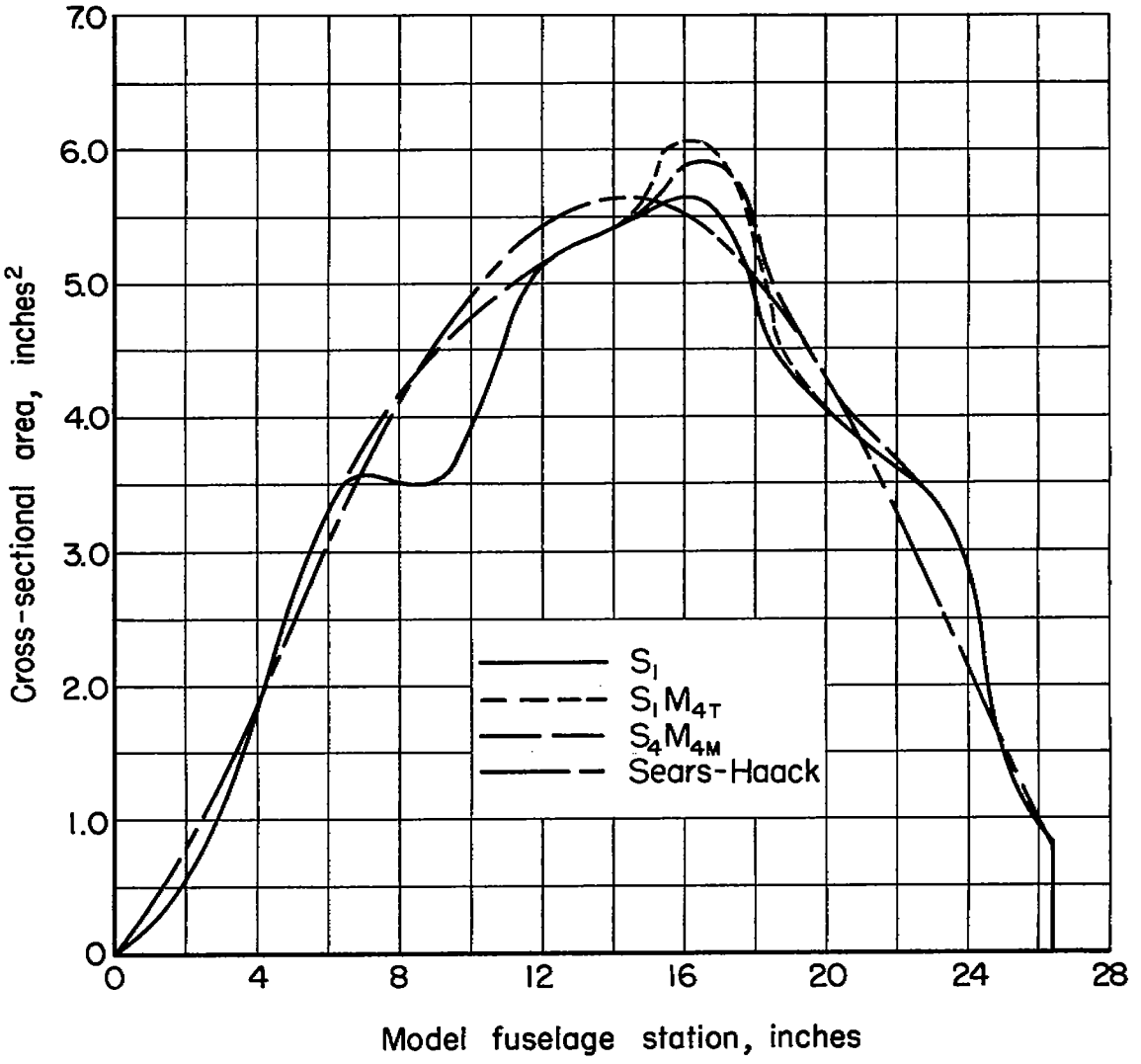

(b) Cross-sectional-area distribution of S_1, S_1M_{4T}, S_4M_{4M}, and a comparable Sears-Haack theoretical distribution.

Figure 12.- Continued.

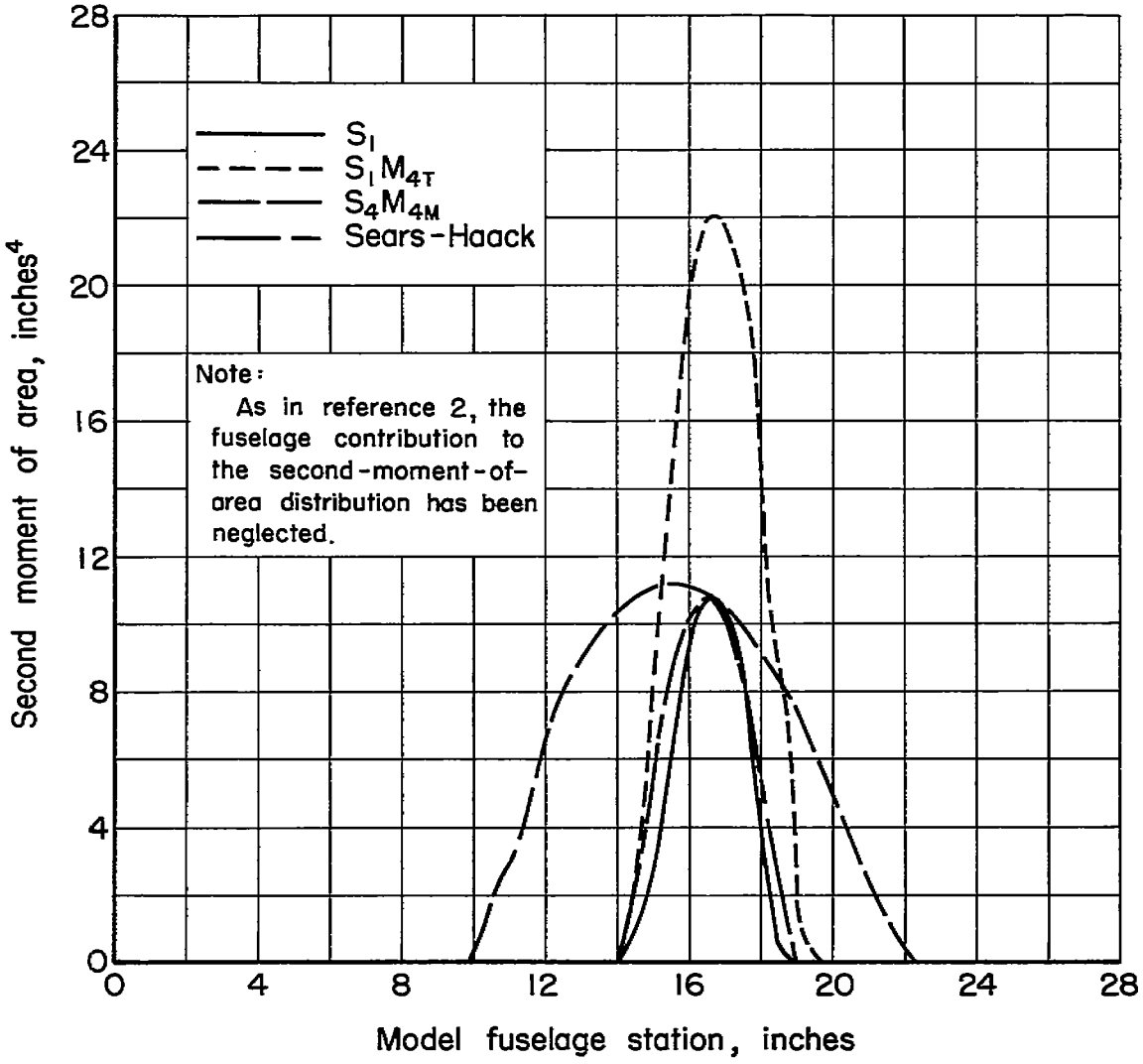

(c) Second-moment-of-area distribution of S_1, $S_1 M_{4T}$, $S_4 M_{4M}$, and a comparable Sears-Haack theoretical distribution.

Figure 12.- Concluded.

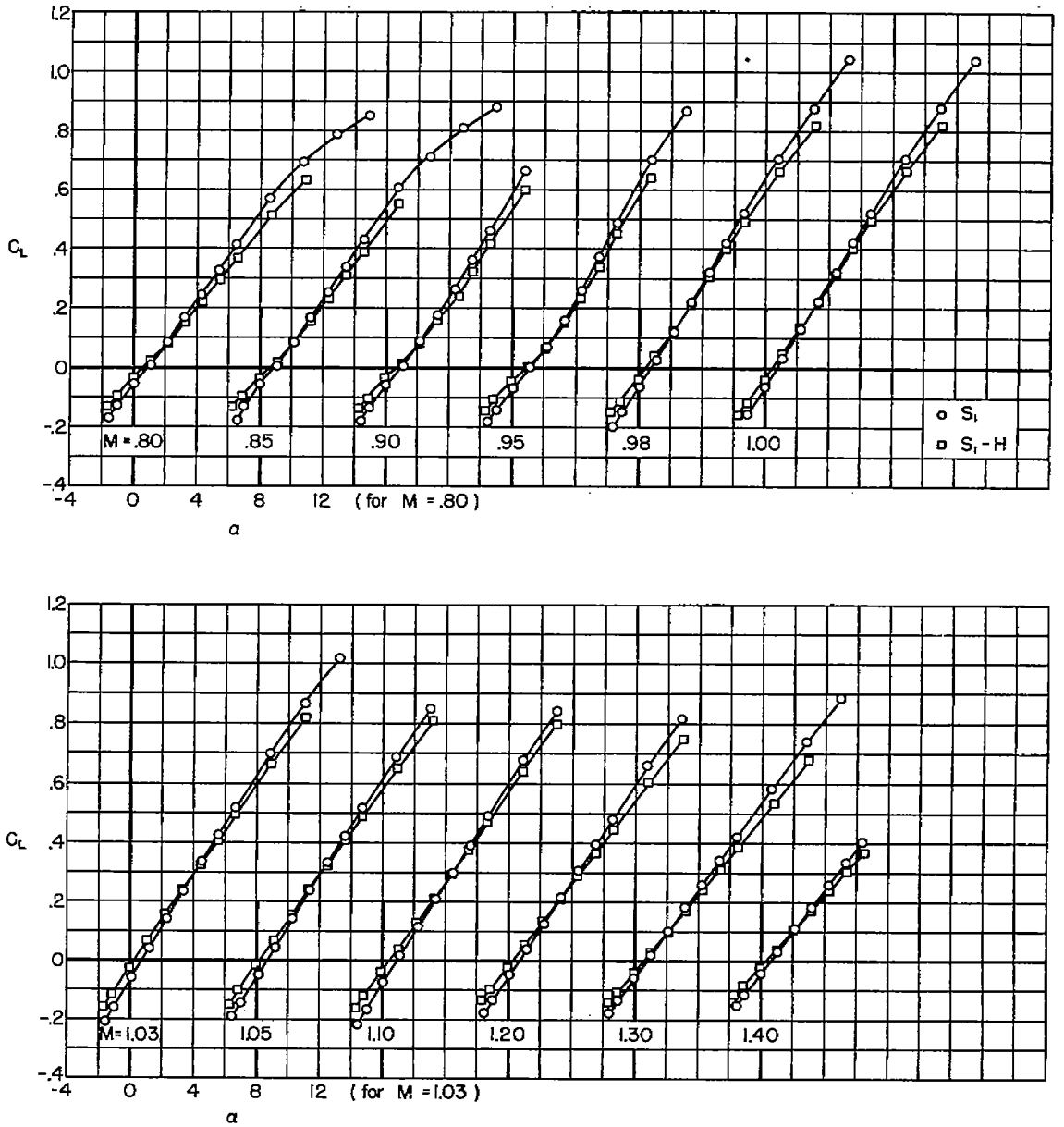

(a) C_L vs. α

Figure 13.- Variation of lift coefficient with angle of attack, drag coefficient, and pitching-moment coefficient at constant Mach number for the basic model configuration.

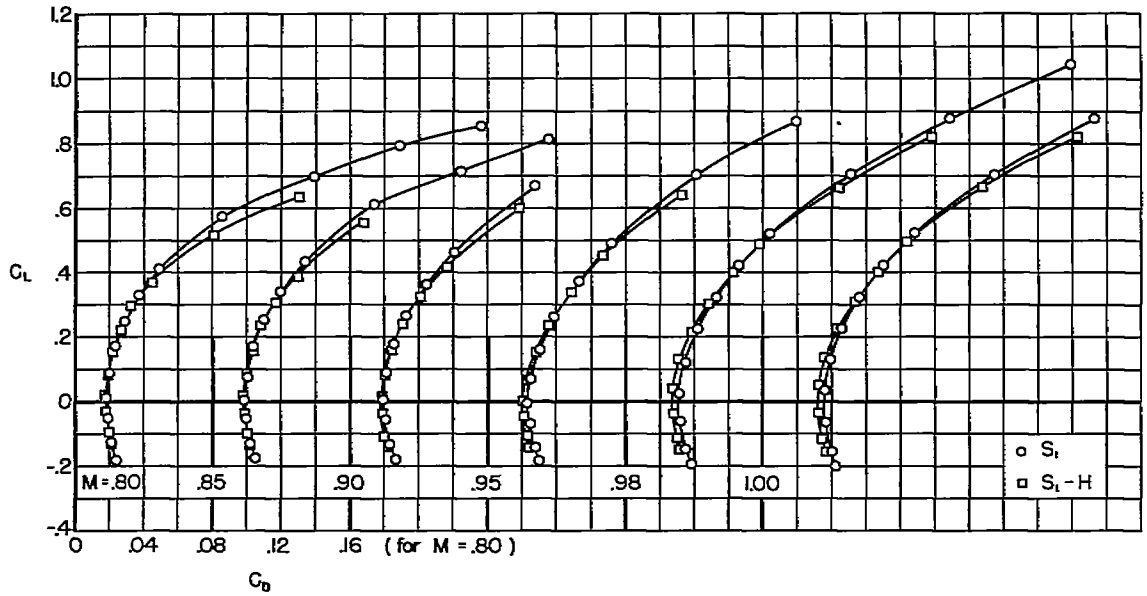

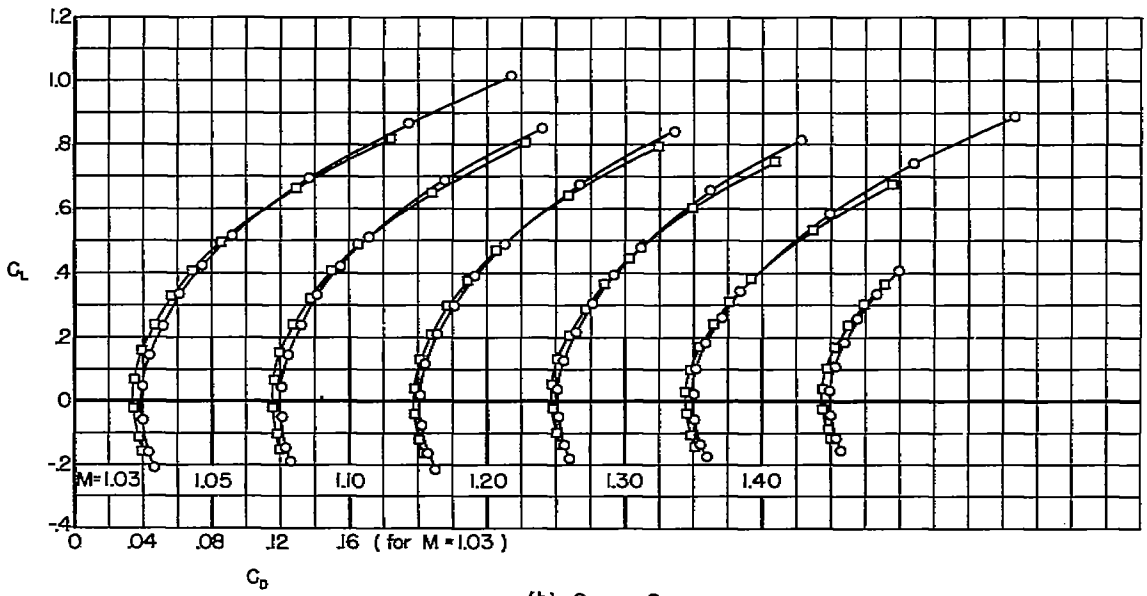

(b) C_L vs. C_D

Figure 13.- Continued.

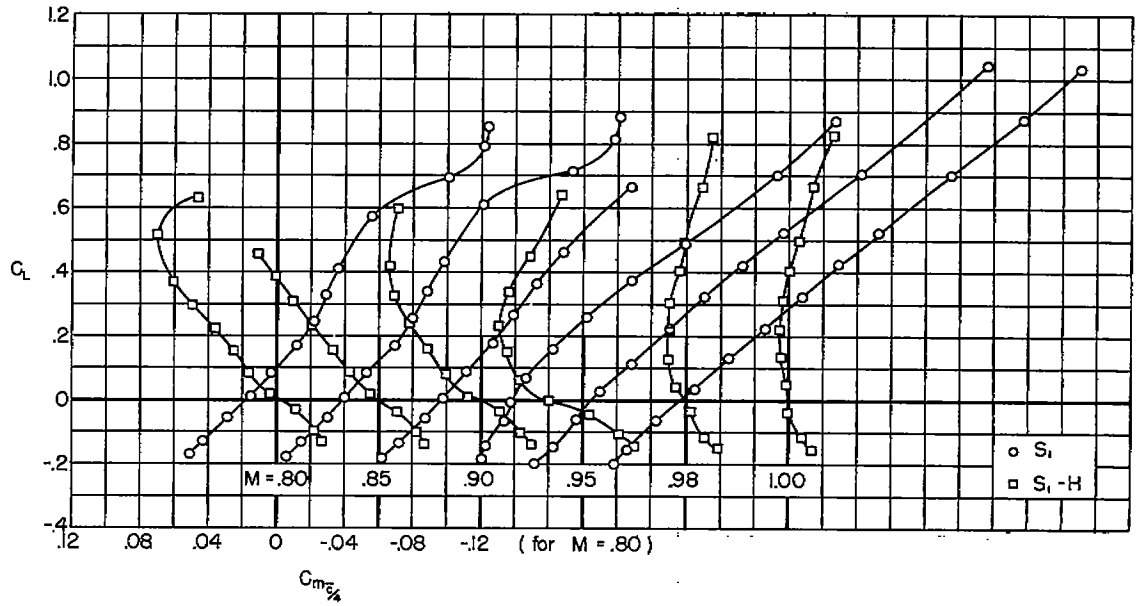

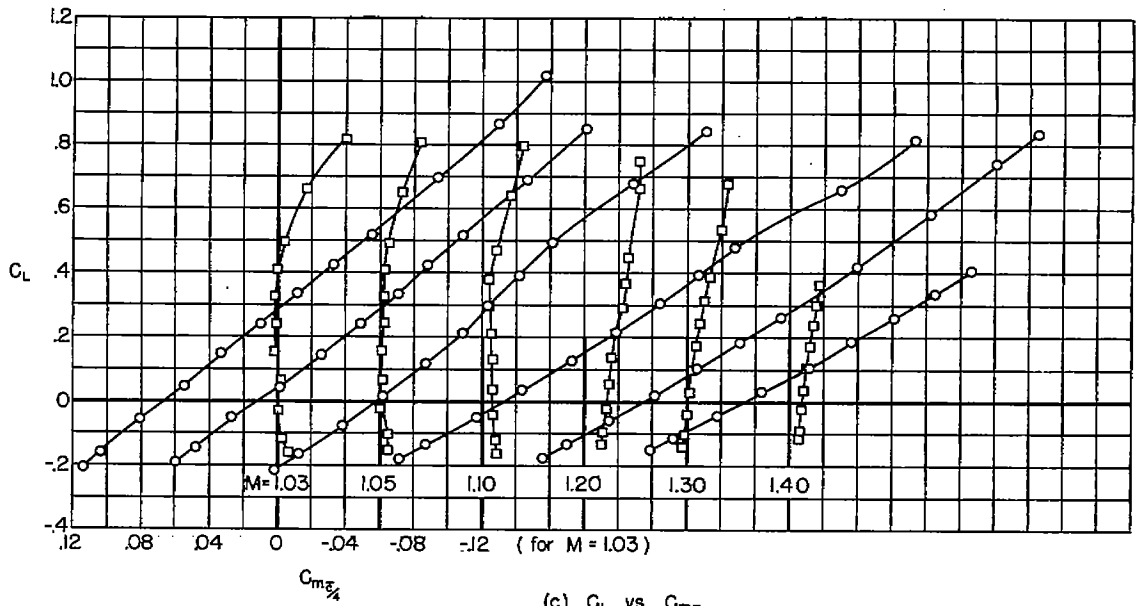

(c) C_L vs. $C_{m_{\bar{c}/4}}$

Figure 13.– Concluded.

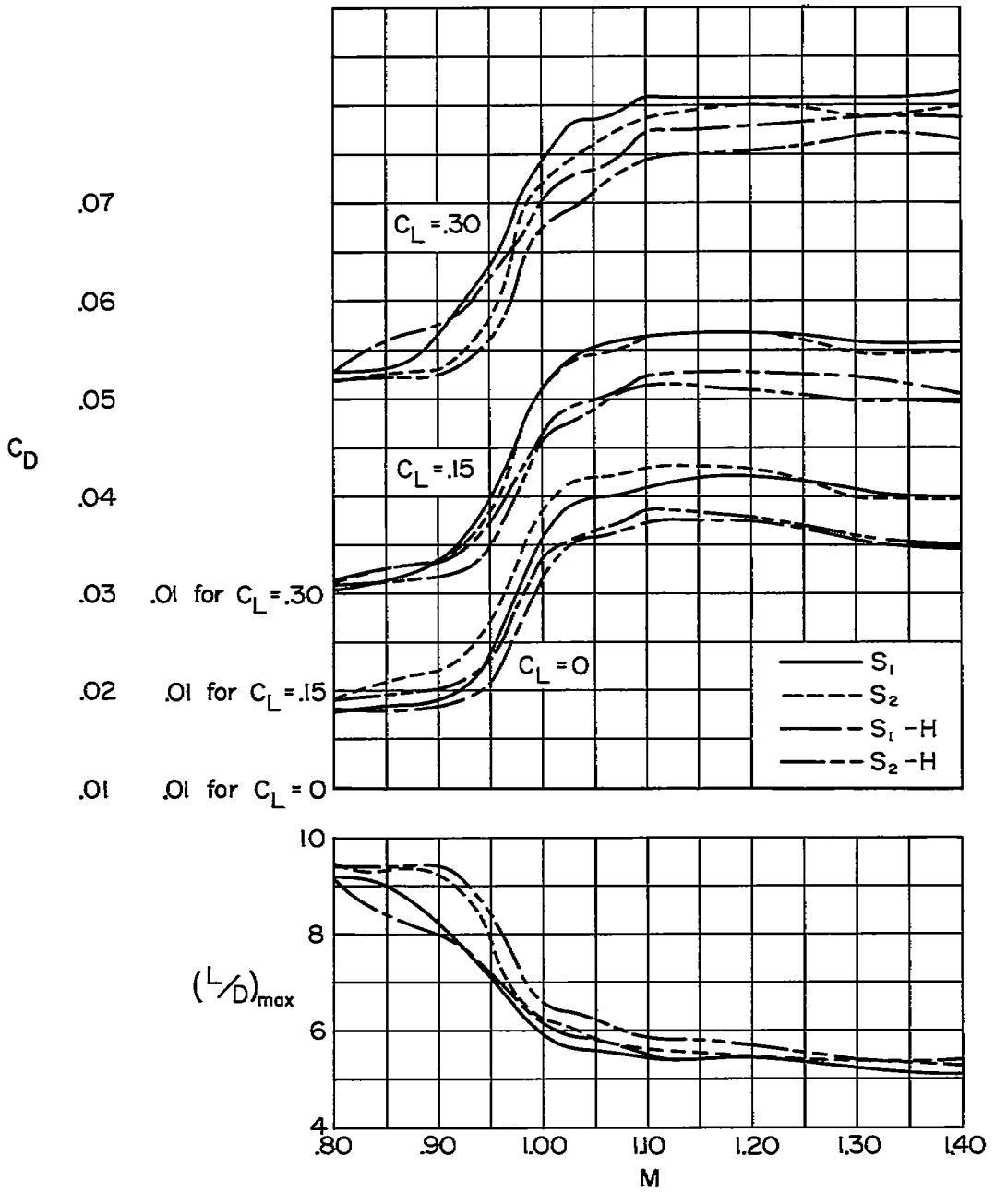

(a) C_D and $(L/D)_{max}$

Figure 14.- The variation with Mach number of longitudinal aerodynamic characteristics of the model with two types of cambered wings.

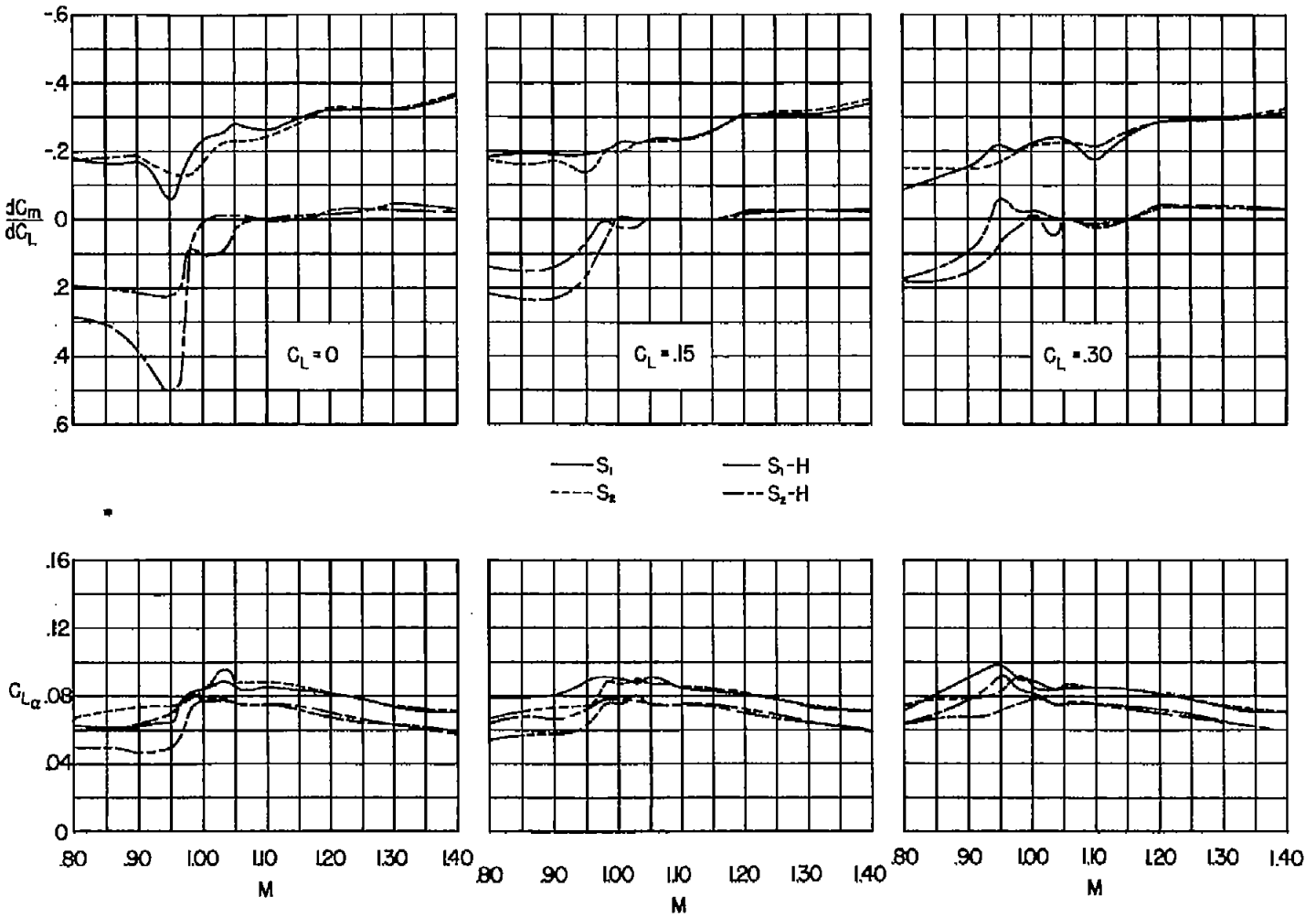

(b) $\frac{dC_m}{dC_L}$ and C_{L_α}

Figure 14. - Concluded.

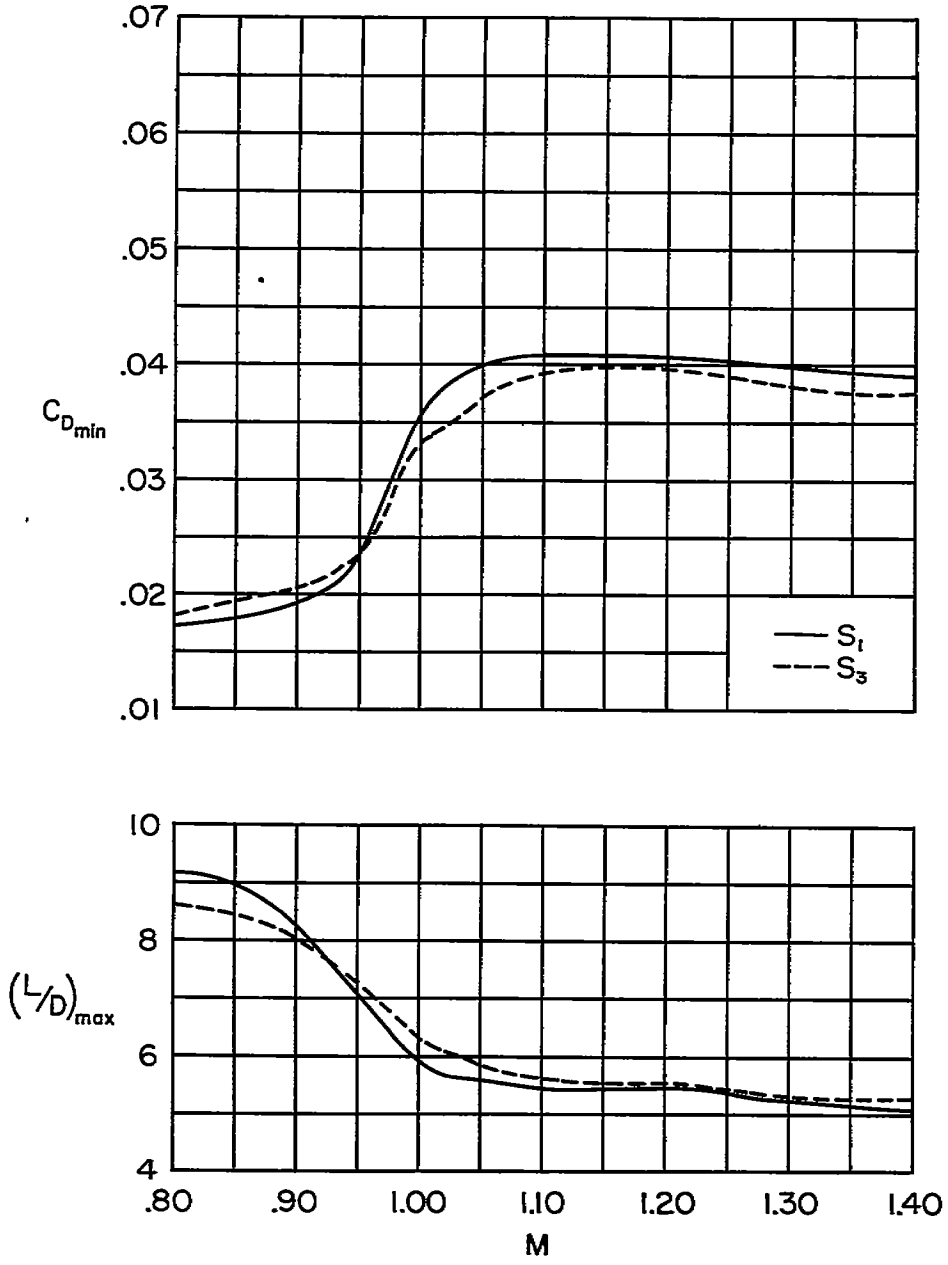

(a) $C_{D_{min}}$ and $(L/D)_{max}$

Figure 15.- The variation with Mach number of longitudinal aerodynamic characteristics of the basic model and the configuration having the fuselage modified according to the area rule.

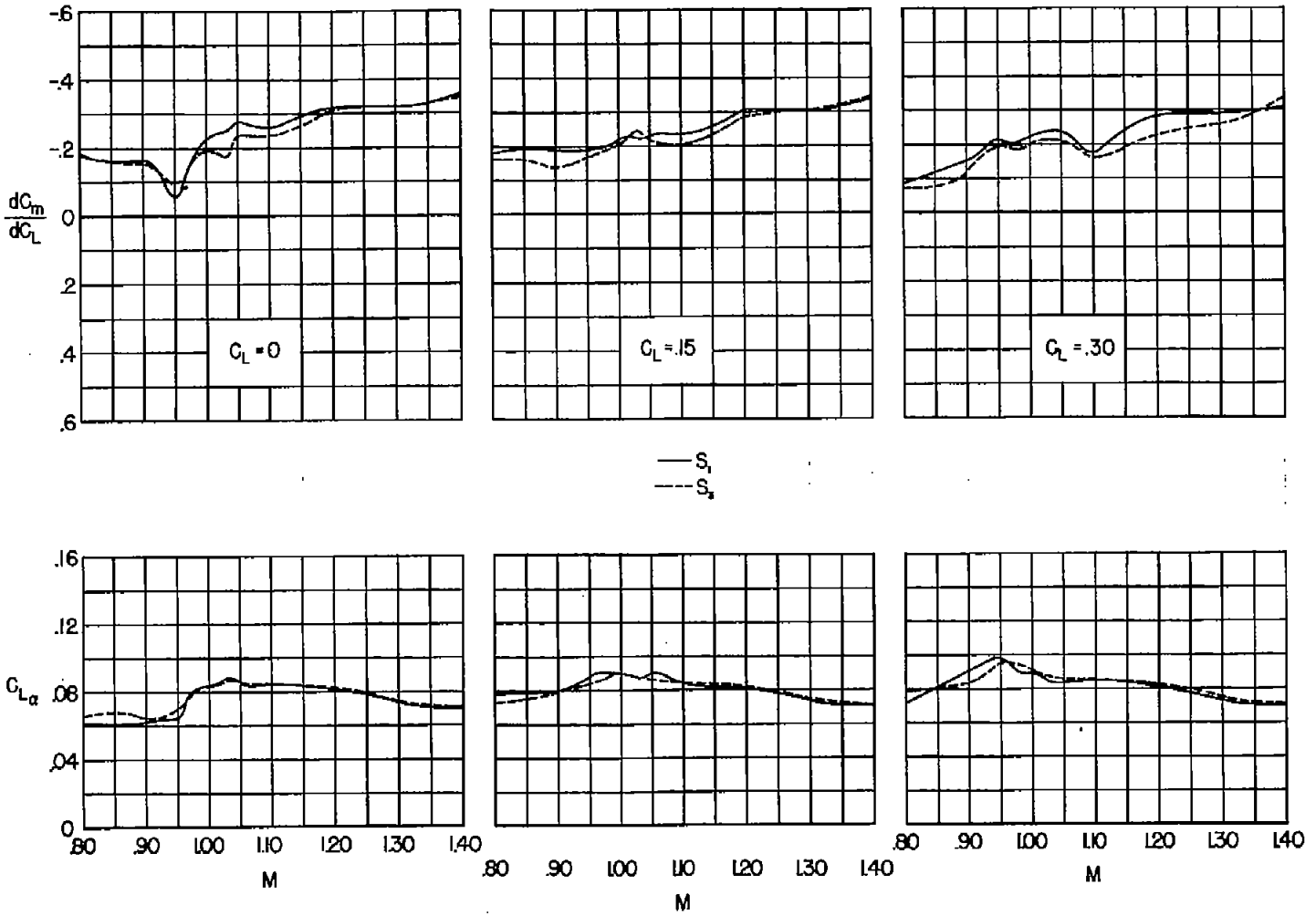

(b) $\frac{dC_m}{dC_L}$ and C_{L_α}

Figure 15. - Concluded.

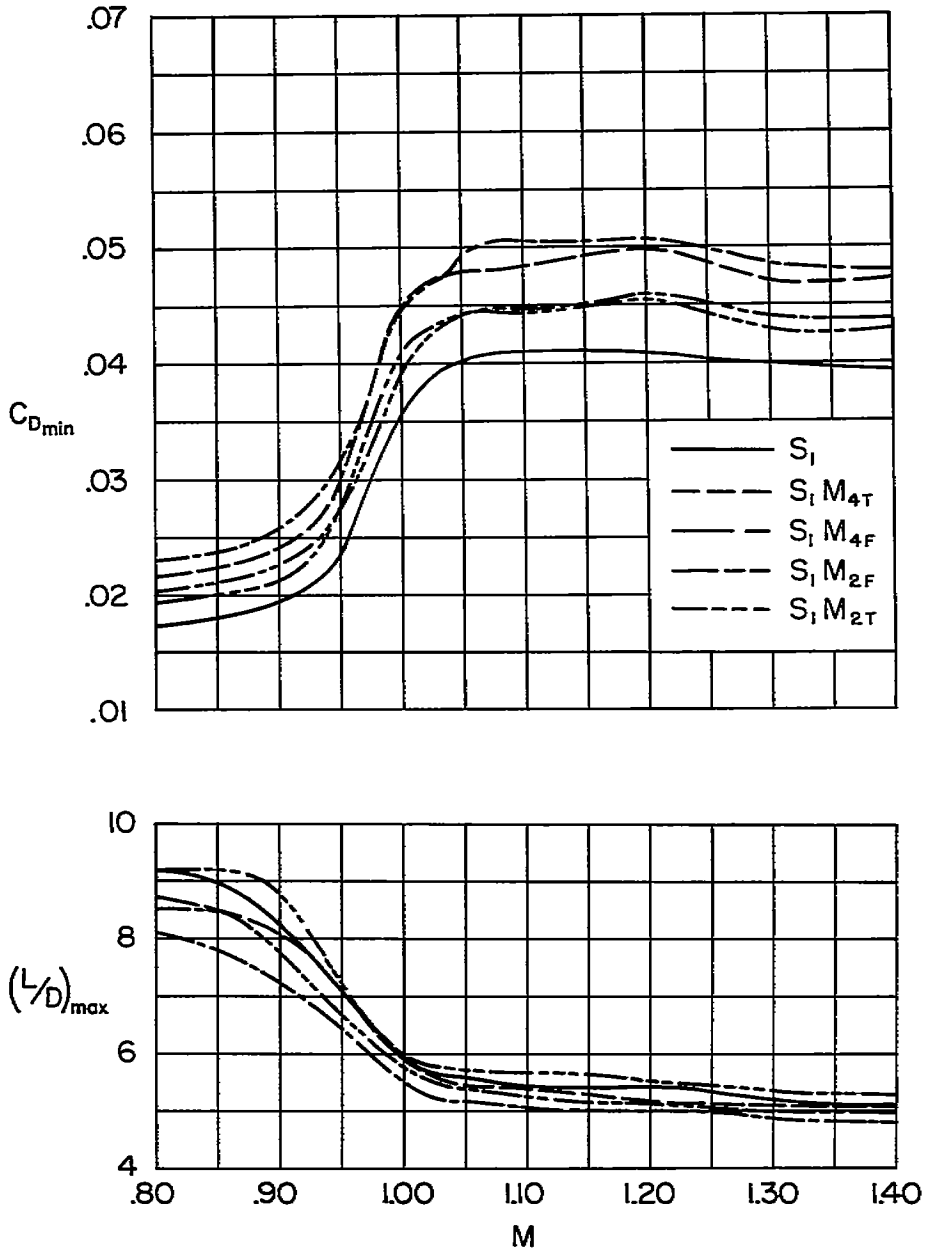

(a) $C_{D_{min}}$ and $(L/D)_{max}$

Figure 16. – The variation with Mach number of longitudinal aerodynamic characteristics of the model with and without conventional missile M installations.

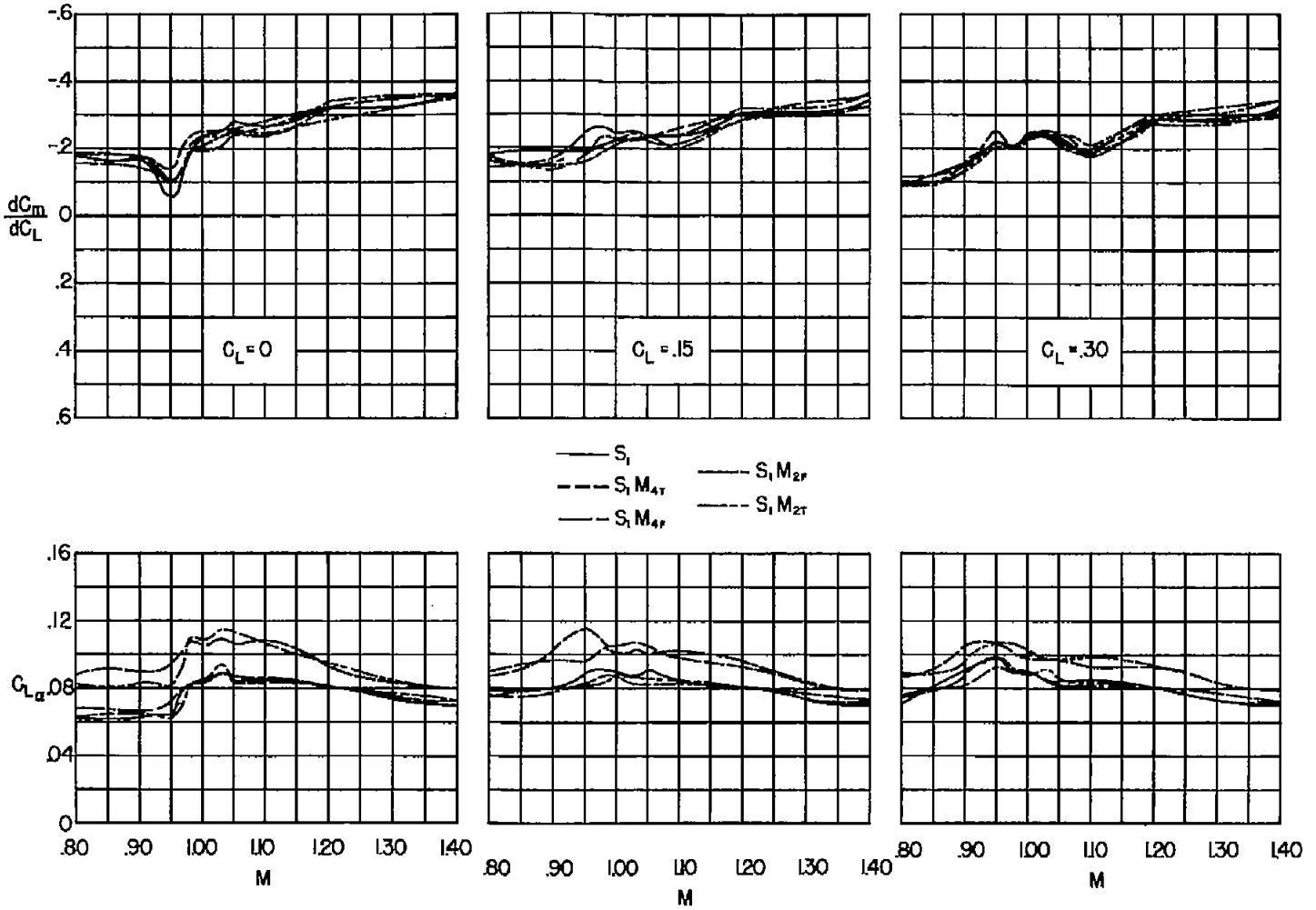

(b) $\frac{dC_m}{dC_L}$ and C_{L_α}

Figure 16.- Concluded.

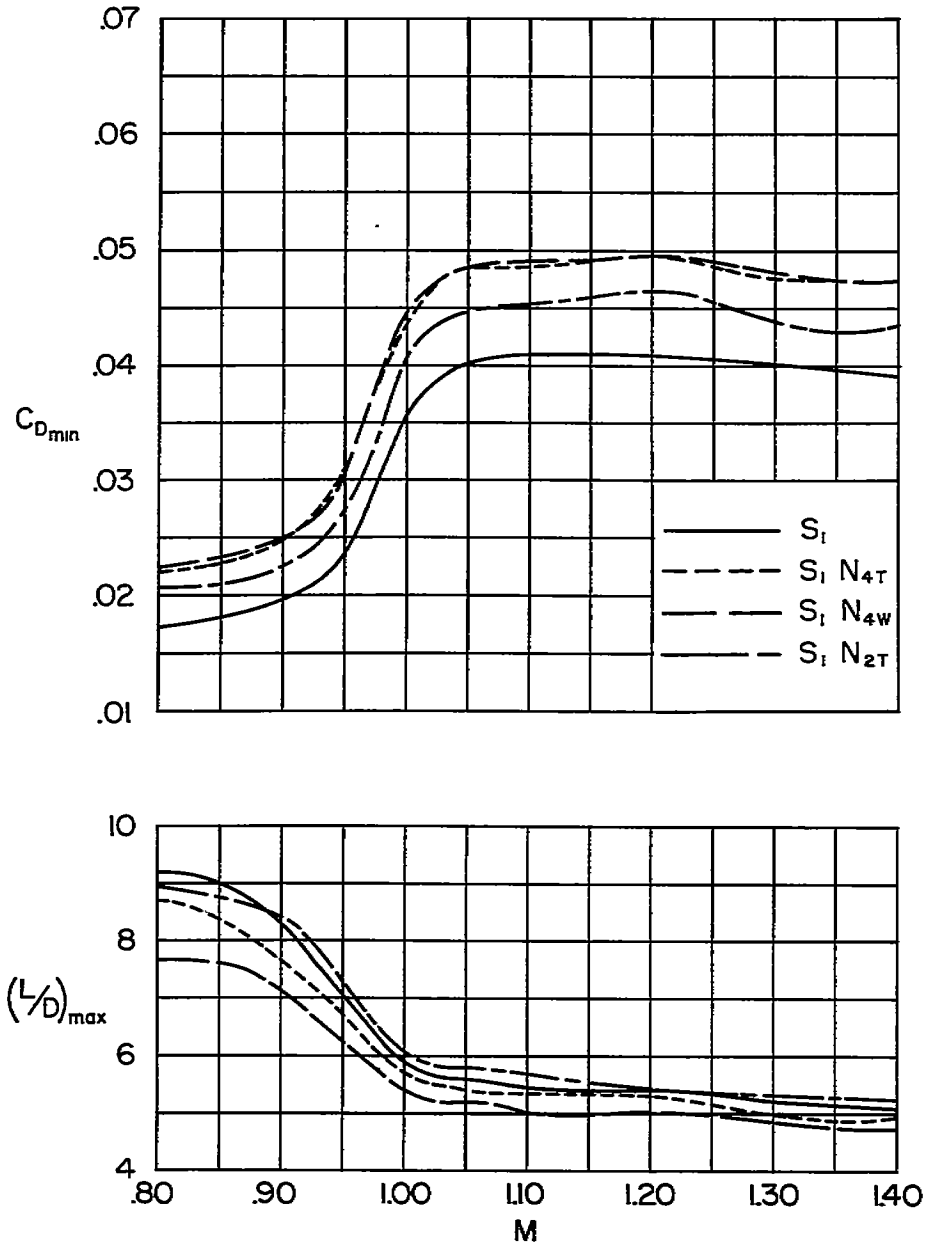

(a) $C_{D_{min}}$ and $(L/D)_{max}$

Figure 17.- The variation with Mach number of longitudinal aerodynamic characteristics of the model with and without N missiles.

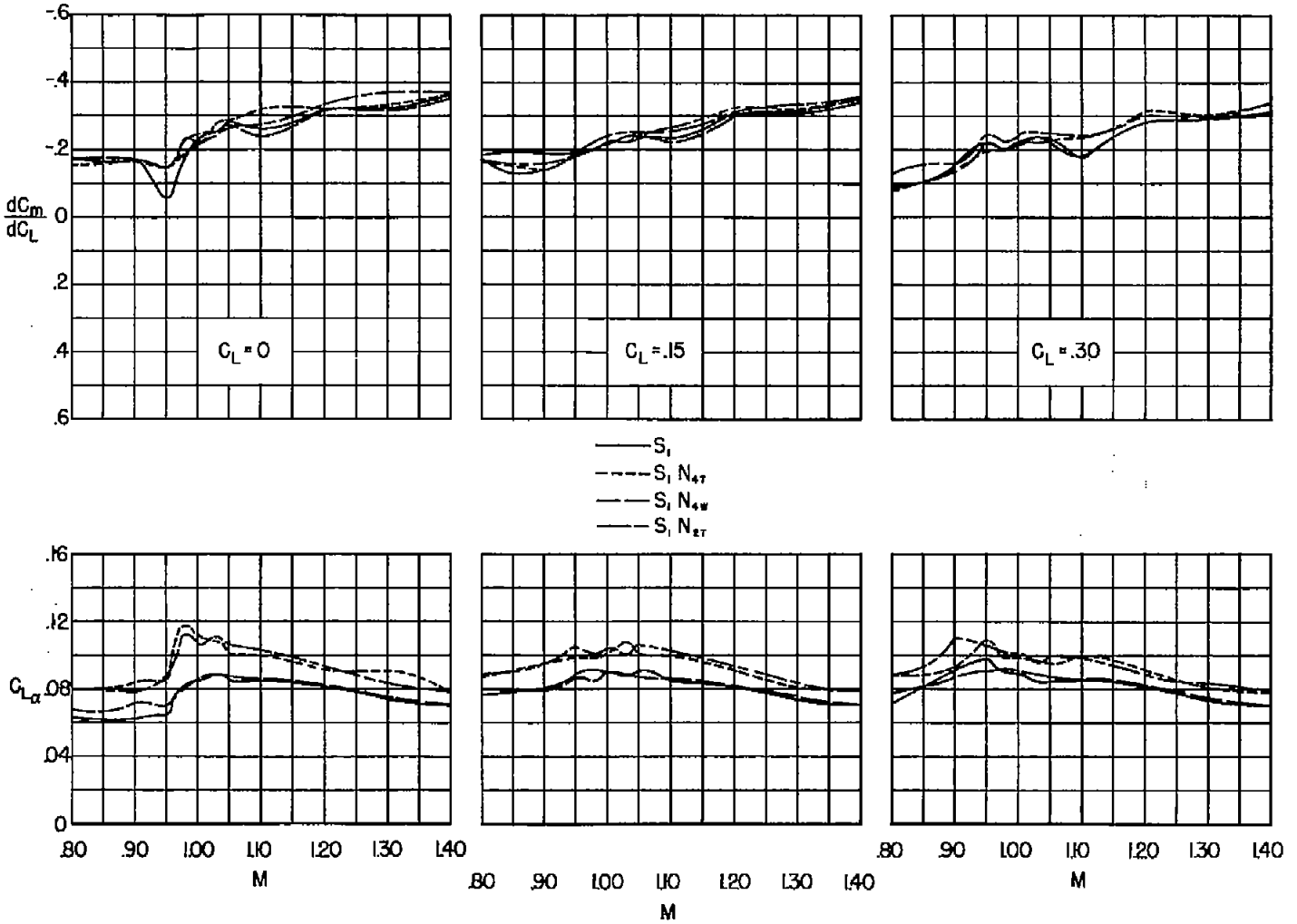

(b) $\frac{dC_m}{dC_L}$ and C_{L_α}

Figure 17. – Concluded.

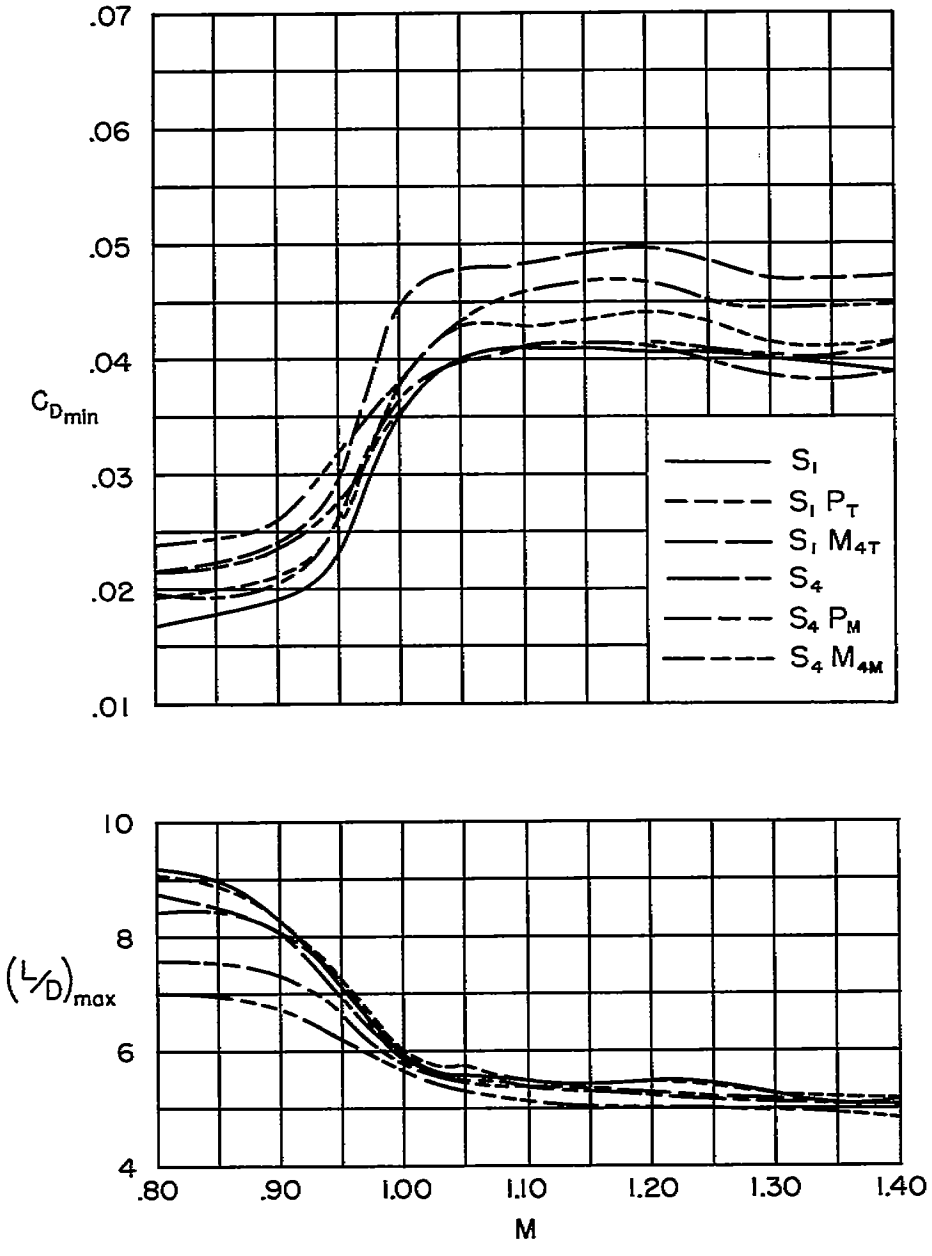

(a) $C_{D_{min}}$ and $(L/D)_{max}$

Figure 18.– The variation with Mach number of longitudinal aerodynamic characteristics of the configurations designed according to the moment-of-area rule, the comparable conventional missile M configurations, and the basic model.

[redacted]

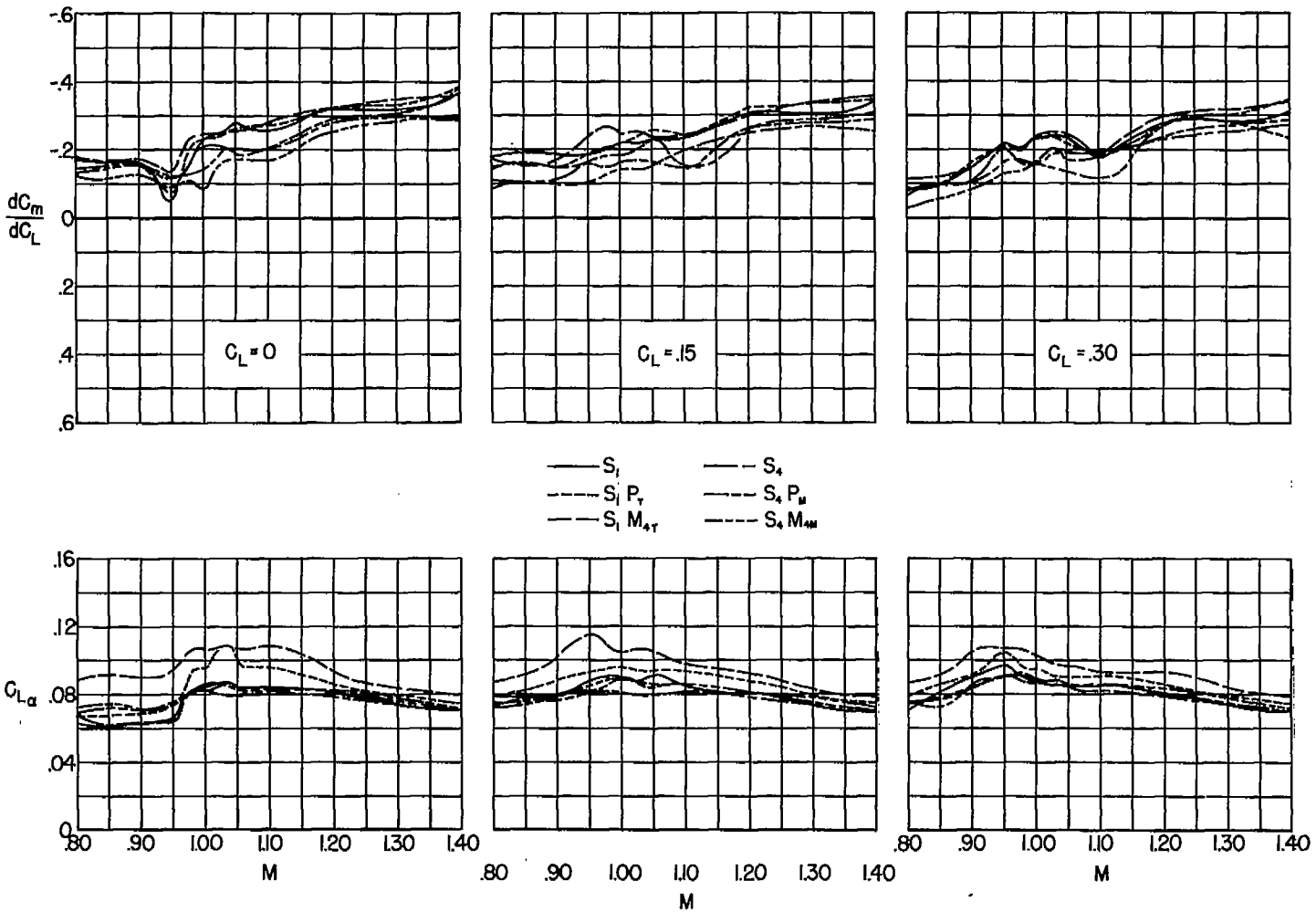

(b) $\frac{dC_m}{dC_L}$ and C_{L_α}

Figure 18.- Concluded.

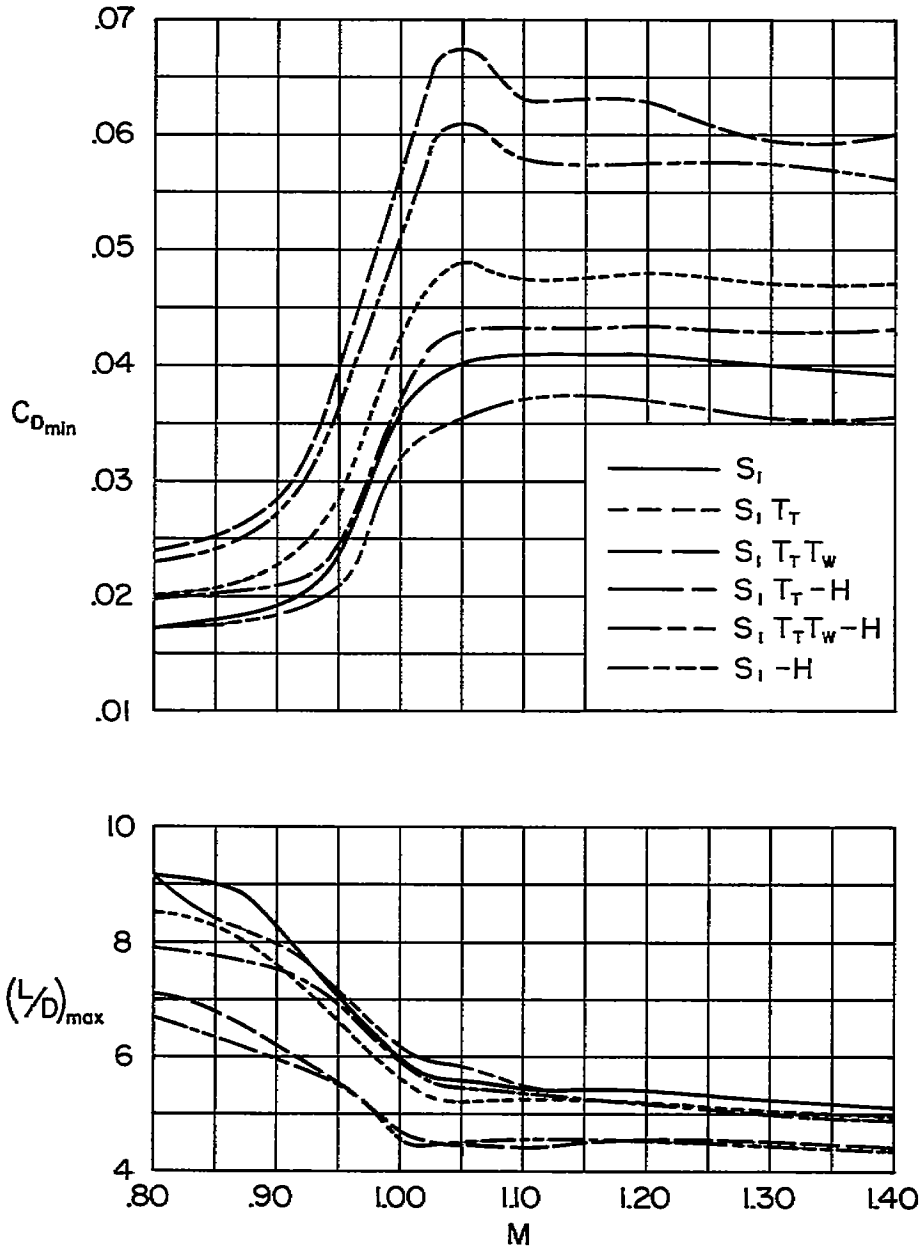

(a) $C_{D_{min}}$ and $(L/D)_{max}$

Figure 19.– The variation with Mach number of longitudinal aerodynamic characteristics of the model with and without external storage tank installations.

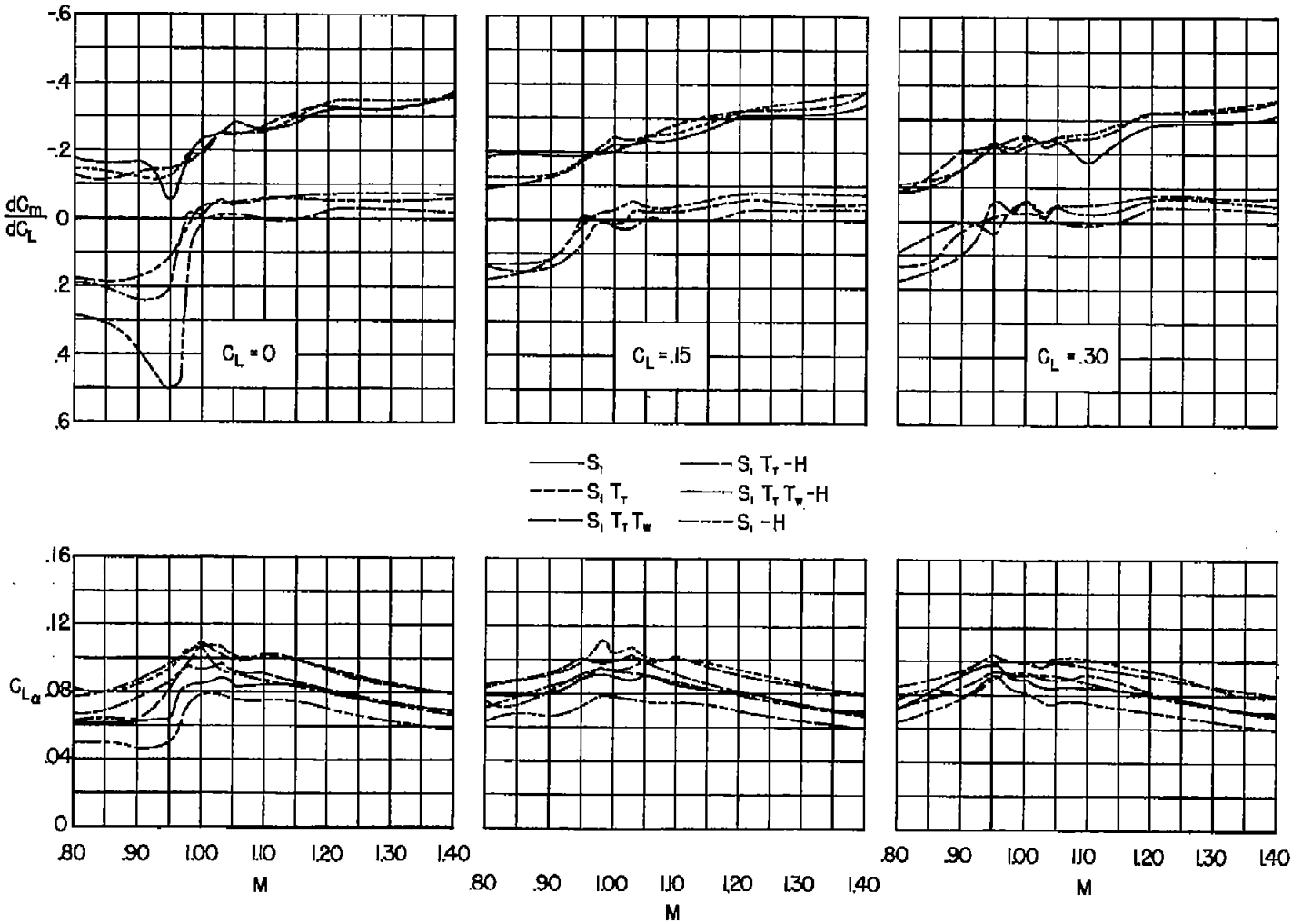

(b) $\frac{dC_m}{dC_L}$ and C_{L_α}

Figure 19.- Concluded.

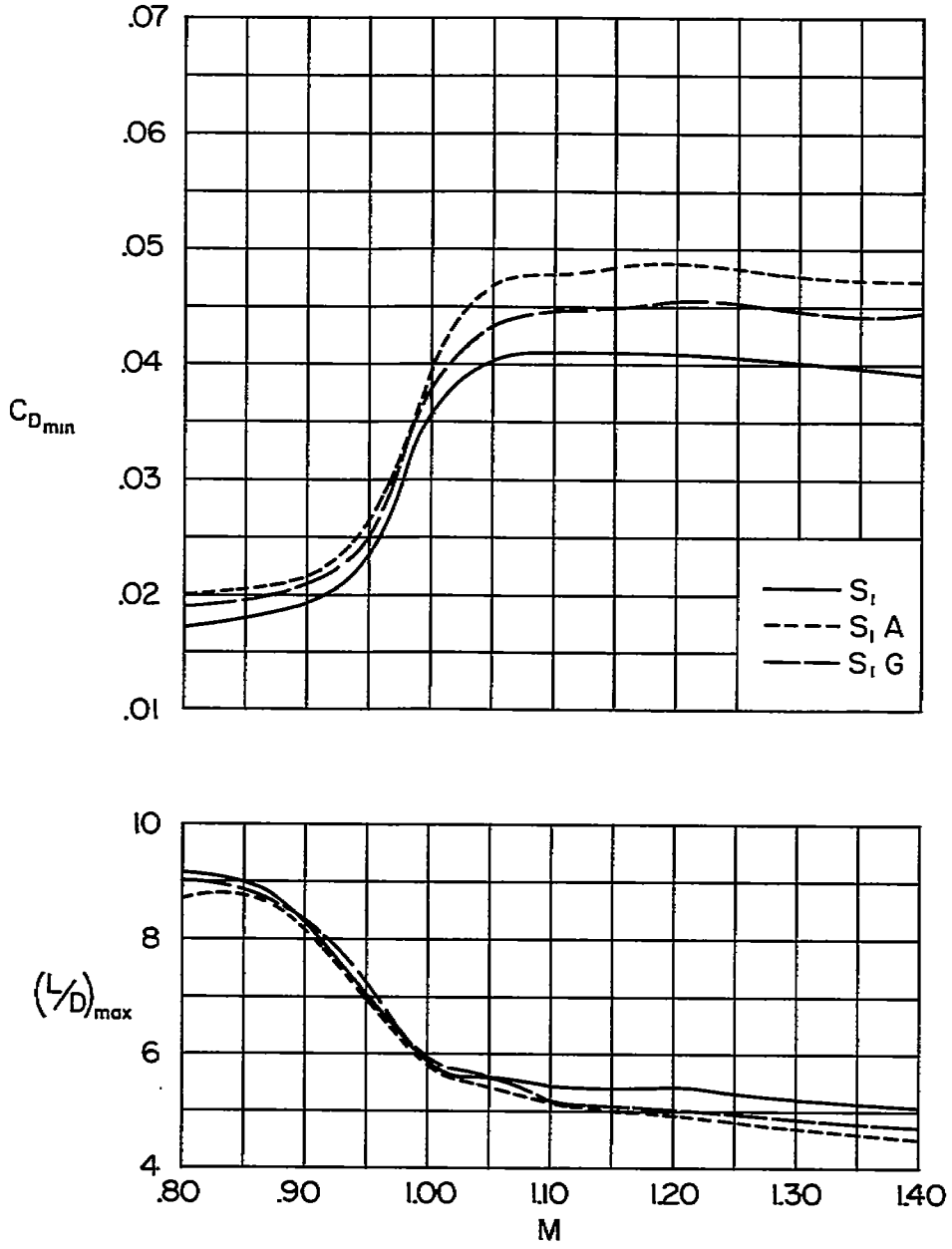

(a) $C_{D_{min}}$ and $(L/D)_{max}$

Figure 20.- The variation with Mach number of longitudinal aerodynamic characteristics of the model with and without the bomb and gun-housing installations.

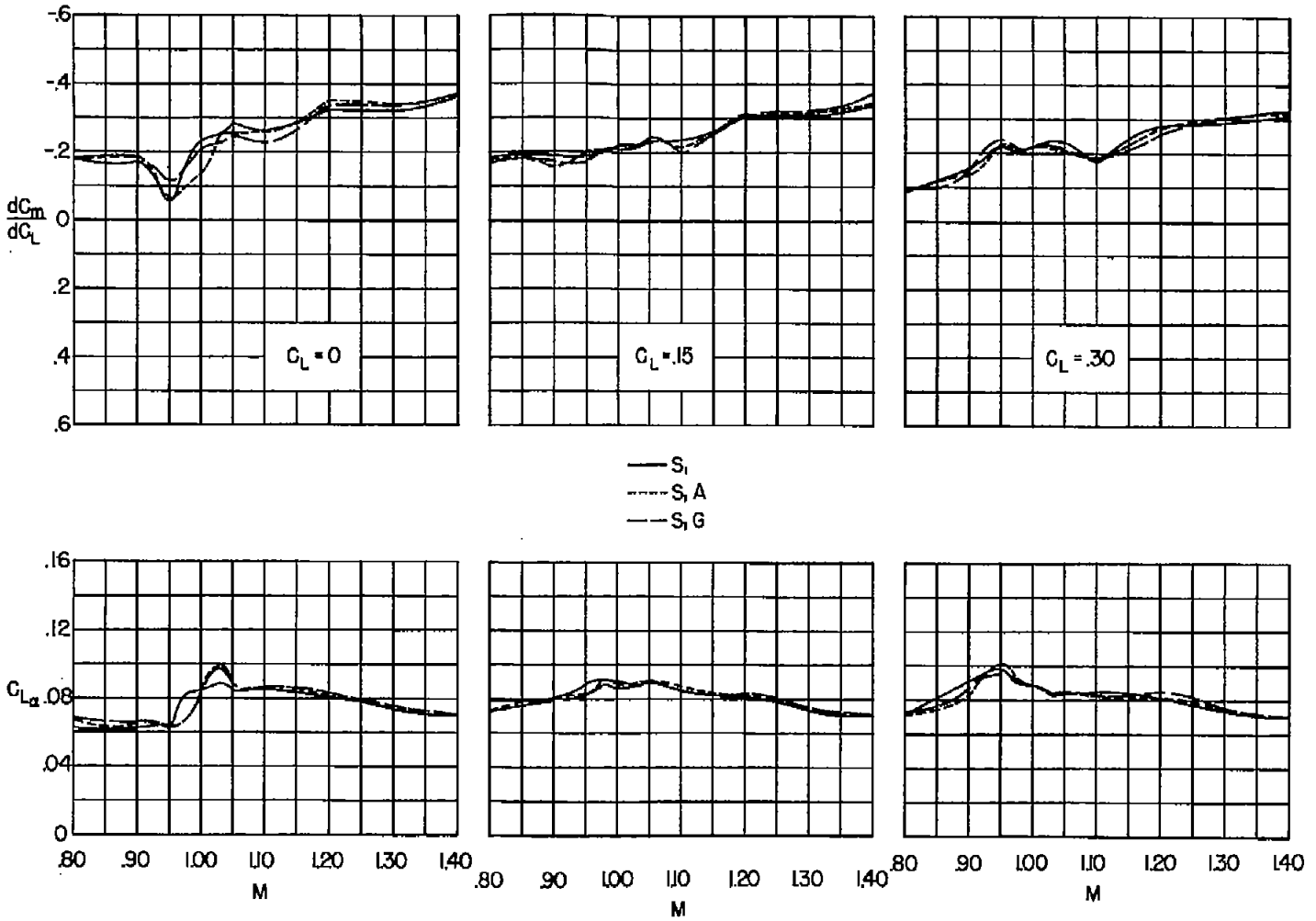

(b) $\frac{dC_m}{dC_L}$ and C_{L_α}

Figure 20.- Concluded.

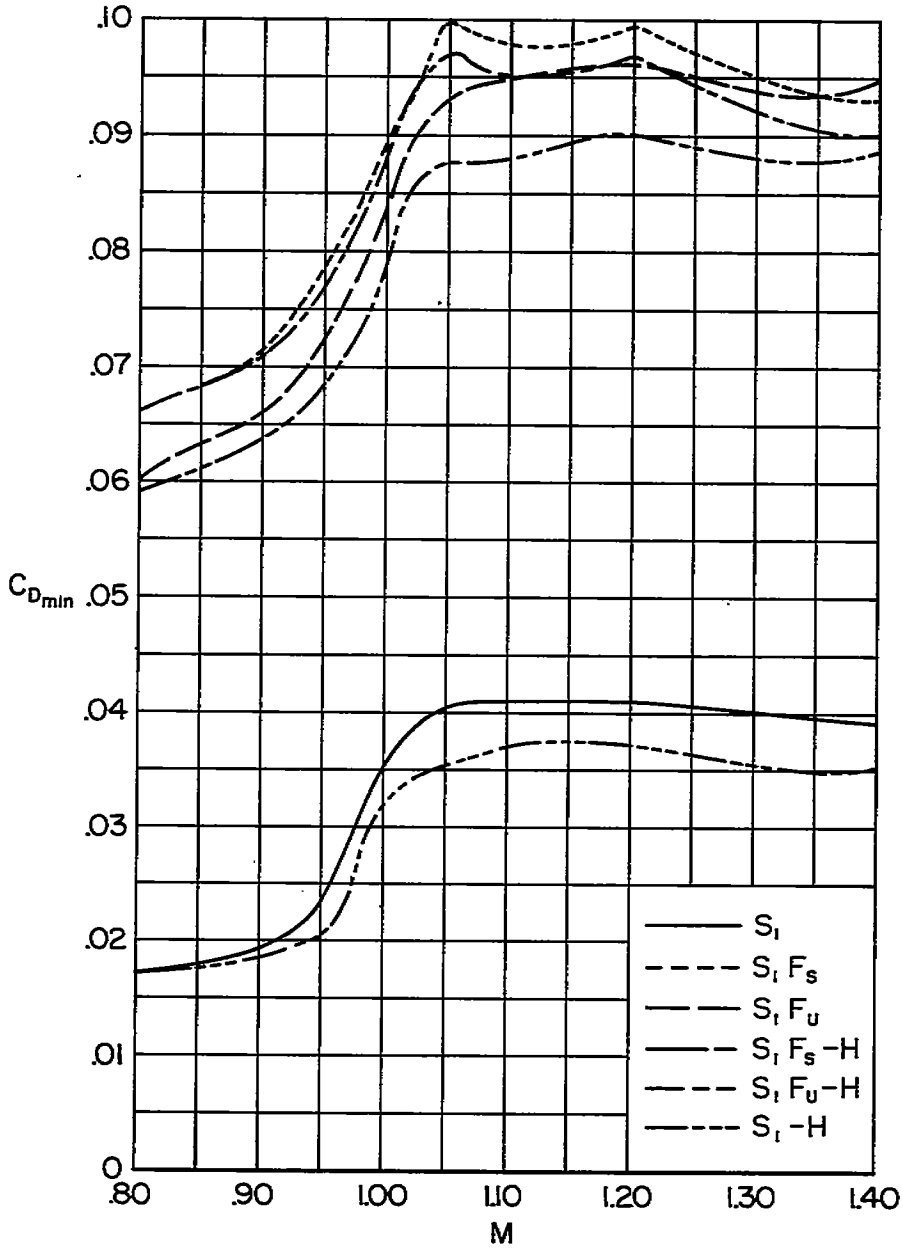

(a) $C_{D_{min}}$

Figure 21.- The variation with Mach number of longitudinal aerodynamic characteristics of the model with and without dive-flap installations.

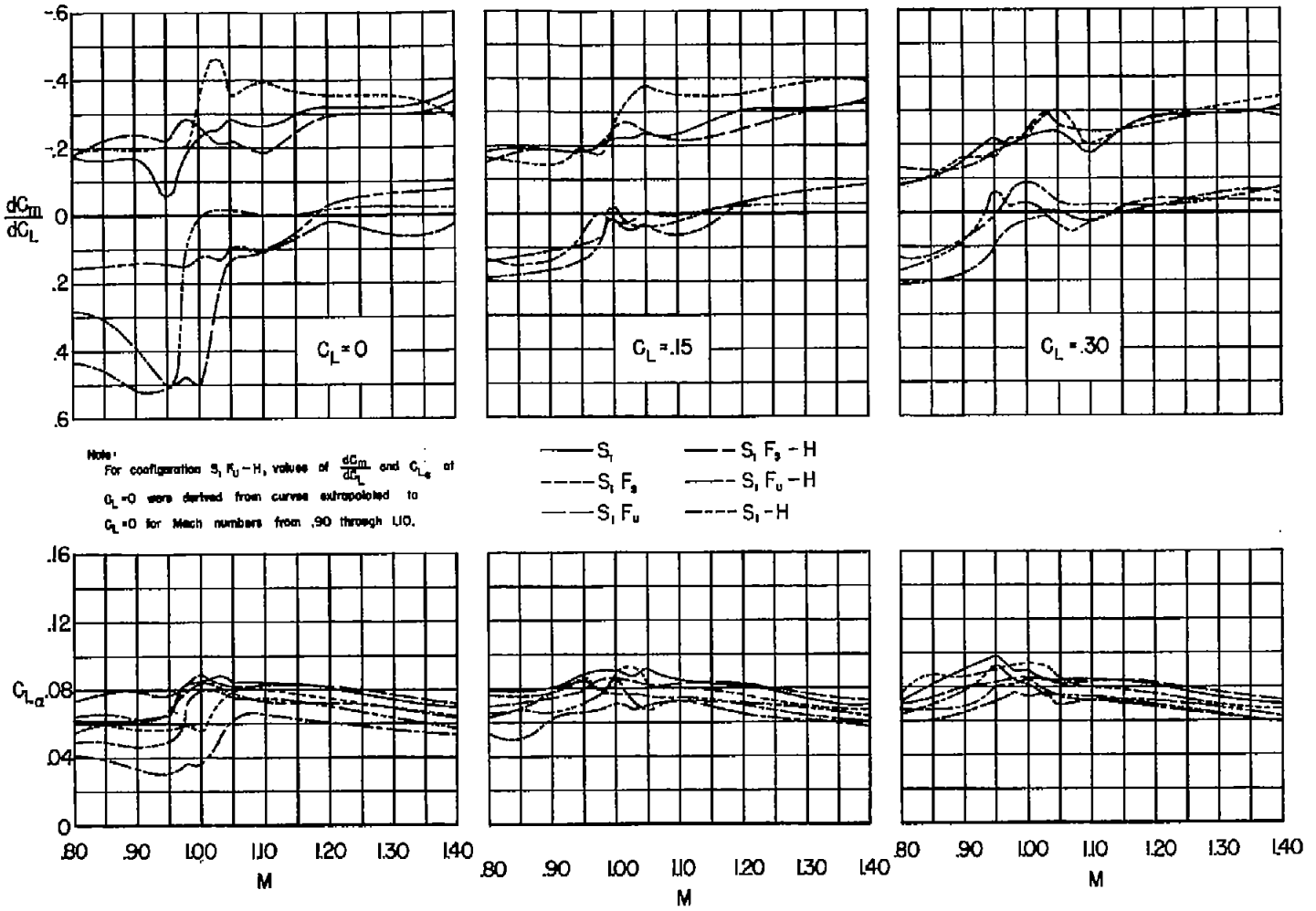

(b) $\frac{dC_m}{dC_L}$ and C_{L_α}

Figure 21.- Concluded.

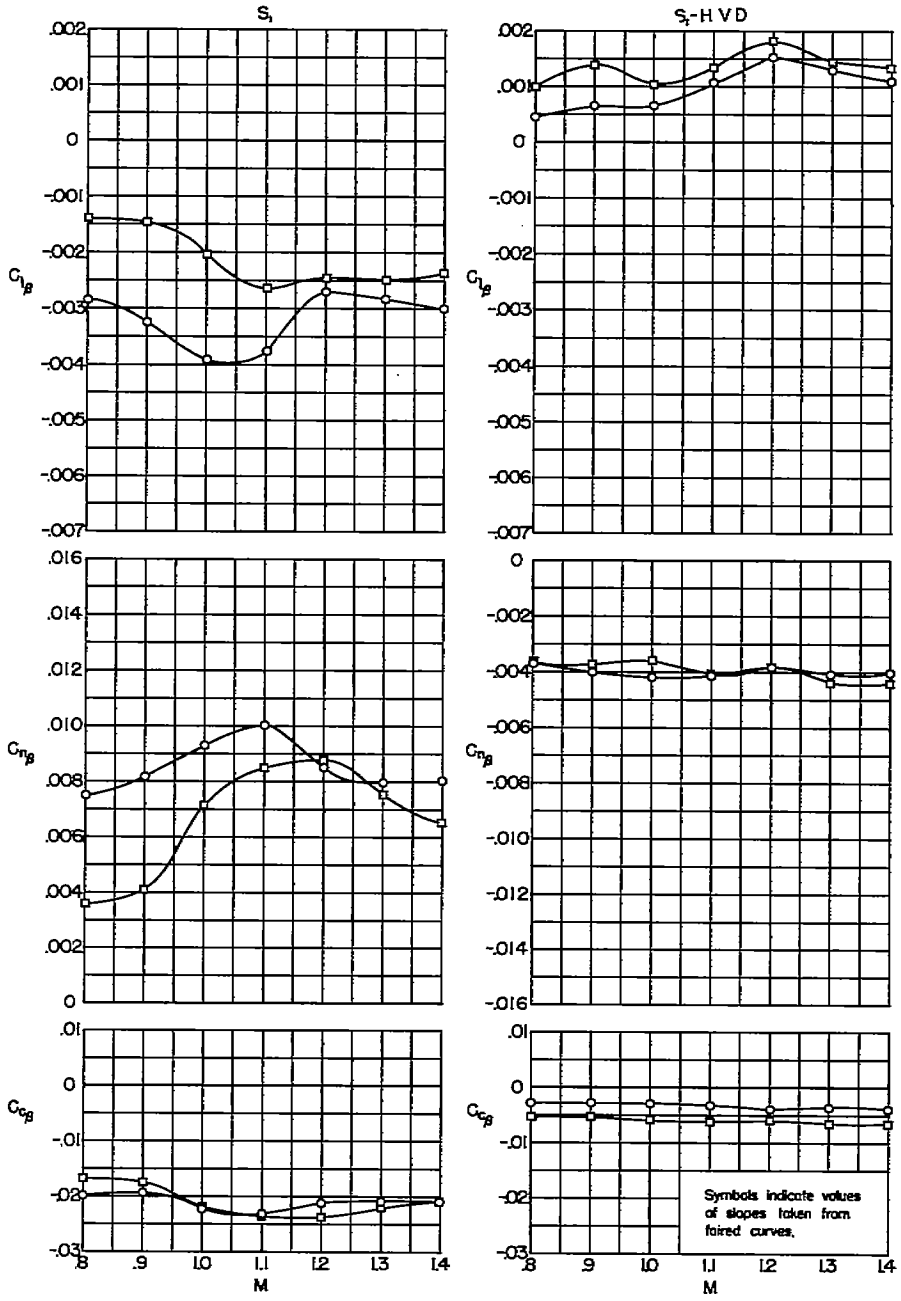

(a) α = 3°

Figure 22.- The variation with Mach number of lateral-directional aerodynamic characteristics of the basic model with and without the empennage.

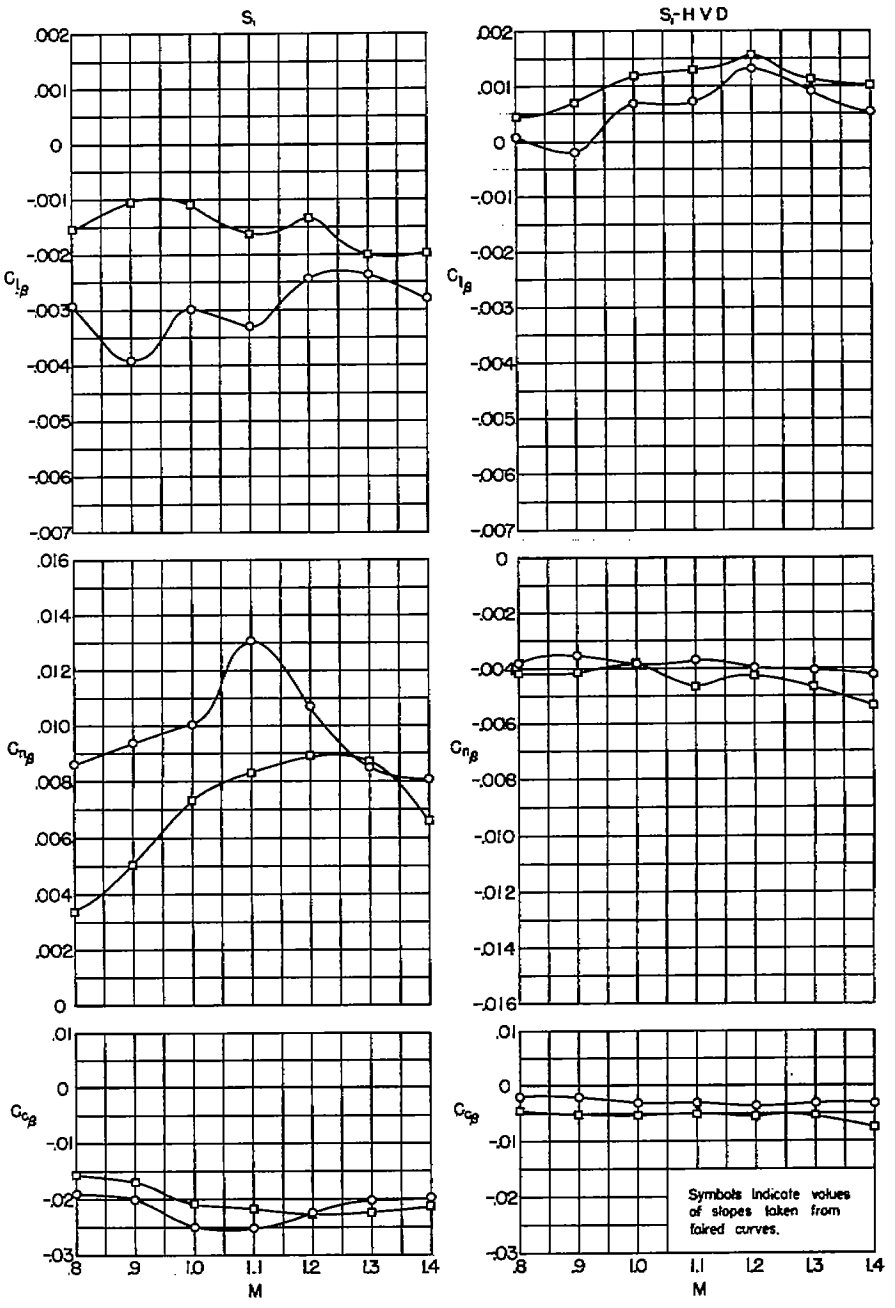

○ $\beta = 0°$
□ $\beta = 7\frac{1}{2}°$

(b) $\alpha = 7°$

Figure 22.- Continued.

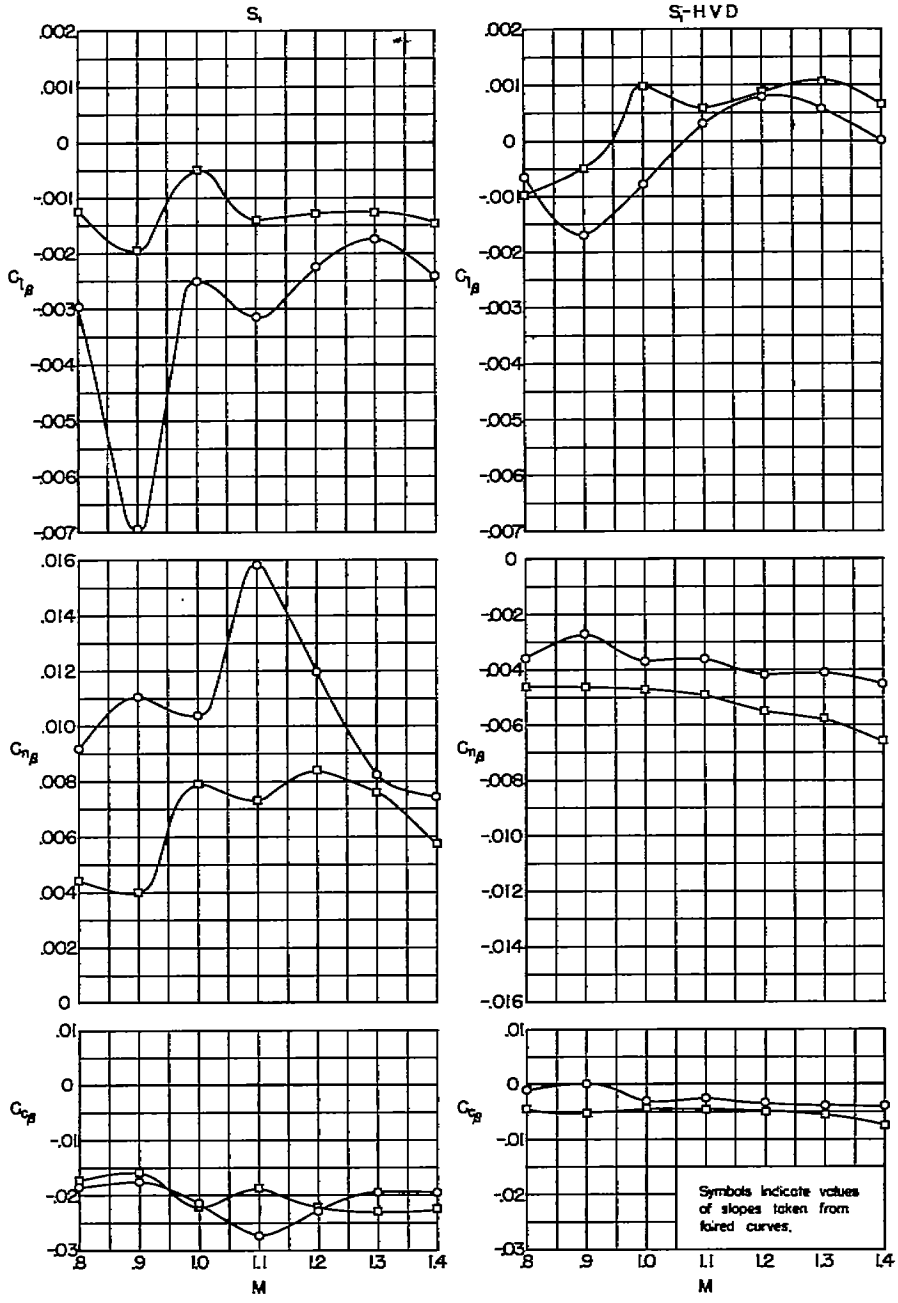

○ $\beta = 0^\circ$
□ $\beta = 7\frac{1}{2}^\circ$

(c) $\alpha = 11^\circ$

Figure 22.- Concluded.

[redacted]