NACA RM E55K07

TECH LIBRARY KAFB, NM
0144065

NACA

RESEARCH MEMORANDUM

6944

PRELIMINARY FLIGHT SURVEY OF AERODYNAMIC NOISE ON AN AIRPLANE WING

By Harold R. Mull and Joseph S. Algranti

Lewis Flight Propulsion Laboratory
Cleveland, Ohio

NATIONAL ADVISORY COMMITTEE
FOR AERONAUTICS
WASHINGTON
March 2, 1956

TECH LIBRARY KAFB, NM
0144065

NATIONAL ADVISORY COMMITTEE FOR AERONAUTICS

RESEARCH MEMORANDUM

PRELIMINARY FLIGHT SURVEY OF AERODYNAMIC NOISE ON AN AIRPLANE WING

By Harold R. Mull and Joseph S. Algranti

3975

CQ-1

SUMMARY

A brief series of airplane-wing aerodynamic-noise and boundary-layer-profile measurements were made in flight as part of an extended investigation of boundary-layer noise. The velocity profiles of the boundary layer at the measuring station were found to be similar to the typical experimental turbulent-boundary-layer velocity profiles. The ratio of the root-mean-square sound pressure on the surface to the free-stream dynamic pressure was found to decrease linearly with increasing Mach number up to a Mach number 0.55 and remain nearly constant thereafter to near the limiting Mach number of the airplane. A sharp increase in the sound pressure near the limiting Mach number of the aircraft was observed and probably resulted from local-shock formations on the wing.

INTRODUCTION

Most of the research on jet-aircraft noise has been centered on the jet, itself, as the primary source of noise. In flight, however, some aircraft surfaces may be subjected to more noise from the boundary layer flowing over the surface than from the jet. This is particularly true at high subsonic speeds, because the relative jet velocity, and hence the jet noise, decreases with forward speed, whereas the boundary-layer noise would be expected to increase.

This report presents the results of a brief series of airplane-wing boundary-layer-noise measurements made in flight as part of an extended investigation of boundary-layer noise. The spectra were obtained in octave bands, and the influence of altitude and airspeed explored.

APPARATUS AND PROCEDURE

The aircraft (fig. 1) used in this investigation was a small twin-engined fighter. The measurements were made on the right wing at the dive-brake well, that is, about the 2/3-chord point.

The sound measurement system consisted of a miniature condenser microphone with its associated preamplifier and power-supply, a sound-level meter, and an octave band analyzer. The microphone (fig. 1) was mounted behind a panel which replaced the cover over the dive-brake well. A sintered stainless-steel plug covered the opening in the panel in order to minimize the effect of wind noise on the microphone. The entire sound-measuring system, including the stainless-steel plug, was acoustically calibrated in the free field over a range of frequencies from 20 to 10,000 cycles per second. The data summarized have been corrected for frequency response, cable attenuation, and altitude (pressure) effect on the microphone diaphragm loading. The boundary-layer rake was mounted adjacent to the microphone opening. The tube pressures were measured by differential pickups referenced to a flush static tap and were recorded on film. 3975

Data were taken at several flight speeds and altitudes. After flight conditions were stabilized, a film record of the boundary layer was made at the same time as the sound pressure levels were being read by the pilot. The altitudes used were pressure altitudes based on NACA standard atmosphere.

RESULTS AND DISCUSSION

The boundary-layer data are summarized in figure 2, in which the velocity ratio U/U_0 is plotted as a function of the ratio of tube position to the boundary-layer thickness y/δ. The term U is the air velocity at the point of measurement, U_0 is the air velocity outside the boundary layer, y is the tube position, and δ is the boundary-layer thickness. The shape of the curve is typical of the usual subsonic turbulent-boundary-layer velocity profile. For the range of conditions investigated, the boundary-layer thickness δ (based on 99 percent U/U_0) was approximately equal to 1.35 inches.

Five octave-band spectra for the turbulent-boundary-layer noise are shown in figure 3. In figure 3(a) the effect of altitude is shown for a constant airspeed. In figure 3(b) the spectra are for similar altitudes but at much lower airspeeds.

The curves were repeated very well when similar conditions were rerun. However, the limited amount of data taken did not permit any correlation of spectrum shape with the test conditions. Most of the noise is apparently in the low and middle bands; the curves fall off rapidly in the top three bands.

The question of the effect of engine noise on the data was resolved by throttling back the engines abruptly. Under these conditions, the

airplane maintained its airspeed briefly while the engines were decelerating. The sound pressure level did not fall until the airplane speed slackened, indicating that the engines were not the primary source of noise at the microphone.

The ratio of the root-mean-square sound pressure to the dynamic pressure is plotted as a function of Mach number in figure 4. The ratio decreases linearly with Mach number to a Mach number of approximately 0.55 and remains constant at Mach numbers greater than 0.55. The scatter shown is less than 1 decibel, which is the probable measurement error. The range of Reynolds numbers based on the distance from the leading edge to the measuring station is 8×10^6 to 20×10^6. The angle of attack was calculated from the conditions corresponding to the data points plotted in figure 4. These calculations showed the local velocity to differ from the free-stream velocity by no more than 10 percent; and hence angle of attack should not have a large effect on the results shown in figure 4.

3975

One additional point not plotted in figure 4 was very much higher in over-all sound pressure (129 db). The location of this point at a Mach number of approximately 0.8, the limiting Mach number of the airplane, undoubtedly indicates the presence of shock waves near the point of measurements. The spectrum for this point is plotted in figure 3(a).

Lewis Flight Propulsion Laboratory
National Advisory Committee for Aeronautics
Cleveland, Ohio, November 8, 1955

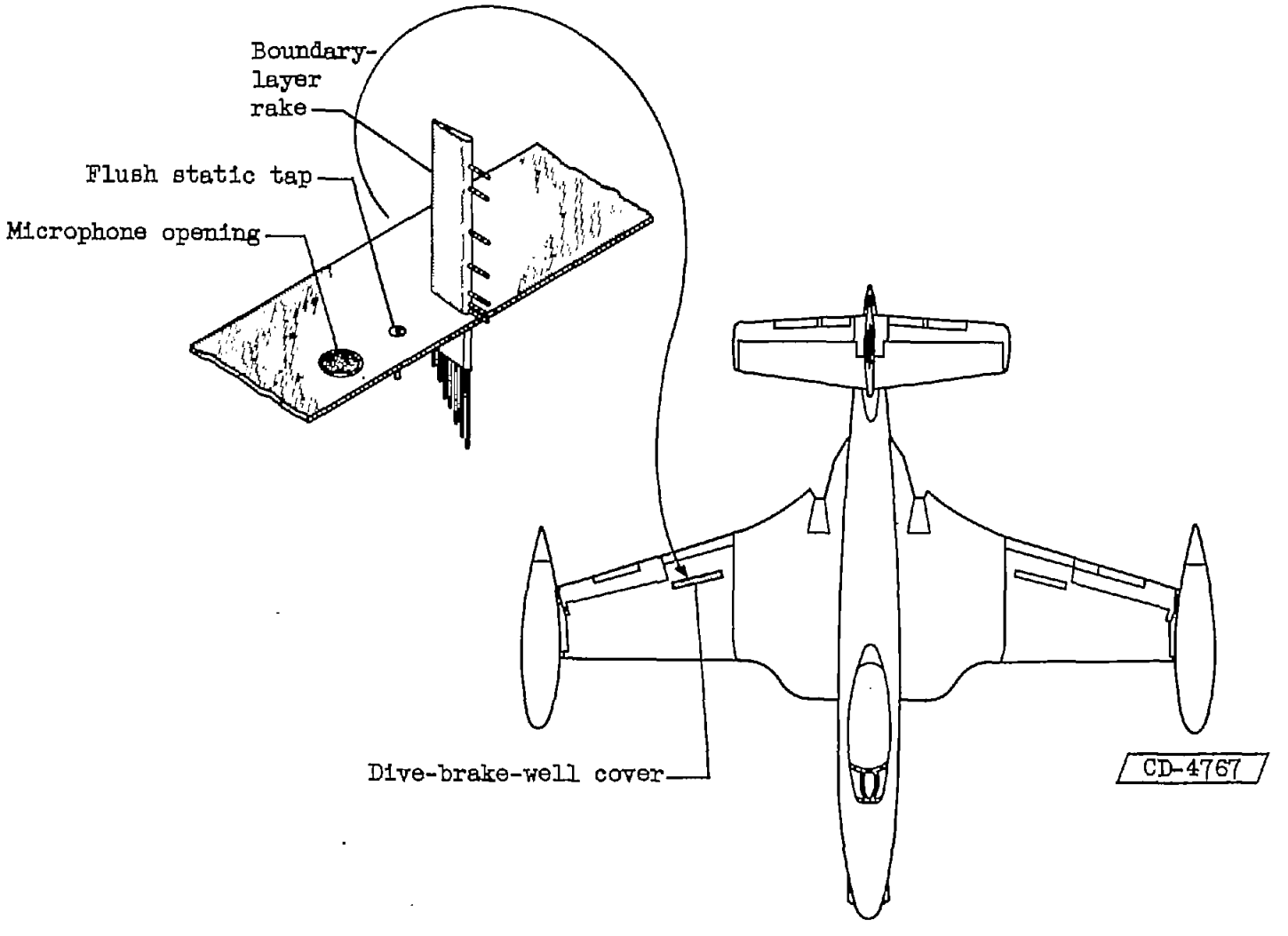

Figure 1. - Diagram of boundary-layer rake and microphone mounting.

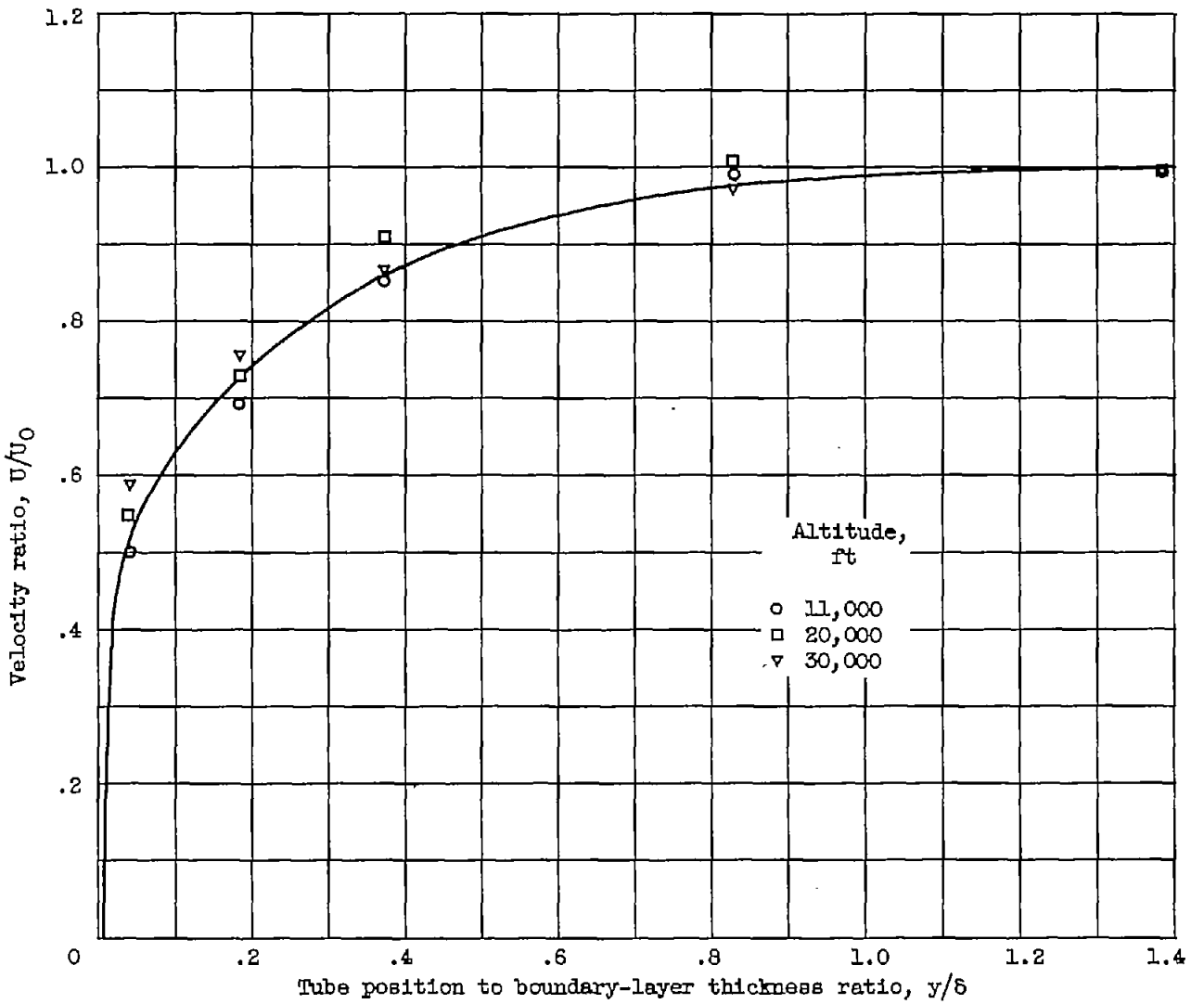

Figure 2. - Typical boundary-layer profiles at measuring station.

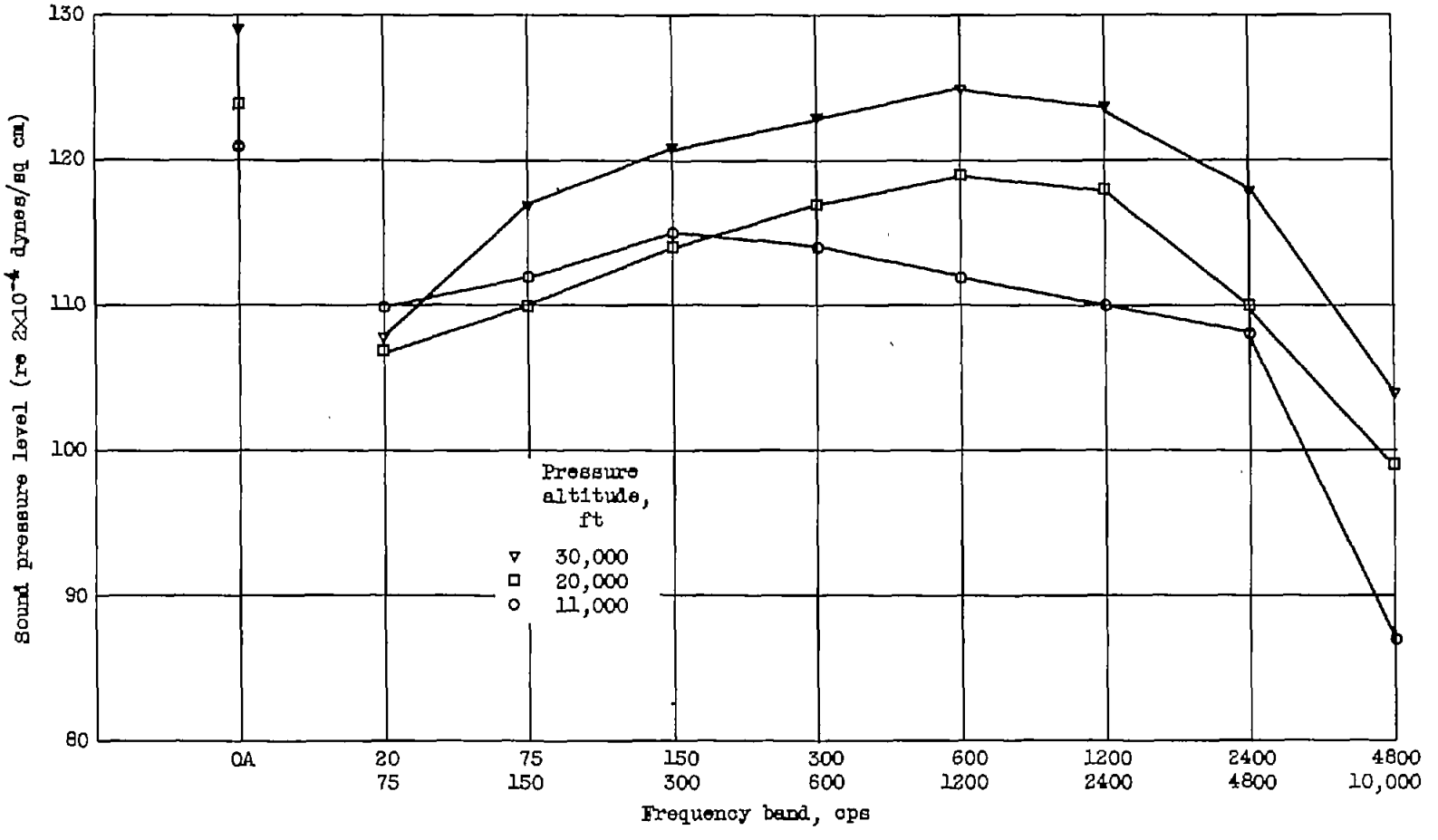

(a) Constant true airspeed, 455 knots.

Figure 3. - Sound spectra on wing surface at various altitudes. OA indicates over-all level.

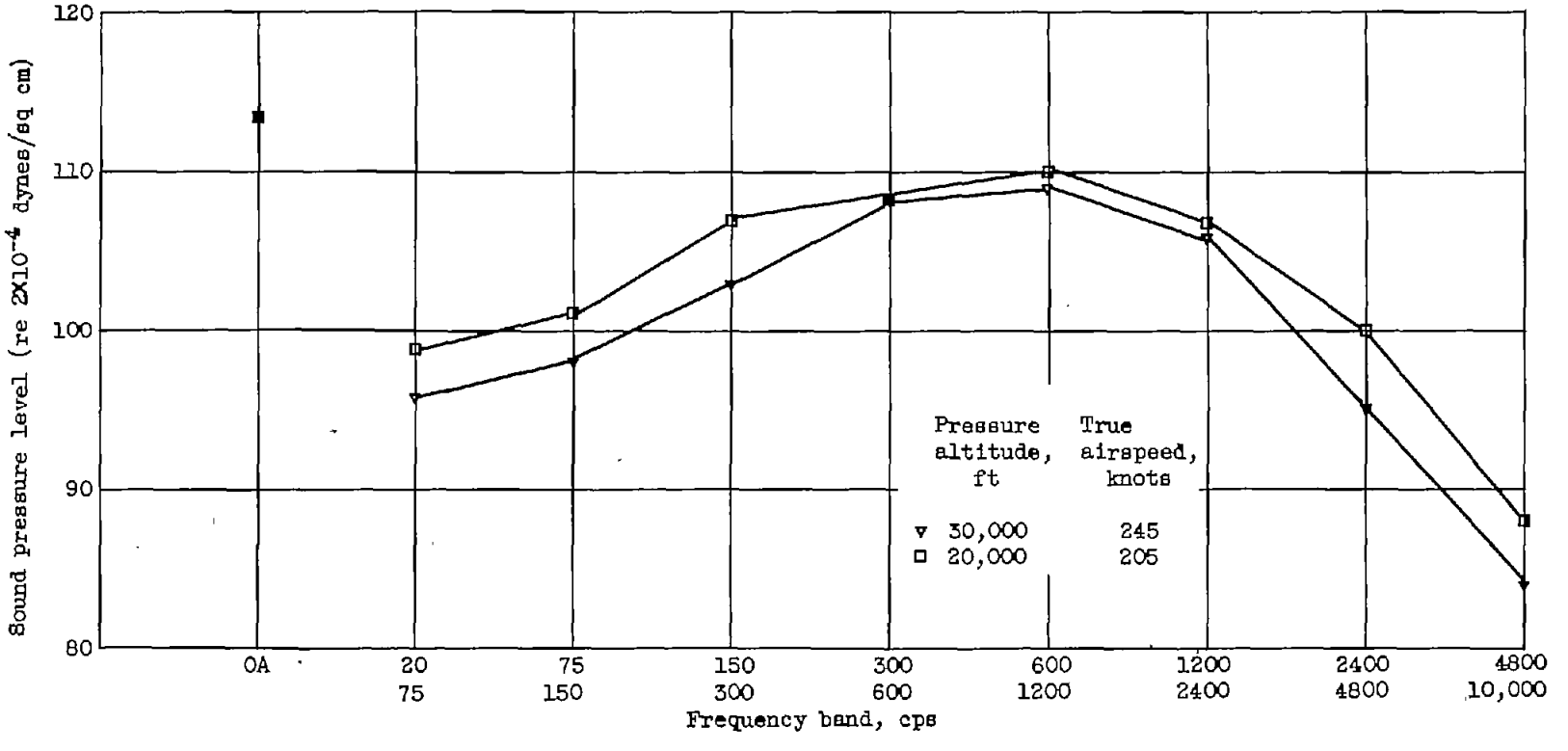

(b) Various airspeeds.

Figure 3. - Concluded. Sound spectra on wing surface at various altitudes. OA indicates over-all level.

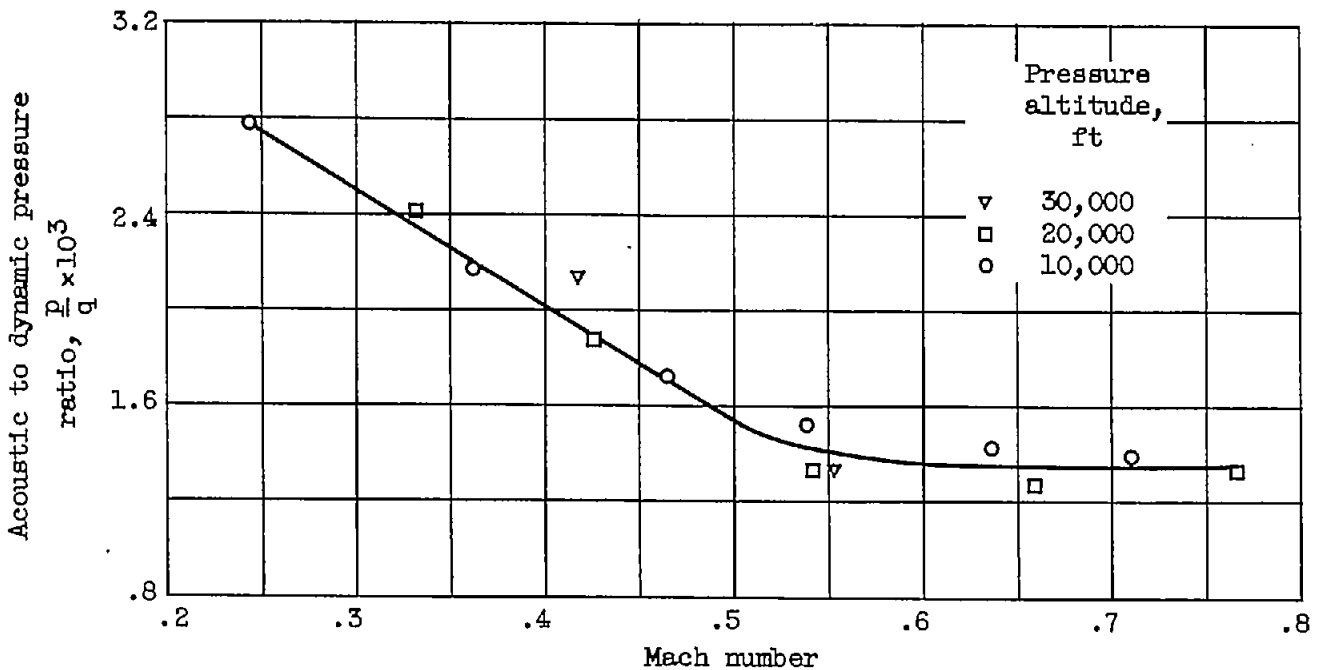

Figure 4. - The effect of Mach number on pressure ratio.

NACA - Langley Field, Va.