322

[redacted]

Copy
RM E56D27a

NACA RM E56D27a

Rept # 5719
30 July 57

TECH LIBRARY KAFB, NM
0144085

NACA

RESEARCH MEMORANDUM

5359

INTERNAL PERFORMANCE CHARACTERISTICS OF SHORT CONVERGENT-DIVERGENT EXHAUST NOZZLES DESIGNED BY THE METHOD OF CHARACTERISTICS

By H. George Krull and William T. Beale

Lewis Flight Propulsion Laboratory
Cleveland, Ohio

Classification cancelled (or changed to UNCLASSIFIED)
By authority of NASA Tech Pub Announcement #126
(OFFICER AUTHORIZED TO CHANGE)
By ..... 28 Aug 58
NAME AND
NAME OF OFFICER MAKING CHANGE
DATE

[redacted]

NATIONAL ADVISORY COMMITTEE
FOR AERONAUTICS
WASHINGTON
July 24, 1956

[redacted]

TECH LIBRARY KAFB, NM

0144085

NATIONAL ADVISORY COMMITTEE FOR AERONAUTICS

RESEARCH MEMORANDUM

INTERNAL PERFORMANCE CHARACTERISTICS OF SHORT CONVERGENT-DIVERGENT EXHAUST NOZZLES DESIGNED BY THE METHOD OF CHARACTERISTICS

By H. George Krull and William T. Beale

4055

GT-1

SUMMARY

An evaluation of the internal performance characteristics of short nozzles designed by the method of characteristics was obtained over a range of nozzle pressure ratios from 1.5 to 22.

The basic nozzle used in this investigation was the shortest nozzle that could be designed by the method of characteristics to discharge the flow axially at a nozzle pressure ratio of 15. The peak thrust coefficient of this nozzle was 0.976, which occurred at the design pressure ratio of 15. Portions of the divergent section of the basic nozzle were cut off, reducing the divergent-section length to one-third of the design value, with no effect on the peak thrust coefficient. The peak thrust coefficient did, however, occur at pressure ratios lower than design because of a reduction in the expansion ratio. At the design pressure ratio of 15, a 70 percent reduction in the divergent-section length caused a drop of approximately 1 percent in the thrust coefficient below that of the basic nozzle. The nozzle contour based on a characteristics solution gave higher thrust coefficients than a conical nozzle of the same length.

Abrupt inlet sections permitted reduction in nozzle length without reducing the thrust coefficient. The only effect an abrupt inlet had on the nozzle performance was to reduce the flow coefficient.

INTRODUCTION

In addition to having a high thrust coefficient, the exhaust nozzle of a jet propulsion system should always be as short as possible to minimize weight and cooling surface. Several methods for reducing the divergent-section length have been investigated previously. These methods included increased divergence angle of a conical nozzle (ref. 1),

underexpansion (ref. 2), and arbitrarily contoured divergent sections (ref. 2). It was found that when the length of the divergent section of a conical nozzle was decreased by increasing the divergence angle, the thrust coefficient decreased. For example, an increase in the divergence angle from 7° to 50° decreased the peak thrust coefficient from approximately 0.97 to 0.93. Moderate underexpansion reduced the length of the divergent section without causing serious performance losses. For a given length, the arbitrary divergent-section contours had lower peak thrust coefficients than simple conical divergent sections.

4055

Another approach to the problem of reducing the divergent-section length would be to study the performance trends of short nozzles with contours based on a characteristic solution. There is little change in cross-sectional area along the latter part of the divergent section of a nozzle designed by the method of characteristics. A large part of the divergent section could, therefore, be cut off without seriously affecting the nozzle-expansion ratio. This investigation was conducted to (1) determine the performance characteristics of a short nozzle designed by the method of characteristics, and (2) determine whether this basic-nozzle contour will provide a higher thrust coefficient than a conical nozzle of equivalent length when the basic nozzle is shortened by cutting off part of the divergent section.

The basic nozzle used for this investigation was designed by the method of characteristics for a pressure ratio of 15. The ratio of divergent-section length to throat diameter, l_d/d, was varied from the basic design value of 2.65 to 0.79 by cutting off parts of the divergent section. The ratio of inlet section length to throat diameter l_{in}/d of the nozzle inlet was varied from a value of 1.4 to 0.4. These nozzles were investigated over a range of nozzle pressure ratios from 1.5 to 22.

APPARATUS AND INSTRUMENTATION

Nozzle Configurations

The divergent section of the basic nozzle used in this investigation was designed by the method of characteristics. It had the shortest l_d/d consistent with uniform exit flow at a pressure ratio of 15. (All symbols are defined in appendix A.) A sketch of the nozzle is shown in figure 1(a). A sharp corner at the throat of the nozzle enabled the divergent section to be shorter than a "characteristics" nozzle with a continuous contour at the throat section. This nozzle will be referred to herein as the sharp-throat characteristics nozzle. A description of the design procedure and the coordinates of the divergent section are given in reference 3. The l_d/d of the divergent section is 2.65. The length of the

divergent section was decreased to values of l_d/d of 1.98, 1.3, and 0.79 by cutting off various lengths of the divergent section (fig. 1(a)).

Two inlet sections with l_{in}/d equal to 1.4 and 0.4 were investigated. Sketches of these inlets are shown in figure 1(b).

4055

CT-1 back

Installation

The nozzles were installed in a test chamber, which was connected to the laboratory compressed-air and altitude-exhaust facilities, as shown in figure 2. The nozzles were bolted to a mounting pipe, which was freely suspended by four flexure rods connected to the bed plate. Pressure forces acting on the nozzle and mounting pipe, both externally and internally, were transmitted from the bed plate through a flexure-plate-supported bell crank and linkage to a balanced-air-pressure diaphragm force-measuring cell. Pressure differences across the nozzle and mounting pipe were maintained by labyrinth seals around the mounting pipe, which separated the nozzle-inlet air from the exhaust. The space between the two labyrinth seals was vented to the test chamber. This decreased the pressure differential across the second labyrinth and prevented a pressure gradient on the outside of the diffuser section due to an air blast from the labyrinth seal.

Instrumentation

Pressures and temperatures were measured at various stations (fig. 2). Total- and wall-static-pressure measurements at station 1 were used to compute inlet momentum, and total- and static-pressure measurements (stream and wall static) at station 2 were used to compute air flow. Total pressure and temperature were measured at the nozzle inlet (station 3). Ambient exhaust pressure was provided at station 0, and a static-pressure survey was made on the outside walls of the bellmouth inlet. Wall static pressures were measured along the divergent section of each of the nozzles.

PROCEDURE

Performance data for each configuration were obtained over a range of nozzle pressure ratios at a constant air flow. The nozzle pressure ratio was varied from about 1.5 to approximately 22, which was the limit obtainable with the air supply and exhauster facilities.

The thrust coefficient was calculated by dividing the actual jet thrust by the ideal thrust. The actual jet thrust was computed from the force measured by the balanced-air-pressure diaphragm and from pressure and temperature measurements made throughout the setup. The ideal jet thrust was defined as the product of the measured mass flow and the isentropic jet velocity, which was based on the nozzle pressure ratio and the nozzle-inlet temperature. The methods of calculation used in this report are shown in appendix B.

4055

RESULTS AND DISCUSSION

General Performance Characteristics

The performance characteristics obtained with the sharp-throat characteristics nozzle, which was designed for a nozzle pressure ratio of 15, are shown in figure 3. Nozzle thrust coefficient is plotted against nozzle pressure ratio. The peak thrust coefficient, which occurred at the design pressure ratio, was 0.976.

It would be desirable to reduce the length of the sharp-throat characteristics nozzle and still maintain high performance. Because of the contour of the sharp-throat characteristics nozzle, there is little change in cross-sectional area along the latter part of the divergent section. Therefore, a portion of the divergent section could be cut off without seriously affecting the nozzle expansion ratio.

The effect of reducing the divergent-section length of the sharp-throat characteristics nozzle on thrust coefficient is shown in figure 4. A reduction in l_d/d to 1.98 had no measurable effect on nozzle performance except at the very low pressure ratios. Reductions in l_d/d to values of 1.3 and 0.79 showed no effect on the magnitude of the peak thrust coefficient. For these values of l_d/d the peak thrust coefficient did, however, occur at pressure ratios lower than design because of the reduction in nozzle expansion ratio. At the design pressure ratio of 15, however, a 70 percent reduction in the divergence section length ($l_d/d = 0.79$) caused only a 1 percent decrease in thrust coefficient below that of the basic nozzle.

4055

Comparison of Sharp-Throat Characteristics Nozzles with Conical Nozzles

A comparison of the sharp-throat characteristics nozzle with the optimum that can be obtained with a conical nozzle is shown in figure 5. The nozzle thrust coefficient is plotted as a function of the divergent section l_d/d for a nozzle pressure ratio of 15. The sharp-throat characteristics-nozzle curve is a cross-plot from figure 4. The curve for the conical nozzles was made up of a locus of points for the optimum performance of nozzles having divergence angles ranging from 7° to 50°. At low values of l_d/d or high divergence angles, the best performance was obtained when the conical nozzle were moderately underexpanded. The sharp-throat characteristics nozzle gives a higher thrust coefficient than a conical nozzle of the same length (fig. 5). For example, at an l_d/d of 1.5 the thrust coefficient of the sharp-throat characteristics nozzle is about 1 percentage point higher than a conical nozzle.

As shown in figure 5 the thrust coefficient of the sharp-throat characteristics nozzle drops off when l_d/d is 1.5 and below. It might be expected that higher values of the thrust coefficient could be obtained at these low values of l_d/d by designing the basic nozzle for a pressure ratio higher than 15 and then cutting it back. The nozzle would then have a higher expansion ratio for a given l_d/d and the underexpansion losses would be decreased. This condition is illustrated in the following sketch:

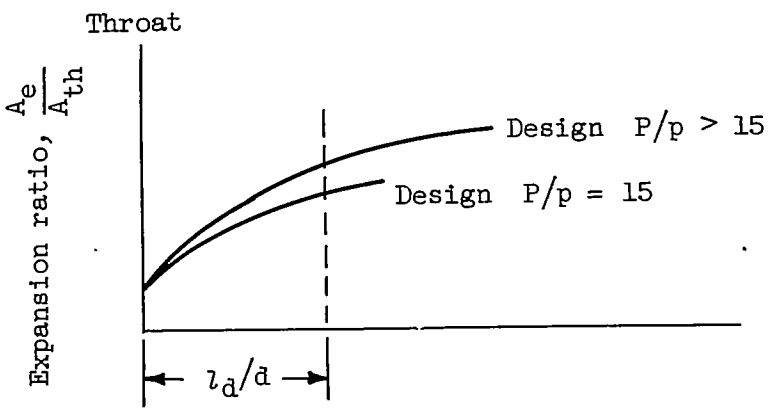

There will, however, be a limit to this procedure because as the basic design pressure ratio increases, the discharge angle at the exit will increase for a given l_d/d. The thrust coefficient will then become adversely affected by the discharge angle as previously observed with conical nozzles.

Effect of Inlet-Section Length on Nozzle Performance

It was found that relatively abrupt nozzle-inlet sections could be used without affecting the nozzle thrust coefficient. This is illustrated in figure 6, where thrust coefficient is plotted as a function of nozzle pressure ratio for the two inlet sections that were investigated. These inlet sections had values of l_{in}/d of 1.4 and 0.4. The inlet sections, which are shown in figure 1(b), were interchangeable with the divergent section shown in figure 1(a).

4055

The only effect that the abrupt inlet had on nozzle performance was to reduce the air-flow parameter $W_a\sqrt{\theta}/A_{th}\delta$ from 0.336 to 0.332 as shown in figure 7. These values of air-flow parameter were typical for the other nozzles presented herein. The reduction in the air-flow parameter was caused by a 1 percent decrease in effective throat area due to a high rate of contraction ahead of the throat. As shown in reference 2, abrupt inlet sections had the same effect on the performance of simple conical nozzles.

SUMMARY OF RESULTS

The internal performance characteristics of a convergent-divergent nozzle that was designed by the method of characteristics were obtained over a range of nozzle pressure ratios from 1.5 to 22. It had the shortest divergent section that was consistent with uniform exit flow at a pressure ratio of 15.

This nozzle had a peak thrust coefficient of 0.976, which occurred at the design pressure ratio. The length of the divergent section was reduced from the design value of 2.65 to 0.79 by cutting off portions of the divergent section. This had no effect on the magnitude of the peak thrust coefficient. The peak thrust coefficient for the shorter lengths occurred at pressure ratios below the design value of 15 because of a reduction in expansion ratio. At a pressure ratio of 15 a 70 percent reduction in the divergent-section length caused only about a 1 percent decrease in the thrust coefficient below that of the basic nozzle. The contour given by the characteristics solution provided higher thrust coefficients for a given length than a simple conical divergent section.

Abrupt-inlet approach sections permitted reduction in nozzle length without decreasing thrust coefficient. The only effect the abrupt inlet had on nozzle performance was a slight reduction in the flow coefficient.

Lewis Flight Propulsion Laboratory
National Advisory Committee for Aeronautics
Cleveland, Ohio, May 9, 1956

4055

APPENDIX A

SYMBOLS

A	inside area, sq ft
A_L	pipe area under labyrinth seal, sq ft
A_{th}	throat area, sq ft
C_T	thrust coefficient
d	throat diameter, ft
F	thrust, lb
F_d	balanced-air-pressure-diaphragm reading, lb
g	acceleration due to gravity, 32.17 ft/sec^2
l_d	length of divergent section, ft
l_{in}	length of inlet section, ft
P	total pressure, lb/sq ft
p	static pressure, lb/sq ft
p_{bm}	integrated static pressure acting on outside of bellmouth inlet to station 2, lb/sq ft
R	gas constant, 53.35 ft-lb/(lb)($^{\circ}$R) for air
T	total temperature
V	velocity, ft/sec
W_a	air flow, lb/sec
$\frac{W_a\sqrt{\theta}}{A_{th}\delta}$	corrected air-flow parameter, (lb/sec)/sq in.
γ	ratio of specific heats
δ	ratio of total pressure at nozzle inlet to absolute pressure at NACA standard sea-level conditions

θ ratio of total temperature at nozzle inlet to absolute temperature at NACA standard sea-level conditions

Subscripts:

e exit

i ideal

j jet

0 exhaust or ambient

1 bellmouth inlet

2 diffuser inlet

3 nozzle inlet

4055

4055

CT-2

APPENDIX B

METHODS OF CALCULATION

Air flow. - The nozzle air flow was calculated as

$$W_{a,2} = \frac{p_2 A_2}{RT_3} \sqrt{\frac{2g\gamma}{\gamma - 1}\left[\left(\frac{P_2}{p_2}\right)^{\frac{\gamma-1}{\gamma}} - 1\right]\left(\frac{P_2}{p_2}\right)^{\frac{\gamma-1}{\gamma}}}$$

where γ was assumed to be 1.4.

Thrust. - The jet thrust was defined as

$$F_j = \frac{W_{a,2}}{g} V_e + A_e \left(p_e - p_0\right)$$

and was calculated from the equation

$$F_j = \frac{W_{a,2}}{g} V_1 + p_1 A_1 - p_{bm} A_1 + A_L \left(p_{bm} - p_0\right) - F_d$$

The ideally available jet thrust, which was based on measured mass flow, was calculated as

$$F_i = W_{a,2} \sqrt{\frac{2R}{g} \frac{\gamma}{\gamma - 1} T_3 \left[1 - \left(\frac{p_0}{P_3}\right)^{\frac{\gamma-1}{\gamma}}\right]}$$

Thrust coefficient. - The thrust coefficient is defined as the ratio of the actual to ideal jet thrust

$$C_T = \frac{F_j}{F_i}$$

REFERENCES

1. Steffen, Fred W., Krull, H. George, and Schmiedlin, Ralph F.: Effect of Divergence Angle on the Internal Performance Characteristics of Several Conical Convergent-Divergent Nozzles. NACA RM E54H25, 1954.

2. Steffen, Fred W., Krull, H. George, and Schmiedlin, Ralph F.: Effects of Several Geometric Variables on Internal Performance of Short Convergent-Divergent Exhaust Nozzles. NACA RM E54L09, 1955.

3. Clippinger, R. F.: Supersonic Axially Symmetric Nozzles. Rep. No. 794, Ballistic Res. Labs., Aberdeen Proving Ground (Maryland), Dec. 1951. (Proj. No. TB3-0118Y of Res. and Dev. Div., Ord. Corps.)

4055

4055

CT-2 back

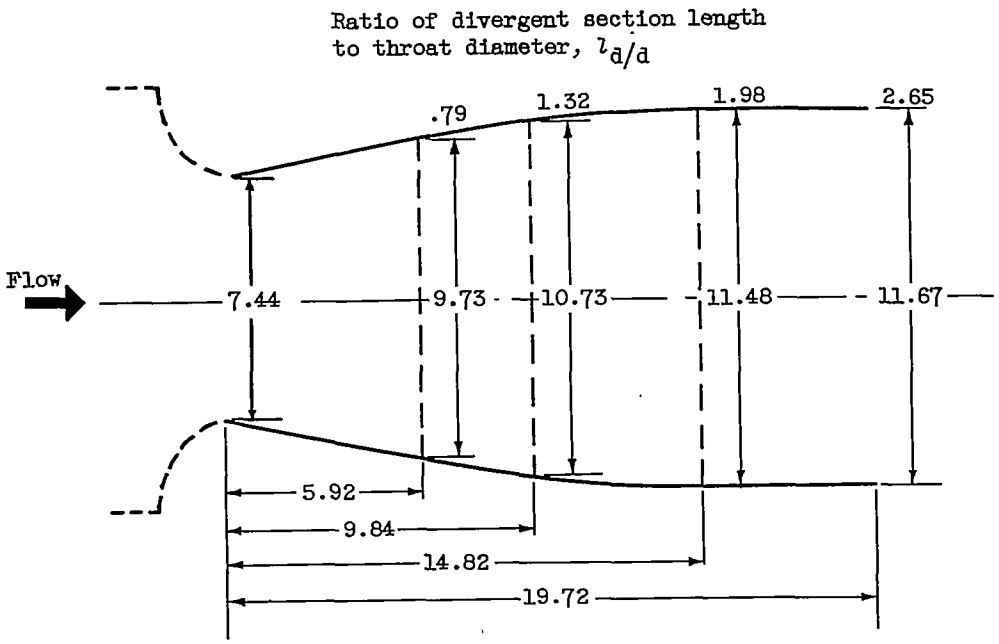

(a) Divergent section

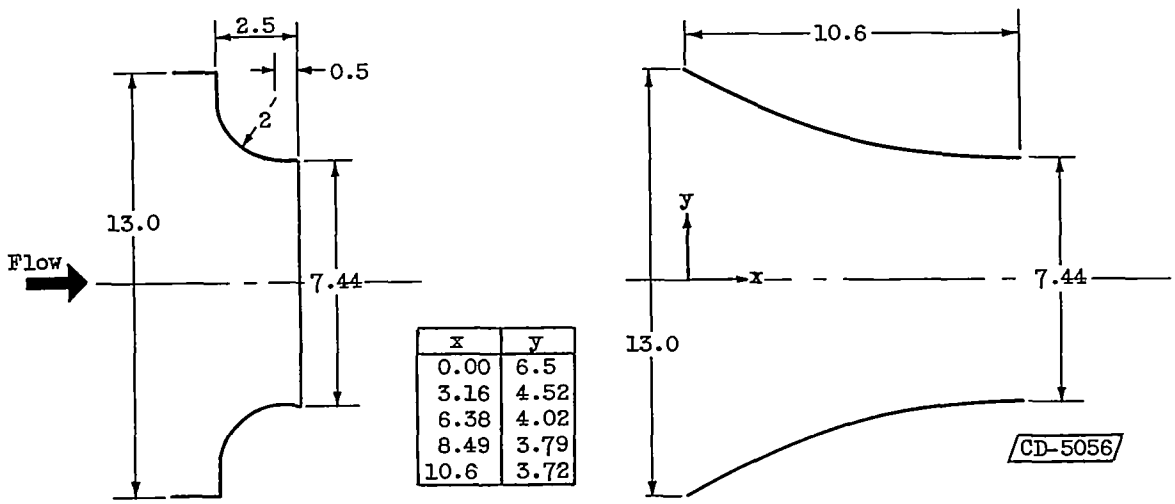

x	y
0.00	6.5
3.16	4.52
6.38	4.02
8.49	3.79
10.6	3.72

Abrupt inlet;
ratio of inlet section length
to throat diameter, 0.40.
$l_{in/d}$ = 0.40.

Long inlet;
ratio of inlet section length
to throat diameter, 1.40
$l_{in/d}$ = 1.40

(b) Inlet sections

Figure 1. - Nozzle dimensions. (All dimensions in inches.)

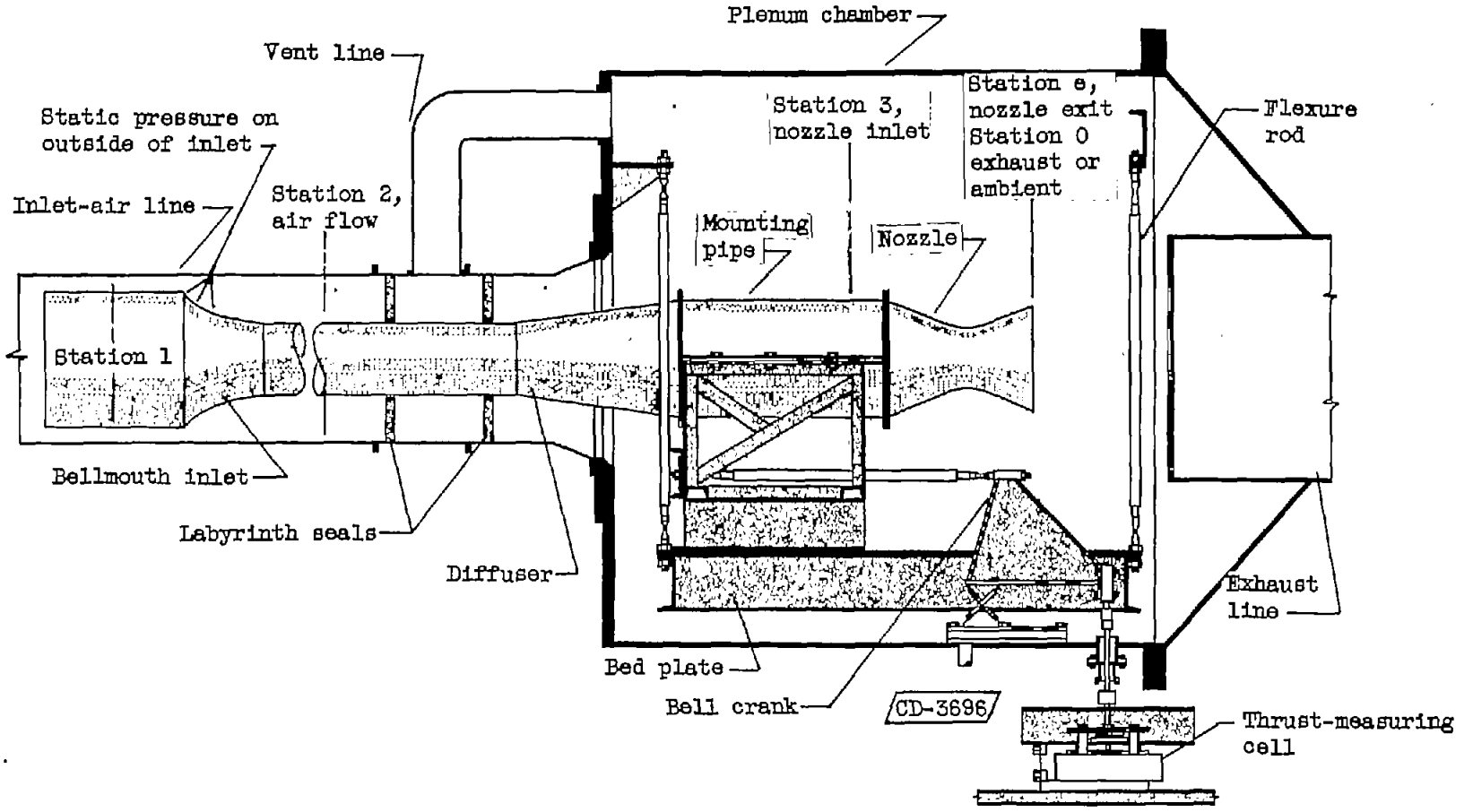

Figure 2. - Installation of nozzle in test chamber.

4055

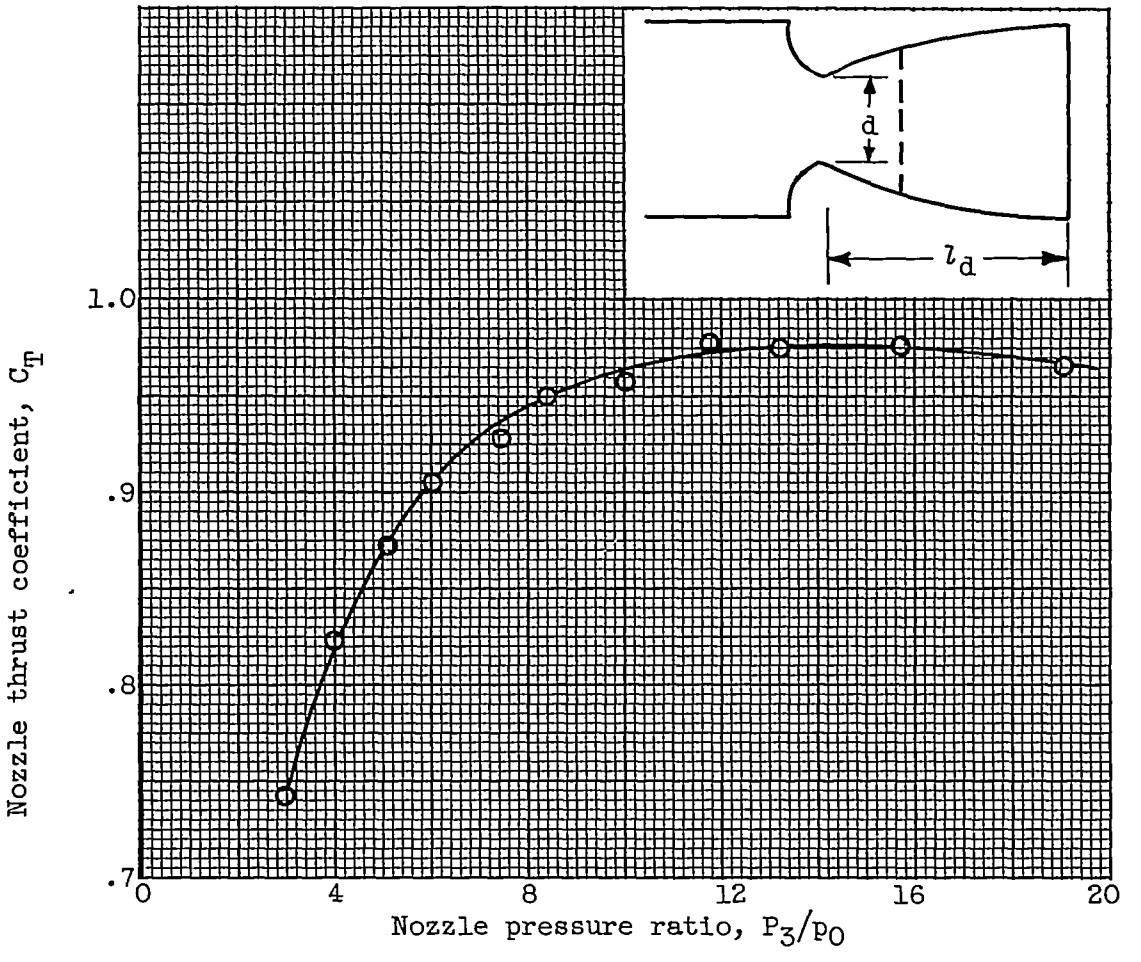

Figure 3. - Performance of sharp-throat "characteristics" nozzle designed for pressure ratio of 15. Ratio of divergent section length to throat diameter, l_d/d, 2.65; expansion ratio, A_e/A_{th}, 2.45.

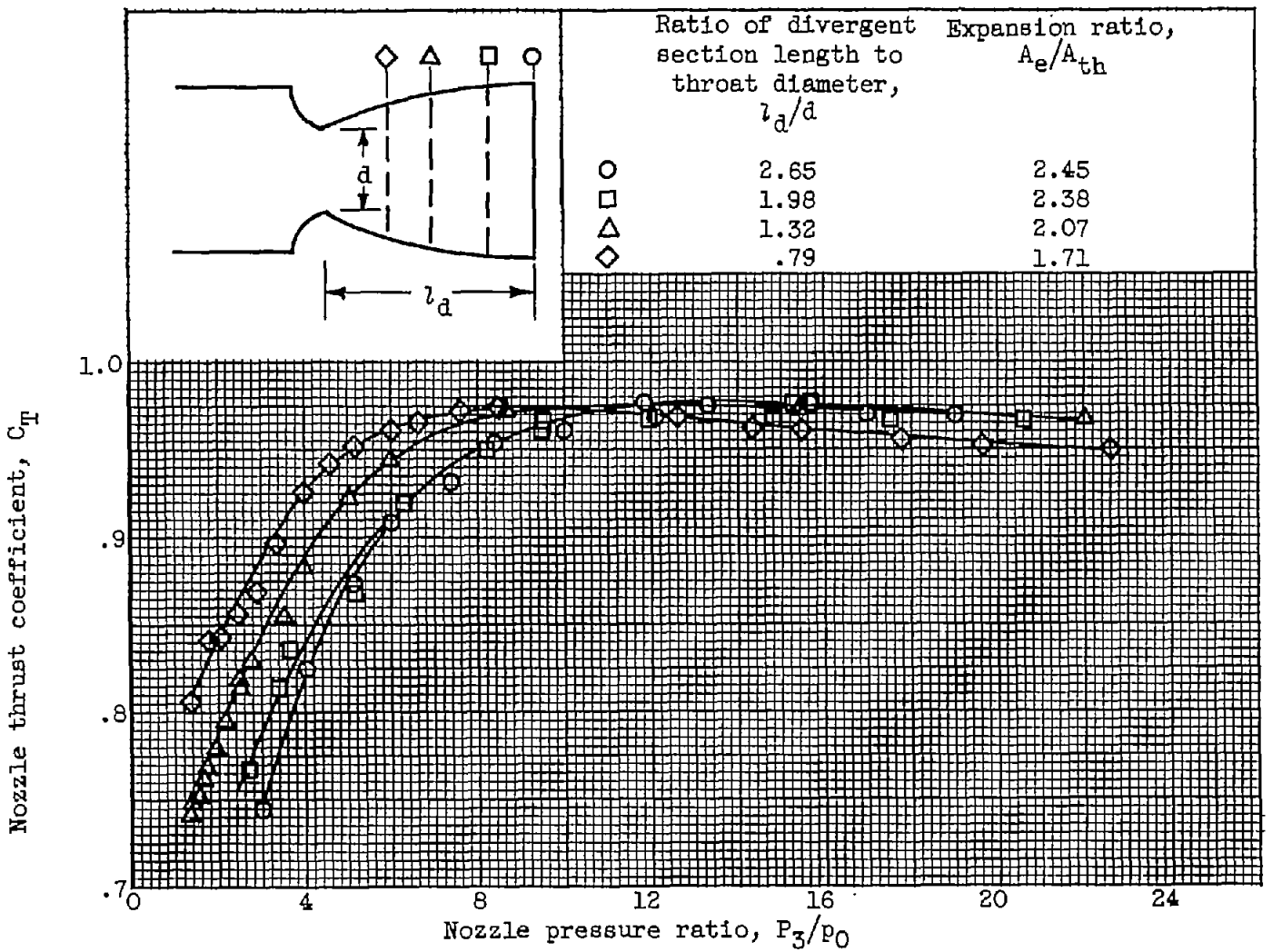

Figure 4. - Effect of cutting off various lengths of the divergent section on nozzle performance.

[redacted]

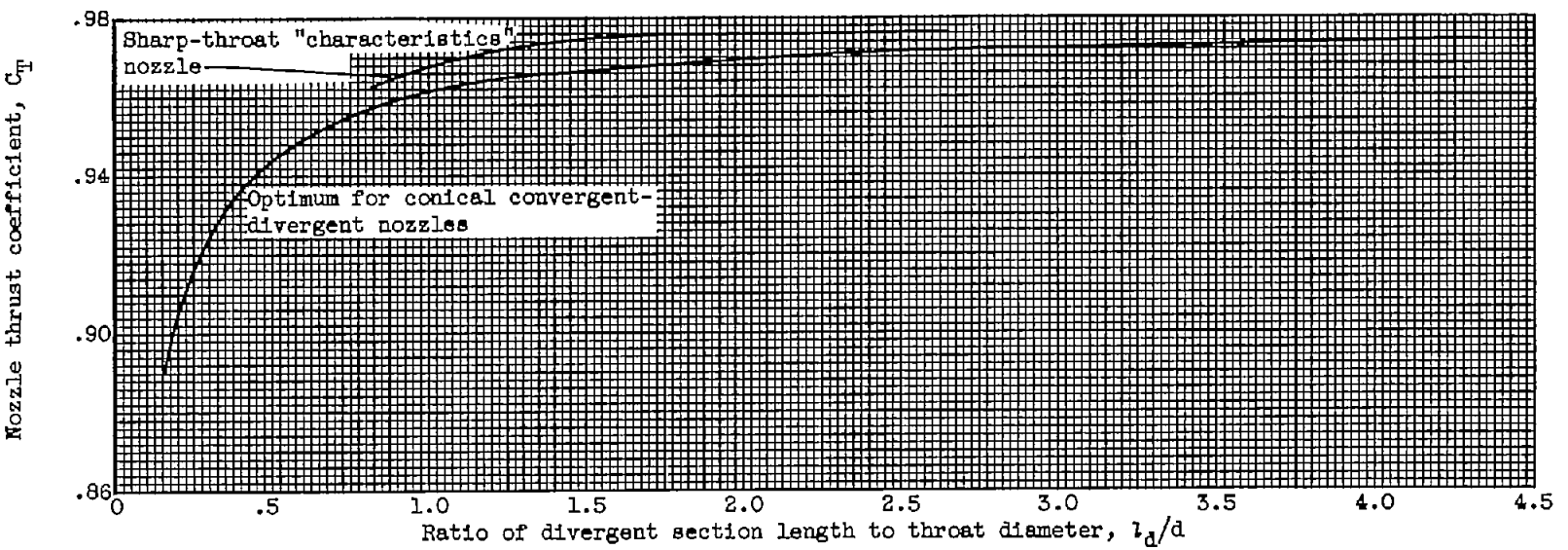

Figure 5. - Comparison of sharp-throat "characteristics" nozzles with conical convergent-divergent nozzles at a nozzle-pressure ratio of 15.

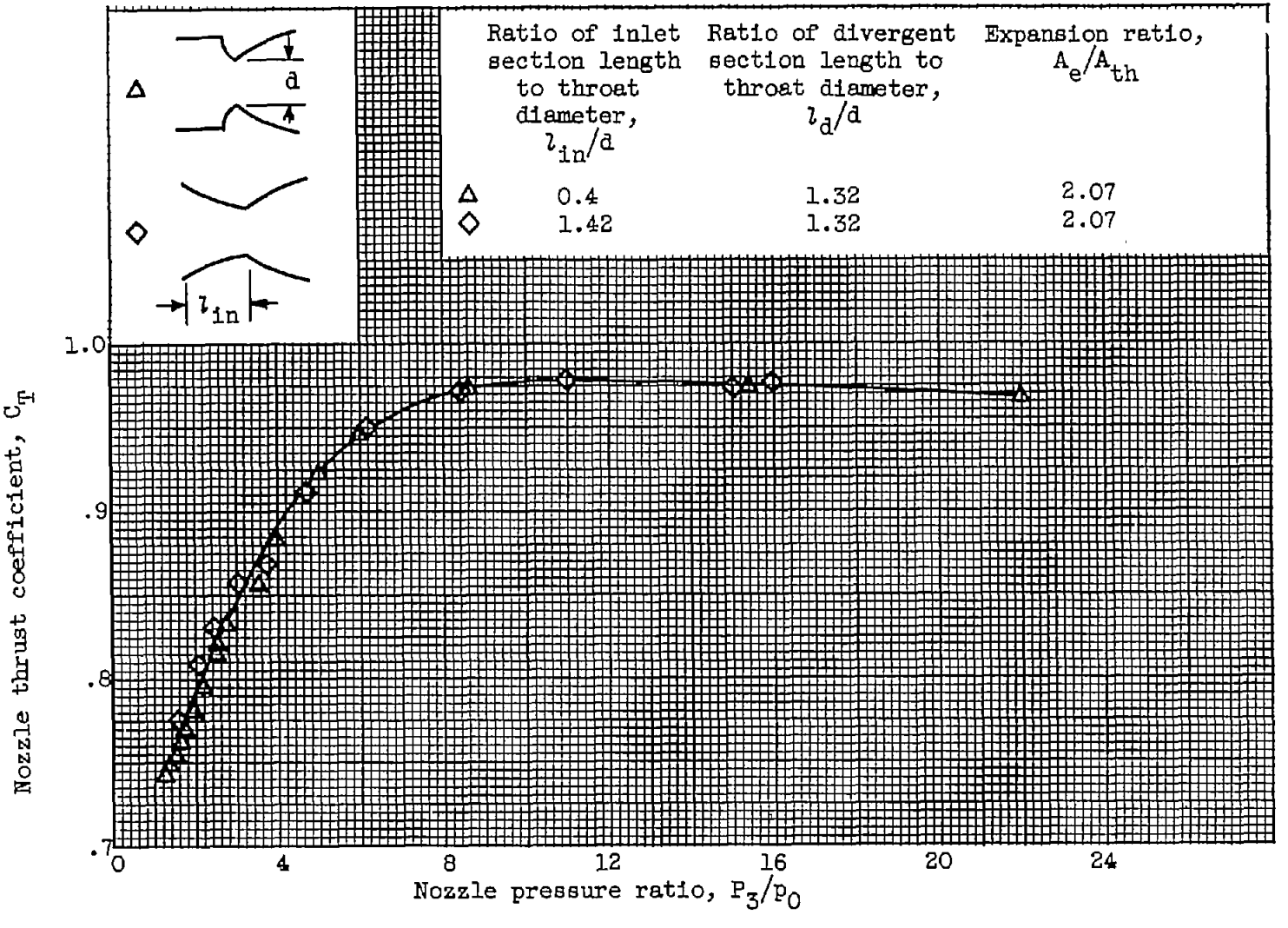

Figure 6. - Effect of long and short inlet on nozzle performance.

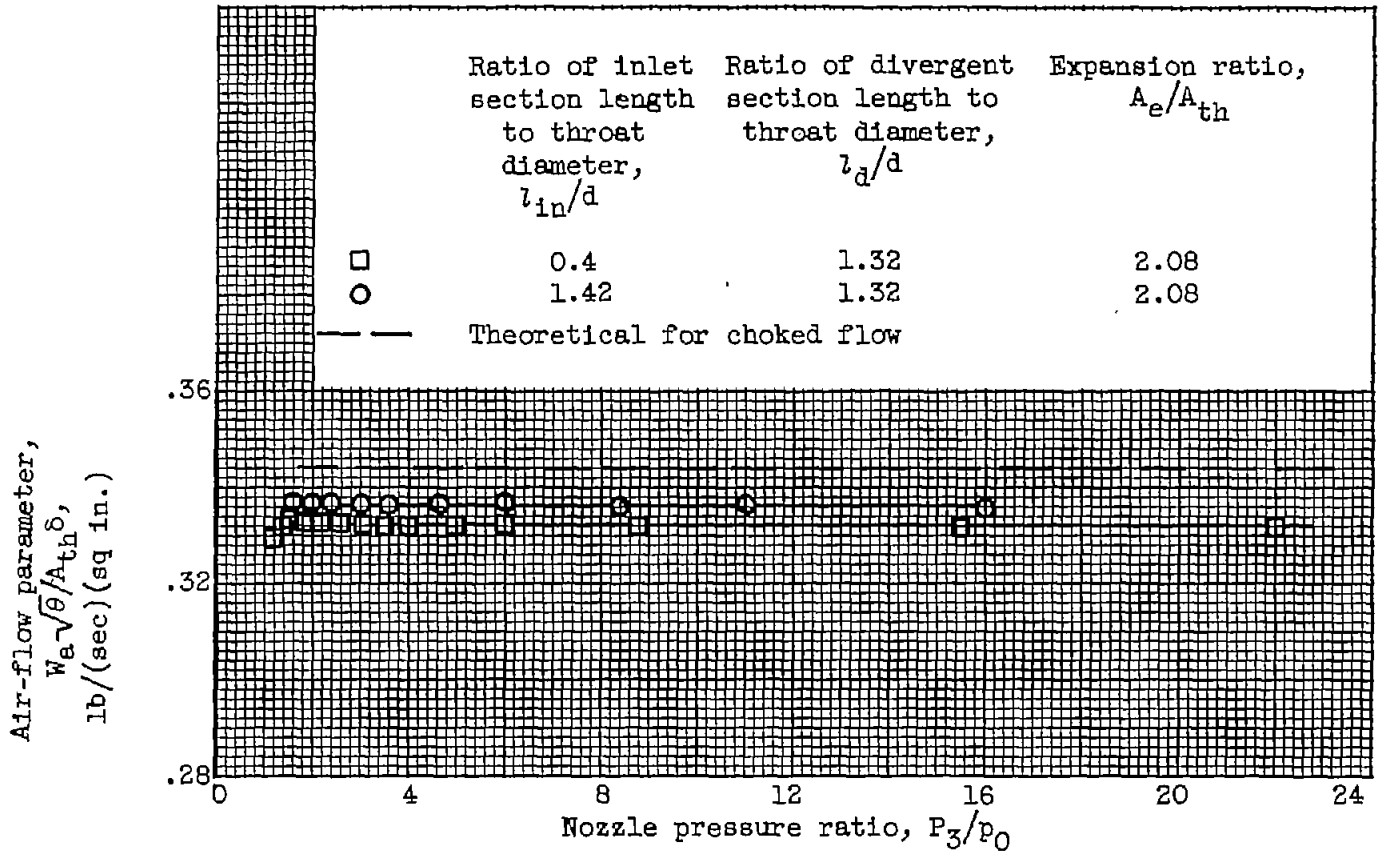

Figure 7. - Effect of nozzle-inlet section on air-flow parameter of sharp-throat "characteristics" nozzle.

NACA - Langley Field, Va.