[redacted]

[redacted]

Copy 235
RM E56E23a

NACA RM E56E23a

Key # 10915
JAN 4 1956

TECH LIBRARY KAFB, NM
0143766

TECH
AFL 2811

NACA

RESEARCH MEMORANDUM

9969

EFFECT OF VARIABLE-POSITION INLET GUIDE VANES AND INTERSTAGE BLEED ON COMPRESSOR PERFORMANCE OF A HIGH-PRESSURE-RATIO TURBOJET ENGINE

By S. C. Huntley and Willis M. Braithwaite

Lewis Flight Propulsion Laboratory
Cleveland, Ohio

[redacted]

[redacted]

NATIONAL ADVISORY COMMITTEE
FOR AERONAUTICS

WASHINGTON
December 28, 1956

[redacted]

Classification cancelled (or changed to UNCLASSIFIED)

By Authority of NASA Tech Pub Announcement #9
(OFFICER AUTHORIZED TO CHANGE)

By ..... 29 Sep 58
NAME AND

.....
GRADE OF OFFICER MAKING CHANGE)

17 MAR 61
DATE

TECH LIBRARY KAFB, NM
0143766

NATIONAL ADVISORY COMMITTEE FOR AERONAUTICS

RESEARCH MEMORANDUM

EFFECT OF VARIABLE-POSITION INLET GUIDE VANES AND INTERSTAGE BLEED ON COMPRESSOR PERFORMANCE OF A HIGH-PRESSURE-RATIO TURBOJET ENGINE

By S. C. Huntley and Willis M. Braithwaite

SUMMARY

The over-all and inlet-stage compressor performance of a high-pressure-ratio turbojet engine was determined in an altitude test chamber. The engine was equipped with variable-position inlet guide vanes and interstage bleed. Over-all compressor performance without interstage bleed was determined for a range of inlet-guide-vane positions from -5° to 20° from design, a range of engine speeds from 85 to 105 percent of rated corrected speed, and a range of exhaust-nozzle areas from 106 to 153 percent of rated. Over-all performance with interstage bleed was also obtained with the 20° inlet-guide-vane position. Performance of the first three stages was determined with open- and closed-position inlet guide vanes, with or without interstage bleed, for a range of engine speeds from 36 to 110 percent of rated corrected speed and exhaust-nozzle areas of 100 and 153 percent of rated area. The data were obtained at simulated flight conditions corresponding to a Reynolds number index of 0.4.

Increased inlet-guide-vane turning generally resulted in poorer over-all performance, the decrease being greatest at the highest corrected rotor speed. Over-all compressor efficiency was unaffected by small changes in inlet-guide-vane position at near-design position.

Rotating stall originating at the tips of the first stage resulted in a deficiency in stall-limit performance, apparently by interaction phenomena with several succeeding stages, and subsequently resulted in a knee in the stall-limit line. Closing the inlet guide vanes from open position shifted the first-stage performance to lower values of pressure and flow coefficients, which subsequently shifted the stall-free performance of the first stage and the knee in the stall-limit line to a lower corrected rotor speed.

[redacted]

[redacted]

Opening the interstage bleed ports reduced the rotor speed for stall-free performance of the first stage and tended to eliminate the knee in the stall-limit line. Increasing the stall-free performance range of the first stage by both increased inlet-guide-vane turning and interstage bleed resulted in an improvement in stall margin and made steady-state operation possible over the entire speed range.

INTRODUCTION

The continuing demand for turbojet engines with improved fuel economy has led to the development of high-pressure-ratio axial-flow compressors with improved cycle efficiency. Achieving a high pressure ratio with a single-spool fixed-geometry compressor has resulted in a severe stage-matching problem, narrowing the speed range over which efficient performance can be obtained. The characteristically poor performance at low speed is a result of operating the inlet compressor stages at angles of attack associated with blade stall and, consequently, low efficiency. This deterioration in the performance of inlet stages at reduced speed also may result in a knee in the stall-limit line that restricts the acceleration capabilities of an engine using the compressor. As indicated in references 1 and 2, the part-speed performance of inlet stages can be improved without compromising design-speed performance by using variable inlet guide vanes or interstage bleed. In addition, a compressor having variable inlet guide vanes may be utilized to effect rapid engine thrust modulation, which is a desirable feature for certain airplane maneuvers such as waveoffs, vertical takeoffs, and so forth.

An engine with variable-position inlet guide vanes and interstage bleed was investigated in an altitude test chamber at the NACA Lewis laboratory. During high-speed operation, the engine normally operates with the interstage bleed ports closed and with the inlet guide vanes in an open position. During part- and low-speed operation, the bleeds are open and the vanes closed. During operation at part speed, a considerable improvement in stall margin is obtained with the normal low-speed configuration over that of the normal high-speed configuration (ref. 3).

In order to gain an insight into the mechanism by which this improvement in stall margin is obtained, the stage performance characteristics of the inlet stages were determined. Data were obtained to show the effects of opening bleeds and closing inlet guide vanes, individually and combined, on the stage performance of the first three stages. In addition, the effect of varying inlet-guide-vane position on over-all compressor performance in the high-speed range was determined. The stage data cover a range of rotor speeds from 36 to 110 percent of rated with exhaust-nozzle areas of 100 and 153 percent of rated. The data were obtained at simulated flight conditions corresponding to a Reynolds number index of 0.4 with an inlet-air temperature of -40° F.

Over-all compressor performance data with the interstage bleed ports closed were obtained for variations in inlet-guide-vane position from -5° to 20° from design position. These data cover a range of rotor speeds from 85 to 105 percent of rated speed with exhaust-nozzle settings from 106 to 153 percent of rated area. The effect of interstage bleed on over-all performance was also determined at the closed inlet-guide-vane position (20° from design). For these data, the simulated flight conditions corresponded to a Reynolds number index of 0.4 with an inlet-air temperature of -4° F.

APPARATUS

Engine and Installation

The turbojet engine, which has a bifurcated inlet, a 16-stage axial-flow compressor, a cannular combustor, a three-stage turbine, an afterburner, and a continuously variable iris-type exhaust nozzle, is in the 10,000-pound-thrust class (without afterburning). The normal engine control was modified for this investigation to permit positioning of the inlet guide vanes and interstage bleeds independently of engine speed. The exhaust nozzle was also positioned independently of engine speed so that a range of compressor pressure ratios could be obtained at any given corrected rotor speed.

The engine was installed in a 10-foot-diameter, 60-foot-long altitude test chamber (fig. 1). The test chamber has two compartments. Essentially quiescent air was supplied to the front compartment at a pressure and temperature simulating the desired engine-inlet condition. Combustion air entered the engine from the front compartment through a bellmouth, a venturi, and inlet ducting. The venturi was used to measure compressor air flow. The rear compartment, containing the engine, was exhausted to maintain the desired altitude static pressure.

Compressor

The 16-stage axial-flow compressor had a constant tip diameter of 33.5 inches, an inlet hub-tip diameter ratio of 0.55, and an exit hub-tip diameter ratio of 0.90. At static sea-level conditions with rated engine operation (inlet guide vanes open, interstage bleeds closed), the compressor air flow is approximately 165 pounds per second; the pressure ratio, 8.5; the efficiency, 0.81; and the rotor speed, 6175 rpm.

The normal open position of the inlet guide vanes (reference angle, 0°) for rated-speed operation of the engine corresponds to an angle of 14° between the blade chord line and engine axis (measured near blade root). The closed position (reference angle, 20°) corresponds to an

angle of 34°. The bleed system extracts air from the compressor case over the eighth-stage rotor. The system accommodates a corrected weight flow of about 8 pounds per second in the intermediate-speed range from 2500 to 5000 rpm.

The manufacturer's control system changes the bleed and inlet-guide-vane positions simultaneously at an actual engine speed of 5300 rpm. Above 5300 rpm, the bleeds are closed and guide vanes opened; below 5300 rpm, the bleeds are opened and guide vanes closed. For this investigation, the control system was modified so that interstage bleed and guide-vane position could be opened or closed independently. For a part of the investigation, the inlet-guide-vane position was varied from a reference angle of -5° to 20°.

4053

Instrumentation

A cross section of the compressor showing stations at which pressure and temperature instrumentation was installed is shown in figure 2. Also shown in figure 2 are station views and a table summarizing the pressure and temperature instrumentation at each station. The probes at each station were located on area centers of equal annular areas. Previous experience indicates that the major effect of inlet-guide-vane turning on individual stage performance occurs in the inlet stage. Interstage instrumentation was installed across the first three stages to assure a reliable indication of both the effect of inlet-guide-vane turning and the effect of interstage bleed on individual stage performance.

PROCEDURE

Inlet pressure and temperature and ambient exhaust pressure were set to simulate flight conditions corresponding to a Reynolds number index of 0.4 with a ram-pressure ratio of 1.67. Reynolds number index is herein defined as a ratio of the inlet-duct Reynolds number at a given flight condition to that at NACA standard atmospheric conditions with Mach number similarity. The inlet temperature for stage performance data was -40° F, and for over-all performance data was -4° F. Data were recorded at several rotor speeds along steady-state operating lines with fixed values of inlet-guide-vane position, interstage-bleed position, and exhaust-nozzle area. Inlet-guide-vane settings from -5° to 20° from design were used. Interstage bleed ports were either open or closed. Exhaust-nozzle areas from 100 to 153 percent of rated area were used. The engine was operated over a range of rotor speeds from 36 to 110 percent of rated corrected speed.

The symbols used in this report and methods of data reduction are given in appendixes A and B, respectively.

RESULTS AND DISCUSSION

The bifurcated inlet used on the engine may affect the compressor performance presented herein as a result of inlet air-flow distortion. A smooth approach to the bellmouth section resulted in a uniform pressure distribution in the venturi section, but a nonuniform pressure profile was found entering the inlet guide vanes. Typical radial pressure profiles at the entrance to the inlet guide vanes (station 2, fig. 2) are presented in figure 3. Also shown in figure 3 is the variation in magnitude of pressure profiles with corrected rotor speed. Radial profiles at several angular positions (fig. 3(a)) show the presence of a circumferential variation in pressure greater than that in a radial direction at the indicated points of measurement. Although the total magnitude of pressure distortion measured (both radial and circumferential) is considered quite small (about 5 percent at rated corrected rotor speed), it may still have had an effect on compressor performance.

4053

Over-All Compressor Performance

Over-all compressor performance with each of several inlet-guide-vane positions was determined for the high-speed range of operation as part of a general program. (The effect of inlet-guide-vane position on compressor stage performance for a wide speed range of operation is presented in the next section.) A performance map for each inlet-guide-vane position is presented in figure 4 as compressor pressure ratio plotted against corrected compressor weight flow for several corrected rotor speeds. Lines of constant efficiency are also shown on each map. These maps were determined from interpolation of data obtained along steady-state operating lines encompassing the range of exhaust-nozzle areas and engine speeds investigated. The performance was obtained with no interstage bleed for each inlet-guide-vane position. In addition, performance with bleed was obtained for the closed (reference angle, 20°) inlet-guide-vane position.

The effect of inlet-guide-vane turning on over-all compressor performance is presented in figure 5 for the minimum, rated, and maximum corrected rotor speeds investigated. In general, pressure ratio, air flow, and efficiency decreased at a given corrected rotor speed as the inlet guide vanes were closed. The deterioration of performance was greatest at the maximum speed (105 percent of rated). Over-all compressor efficiency was unaffected by small changes in inlet-guide-vane

position near the open position (reference angle, 0°). The trend of the data indicates that both pressure ratio and air flow may increase with inlet guide vanes opened more than 5° beyond the normal open position (fig. 5).

Over-all compressor stall characteristics were not determined during this investigation. However, the stall characteristics of the same engine model are presented in reference 3. Stall-limit and steady-state pressure ratios are shown in figure 6 as functions of corrected rotor speed for two modes of operation. One mode represents the geometric configuration for rated-speed operation, that is, inlet guide vanes open, interstage bleeds closed, and rated exhaust-nozzle area. The other mode of operation is with the normal low-speed configuration having inlet guide vanes closed, bleeds open, and exhaust nozzle open. The difference between stall-limit and steady-state pressure ratio at a given speed represents the acceleration or stall margin for each configuration. The geometry used to obtain rated performance is unsuitable below a corrected rotor speed of about 4700 rpm, because there is no acceleration margin. Suitable acceleration at actual engine speeds of 5300 rpm and less was obtained with the normally scheduled low-speed configuration. Reference 3 shows that closing the inlet guide vanes (with bleeds closed) shifts the knee of the stall-limit line to a lower speed, while opening the bleeds tends to eliminate the knee. A part of the resultant increase in acceleration margin comes from a shift in the steady-state operating line to a lower pressure ratio at a given speed with the low-speed configuration.

4053

In order to gain an insight into the mechanism by which this improvement in acceleration (or stall) margin was obtained, stage performance characteristics were determined for each configuration. Other investigations on different compressors (e.g., ref. 2) show that inlet-guide-vane turning mainly alters inlet-stage performance. Consequently, only the performance of inlet stages was investigated.

Compressor Stage Performance

The individual stage performance of the first three stages is presented in figure 7 in terms of pressure coefficient, temperature coefficient, and efficiency as functions of flow coefficient. As these data were obtained along steady-state operating lines, stage performance at any value of flow coefficient is unique for a given rotor speed. The unique relation of flow coefficient to rotor speed is also presented for the several configurations. Data are shown with inlet guide vanes open or closed and with or without interstage bleed. Exhaust-nozzle area was varied to obtain compressor operating conditions conforming to either normal low- or high-speed engine configurations. Methods of data reduction are given in appendix B.

First-stage performance is presented in figure 7(a) for the different configurations. The major effect on first-stage performance was experienced by changing inlet-guide-vane position, which resulted in two distinct stage characteristic curves. At a given corrected rotor speed, the flow coefficient was lower with the inlet guide vanes in the closed position. Also, at a given flow coefficient, both pressure and temperature coefficients were lower with the inlet guide vanes closed. The peak pressure coefficient decreased from 0.43 to 0.31 when the inlet guide vanes were changed from the open to the closed position. Peak pressure coefficient also occurred at a lower flow coefficient with increased inlet-guide-vane turning, because the optimum angle of attack on the rotor occurred at a lower value of air flow for a given rotor speed. The peak pressure coefficients of the first stage occurred at flow coefficients of 0.60 and 0.47 for open and closed inlet-guide-vane positions, respectively. For corresponding values of flow coefficients less than these values, the decreasing pressure coefficient indicates that the stage is stalled. The increasing temperature coefficient and decreasing efficiency with decreasing flow coefficient also indicate stage stall. The difference in maximum efficiency with the change in inlet-guide-vane position is considered to be within the accuracy of the measurements. The increase in stage efficiency at low values of flow coefficient (and low speed) demonstrates the effectiveness of an increase in inlet-guide-vane turning. The improved efficiency at low speed results from a decrease in work input to the stage with increased turning. The effect of inlet-guide-vane turning on the first-stage performance of this compressor is in accord with investigations on other compressors (refs. 2 and 4). The reduction in flow coefficient at high values of rotor speed probably results from using a flow coefficient calculated with a density based on stagnation pressure and temperature which does not account for compressibility at high Mach numbers.

At low values of corrected rotor speed, interstage bleed resulted in an increase in flow coefficient (hence a reduced angle of attack) with a given inlet-guide-vane position. At low speeds, the rear compressor stages limit the air flow through the compressor; consequently, interstage bleed effectively allows more air to flow through the inlet stages. As speed is increased and the design value of inlet-to-exit density ratio is approached, inlet flow becomes near critical and interstage bleed is less effective in altering flow coefficient. An increase in flow coefficient with interstage bleed at low speed results in a large improvement in stage efficiency. For example, at a corrected rotor speed of 3000 rpm with the inlet guide vanes open, the increase in flow coefficient with interstage bleed results in a 15-point improvement in first-stage efficiency. Perhaps more significant is the fact that the stage performance is moved toward stall-free operation.

The second- and third-stage performances are presented in figures 7(b) and (c), respectively. In contrast to the large effect of inlet-guide-vane position on the performance of the first stage, inlet-guide-vane position had a small, almost negligible, effect on second- and third-stage performance. Because of difficulties associated with measuring small temperature rises across a single stage, temperature coefficients and, consequently, efficiency, are not precisely defined. Within the accuracy of the measurements, there appears to be a slight trend to higher efficiencies in the second and third stages than were measured in the first stage. Similar trends in pressure coefficient, temperature coefficient, and efficiency at low values of flow coefficient in the second- and third-stage curves (figs. 7(b) and (c)) indicate that these stages are also stalled. Peak performance of both second and third stages occurred at a flow coefficient of about 0.6. The peak performance of these stages occurs at about the same value of flow coefficient as for the first stage with inlet guide vanes in open position. Interstage bleed resulted in an increase in flow coefficient in the second and third stages in a manner similar to that in the first stage, and hence was beneficial at low speeds.

4053

As previously mentioned, there were indications that all three stages were stalled at values of flow coefficient less than those required for peak performance. Stall measurements were not obtained during this investigation; however, some rotating-stall data were obtained on the same engine model and are presented in reference 3. The available data indicate that rotating stall occurs in a region of flow coefficient less than that required for first-stage peak pressure coefficient.

Blade-element performance of the first stage was calculated to determine where rotating stall originates along the blade. Blade-element pressure coefficient was determined at five equal-area segments and is presented in figure 8 as a function of corrected rotor speed. These data indicate that, as speed is reduced, rotating stall originates at the blade-tip section with either open or closed inlet guide vanes (figs. 8(c) and (d), respectively). The peak blade loading (or pressure coefficient) at the tip section remained about the same with the change in inlet-guide-vane position but occurred at a lower rotor speed for the closed inlet-guide-vane position. With the inlet guide vanes open, loading on the other blade elements increased and resulted in rotating stall extending farther down on the blades (fig. 8(c)) as rotor speed was decreased. The presence of rotating stall (as indicated by a decreasing pressure coefficient with decreasing speed) is seen to extend over about 80 percent of the blade span at a corrected rotor speed of 2600 rpm with the open inlet-guide-vane position (fig. 8(c)) as compared with about 40 percent with the closed inlet-guide-vane position (fig. 8(d)).

The effect of interstage bleed on blade-element performance is not as clearly defined in figure 8 as the effect of inlet-guide-vane position. From the previous discussion of first-stage performance (fig. 7(a)), interstage bleed would be expected to indicate a slight increase in pressure coefficient at low engine speed as a result of an increase in flow coefficient. This effect of interstage bleed on pressure coefficient would diminish as engine speed is increased for a given inlet-guide-vane position. A comparison of figures 8(b) and (c) or figures 8(f) and (d) should indicate this effect of interstage bleed on pressure coefficient. With attention concentrated on the low-speed range in figure 8, the comparisons just cited indicate a trend toward higher pressure coefficients at a given engine speed in the second- and third-area segments and the first- and second-area segments, respectively. This trend of an increase in pressure coefficient with bleed is in a proper direction to indicate a less severe stall condition for either inlet-guide-vane position.

The previous discussion has shown that interstage bleed and increased inlet-guide-vane turning are both beneficial to the first-stage performance at low speed. The increased inlet-guide-vane turning had a more pronounced effect on the performance and extended over the entire speed range. The change in inlet-guide-vane position had little effect on the second- and third-stage performance. Interstage bleed was beneficial in the second and third stages at low speed, because it resulted in an increase in flow coefficient at a given speed (figs. 7(b) and (c)). This trend of increasing flow coefficient with interstage bleed at a given speed was in the proper direction to indicate a less severe stall margin of the engine. The reason for this improvement in stall margin is discussed in the following section.

Stall Margin

Effect of inlet-guide-vane position. - A compressor-stall investigation on the same engine model indicated the presence of a knee in the stall-limit line with the normal high-speed configuration (inlet guide vanes open, bleeds closed, exhaust-nozzle area rated). It was further shown that closing the inlet guide vanes resulted in shifting the knee to a lower engine speed (about 3900 rpm). In addition, steady-state operation, which was restricted to corrected engine speeds above about 4700 rpm with open inlet guide vanes, was possible over the entire speed range with closed inlet guide vanes (ref. 3). Data obtained during the present investigation do not conclusively account for this change in performance; but, in conjunction with results from other investigations on similar compressors, the data may be used to illustrate the similarity of trends in the shift of the knee.

Reference 1 shows that the knee in the stall-limit line of a similar compressor may have been the result of interaction phenomena between several stages. When several front stages are so matched that peak performance of each stage occurs at approximately the same rotor speed, unstable flow in one stage may adversely affect the performance of the entire group. An inspection of the experimental data obtained in the present investigation provides evidence of the same phenomena. Operation of the normal high-speed configuration was limited (by the stall-limit line) to corrected engine speeds above about 4700 rpm (fig. 6). This rotor speed corresponds to flow coefficients of about 0.6 for each of the first three stages (fig. 7), which corresponds to near peak performance of each stage. Altering the stage-matching point of the first stage by closing the inlet guide vanes resulted in shifting the first-stage peak-performance point to a flow coefficient of about 0.47 (fig. 7(a)) and a corresponding corrected rotor speed of about 3900 rpm. The performance of the second and third stages was unaffected by the change in inlet-guide-vane position (figs. 7(b) and (c)). This shift in peak-performance point of the first stage is in good agreement with the shift of the knee in the stall-limit line. It is concluded that the adverse effect of the first stage on succeeding stages operating near peak performance or in a region of incipient stall is responsible for the shift in the knee of the stall-limit line.

The rapid increase in stall margin at rotor speeds greater than those required for first-stage stall is an indication of the extent to which stall margin depends on first-stage performance. Also, operation at rotor speeds less than those required for first-stage stall was marginal (ref. 3). Therefore, the magnitude of the first-stage stalled region has a large bearing on whether steady-state operation is possible. The fact that the magnitude of the first-stage stalled region is greater with open inlet guide vanes (fig. 8) probably accounts for the inoperable region of rotor speed with the normal high-speed configuration. An additional factor may be the higher pressure-ratio level (pressure coefficient, fig. 7(a)) with open inlet guide vanes in this inoperable region, which is conducive to stronger pressure fluctuations and consequently greater interaction with succeeding stages.

Effect of interstage bleed. - Interstage bleed was found to be an effective means of obtaining steady-state operation over an otherwise inoperable region of rotor speed with inlet guide vanes open. Probably more significant was an increase in stall margin with interstage bleed by tending to eliminate the knee in the stall-limit line (ref. 3). This increase in stall margin with interstage bleed is in accord with the theory that interaction phenomena caused the knee in the stall-limit line. As previously discussed, a rapid increase in stall margin was obtained at rotor speeds greater than those required for first-stage stall. Any device that effectively moves the first-stage performance point into a stall-free zone of operation should, consequently, be

capable of increasing the stall margin. Interstage bleed served as such a device. At a given rotor speed, in the low-speed range, bleed increased the flow coefficient of the inlet stages and shifted the stage operating point toward stall-free performance (figs. 7 and 8). The stall-free range of first-stage performance (or less severe stall condition) then shifted to a lower range of rotor speed. It might be expected that a knee in the stall-limit line would occur at a lower speed. However, for a given value of flow coefficient, the fact that the corresponding value of pressure coefficient is at a lower engine speed results in a decrease in pressure-ratio level. Pressure-ratio level is probably an additional factor governing the degree of interaction. A lower pressure level would result in less interaction and tend to eliminate the knee. This decrease in pressure-ratio level with decreased engine speed occurs in all the inlet stages and contributes to weaker pressure fluctuations and subsequently less interaction.

Insufficient data were obtained in the present investigation to verify the effect of interstage bleed on stall margin as just discussed. Credence to this theory is provided, however, by a previous analysis on a similar compressor (ref. 5). In reference 5, the stage performance data of reference 1 were used as a basis for an analytical investigation of the effect of compressor interstage bleed. Over-all compressor performance was calculated from stage-group performance curves for performance both with and without eighth-stage bleed. A stall-limit line (or surge line) was established through the peak-performance point of the over-all compressor for each constant corrected rotor speed. In both cases, the analytically determined stall-limit line exhibited trends similar to the experimentally determined stall-limit lines of reference 3.

CONCLUDING REMARKS

The effects of variable inlet guide vanes and interstage bleed on over-all and inlet-stage performance were investigated on the compressor of a high-pressure-ratio turbojet engine.

Increased inlet-guide-vane turning decreased over-all pressure ratio, air flow, and efficiency. The decrease in over-all performance was greatest at high values of corrected rotor speed. Over-all compressor efficiency was unaffected by small changes in inlet-guide-vane turning near open inlet-guide-vane position.

Rotating stall originating at the tips of the first stage resulted in a deficiency in stall-limit performance apparently by interaction phenomena with several succeeding stages and consequently resulted in a knee in the stall-limit line. Closing inlet guide vanes from open position shifted the first-stage performance to lower values of pressure

coefficient and flow coefficient, which caused the stall-free performance of the first stage and the knee in the stall-limit line to occur at a lower corrected rotor speed.

Opening the interstage bleeds reduced further the rotor speed required to obtain stall-free performance of the first three stages and tended to eliminate the knee in the stall-limit line. Increasing the stall-free performance of the first stage by both increased inlet-guide-vane turning and interstage bleed resulted in an improvement in stall margin and made steady-state operation possible over the entire speed range.

Lewis Flight Propulsion Laboratory
National Advisory Committee for Aeronautics
Cleveland, Ohio, May 29, 1956

APPENDIX A

SYMBOLS

A_{an} annulus area, sq ft

g acceleration due to gravity, 32.17 ft/sec^2

4053

H_a total enthalpy of air, Btu/lb

J mechanical equivalent of heat, ft-lb/Btu

N rotational speed, rpm

P total pressure, lb/sq ft

U blade speed, ft/sec

w_a air flow, lb/sec

δ ratio of total pressure to NACA standard sea-level pressure of 2116 lb/sq ft

η_{ad} adiabatic efficiency

θ ratio of total temperature to NACA standard sea-level temperature of 518.7° R

ρ_T density based on stagnation pressure and temperature, lb/cu ft

φ flow coefficient

ψ performance coefficient

Subscripts:

av average

b interstage bleed

C compressor

is isentropic

m mean

max maximum

min minimum

n stage in question

P pressure

ST stage

T temperature

1 venturi station

2 compressor inlet

2a first stator

2b second stator

2c third stator

3 compressor outlet

4053

APPENDIX B

METHOD OF DATA REDUCTION

4053

Over-all performance. - Arithmetically averaged values of total pressure, static pressure, and total temperature were obtained from measurements at stations 1, 2, and 3 (fig. 2) and used to calculate over-all performance. Air flow was calculated from measurements at the venturi section (station 1, fig. 2) using a calibrated flow area. Over-all efficiency was calculated with the following expression:

$$\eta_{ad,C} = \frac{w_{a,3}(H_{a,3} - H_{a,2})_{is}}{w_{a,3}(H_{a,3} - H_{a,2}) + w_{a,b}(H_{a,b} - H_{a,2})} \tag{B1}$$

Stage performance. - Arithmetic radially averaged values of total pressure and total temperature were obtained from measurements at stations 2, 2a, 2b, and 2c. Air flow and total temperature for station 2 were assumed equal to those at station 1. Total pressure at station 2 was considered only from measurements of one rake (95°, station 2, fig. 3) to correspond to a similar angular segment used for interstage rakes. The following stage performance parameters were calculated:

Pressure coefficient:

$$\psi_P = \frac{J(H_{a,n+1} - H_{a,n})_{is}}{\left(\frac{U_m^2}{g}\right)_n} \tag{B2}$$

Temperature coefficient:

$$\psi_T = \frac{J(H_{a,n+1} - H_{a,n})}{\left(\frac{U_m^2}{g}\right)_n} \tag{B3}$$

Stage efficiency:

$$\eta_{ad,ST} = \frac{\psi_P}{\psi_T} \tag{B4}$$

Flow coefficient:

$$\varphi = \frac{w_a}{(\rho_T A_{an} U_m)_n} \tag{B5}$$

Blade-element performance. - Values of total pressure, total temperature, and blade speed at each radius were used to obtain pressure coefficient from equation (B2).

4053

REFERENCES

1. Medeiros, Arthur A., Benser, William A., and Hatch, James E.: Analysis of Off-Design Performance of a 16-Stage Axial-Flow Compressor with Various Blade Modifications. NACA RM E52L03, 1953.

2. Budinger, Ray E., and Serovy, George K.: Investigation of a 10-Stage Subsonic Axial-Flow Research Compressor. V - Effect of Reducing Inlet-Guide-Vane Turning on Over-All and Inlet-Stage Performance. NACA RM E53H10, 1954.

3. Mallett, William E., and Groesbeck, Donald E.: Effects of Compressor Interstage Bleed and Adjustable Inlet Guide Vanes on Compressor Stall Characteristics of a High-Pressure-Ratio Turbojet Engine at Altitude. NACA RM E55G27, 1956.

4. Budinger, Ray E., and Kaufman, Harold R.: Investigation of the Performance of a Turbojet Engine with Variable-Position Compressor Inlet Guide Vanes. NACA RM E54L23a, 1955.

5. Rebeske, John J., Jr., and Dugan, James F., Jr.: Acceleration of High-Pressure-Ratio Single-Spool Turbojet Engine As Determined from Component Performance Characteristics. II - Effect of Compressor Interstage Air Bleed. NACA RM E53E06, 1953.

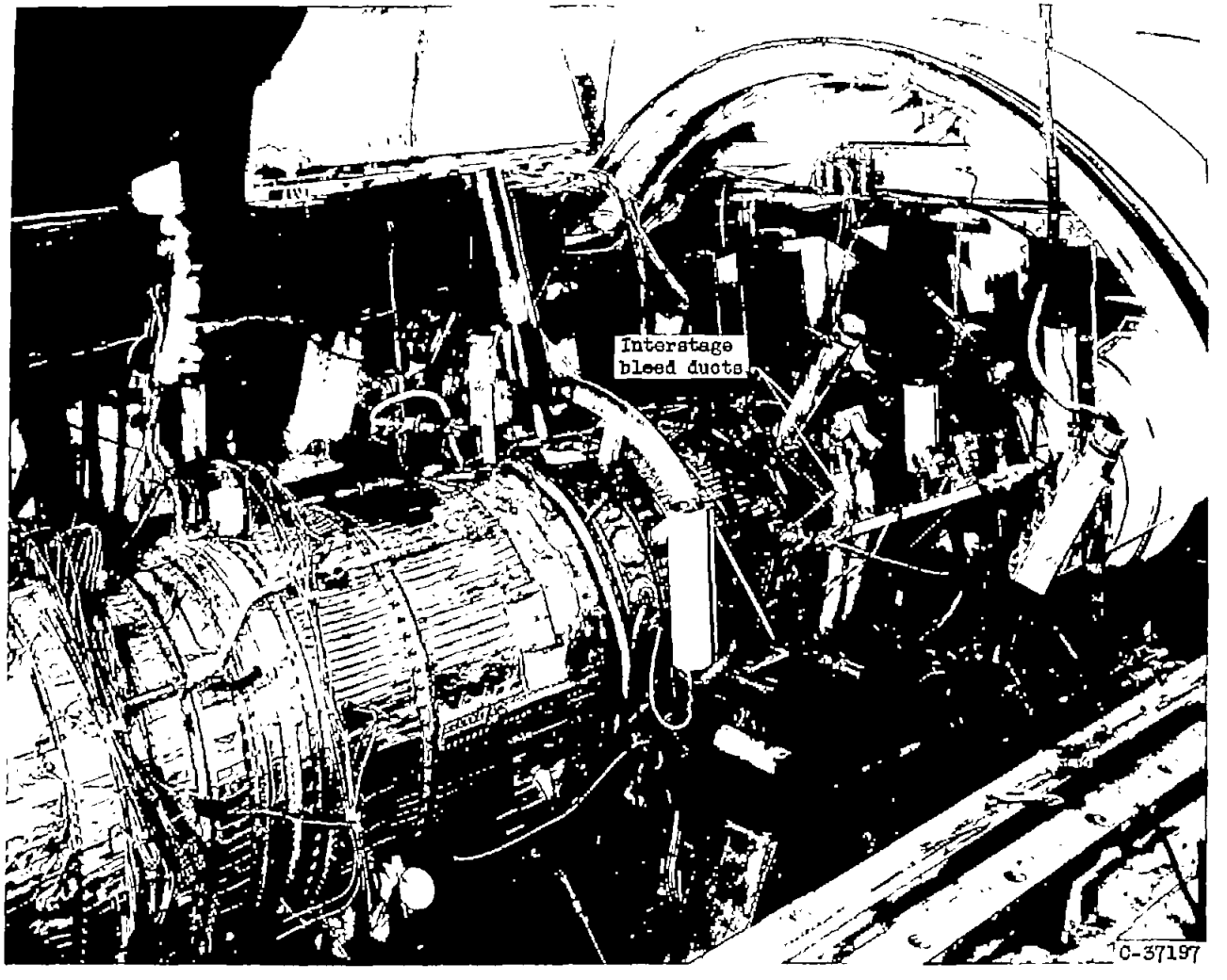

Figure 1. - Turbojet engine installed in altitude test chamber.

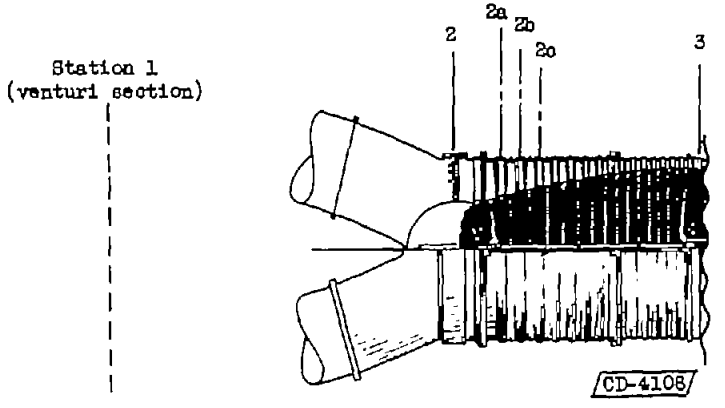

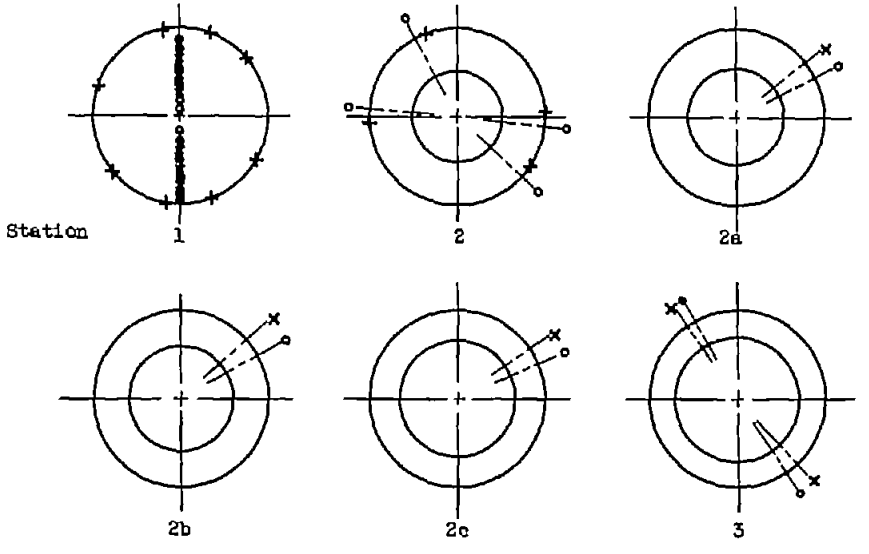

o Total pressure
× Total temperature
+ Static pressure

Probes			
Station	Total pressure	Total temp.	Static pressure
1	12	6	8
2	20	0	4
2a	5	5	0
2b	5	5	0
2c	5	5	0
3	8	8	0

Figure 2. - Instrumentation.

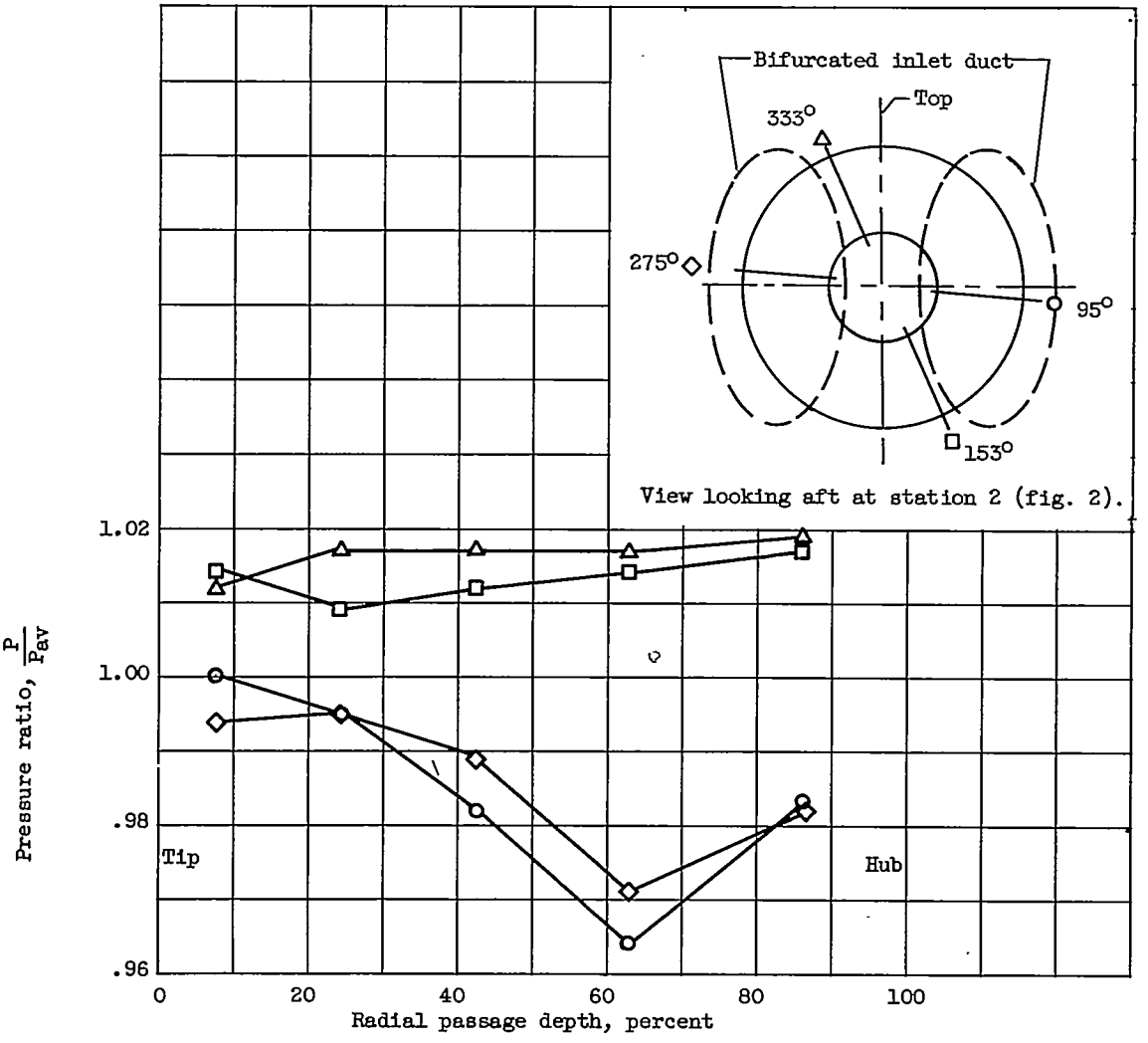

(a) Typical radial pressure profile. Corrected rotor speed, 6411 rpm.

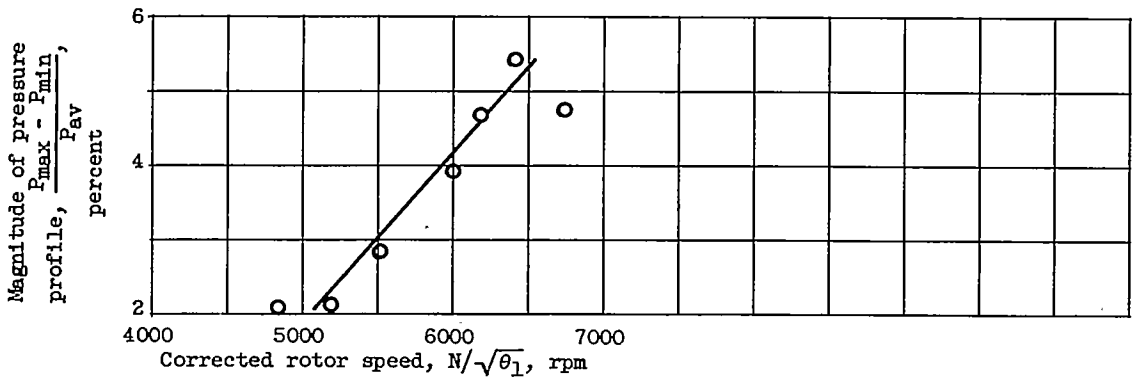

(b) Variation of pressure profile with rotor speed.

Figure 3. - Air distortion at inlet guide vanes.

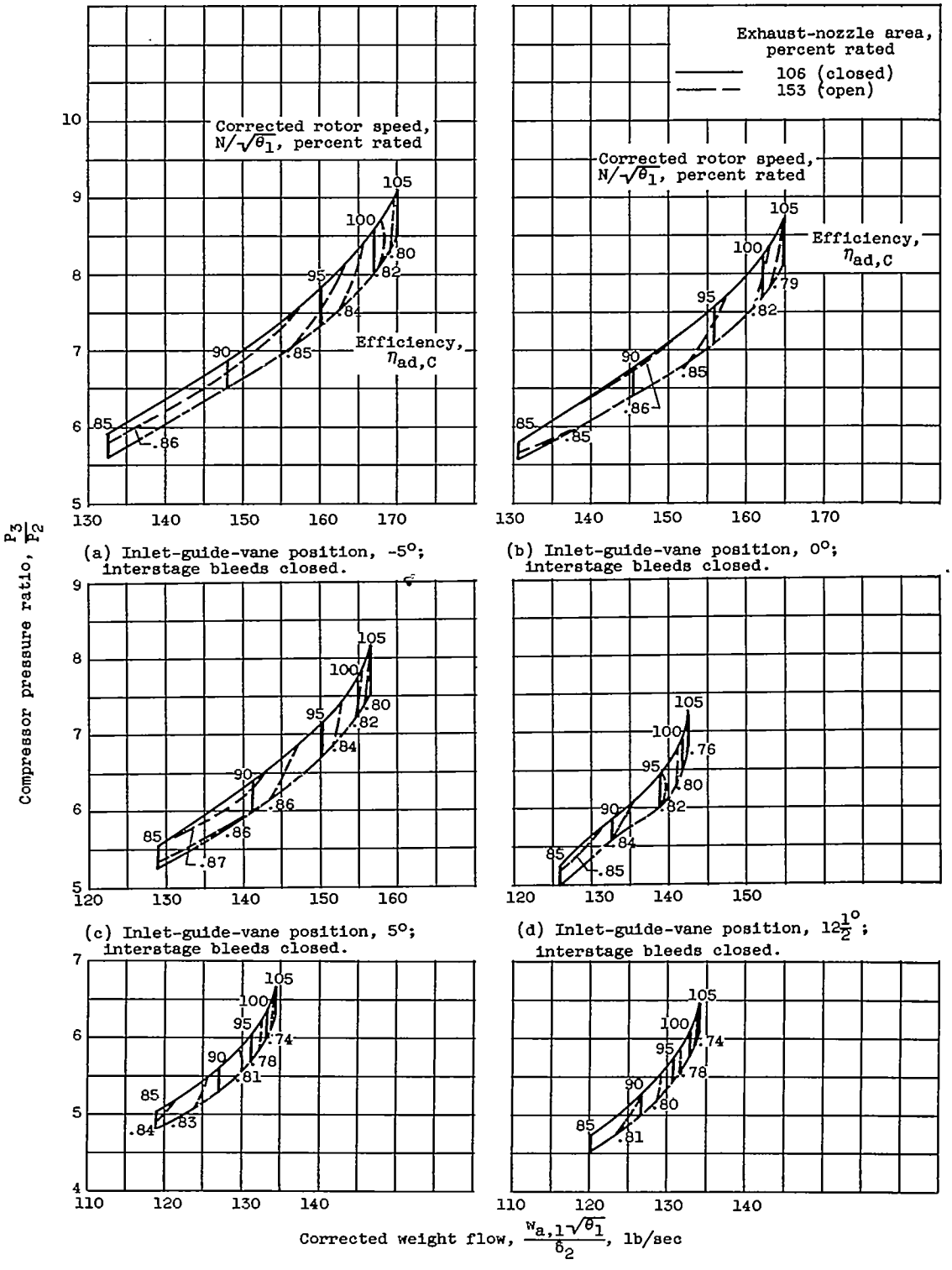

(a) Inlet-guide-vane position, -5°; interstage bleeds closed.

(b) Inlet-guide-vane position, 0°; interstage bleeds closed.

(c) Inlet-guide-vane position, 5°; interstage bleeds closed.

(d) Inlet-guide-vane position, $12\frac{1}{2}$°; interstage bleeds closed.

(e) Inlet-guide-vane position, 20°; interstage bleeds closed.

(f) Inlet-guide-vane position, 20°; interstage bleeds open.

Figure 4. - Over-all compressor performance.

4053

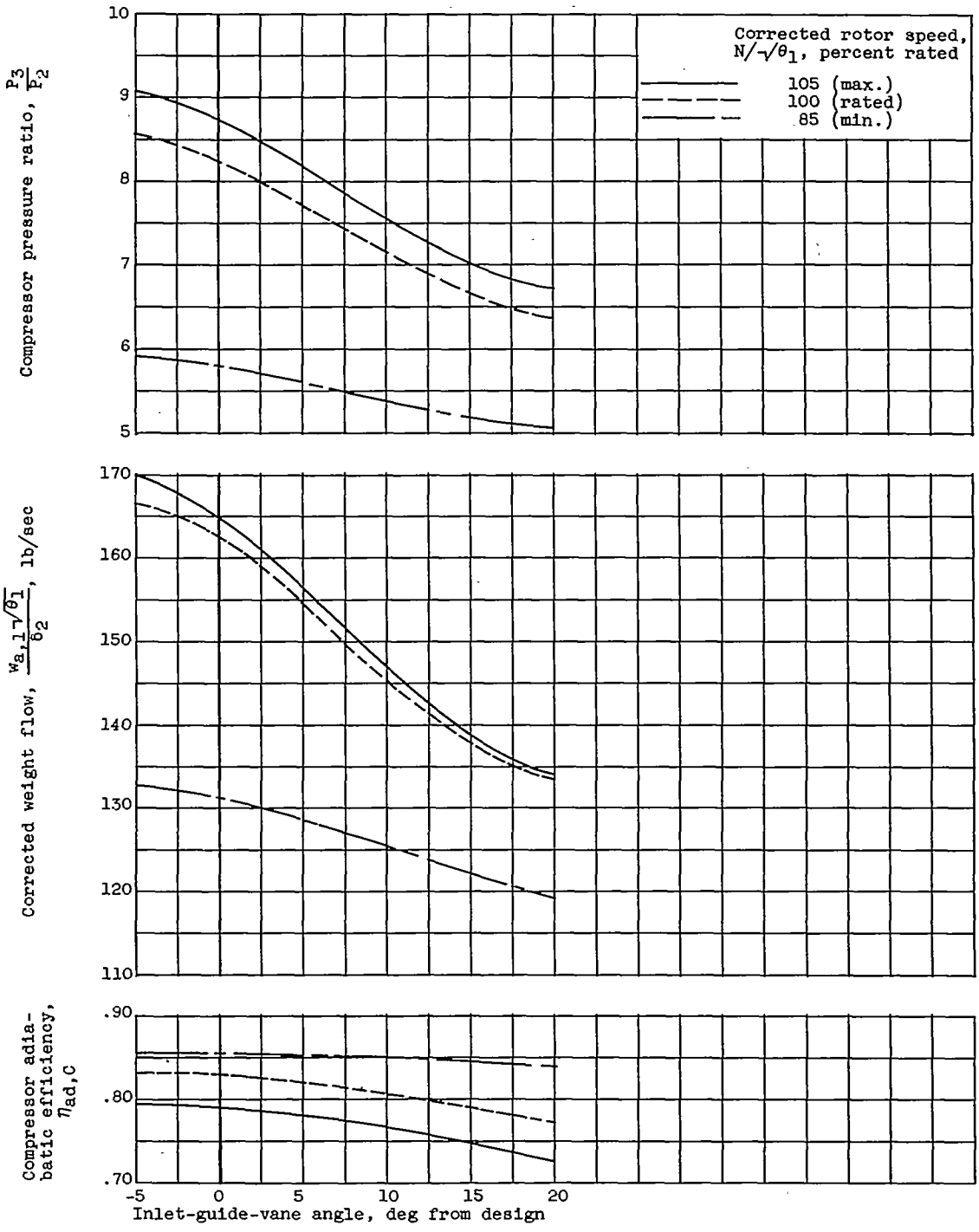

Figure 5. - Effect of inlet-guide-vane turning on compressor performance. Interstage bleeds closed; exhaust-nozzle area, 106 percent of rated.

4053

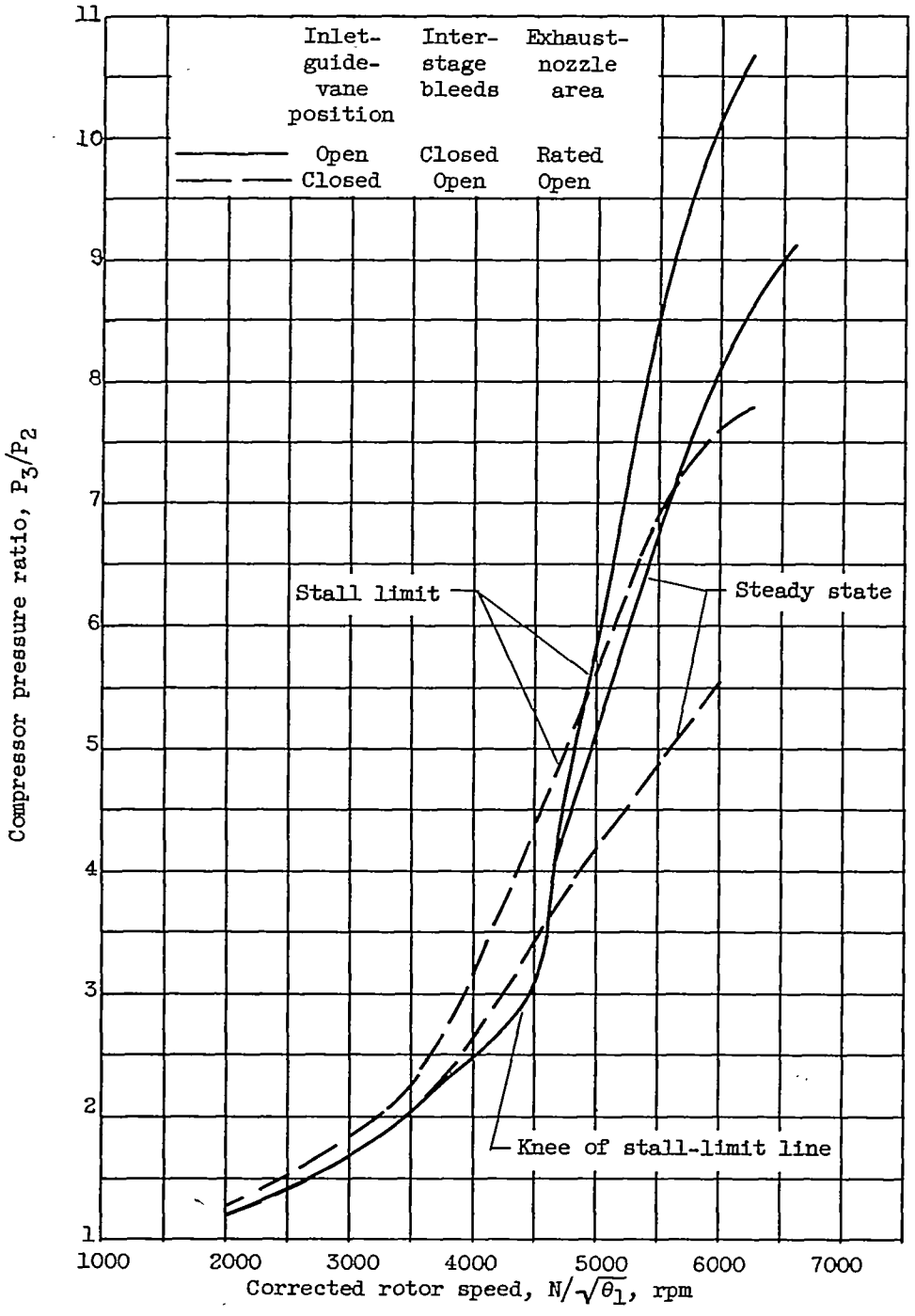

Figure 6. - Operating lines for two modes of operation (ref. 3).

4053

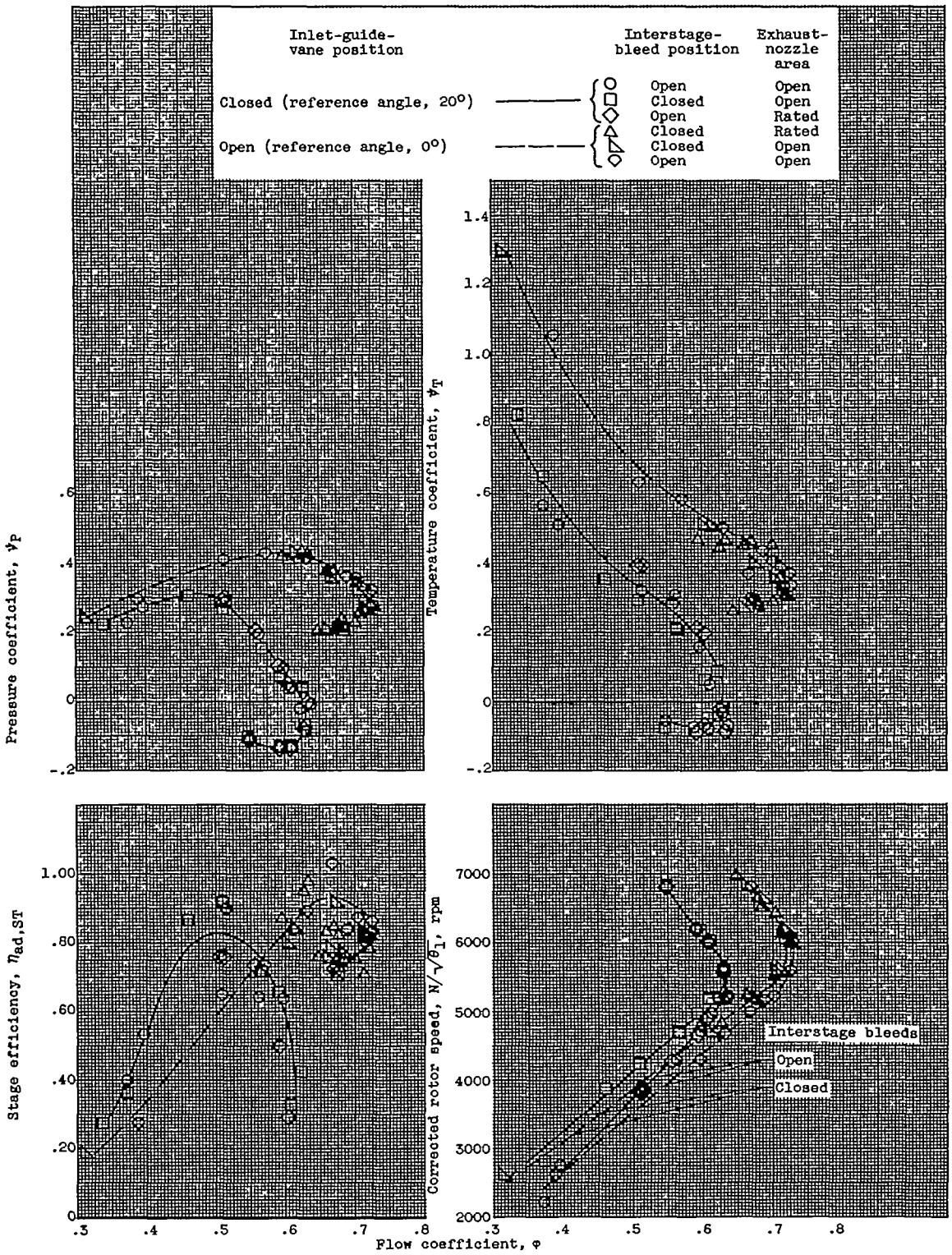

(a) First stage.

Figure 7. - Compressor stage performance.

4053

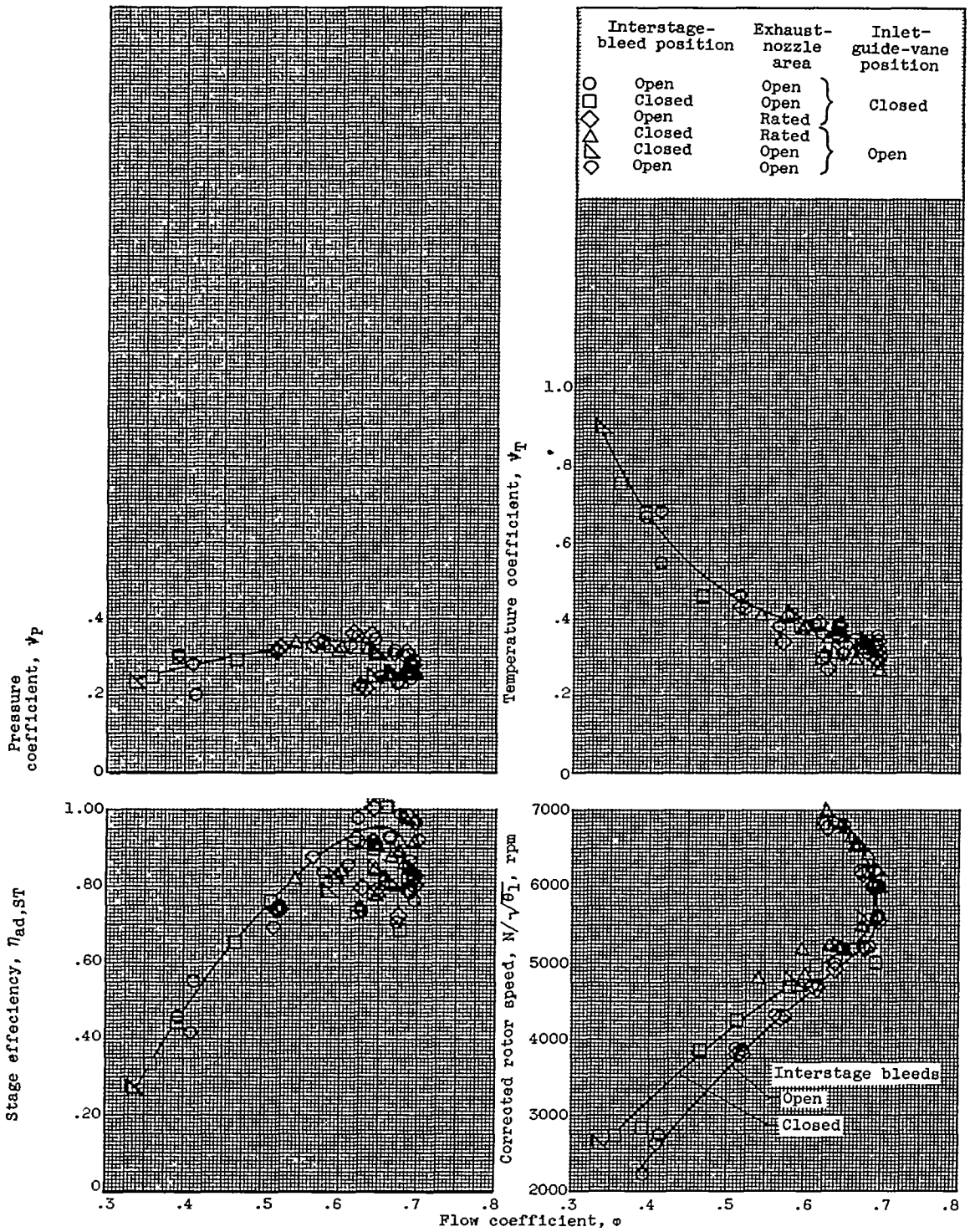

(b) Second stage.

Figure 7. - Continued. Compressor stage performance.

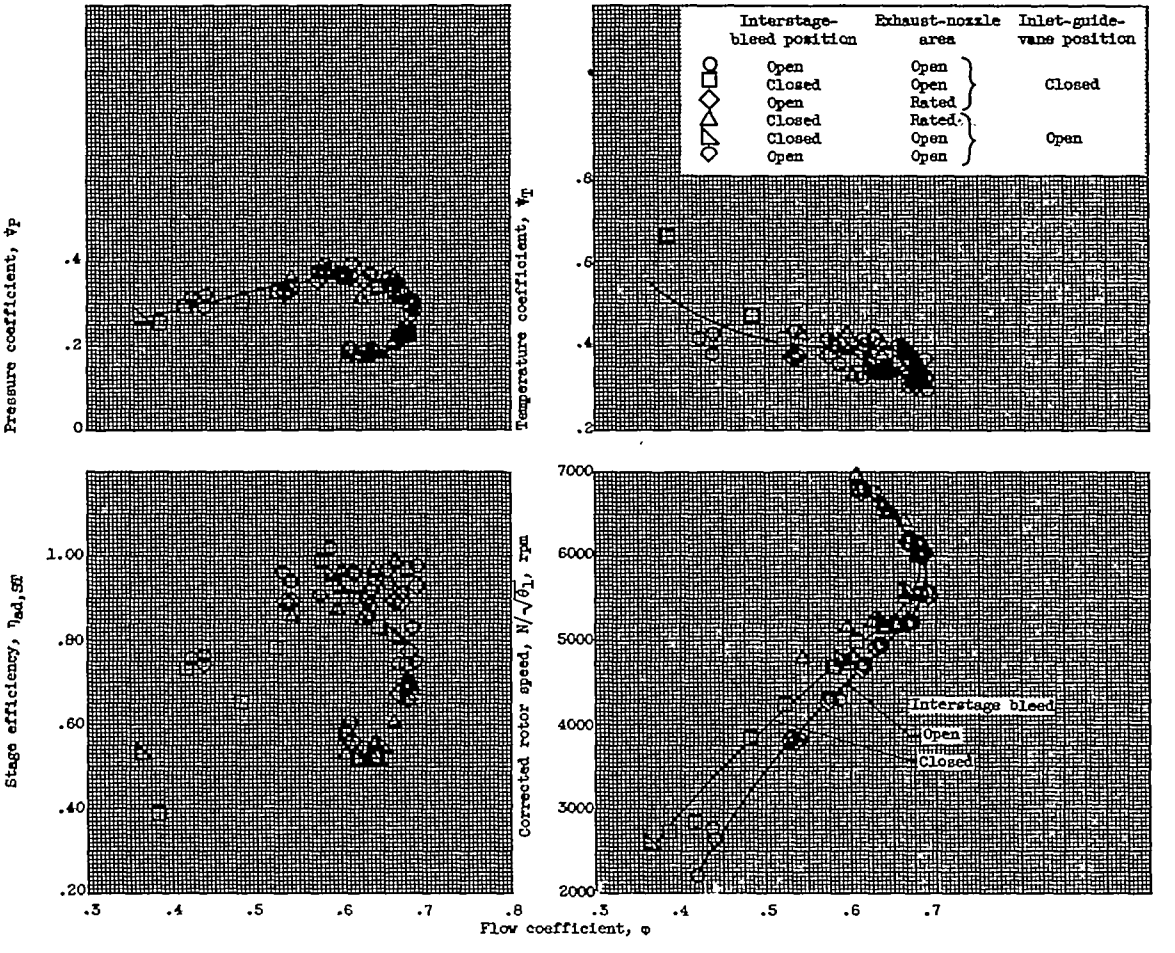

(c) Third stage.

Figure 7. - Concluded. Compressor stage performance.

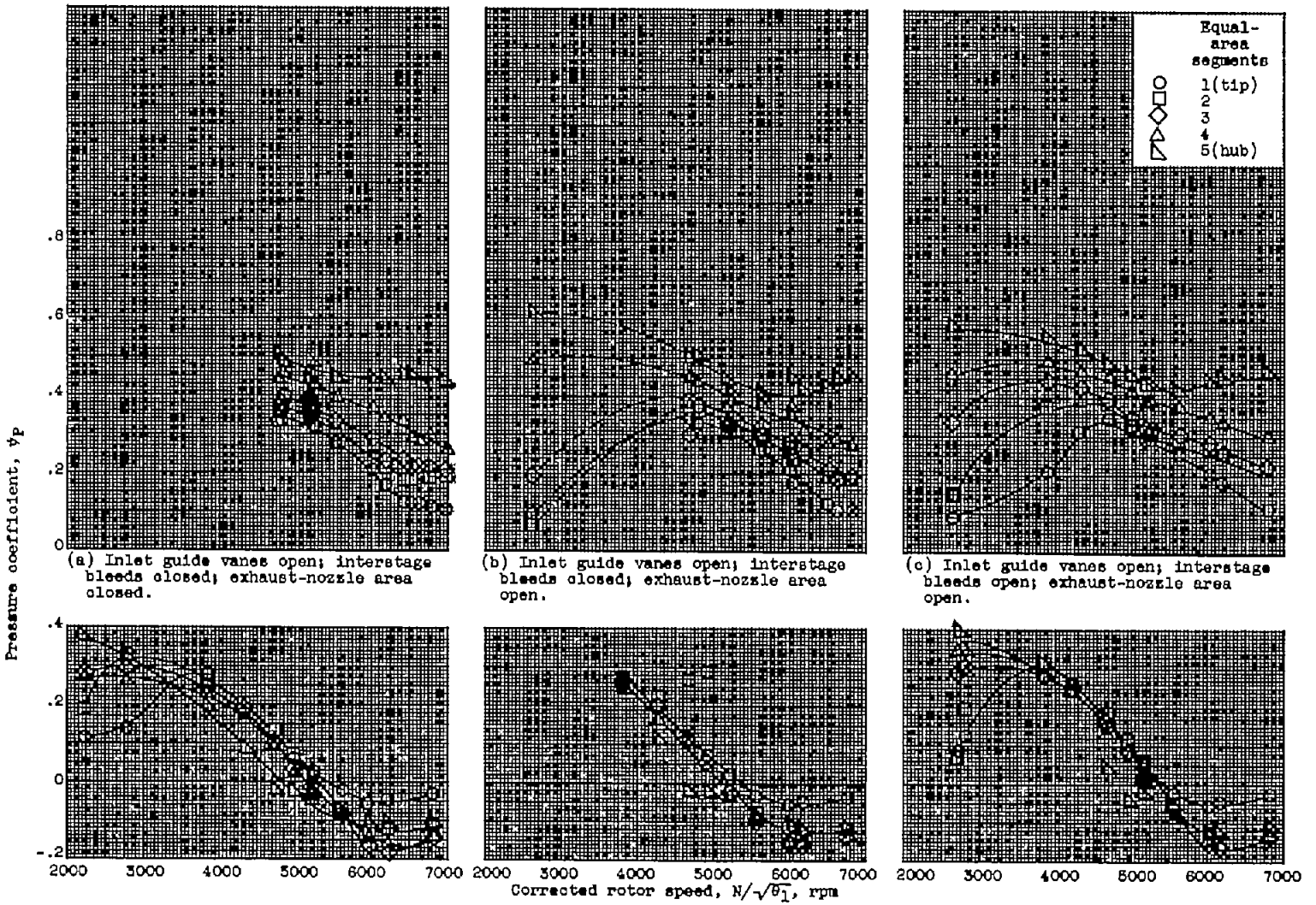

(a) Inlet guide vanes open; interstage bleeds closed; exhaust-nozzle area closed.

(b) Inlet guide vanes open; interstage bleeds closed; exhaust-nozzle area open.

(c) Inlet guide vanes open; interstage bleeds open; exhaust-nozzle area open.

(d) Inlet guide vanes closed; interstage bleeds open; exhaust-nozzle area open.

(e) Inlet guide vanes closed; interstage bleeds open; exhaust-nozzle area closed.

(f) Inlet guide vanes closed; interstage bleeds closed; exhaust-nozzle area open.

Figure 8. - First-stage blade-element performance.