NACA TM 1383

7943

TECH LIBRARY KAFB, NM
0144491

NATIONAL ADVISORY COMMITTEE FOR AERONAUTICS

TECHNICAL MEMORANDUM 1383

FINITE SPAN WINGS IN COMPRESSIBLE FLOW

By E. A. Krasilshchikova

From Scientific Records of the Moscow State University, Vol. 154, Mechanics No. 4, 1951, with appendix condensed from a document "Modern Problems of Mechanics," Govt. Pub. House of Tech. Theor. Literature, (Moscow, Leningrad) 1952.

Washington

September 1956

TECH LIBRARY KAFB, NM
0144491

NATIONAL ADVISORY COMMITTEE FOR AERONAUTICS

TECHNICAL MEMORANDUM 1383

FINITE SPAN WINGS IN COMPRESSIBLE FLOW*

By E. A. Krasilshchikova

This work is devoted to the study of the perturbations of an airstream by the motion of a slender wing at supersonic speeds.

A survey of the work related to the theory of the compressible flow around slender bodies was given in reference 14 by F. I. Frankl and E. A. Karpovich.

The first works in this direction were those of L. Prandtl (ref. 4) and J. Ackeret (ref. 23) in which the simple problem of the steady motion of an infinite span wing was studied. Borbely (ref. 25) considered the two-dimensional problem of the harmonically-oscillating nondeformable wing in supersonic flow by using integrals of special types for solutions.

Schlichting (ref. 24) considered the particular problem of the flow over two-dimensional rectangular and trapezoidal wings. To solve this problem, he applied Prandtl's method of the acceleration potential which he looked for in the form of a potential of a double layer. However, as shown later, Schlichting made an error and arrived at an incorrect result.

In 1943, Busemann (ref. 26) proposed the method of solving the problem of the conical flow over a body by starting from the homogeneous solution of the wave equation. This method was modified by M. I. Gurevich who, in references 11 and 12, solved a series of problems for arrow-shaped and triangular wings when the flow, perturbed by the wing motion, is conical. The work of E. A. Karpovich and F. I. Frankl (ref. 13) was devoted entirely to the problem of the suction forces of arrow-shaped wings.

In 1942, at a hydrodynamics seminar in Moscow University, Prof. L. I. Sedov proposed the problem of the supersonic flow over slender wings of finite span of arbitrary plan form.

In response to this proposal of L. I. Sedov, there appeared in 1946-47 a series of works by Soviet authors on the question of the supersonic flow over wings of finite span.

The first work in this direction was our candidate's dissertation (ref. 5), in which we found the effective solution for a limited class

---

*Scientific Records of the Moscow State University, Vol. 154, Mechanics No. 4, 1951, pp. 181-239.

The appendix represents a condensation made by the translator from a document "Modern Problems of Mechanics," Govt. Pub. House of Tech. Theor. Literature, (Moscow, Leningrad) 1952, pp. 94-112.

of harmonically-oscillating wings. In reference 6 we solved the problem for wing influences by "tip effect." Later works (refs. 15, 16, and 17) were devoted to the same problem.

In reference 6, using an idea of L. I. Sedov as a basis, we reduced the problem of the influence of the tip effect on harmonically-oscillating wings to an integral equation.

The question of the flow over wings of finite span remained open for some time.

At the start of 1947, there appeared works in which different methods were proposed for solving the tip effect problem which would be applicable to any particular wing plan forms. In reference 18, M. D. Khaskind and S. V. Falkovich solved the problem, in the form of a series of special functions, for a harmonically oscillating triangular wing. Later, M. I. Gurevich generalized this method (ref. 19). In reference 20, L. A. Galin reduced the problem of determining the velocity potential of an oscillating wing to the problem of finding the steady-motion velocity potential and gave a solution, in series, for the velocity potential of a rectangular, oscillating wing cambered in the direction of the oncoming stream.

The methods, proposed by different authors, for solving the problem of the flow over wings of finite span do not permit the solution of the problem for any finite-span wing and may only be applied to a limited class of wings.

Parallel developments in this direction were made by the foreign authors Puckett (ref. 21) and Von Kármán (ref. 22) who solved the problem of the steady flow over finite-span, symmetrical wings at zero angle of attack. As is known, such wings produce no "tip effect" and the study of the perturbation of the airstream by their motion presents no mathematical difficulties.

In references 6, 7, and 8 we proposed a method of solving the finite-span wing problem by constructing and solving an integral equation which considered the wing plan form in both steady motion and oscillating harmonically. In reference 9 we generalized the problem to more general forms of unsteady wing motion by the method of retarded source potentials.

Introducing characteristic coordinates we solved the integral equation for wings of arbitrary plan form and represented the solution for steady wing-motion in quadratures and for the harmonically-oscillating wing in a power series of the parameter defining the oscillation frequency.

The present work is a detailed explanation and further development of our papers (refs. 6 to 9) which were published in the Doklady, Akad.

Nauk, USSR. In this work we propose an effective method of solving aerodynamic problems of slender wings in supersonic flow.

All the results and problems explained in this paper were reported by the author in 1947-48 to the USSR Mechanics Institute, V. A. Steklov Mathematics Institute, Moscow University, etc.

In the first part of the work we find a class of solutions of the wave equation, starting from which we obtain the solution to the problem of determining the velocity potential of some wing plan form in unsteady deforming motion. The obtained solution contains the solution of the two-dimensional problem as a special case. In the same part of the work, we solve in quadratures the problem of steady supersonic flow over a wing of arbitrary surface and plan form. The effective solution for wings of small span is similarly given. We obtain formulas determining the pressure on the wing surface in the form of contour integrals and integrals over the wing surface.

The author thanks L. I. Sedov for reading the manuscript.

PART I[1]

1. SETTING UP THE PROBLEM

1. Let us consider the motion of a thin slightly cambered wing at a small angle of attack.

We will consider the basic motion of the wing to consist of an advancing, rectilinear motion at the constant supersonic speed u. Let be superposed on the basic motion, a small additional unsteady motion in which the wing surface may be deformed.

Let us take the system of rectangular rectilinear coordinates $Oxyz$ moving forward with the fundamental wing velocity u. The Ox-axis is directed opposite to the wing motion and we take the x,y-plane such that the z coordinates of points on the wing shall be small (figs. 1 and 2).

We will consider the normal velocity component on both sides of the wing surface to be given by

$$v_n = A_0 + A_1 f[t + \alpha] \tag{1.1}$$

---

[1]Results of Part I, sections 6 and 7 were found by the author in May, 1947 at the Mathematics Institute, Akad. Nauk, USSR.

The first component defines the wing surface

$$A_0 = -u\beta_0 \tag{1.2}$$

where β_0 is the angle of attack of a wing element. The second component defines the additional unsteady motion of the wing. The functions A_0 and A_1 and α are considered given at each point of the wing surface.

We will assume that the fluid motion is irrotational and that there are no external forces.

The velocity potential of the perturbed stream $\varphi(x,y,z,t)$ is represented in the form

$$\varphi(x,y,z,t) = \varphi_0(x,y,z) + \varphi_1(x,y,z,t) \tag{1.3}$$

where the potential φ_0 corresponds to the basic steady motion of the wing and the potential φ_1 corresponds to the additional unsteady motion.

Thus the projections of the velocity v of the fluid particles on the moving $Oxyz$ coordinates are determined by

$$v_x = \frac{\partial\varphi_0}{\partial x} + \frac{\partial\varphi_1}{\partial x}, \qquad v_y = \frac{\partial\varphi_0}{\partial y} + \frac{\partial\varphi_1}{\partial y}, \qquad v_z = \frac{\partial\varphi_0}{\partial z} + \frac{\partial\varphi_1}{\partial z}$$

The functions φ_0 and φ_1 and their derivatives will be considered first-order quantities and second-order quantities will be neglected. With these assumptions it is known that the potential φ_1 satisfies the wave equation which in the moving axes is

$$(a^2 - u^2)\frac{\partial^2\varphi_1}{\partial x^2} + a^2\frac{\partial^2\varphi_1}{\partial y^2} + a^2\frac{\partial^2\varphi_1}{\partial z^2} - \frac{\partial^2\varphi_1}{\partial t^2} - 2u\frac{\partial^2\varphi_1}{\partial t\partial x} = 0 \tag{1.4}$$

and the potential φ_0 satisfies

$$(a^2 - u^2)\frac{\partial^2\varphi_0}{\partial x^2} + a^2\frac{\partial^2\varphi_0}{\partial y^2} + a^2\frac{\partial^2\varphi_0}{\partial z^2} = 0 \tag{1.5}$$

where a is the speed of sound in the undisturbed stream.

A vortex surface, called the vortex sheet, trails from the side of the wing surface opposite to its motion. Just as on the wing surface the velocity potential undergoes a jump discontinuity on this sheet.

We represent the projection of the vortex sheet on the x,y-plane as the semi-infinite strip Σ_1 (fig. 1) extending along the x-axis to infinity from the trailing edge of the wing.

Let us establish the boundary conditions which the functions φ_0 and φ_1 satisfy.

Let us transfer the boundary conditions on the wing surface parallel to the z-axis onto the projection Σ of the wing on the x,y-plane, which is equivalent to neglecting second-order quantities in comparison with first-order ones. Therefore on the basis of equation (1.1) we obtain the streamline condition

$$\frac{\partial\varphi_0}{\partial z} = A_0(x,y), \qquad \frac{\partial\varphi_1}{\partial z} = A_1(x,y)f\left[t + \alpha(x,y)\right] \tag{1.6}$$

which must be fulfilled on both the upper and lower sides of Σ.

The kinematic condition, which expresses the continuity of the normal velocity components of the fluid particles, must be fulfilled on the discontinuous surface of the velocity potential and on the vortex sheet.

We transfer the condition on the vortex sheet parallel to the z-axis onto its projection Σ_1 on the x,y-plane which is again neglecting second-order quantities. Therefore we have the conditions

$$\left[\frac{\partial\varphi_0}{\partial z}\right]_{z=+0} = \left[\frac{\partial\varphi_0}{\partial z}\right]_{z=-0}, \qquad \left[\frac{\partial\varphi_1}{\partial z}\right]_{z=+0} = \left[\frac{\partial\varphi_1}{\partial z}\right]_{z=-0} \tag{1.7}$$

to be fulfilled on Σ_1.

Furthermore, the dynamic condition which the potentials φ_0 and φ_1 satisfy must be fulfilled on the vortex sheet.

Since the pressure remains continuous on crossing from one side of the vortex sheet to the other, then from the Lagrange integral

$$P = -\frac{\partial\varphi}{\partial t} - u\frac{\partial\varphi}{\partial x} - \frac{1}{2}\left\{\left(\frac{\partial\varphi}{\partial x}\right)^2 + \left(\frac{\partial\varphi}{\partial y}\right)^2 + \left(\frac{\partial\varphi}{\partial z}\right)^2\right\} + \Gamma(t), \quad \left[P = \int\frac{dp}{\rho}\right]$$

Keeping equation (1.3) in mind and neglecting second-order quantities, we obtain

$$\left[\frac{\partial\varphi_0}{\partial x}\right]_{z=+0} = \left[\frac{\partial\varphi_0}{\partial x}\right]_{z=-0}, \qquad \left[\frac{\partial\varphi_1}{\partial t} + u\frac{\partial\varphi_1}{\partial x}\right]_{z=+0} = \left[\frac{\partial\varphi_1}{\partial t} + u\frac{\partial\varphi_1}{\partial x}\right]_{z=-0} \tag{1.8}$$

which must also be fulfilled on Σ_1.

After boundary conditions (1.6) and (1.7) are established, we correctly consider that, to the same degree of approximation, the surface of discontinuity of the velocity potential - the vortex surface - lies entirely within the x,y-plane. Therefore, the functions φ_0 and φ_1 are odd functions in z

$$\varphi_0(x,y,-z) = -\varphi_0(x,y,z), \qquad \varphi_1(x,y,-z,t) = -\varphi_1(x,y,z,t) \tag{1.9}$$

Combining equations (1.8) and (1.9) we conclude that the functions φ_0 and φ_1 satisfy the respective conditions

$$\frac{\partial\varphi_0}{\partial x} = 0, \qquad \frac{\partial\varphi_1}{\partial t} + u\frac{\partial\varphi_1}{\partial x} = 0 \text{ on } \Sigma_1 \tag{1.10}$$

Since the motion of the wing is supersonic, the medium is disturbed only in the region bounded by the respective disturbance waves representable by a surface enveloping the characteristic cones with vertices at points of the wing contour. Ahead of this surface - in front of the wing - the medium is at rest, therefore, the velocity potential is a constant which we assume to be zero. Hence we have the condition on the disturbance wave

$$\varphi_0(x,y,z) = 0, \qquad \varphi_1(x,y,z,t) = 0 \tag{1.11}$$

The potentials φ_0 and φ_1 are continuous functions everywhere outside the two dimensional region $\Sigma + \Sigma_1$ and, as was established, are odd in z, therefore, in the whole x,y-plane outside of the region $\Sigma + \Sigma_1$ where the medium is perturbed, the following conditions are satisfied:

$$\varphi_0(x,y,0) = 0, \qquad \varphi_1(x,y,0,t) = 0 \tag{1.12}$$

The region where equation (1.12) is satisfied is denoted in figure 1 by Σ_2 and Σ_2'.

Thus the considered hydrodynamic problem is reduced to the following two boundary problems:

I. To find the function $\varphi_1(x,y,z,t)$ which satisfies equation (1.4) and boundary conditions (1.6), (1.10), (1.11), and (1.12).

II. To find the function $\varphi_0(x,y,z)$ which satisfies equation (1.5) and boundary conditions (1.6), (1.10), (1.11), and (1.12).

Since the functions φ_0 and φ_1 are antisymmetric functions relative to the $z = 0$ plane, it is sufficient to solve the problem for the upper half plane. From the solution of boundary problem I it is possible to obtain the solution of II if the function f in the first be considered a constant equal to unity, and A_0 replaces A_1.

2. VELOCITY POTENTIAL OF A MOVING SOURCE WITH VARIABLE INTENSITY

1. Let us construct a solution of equation (1.4) as the retarded potential of a source moving in a straight line with the constant velocity u and having an intensity which varies with time according to $f_1(t)$. Let us consider the infinite line along which, at each point from left to right, sources with velocity u start to function one after the other with the variable intensity $q = f_0(t - t_1)f_1(t)$. The law of variation of the function f_0 is the same for all the sources if the initial moment of each source is considered to be the moment when it came into being.[2]

The function f_1 has the same value for all the sources at each instant. Let a source at an arbitrary point of the $O'x'$-axis be acting at time t_1 (fig. 3). The retarded potential of the velocity at the point M as a result of such a system of sources is represented in the fixed coordinates by

$$\Phi_1^*(x',y',z',t) = A\int_{t_1'}^{t_1''} \frac{f_0\left[t - t_1 - \frac{r}{a}\right]f_1\left[t - \frac{r}{a}\right]}{r}\,dt_1$$

$$r = \sqrt{(x' + ut)^2 + y'^2 + z'^2} \tag{2.1}$$

[2]Prandtl (ref. 3) considered an analogous problem with $q = f_0(t - t_1)$.

where A is a constant with the dimensions of a velocity. The limits of integration t_1' and t_1'' take into account those sources which affect M at time t. The origin of the fixed coordinates O' is placed at the point at which the source started at $t = 0$.

Introducing the new variable of integration $\tau = a(t - t_1) - r$ and transforming to the coordinate system $x = x' + ut$, $y = y'$, $z = z'$ which is moving forward in a straight line with the velocity u, we transform equation (2.1) into

$$\Phi^*(x,y,z,t) = \frac{A}{a}\int_0^{\tau_1} \frac{f_0\left[\frac{\tau}{a}\right] f_1\left\{t - \frac{u\left[x - (u/a)\tau\right]}{u^2 - a^2} \mp \frac{a^2}{u^2 - a^2}\sqrt{\left(x - \frac{u}{a}\tau\right)^2 - \left(\frac{u^2}{a^2} - 1\right)\left(y^2 + z^2\right)}\right\} d\tau}{\sqrt{\left(x - \frac{u}{a}\tau\right)^2 - \left(\frac{u^2}{a^2} - 1\right)\left(y^2 + z^2\right)}} \tag{2.2}$$

If it is assumed that $u > a$ then the velocity potential at $M(x,y,z)$ is the sum of the expressions (2.2), with the minus sign in front of the radical taking into account the effect of the sources in the strip AC on M and with the plus sign taking into account the sources on CB. The smaller root of the radicand is taken as the upper limit of integration τ_1. It is easy to see that in this case both roots are real, positive quantities (fig. 3).

On the basis of expression (2.2) we now construct a velocity potential at M from the sources moving with speed $u > a$ which have an intensity which varies with time as $f_1(t)$. The derivation remains valid if the additive constant α_1 is added to the argument t of the function f_1. Putting the sources at the origin, we find the velocity potential from equation (2.2) by considering the interval of integration from 0 to $\bar{\tau}_1$ to be vanishingly small. Then, neglecting the term $\left(\frac{u}{a}\right)\tau$ and putting $\frac{A}{a}\int_0^{\tau_1} f_0\left(\frac{\tau}{a}\right)d\tau = C$ where C is a constant, we obtain the desired solution for equation (1.4) in the general form

$$\varphi^*(x,y,z,t) = C\,\frac{f_1\left\{t + \alpha_1 - \frac{ux}{u^2 - a^2} - \frac{a}{u^2 - a^2}\sqrt{x^2 - \left(\frac{u^2}{a^2} - 1\right)\left(y^2 + z^2\right)}\right\}}{\sqrt{x^2 - \left(\frac{u^2}{a^2} - 1\right)\left(y^2 + z^2\right)}} + C\,\frac{f_1\left\{t + \alpha_1 - \frac{ux}{u^2 - a^2} + \frac{a}{u^2 - a^2}\sqrt{x^2 - \left(\frac{u^2}{a^2} - 1\right)\left(y^2 + z^2\right)}\right\}}{\sqrt{x^2 - \left(\frac{u^2}{a^2} - 1\right)\left(y^2 + z^2\right)}} \tag{2.3}$$

Let us note that each component of the arbitrary function f_1 as well as the constant C and α_1 in equation (2.3) is separately also a solution of equation (1.4).

In equation (2.3) putting $\alpha_1 = 0$ and the velocity of motion of the source $u = 0$, we arrive at the well-known solution for a spherical wave.

If the velocity of motion of the source is $u < a$ then to obtain the retarded potential of a moving source the right side of equation (2.3) must be limited to the first component.

Considering the function f_1 in equation (2.3) to be constant, we arrive at the Prandtl (ref. 3) solution for the retarded potential of a moving source of constant intensity

$$\varphi_0{}^* = \frac{C_1}{\sqrt{x^2 - \left(\frac{u^2}{a^2} - 1\right)\left(y^2 + z^2\right)}}$$

2. It is possible to obtain, by the same method, the velocity potential of a source with the variable intensity $f_1(t)$ moving arbitrarily.

For example, in the case of rectilinear motion of the source when the motion is given by $X = F_1(t)$, $Y = 0$, $Z = 0$ and when $\left|\frac{dF_1(t)}{dt}\right| > a$, that is, the motion of the source is supersonic, the velocity potential of the source at the origin of a coordinate system moving with the source is

$$\varphi^{**}(x,y,z,t) = \frac{Cf_1(t_1)}{\sqrt{\left[x + F_1(t) - F_1(t_1)\right]^2 + y^2 + z^2} - \left[x + F_1(t) - F_1(t)\right]\frac{dF_1(t_1)}{dt_1}} +$$

$$\frac{Cf_1(t_1{}^*)}{\sqrt{\left[x + F_1(t) - F_1(t_1{}^*)\right]^2 + y^2 + z^2} - \left[x + F_1(t) - F_1(t_1{}^*)\right]\frac{dF_1(t_1{}^*)}{dt_1{}^*}} \tag{2.4}$$

where the parameters $t_1 = t_1(x,y,z,t)$ and $t_1{}^* = t_1{}^*(x,y,z,t)$ are real roots of

$$a(t - t_1) - \sqrt{\left[x + F_1(t) - F_1(t_1)\right]^2 + y^2 + z^2} = 0 \tag{2.5}$$

If $\left[dF_1(t)/dt\right] < a$, i.e., the source velocity is subsonic, then to obtain the velocity potential one must be limited to the one component in equation (2.4) which corresponds to the smaller of the values of the parameters t_1 and $t_1{}^*$.

The function expressed by equation (2.4) satisfies the linear equation with variable coefficients

$$\left\{\left[\frac{dF_1(t)}{dt}\right]^2\right\}\frac{\partial^2\varphi}{\partial x^2} + a^2\frac{\partial^2\varphi}{\partial y^2} + a^2\frac{\partial^2\varphi}{\partial z^2} - \frac{\partial^2\varphi}{\partial t^2} - 2\frac{dF_1(t)}{dt}\frac{\partial^2\varphi}{\partial x\partial t} - \frac{d^2F_1(t)}{dt^2}\frac{\partial\varphi}{\partial x} = 0 \tag{2.6}$$

If the source moves with constant acceleration as $F_1(t) = -ut - \frac{bt^2}{2}$ (where b is a constant) then equation (2.5) is an algebraic equation of the fourth degree in t_1 with two real roots.

Formula (2.4) contains the Lienard-Weigert (ref. 27) formula as a special case when the source intensity is constant.

3. DERIVATION OF THE BASIC VELOCITY POTENTIAL FORMULA

1. We apply a solution of the form (2.3) of the wave equation (1.4) to the above-mentioned boundary problem I.

At each point of the x,y-plane let us place sources with the potential φ^*. Hence, we will consider C and α_1 in equation (2.3) functions of points of the x,y-plane and we will replace α_1 by α and f_1 by f.

As a consequence of the linearity of equation (1.4), its solution is a function φ_1 expressed by

$$\varphi_1(x,y,z,t) = \iint_{S(x,y,z)} C(\xi,\eta) \times \frac{f\left\{t + \alpha(\xi,\eta) - \frac{u(x-\xi)}{u^2-a^2} - \frac{a}{u^2-a^2}\sqrt{(x-\xi)^2 - k^2(y-\eta)^2 - k^2z^2}\right\}}{\sqrt{(x-\xi)^2 - k^2(y-\eta)^2 - k^2z^2}}\,d\eta d\xi +$$

$$\iint_{S(x,y,z)} C(\xi,\eta) \times \frac{f\left\{t + \alpha(\xi,\eta) - \frac{u(x-\xi)}{u^2-a^2} + \frac{a}{u^2-a^2}\sqrt{(x-\xi)^2 - k^2(y-\eta)^2 - k^2z^2}\right\}}{\sqrt{(x-\xi)^2 - k^2(y-\eta)^2 - k^2z^2}}\,d\eta d\xi \tag{3.1}$$

where $k = \sqrt{\frac{u^2}{a^2} - 1}$.

The region of integration $S(x,y,z)$ is that part of the x,y-plane which lies within the characteristic fore-cone of equation (1.4) from the point with coordinates x,y,z (fig. 4).

The solution of equation (3.1) will give the velocity potential arising from the additional motion of the wing if $C(x,y)$ is determined from the boundary conditions of the problem on the x,y-plane.

Let us introduce the new variable of integration θ into equation (3.1) in place of η

$$\eta = y - \frac{1}{k}\sqrt{(x - \xi)^2 - k^2z^2}\cos\theta \tag{3.3}$$

Then equation (3.1) becomes

$$\begin{aligned}
\varphi_1(x,y,z,t) = &\iint_{S(x,y,z)} C\left\{\xi, y - \frac{1}{k}\sqrt{(x - \xi)^2 - k^2z^2}\cos\theta\right\} \times \\
&f\left\{t + \alpha\left[\xi, y - \frac{1}{k}\sqrt{(x - \xi)^2 - k^2z^2}\cos\theta\right] - \right. \\
&\left.\frac{u(x - \xi)}{u^2 - a^2} - \frac{a}{u^2 - a^2}\sqrt{(x - \xi)^2 - k^2z^2}\sin\theta\right\} d\theta d\xi + \\
&\iint_{S(x,y,z)} C\left\{\xi, y - \frac{1}{k}\sqrt{(x - \xi)^2 - k^2z^2}\cos\theta\right\} \times \\
&f\left\{t + \alpha\left[\xi, y - \frac{1}{k}\sqrt{(x - \xi)^2 - k^2z^2}\cos\theta\right] - \right. \\
&\left.\frac{u(x - \xi)}{u^2 - a^2} + \frac{a}{u^2 - a^2}\sqrt{(x - \xi)^2 - k^2z^2}\sin\theta\right\} d\theta d\xi
\end{aligned} \tag{3.4}$$

Let us note that for any point $M(x,y,z)$ of space it is possible to isolate from the region $S(x,y,z)$ a region S' in which the variable of integration has the limits

$$x - kz \leqq \xi \leqq C', \qquad 0 \leqq \theta \leqq \pi$$

or

$$\eta_2 = y - \frac{1}{k}\sqrt{(x - \xi)^2 - k^2z^2} \leqq \eta \leqq y + \frac{1}{k}\sqrt{(x - \xi)^2 - k^2z^2} = \eta_1$$

where C' is a constant satisfying the inequality $C' < x - kz$. In the remaining region $S - S'$ the limits of integration either do not depend on z or depend on z only in the combination kz^2.

Differentiating equation (3.4) with respect to z we find the relation between $C(x,y)$ and $\alpha(x,y)$ and the normal derivative of the velocity potential $\partial\varphi_1/\partial z$ at any point of the x,y-plane

$$C(x,y) = -\frac{1}{2\pi}\left\{f\left[t + \alpha(x,y)\right]\right\}^{-1}\left[\frac{\partial\varphi_1}{\partial z}\right]_{z=0} \tag{3.5}$$

Comparing equation (3.5) with equation (1.6) we conclude that on the wing

$$C(x,y) = -\frac{1}{2\pi}A_1(x,y) \tag{3.6}$$

i.e., the function $C(x,y)$ is given.

Therefore, the velocity potential φ_1 may be computed from equation (3.1) by taking equation (3.6) into account for those points $M(x,y,z)$ of space for which the region of integration $S(x,y,z)$ does not extend beyond the limits of the wing.

If the leading and trailing edges of the wing are given by $x = \psi(y)$ and $x = \chi_1(y)$, respectively, and if, therefore, ψ and χ_1 satisfy

$$\left|\frac{d\psi(y)}{dy}\right| \leqq \cot \alpha^* \tag{3.7}$$

$$\left|\frac{dx_1(y)}{dy}\right| \leqq \cot \alpha^* \tag{3.8}$$

(where α^* is the semi-vertex angle of the characteristic cone) on the leading and trailing edges of the wing, respectively, then in particular, equation (3.1) yields the effective solution of the problem of finding the velocity potential φ_1 everywhere on the wing surface because in this case the region of integration S does not extend beyond the wing for any point $M(x,y,0)$ on it (fig. 5).

Also, in particular, equation (3.1) gives a solution of the plane problem if C and α are considered as functions of one variable - $C = C(x)$ and $\alpha = \alpha(x)$ - and the variables of integration in the region S are considered to vary between

$$0 \leqq \xi \leqq x - kz$$

$$\eta_2 = y - \frac{1}{k}\sqrt{(x - \xi)^2 - k^2z^2} \leqq \eta \leqq y + \frac{1}{k}\sqrt{(x - \xi)^2 - k^2z^2} = \eta_1 \tag{3.9}$$

where η_1 and η_2 are as defined previously.

Considering f in equation (3.1) a constant and taking into account equation (3.5), we obtain the fundamental formula for the velocity potential φ_0 specified by the basic steady motion of the wing

$$\varphi_0\,(x,y,z) = -\frac{1}{\pi}\iint_{S(x,y,z)}\left[\frac{\partial\varphi_0}{\partial z}\right]_{z=0}\frac{d\eta d\xi}{\sqrt{(x - \xi)^2 - k^2(y - \eta)^2 - k^2z^2}} \tag{3.10}$$

Formula (3.10) contains, as special cases, the results of Prandtl (ref. 3), Ackeret (ref. 23), Schlichting (ref. 4) when the wing surface is a plane and when the leading edge is a straight line perpendicular to the free stream.

4. HARMONIC OSCILLATIONS OF A WING

1. Let us turn to the case when the additional motions of the wing are harmonic oscillations, i.e., on the wing equation (1.6) is given as

$$\frac{\partial\varphi_1}{\partial z} = \text{R.P. } A_1(x,y)e^{i\left[\omega t + \alpha(x,y)\right]} = \text{R.P. } A_2(x,y)e^{i\omega t} \tag{4.1}$$

where $A_2(x,y)$ defines the amplitude and initial phase of the oscillations. Using the obvious relation $e^{i\theta} + e^{-i\theta} = 2\cos\theta$ and equation (3.5), the basic formula for the velocity potential (3.1) is represented as

$$\varphi_1(x,y,z,t) = -\frac{1}{\pi}e^{\beta x}\iint_{S(x,y,z)}\left[\frac{\partial\varphi_1}{\partial z}\right]_{z=0}\frac{e^{-\beta\xi}\cos\left[\lambda\sqrt{(x-\xi)^2 - k^2(y-\eta)^2 - k^2z^2}\right]}{\sqrt{(x-\xi)^2 - k^2(y-\eta)^2 - k^2z^2}}\,d\eta\,d\xi \tag{4.2}$$

where

$$\lambda = \frac{\omega a}{u^2 - a^2}$$

and

$$\beta = -\frac{i\omega u}{u^2 - a^2}$$

Keeping the second inequality of equation (3.9) in mind, let us compute the inner integral after which we obtain a solution of the problem for a wing of infinite span

$$\varphi_1(x,z,t) = -\frac{1}{k}e^{\beta x}\int_0^{x-kz}\left\{\frac{\partial\varphi_1}{\partial z}\right\}_{z=0}e^{-\beta\xi}I_0\left[\lambda\sqrt{(x-\xi)^2 - k^2z^2}\right]d\xi \tag{4.3}$$

where I_0 is the Bessel function of zero order.

By means of equation (4.3) the velocity potential may be computed at those points of the x,z-plane for which the interval of integration on the Ox-axis does not extend beyond the wing, i.e., at those points of the

x,z-plane not affected by the vortices trailing from the wing because the function $\frac{\partial\varphi_1}{\partial z}$ is given only on the wing. In order to compute the velocity potential at any point of the x,z-plane by equation (4.3) it is necessary to determine $\frac{\partial\varphi_1}{\partial z}$, using equation (1.8), everywhere on the Ox-axis outside the wing.

Let us express, by equation (4.3), the velocity potential $\bar{\varphi}_1$ for any points lying on the Ox-axis outside the wing, which, according to equation (1.8), equals on the Ox-axis everywhere outside the wing

$$\bar{\varphi}_1(x,t) = \text{R.P. } \varphi_1(l)e^{\nu(x-l)} \tag{4.4}$$

where

$$\nu = -\frac{i\omega}{u}$$

and l is the abscissa of the trailing edge. Then we obtain the integral equation

$$\int_l^x \left\{\frac{\partial\varphi_1}{\partial z}\right\}_{z=0} e^{-\beta\xi} I_0\left\{\lambda(x - \xi)\right\} d\xi = -k\bar{\varphi}_1 e^{-\beta x} - \int_0^l \left\{\frac{\partial\varphi_1}{\partial z}\right\}_{z=0} e^{-\beta\xi} I_0\left\{\lambda(x - \xi)\right\} d\xi \tag{4.5}$$

which $\frac{\partial\varphi_1}{\partial z}$ satisfies on the Ox-axis outside the wing. In reference 5, we solved such an integral equation. The inversion of equation (4.5) is

$$\left\{\frac{\partial\varphi_1}{\partial z}\right\}_{z=0} e^{-\beta x} = \frac{dF^*(x)}{dx} + \lambda\int_l^x F^*(\xi) I_1\left\{\lambda(x - \xi)\right\} \frac{d\xi}{x - \xi} \tag{4.6}$$

where F^* denotes the right side of equation (4.5), the known function, and where I_1 is the Bessel function of first order.

Therefore, keeping equation (4.6) in mind, we can calculate the velocity potential at any point of the x,z-plane by equation (4.3).

The problem considered in this section was solved and explained in reference 5 from another point of view.

5. INFLUENCE OF THE TIP EFFECT

1. To calculate the velocity potential according to equation (3.1) and also through equation (3.10) or (4.2) for those points $M(x,y,z)$ of space for which the region of integration S extends outside the limits of the wing surface, it is necessary to determine the normal velocity component $\frac{\partial\varphi_1}{\partial z}$ everywhere in the region of integration S from the boundary conditions of the problem on the $z = 0$ plane.

Let us consider the case when the region of integration S intersects the wing surface and the region Σ_3 lying outside the wing and outside the region of the vortex system from the wing. Region Σ_3 (fig. 6) is part of the region Σ_2 defined above. That is, let us consider the case when the wing tips - the arcs ED and E'D' of the wing contour - act on the point $M(x,y,z)$ or so to speak, the influence of the "tip effect" and not the influence of the vortex sheet trailing from the wing surface.

The point E on the leading edge is defined so that condition (3.7) is fulfilled to its left and violated to its right. The point E' is similarly defined. The points D and D' are, respectively, the rightmost and leftmost points on the wing contour as shown in figure 6.

Let us construct the integral equation for $C(x,y)$, connected to $\frac{\partial\varphi_1}{\partial z}$ by relation (3.5), in Σ_3.

Let us select the velocity potential φ_1 at any point $N(x,y,0)$ lying in Σ_3 by means of equation (3.1), equal to zero everywhere in Σ_2 according to equation (1.12). The region of integration $S(x,y,0)$ is divided into two parts, as shown in figure 7; the region $s(x,y)$ is that part of the wing falling in the Mach fore-cone from $N(x,y,0)$, and the region $\sigma(x,y)$ is that part of Σ_3 lying in the same fore-cone. According to equation (3.6) $C(x,y)$ is given in s. In σ, $C(x,y)$ is unknown. We therefore arrive at the integral equation which $C(x,y)$ satisfies in Σ_3.

$$\iint_{\sigma(x,y)} C(\xi,\eta)K(\xi,\eta;x,y;t)d\eta d\xi = F(x,y,t) \tag{5.1}$$

where the kernel is

$$K = (\xi,\eta;x,y,t) = \frac{f\left\{t + a(\xi,\eta) - \frac{u(x-\xi)}{u^2-a^2} - \frac{a}{u^2-a^2}\sqrt{(x-\xi)^2 - k^2(y-\eta)^2}\right\}}{\sqrt{(x-\xi)^2 - k^2(y-\eta)^2}} +$$

$$\frac{f\left\{t + a(\xi,\eta) - \frac{u(x-\xi)}{u^2-a^2} + \frac{a}{u^2-a^2}\sqrt{(x-\xi)^2 - k^2(y-\eta)^2}\right\}}{\sqrt{(x-\xi)^2 - k^2(y-\eta)^2}} \tag{5.2}$$

and the known function

$$F(x,y;t) = \frac{1}{2\pi}\iint_{s(x,y)} A_1(\xi,\eta)K(\xi,\eta;x,y;t)d\eta d\xi \tag{5.3}$$

If the characteristic coordinates are introduced

$$x_1 = x - x_0 - k(y - y_0), \qquad y_1 = x - x_0 + k(y - y_0), \qquad z_1 = kz \tag{5.4}$$

(where x_0 and y_0 may be any numbers) then integral equation (5.1) is simplified and in some cases this integral equation is easily inverted as will be shown below.

6. SOLUTION OF THE INTEGRAL EQUATION FOR A HARMONICALLY OSCILLATING WING

1. If the additional motions of the wing are harmonic oscillations, i.e., the condition on the wing is given in the form of (4.1), then equation (5.1) becomes

$$\iint_{\sigma(x,y)} \theta(\xi,\eta)\,\frac{\cos\left[\lambda\sqrt{(x-\xi)^2 - k^2(y-\eta)^2}\right]}{\sqrt{(x-\xi)^2 - k^2(y-\eta)^2}}\,d\eta d\xi = F(x,y) \tag{6.1}$$

where the function $\theta(x,y) = \left\{\frac{\partial\varphi_1}{\partial z}\right\}_{z=0} e^{-\beta x}$ in σ and where the known function is

$$F(x,y) = -\iint_{s(x,y)} A(\xi,\eta)\,\frac{\cos\left[\lambda\sqrt{(x-\xi)^2 - k^2(y-\eta)^2}\right]}{\sqrt{(x-\xi)^2 - k^2(y-\eta)^2}}\,d\eta\,d\xi \quad (6.2)$$

where $A(x,y) = \left\{\frac{\partial\varphi_1}{\partial z}\right\}_{z=0} e^{-\beta x}$ in s. In order to solve this integral equation we introduce the characteristic coordinates x_1, y_1, z_1 with origin at "0" by means of the formula

$$x_1 = x - ky, \quad y_1 = x + ky, \quad z_1 = kz \quad (6.3)$$

In the new coordinates the variables of integration in σ will vary between the limits

$$x_E \leqq \xi_1 \leqq x_1, \quad \psi(\xi_1) \leqq \eta_1 \leqq y_1 \quad (6.4)$$

where $y_1 = \psi(x_1)$ is the equation of the wing tip - the arc ED of the wing contour - in the transformed coordinates, and x_E is the abscissa of E defined in section 5 in these same coordinates (fig. 8). Equation (6.1) is transformed to

$$\int_{x_E}^{x_1}\int_{\psi(\xi_1)}^{y_1} \theta_1(\xi_1, \eta_1)\,\frac{\cos\left[\lambda\sqrt{(x_1-\xi_1)(y_1-\eta_1)}\right]}{\sqrt{(x_1-\xi_1)(y_1-\eta_1)}}\,d\eta_1 d\xi_1 = F_1(x_1, y_1) \quad (6.5)$$

where the function

$$\theta_1(x_1,y_1) = \left\{\frac{\partial\varphi_1}{\partial z_1}\right\}_{z_1=0} e^{-\frac{\beta(x_1+y_1)}{2}}$$

and where the known function is

$$F_1(x_1,y_1) = -\iint\limits_{s(x_1,y_1)} A_1(\xi_1,\eta_1)\,\frac{\cos\left[\lambda\sqrt{(x_1-\xi_1)(y_1-\eta_1)}\right]}{\sqrt{(x_1-\xi_1)(y_1-\eta_1)}}\,d\eta_1\,d\xi_1$$

$$A_1 = \left\{\frac{\partial\varphi_1}{\partial z_1}\right\}_{z_1=0} e^{-\frac{\beta(x_1+y_1)}{2}} \tag{6.6}$$

Let us note that the normal velocity of the perturbed flow $\frac{\partial\varphi_1}{\partial z_1}$ is related to $\partial\varphi_1/\partial z_1$ by

$$\frac{\partial\varphi}{\partial z} = k\,\frac{\partial\varphi_1}{\partial z_1}$$

For brevity, the index "1" will be left off the independent variable everywhere from now on.

2. Let us look for a solution of equation (6.5) in the form of the power series

$$\theta(x,y;\lambda) = \sum_{n=0}^{\infty} \theta_{2n}(x,y)\,\lambda^{2n} \tag{6.7}$$

Into both sides of equation (6.5) let us introduce

$$\cos\left[\lambda\sqrt{(x-\xi)(y-\eta)}\right] = \sum_{n=0}^{\infty} \frac{(-1)^n}{(2n)!}\,(x-\xi)^n(y-\eta)^n\,\lambda^{2n} \tag{6.8}$$

Keeping the absolute convergence of equations (6.7) and (6.8) in mind, we multiply them term by term with the result

$$\theta(\xi,\eta)\cos\left[\lambda\sqrt{(x-\xi)(y-\eta)}\right]$$

$$=\sum_{n=0}^{\infty}\lambda^{2n}\sum_{k=0}^{k=n}\frac{(-1)^{n-k}}{[2(n-k)]!}\left[(x-\xi)(y-\eta)\right]^{n-k}\theta_{2k}(\xi,\eta) \qquad (6.9)$$

Substituting equations (6.7), (6.8) and (6.9) into equation (6.5) the latter becomes

$$\int_{x_E}^{x}\int_{\psi(\xi)}^{y}\sum_{n=0}^{\infty}\lambda^{2n}\sum_{k=0}^{k=n}\frac{(-1)^{n-k}}{[2(n-k)]!}\theta_{2k}(\xi,\eta)\left[(x-\xi)(y-\eta)\right]^{n-k-\frac{1}{2}}d\eta\,d\xi$$

$$=\iint_{s(x,y)}A(\xi,\eta)\sum_{n=0}^{\infty}\frac{(-1)^{n+1}}{(2n)!}\lambda^{2n}\left[(x-\xi)(y-\eta)\right]^{n-\frac{1}{2}}d\eta\,d\xi \qquad (6.10)$$

Taking into account the uniform convergence of the series in both sides of equation (6.10) with respect to the variables ξ and η we integrate term by term

$$\sum_{n=0}^{\infty}\lambda^{2n}\sum_{k=0}^{k=n}\frac{(-1)^{n-k}}{[2(n-k)]!}\int_{x_E}^{x}\int_{\psi(\xi)}^{x}\theta_{2k}(\xi,\eta)\left[(x-\xi)(y-\eta)\right]^{n-k-\frac{1}{2}}d\eta\,d\xi$$

$$=\sum_{n=0}^{\infty}\lambda^{2n}\frac{(-1)^{n+1}}{(2n)!}\iint_{s(x,y)}A(\xi,\eta)\left[(x-\xi)(y-\eta)\right]^{n-\frac{1}{2}}d\eta\,d\xi \qquad (6.11)$$

In equation (6.11) equating coefficients in identical powers of λ we obtain the integral equation which the functions $\theta_{2n}(x,y)$ satisfy

$$\int_{x_E}^{x}\int_{\psi(\xi)}^{y} \theta_{2n}(\xi,\eta)\,\frac{d\eta\,d\xi}{\sqrt{(x-\xi)(y-\eta)}} = F_n(x,y) \tag{6.12}$$

where

$$F_n(x,y) = f_n(x,y) + \sum_{k=0}^{n-1} f_n^k(x,y) \tag{6.13}$$

where, in its turn,

$$f_n(x,y) = \frac{(-1)^{n+1}}{(2n)!}\iint_{s(x,y)} A(\xi,\eta)\left[(x-\xi)(y-\eta)\right]^{n-\frac{1}{2}} d\eta\,d\xi \tag{6.14}$$

and

$$f_n^k(x,y) = \frac{(-1)^{n-k+1}}{\left[2(n-k)\right]!}\int_{x_E}^{x}\int_{\psi(\xi)}^{y} \theta_{2k}(\xi,\eta)\left[(x-\xi)(y-\eta)\right]^{n-k-\frac{1}{2}} d\eta\,d\xi \tag{6.15}$$

from which the functions f_n^k are defined for $k \leqq 0$ and $n > 0$. Let us note that the right side $F_n(x,y)$ of equation (6.12) depends, for θ_{2n}, on the coefficients θ_{2k} but only for $k = 0,1,2,\ldots,n-1$. Therefore, if we find θ_0, θ_2, $\theta_4,\ldots,$ $\theta_{2(n-1)}$, then $F_n(x,y)$ is a known function in the equation which the coefficient θ_{2n} in the general term of series equation (6.7) satisfies. For $n=0$ the right side in equation (6.12)

$$F_0(x,y) = f_0(x,y) = -\iint_{s(x,y)} A(\xi,\eta)\,\frac{d\eta\,d\xi}{\sqrt{(x-\xi)(y-\eta)}} \tag{6.16}$$

is a known function of x and y.

Let us solve equation (6.12) for $\theta_{2n}(x,y)$.

The two dimensional integral equation (6.12) is equivalent to the two homogeneous integral equations

$$\int_{x_E}^{x} \frac{\theta_{2n}^*(\xi,y)}{\sqrt{x - \xi}} d\xi = F_n(x,y) \tag{6.17}$$

and

$$\int_{\psi(\xi)}^{y} \frac{\theta_{2n}(\xi,\eta)}{\sqrt{y - \eta}} d\eta = \theta_{2n}^*(\xi,y) \tag{6.18}$$

each of which reduces to an Abel equation.

Using the inversion formula of the Abel integral equation and observing that for any n functions $F_n(x_E,y) = 0$ hence the solution of equation (6.17) for the function $\theta_{2n}^*(x,y)$ is

$$\theta_{2n}^*(x,y) = \frac{1}{\pi} \int_{x_E}^{x} \frac{F_{n\xi}(\xi,y)}{\sqrt{x - \xi}} d\xi \tag{6.19}$$

Let us turn to equation (6.18). We denote the parameter ξ by x, and again using the inversion formula for the Abel equation and keeping in mind that according to equation (6.19) the right side $\theta_{2n}^*[x,\psi(x)]$ of equation (6.18) for $y = \psi(x)$ is different from zero, the solution of equation (6.18) for θ_{2n} is

$$\theta_{2n}(x,y) = \frac{1}{\pi} \frac{\theta_{2n}^*[x,\psi(x)]}{\sqrt{y - \psi(x)}} + \frac{1}{\pi} \int_{\psi(x)}^{y} \frac{\theta^*{}_{2n\eta}(x,\eta)}{\sqrt{y - \eta}} d\eta \tag{6.20}$$

Substituting in equation (6.20) in place of $\theta_{2n}^*(x,y)$ its value from equation (6.19) we obtain the solution of equation (6.12) in the following form:

$$\theta_{2n}(x,y) = -\frac{1}{\pi^2} \frac{1}{\sqrt{y - \psi(x)}} \int_{x_E}^{x} \frac{F_{n\xi}[\xi,\psi(\xi)]}{\sqrt{x - \xi}} d\xi +$$

$$\frac{1}{\pi^2} \int_{x_E}^{x} \int_{\psi(x)}^{y} \frac{F_{n\xi\eta}(\xi,\eta)}{\sqrt{(x - \xi)(y - \eta)}} d\eta \, d\xi \tag{6.21}$$

Thus, according to equation (6.21), we can evaluate successively, the coefficients θ_0, θ_2, $\theta_4, \ldots,$ θ_{2k}, etc.

Formula (6.21) shows that all the coefficients $(n=0,1,2,\ldots)$ for $y = \psi(x)$, i.e., on the wing tip ED, become infinite as $R^{-1/2}$ where R is the distance of the point (x,y) from ED. Therefore, the velocity of the perturbed stream becomes infinite as the specified order on the wing tips, approaching from outside the wing.

It is possible to represent the inversion (6.21) of (6.12) as

$$\theta_{2n}(x,y) = \frac{1}{\pi^2}\frac{\partial^2}{\partial x \partial y}\int_{x_E}^{x}\int_{\psi(x)}^{y}\frac{F_n(\xi,\eta)}{\sqrt{(x-\xi)(y-\eta)}}\,d\eta\,d\xi \qquad (6.22)$$

which can be confirmed without difficulty by direct differentiation with respect to the parameter.

Therefore, the solutions of integral equation (6.5) are constructed in the form of the absolutely convergent series (6.7) for any value of the parameter λ.

The coefficients $\theta'_{2n}(x,y)$ are expanded in the series

$$\theta'(x,y;\lambda) = \sum_{n=0}^{\infty}\theta'_{2n}(x,y)\,\lambda^{2n} \qquad (6.23)$$

We find the function $\theta'(x,y) = \left\{\frac{\partial\varphi_1}{\partial z}\right\}_{z=0} e^{-\beta\frac{(x+y)}{2}}$ in Σ'_3 (fig. 6) lying off the wing to the left, from equations (6.21) or (6.22) by replacing in the latter the function $\psi(x)$ by $\psi_2(x)$ (where $y = \psi_2(x)$ is the equation of the arc E'D' of the wing contour - the left wing tip) and interchange the role of the coordinates.

3. Let us consider a wing of small span. Let the characteristic cones from E_1 and E_1' intersect the wing as shown in figure 9. The points E_1 and E_1' are defined just as are E and E_1 in section 5.

Let us divide the x,y-plane where the medium is perturbed into the regions S_0, S_1, S_2, . . ., S_n, ...

The region S_n is the M-shaped region lying within the characteristic aft-cones from E_n and E_n' (or within one of them) and outside the characteristic aft-cones from E_{n+1} and E_{n+1}'. In its turn, we divide the part of the x,y-plane lying to the right and left of the wing into the strips σ_1, σ_2, . . ., σ_n, . . . and σ_1', σ_2', . . ., σ_n', . . ., respectively. The strip σ_n lies within the characteristic aft-cone from E_n. Therefore, σ_n and σ_n' are the parts of S_n lying respectively to the right and to the left of the wing.

Let us return to the fundamental formula for the velocity potential, equation (4.2), which is in the characteristic coordinates

$$\varphi_1(x,y,z,t) =$$

$$-\frac{1}{2\pi} e^{\beta\frac{(x+y)}{2}} \iint_{S(x,y,z)} \left\{\frac{\partial\varphi_1}{\partial z}\right\}_{z=0} e^{-\frac{\beta(\xi+\eta)}{2}} \frac{\cos\left[\lambda\sqrt{(x-\xi)(y-\eta)-z^2}\right]}{\sqrt{(x-\xi)(y-\eta)-z^2}} d\eta\, d\xi \tag{6.24}$$

In order to compute the velocity potential by means of this formula in those parts of the space (or, in particular, on the wing surface) for which the region of integration $S(x,y,z)$ intersects the region S_n of the x,y-plane, we must first determine $\frac{\partial\varphi_1}{\partial z} e^{-\beta\frac{(x+y)}{2}}$ outside the wing in the strips σ_1, σ_2, . . ., σ_n, and σ_1', σ_2', . . ., σ_n', . . ., respectively.

Let us denote $\frac{\partial\varphi_1}{\partial z} e^{-\beta\frac{(x+y)}{2}}$ in the σ_1, σ_2, . . ., σ_n, . . . strips by θ, $\theta^{(2)}$, $\theta^{(3)}$, . . ., $\theta^{(n)}$. . . and in σ_1', σ_2', . . ., σ_n', . . . by θ', $\theta'^{(2)}$, . . ., $\theta'^{(n)}$, ...

Let us construct the integral equation for $\theta^{(2)}$.

Let us express the velocity potential at the point $N(x,y,0)$ in σ_2 by formula (6.24) which is equal to zero everywhere in the strips σ_1, σ_2, . . . σ_n (correspondingly in σ_1', σ_2', . . . σ_n').

Let us divide the region of integration into the three parts $S = s + \sigma + \sigma_1'^*$ as shown in figure 10.

The function $\frac{\partial\varphi_1}{\partial z} e^{-\beta\frac{(x+y)}{2}} = A(x,y)$ is given in $s(x,y)$ on the wing. In $\sigma_1'^*(x,y)$ of σ_1', the function $\frac{\partial\varphi_1}{\partial z} e^{-\beta\frac{(x+y)}{2}} = \theta'(x,y)$ is determined by the solution of equation (6.23).

In $\sigma(x,y)$ we denote $\frac{\partial\varphi_1}{\partial z} e^{-\beta\frac{(x+y)}{2}}$ by $\theta^{(2)}(x,y)$. Then we arrive at the integral equation satisfied by $\theta^{(2)}$

$$\iint\limits_{\sigma(x,y)} \theta^{(2)}(\xi,\eta) \frac{\cos\left[\lambda\sqrt{(x-\xi)(y-\eta)}\right]}{\sqrt{(x-\xi)(y-\eta)}} d\eta\, d\xi = F^{(2)}(x,y) \quad (6.25)$$

where the limits of integration are bounded by $x_E \leqq \xi \leqq x$ and $\psi(\xi) \leqq \eta \leqq y$ and the known function $F^{(2)}$ is defined as

$$F^{(2)}(x,y) = -\iint_{s(x,y)} A(\xi,\eta) \frac{\cos\left[\lambda\sqrt{(x-\xi)(y-\eta)}\right]}{\sqrt{(x-\xi)(y-\eta)}} d\eta\, d\xi - \iint_{\sigma_1'^*} \theta'(\xi,\eta) \frac{\cos\left[\lambda\sqrt{(x-\xi)(y-\eta)}\right]}{\sqrt{(x-\xi)(y-\eta)}} d\eta\, d\xi \tag{6.26}$$

We look for the solution of integral equation (6.25) in the form of the power series

$$\theta^{(2)}(x,y) = \sum_{n=0}^{\infty} \theta_{2n}^{(2)}(x,y)\, \lambda^{2n} \tag{6.27}$$

Moreover, by reasoning similarly to the preceding section we arrive at an integral equation for the coefficient $\theta_{2n}^{(2)}$ in the general term of series (6.27)

$$\int_{x_E}^{x}\int_{\psi(\xi)}^{y} \theta_{2n}^{(2)}(\xi,\eta) \frac{d\eta\, d\xi}{\sqrt{(x-\xi)(y-\eta)}} = F_{2n}^{(2)}(x,y) \tag{6.28}$$

where

$$F_n^{(2)}(x,y) = F_n(x,y) + \sum_{k=0}^{k=n} f_n^{(2)k}(x,y) \tag{6.29}$$

where, in its turn,

$$f_n^{(2)k}(x,y) = \frac{(-1)^{n-k+1}}{\left[2(n-k)\right]!} \iint_{\sigma_1'^*} e_{2k}'(\xi,\eta)\left[(x-\xi)(y-\eta)\right]^{n-k-\frac{1}{2}} d\eta\, d\xi \tag{6.30}$$

Equation (6.28) differs from equation (6.12) only in the form of the $F_n^{(2)}$ function on the right side. Taking into account the condition on the boundary $F_n^{(2)}(x_E,y) = 0$ for any $n=0, 1, 2, \ldots$ the solution of (6.28) for $\theta_{2n}^{(2)}$ is obtained by using the solution (6.21) or (6.22) of (6.12) as a final formula if $F_n(2)$ replaces F_n in the latter. The

function $F_n^{(2)}(x,y)$ depends on the coefficient $\theta_{2k}^{(2)}$ where $k=0, 1, 2, \ldots, n-1$. Therefore, just as in the previous section, if the $\theta_{2k}^{(2)}$ for $k = 0,1,2, \ldots, n-1$ are already found, then $F_n(2)$ in the right side of (6.28) is a known quantity. Therefore, the functions $\theta_0^{(2)}, \theta_2^{(2)}, \ldots, \theta_{2n}^{(2)}, \ldots$ may be found successively.

Let us note that $F_n^{(2)}$, and therefore the coefficient $\theta_{2n}^{(2)}$, depends only on the first $n + 1$ coefficients $\theta_0', \theta_2', \ldots, \theta_{2n}'$ of the series expansion of

$$\theta'(x,y) = \frac{\partial\varphi_1}{\partial z} e^{-\beta\frac{(x+y)}{2}}$$

in σ_1'.

Reasoning in the same manner, we may find the values of $\theta^{(3)}, \theta^{(4)}, \ldots, \theta^{(N)} \ldots$ in $\sigma_3, \sigma_4, \ldots, \sigma_N, \ldots$ (correspondingly $\theta'^{(3)}, \theta'^{(4)}, \ldots, \theta'^{(N)}, \ldots$ in $\sigma_1', \sigma_2', \ldots \sigma_N'$).

Therefore, the velocity potential can be computed by equation (6.24) at every point $M(x,y,z)$ of the space for which the region $S(x,y,z)$ intersects any number of strips σ_N or σ_N'.

All the results hold for the case when the wing tips are not given by one equation $y = \psi(x)$ but consist of curves given by the equations $y = \psi_k(x)$ $k = 1, 2, \ldots, m$. The same observation applies to the leading edges $E'E$ (or E_1E_1') of the wing. Therefore, in our problem the wing contour may be piecewise smooth.

If the frequency of oscillation ω of the wing be put equal to zero then the coefficients $\theta_0, \theta_0^{(2)}, \ldots, \theta_0^{(N)} \ldots$ coincide with the values of the derivatives $\partial\varphi_0/\partial z$ in the strips $\sigma_1, \sigma_2, \ldots, \sigma_N, \ldots$ respectively, for the steady motion of a wing when the streamline condition (1.6) on the wing is given in the form

$$\frac{\partial\varphi_0}{\partial z} = A_1(x,y)$$

7. INFLUENCE OF THE VORTEX SYSTEM FROM THE WING FOR A HARMONICALLY OSCILLATING WING

1. Let us consider the case when the region of integration $S(x,y,z)$ in formula (4.2) for the velocity potential intersects the vortex sheet Σ_1 as shown in figure 26(a) (see also fig. 11). That is, let us consider the case when the trailing edge of the wing - the arc DT of the wing contour - or, so to speak, the vortex sheet, acts on the point $M(x,y,z)$ of space.

Using condition (1.10) we determine $\partial\varphi_1/\partial z$ in the region Ω of the x,y-plane and shown in figure 11.

The region Ω is off the wing within the characteristic aft-cone from D and outside the characteristic cones from T. Therefore, Ω is affected by the vortices trailing from the edge DT of the wing but not from $D'T'$. The region Ω partially intersects the vortex sheet Σ_1.

Let us return to the characteristic coordinates x_1, y_1, z_1 which we introduced earlier by formula (6.3).

As before, for brevity we omit the subscript 1 from the independent variables.

Condition (1.10) fulfilled on Σ_1 in the characteristic coordinates is

$$\frac{\partial\varphi_1}{\partial t} + u\frac{\partial\varphi_1}{\partial x} + u\frac{\partial\varphi_1}{\partial y} = 0 \tag{7.1}$$

From equation (7.1) it follows that the function

$$\varphi_\omega = \varphi_1(x,y,0,t)e^{i\frac{\omega}{u}\frac{x+y}{2}}$$

remains constant everywhere on the vortex sheet along lines parallel to the direction of the incoming stream, i.e., along vortex lines from the wing.

Since the velocity potential $\varphi_1 = 0$ everywhere in the x,y-plane off the wing surface and the vortex sheet, then it may be verified that φ_ω possesses the specified property everywhere in Ω.

Let us construct the equation for the function

$$\vartheta(x,y) = \left[\frac{\partial\varphi_1}{\partial z}\right]_{z=0} e^{-\beta\frac{x+y}{2}}$$

in Ω.

Let us express φ_ω at the arbitrary point $N(x,y,0)$ lying in Ω by using the basic formula for the velocity potential (6.24). We divide the region of integration S into three parts, as shown in figure 12, into $s(x,y)$, $\sigma_1{}^*(x,y)$ and $\sigma(x,y)$. The regions s and $\sigma_1{}^*$ are parts of the wing surface and Σ_3, defined above, respectively, which fall within the characteristic fore-cone from $N(x,y,0)$. The region σ is the part of Ω in the same cone. The variables of integration in σ vary between $x_D \leqq \xi \leqq x$ and $X(\xi) \leqq \eta \leqq y$ where x_D is the abscissa of D and $y = X(x)$ is the equation of the arc DT of the wing contour. The expression obtained for φ_ω is differentiated in a direction parallel to the velocity vector of the impinging stream.

Therefore we arrive at the integro-differential equation which ϑ satisfies in Ω

$$\frac{\partial}{\partial x}\int_{x_D}^{x}\int_{X(\xi)}^{y}\vartheta(\xi,\eta)\,\frac{\cos\left[\lambda\sqrt{(x-\xi)(y-\eta)}\right]}{\sqrt{(x-\xi)(y-\eta)}}\,d\eta\,d\xi +$$

$$\frac{\partial}{\partial y}\int_{x_D}^{x}\int_{X(\xi)}^{y}\vartheta(\xi,\eta)\,\frac{\cos\left[\lambda\sqrt{(x-\xi)(y-\eta)}\right]}{\sqrt{(x-\xi)(y-\eta)}}\,d\eta\,d\xi +$$

$$\mu\lambda^2\int_{x_D}^{x}\int_{X(\xi)}^{y}\vartheta(\xi,\eta)\,\frac{\cos\left[\lambda\sqrt{(x-\xi)(y-\eta)}\right]}{\sqrt{(x-\xi)(y-\eta)}}\,d\eta\,d\xi = \Phi(x,y) \qquad (7.2)$$

where $\mu = -i\,\dfrac{u^2 - a^2}{u\omega}$ and the known function is

$$\Phi(x,y) = \frac{\partial}{\partial L}\left\{-\iint_{s(x,y)} A(\xi,\eta)K_1(\xi,\eta;x,y;\lambda)\,d\eta\,d\xi - \iint_{\sigma_1(x,y)} \theta(\xi,\eta)K_1(\xi,\eta;x,y;\lambda)\,d\eta\,d\xi\right\} - \mu\lambda^2 \iint_{s(x,y)} A(\xi,\eta)K_1(\xi,\eta;x,y;\lambda)\,d\eta\,d\xi - \mu\lambda^2 \iint_{\sigma_1(x,y)} \theta(\xi,\eta)K_1(\xi,\eta;x,y;\lambda)\,d\eta\,d\xi \tag{7.3}$$

where $K_1(\xi,\eta;\,x,y;\lambda) = \dfrac{\cos\left[\lambda\sqrt{(x-\xi)(y-\eta)}\right]}{\sqrt{(x-\xi)(y-\eta)}}$ and the operator

$\dfrac{\partial}{\partial L} = \dfrac{\partial}{\partial x} + \dfrac{\partial}{\partial y}$. The function θ is determined from equation (6.7) of the preceding section.

2. We will look for a solution of equation (7.2) in the form of the power series

$$\vartheta(x,y;\lambda) = \sum_{n=0}^{\infty} \vartheta_{2n}(x,y)\,\lambda^{2n} \tag{7.4}$$

Keeping in mind the absolute convergence of equation (7.4) and using the expansion (6.8) for the cosine we obtain

$$\vartheta(\xi,\eta;\lambda)\cos\left[\lambda\sqrt{(x-\xi)(y-\eta)}\right] = \sum_{n=0}^{\infty} \lambda^{2n} \sum_{k=0}^{k=n} \frac{(-1)^{n-k}}{\left[2(n-k)\right]!}\,\vartheta_{2k}(\xi,\eta)\left[(x-\xi)(y-\eta)\right]^{n-k} \tag{7.5}$$

Substituting equation (7.5), (6.8), and (6.9) into equation (7.2), the latter becomes

$$\frac{\partial}{\partial x}\iint_{\sigma}\sum_{n=0}^{\infty}\lambda^{2n}\sum_{k=0}^{k=n}\frac{(-1)^{n-k}}{\left[2(n-k)\right]!}\vartheta_{2k}(\xi,\eta)\left[(x-\xi)(y-\eta)\right]^{n-k-\frac{1}{2}}d\eta\,d\xi\,+$$

$$\frac{\partial}{\partial y}\iint_{\sigma}\sum_{n=0}^{\infty}\lambda^{2n}\sum_{k=0}^{k=n}\frac{(-1)^{n-k}}{\left[2(n-k)\right]!}\vartheta_{2k}(\xi,\eta)\left[(x-\xi)(y-\eta)\right]^{n-k-\frac{1}{2}}d\eta\,d\xi\,+$$

$$\mu\iint_{\sigma}\sum_{n=0}^{\infty}\lambda^{2(n+1)}\sum_{k=0}^{k=n}\frac{(-1)^{n-k}}{\left[2(n-k)\right]!}\vartheta_{2k}(\xi,\eta)\left[(x-\xi)(y-\eta)\right]^{n-k-\frac{1}{2}}d\eta\,d\xi$$

$$=\frac{\partial}{\partial L}\iint_{s}\sum_{n=0}^{\infty}\frac{(-1)^{n+1}}{(2n)!}\lambda^{2n}A(\xi,\eta)\left[(x-\xi)(y-\eta)\right]^{n-\frac{1}{2}}d\eta\,d\xi\,+$$

$$\frac{\partial}{\partial L}\iint_{\sigma_1^*}\sum_{n=0}^{\infty}\lambda^{2n}\sum_{k=0}^{k=n}\frac{(-1)^{n-k+1}}{\left[2(n-k)\right]!}\theta_{2k}(\xi,\eta)\left[(x-\xi)(y-\eta)\right]^{n-k-\frac{1}{2}}d\eta\,d\xi\,+$$

$$\mu\iint_{s}\sum_{n=0}^{\infty}\frac{(-1)^{n+1}}{(2n)!}\lambda^{2(n+1)}A(\xi,\eta)\left[(x-\xi)(y-\eta)\right]^{n-\frac{1}{2}}d\eta\,d\xi\,+$$

$$\mu\iint_{\sigma_1}\sum_{n=0}^{\infty}\lambda^{2(n+1)}\sum_{k=0}^{k=n}\frac{(-1)^{n-k+1}}{\left[2(n-k)\right]!}\theta_{2k}(\xi,\eta)\left[(x-\xi)(y-\eta)\right]^{n-k-\frac{1}{2}}d\eta\,d\xi \tag{7.6}$$

Taking into account the uniform convergence of the series with respect to ξ and η in both sides of equation (7.6), we integrate it term by term. Then, keeping in mind, the uniform convergence of the obtained series with respect to x and y which is also maintained after

differentiation, we differentiate the specified series term by term with respect to x and y. After these operations on both sides of the obtained equation we equate coefficients in identical powers of λ. Therefore we arrive at the integro-differential equation which the coefficients of equation (7.4) satisfy

$$\frac{\partial}{\partial x}\int_{x_D}^{x}\int_{\chi(\xi)}^{y}\vartheta_{2n}(\xi,\eta)\frac{d\eta\,d\xi}{\sqrt{(x-\xi)(y-\eta)}}+$$

$$\frac{\partial}{\partial y}\int_{x_D}^{x}\int_{\chi(\xi)}^{y}\vartheta_{2n}(\xi,\eta)\frac{d\eta\,d\xi}{\sqrt{(x-\xi)(y-\eta)}}=\Phi_n(x,y) \qquad (7.7)$$

where

$$\Phi_n(x,y)=\frac{(-1)^{n+1}}{(2n)!}\frac{\partial}{\partial L}\iint_S A(\xi,\eta)\frac{d\eta\,d\xi}{\sqrt{(x-\xi)(y-\eta)}}+$$

$$\frac{(-1)^{n+1}}{[2(n-k)]!}\mu\iint_S A(\xi,\eta)\left[(x-\xi)(y-\eta)\right]^{n-3/2}d\eta\,d\xi+$$

$$\sum_{k=0}^{k=n}\frac{(-1)^{n-k+1}}{[2(n-k)]!}\frac{\partial}{\partial L}\iint_{\sigma_1^*}\vartheta_{2k}(\xi,\eta)\left[(x-\xi)(y-\eta)\right]^{n-k-\frac{1}{2}}d\eta\,d\xi+$$

$$\sum_{k=0}^{k=n-1}\frac{(-1)^{n-k}}{[2(n-k)]!}\mu\iint_{\sigma_1^*}\theta_{2k}(\xi,\eta)\left[(x-\xi)(y-\eta)\right]^{n-k-\frac{1}{2}}d\eta\,d\xi+$$

$$\sum_{k=0}^{k=n-1}\frac{(-1)^{n-k+1}}{[2(n-k)]!}\frac{\partial}{\partial L}\iint_{\sigma}\vartheta_{2k}(\xi,\eta)\left[(x-\xi)(y-\eta)\right]^{n-k-\frac{1}{2}}d\eta\,d\xi$$

(7.8)

in which the last sum and also the terms in μ are defined for $n>0$.

Let us note that the right side, Φ_n, of equation (7.7) for ϑ_{2n} contains terms with coefficients ϑ_{2k} but only for $k = 0, 1, 2, \ldots, n-1$.

Let us transform equation (7.7). We integrate by parts with respect to ξ the first integral on the left side of equation (7.7), the second by parts with respect to η, afterward we differentiate with respect to the parameters x and y, respectively. Equation (7.7) becomes

$$\int_{x_D}^{x}\int_{\chi(\xi)}^{y} \frac{\vartheta_{2n\xi}(\xi,\eta) + \vartheta_{2n\eta}(\xi,\eta)}{\sqrt{(x-\xi)(y-\eta)}}\, d\eta\, d\xi = \Phi_n^*(x,y) \tag{7.9}$$

where

$$\Phi_n^*(x,y) = -\frac{1}{\sqrt{x-x_D}}\int_{\chi(x_D)}^{y} \frac{\vartheta_{2n}(x_D,\eta)}{\sqrt{y-\eta}}\, d\eta +$$

$$\int_{x_D}^{x} \frac{\vartheta_{2n}\left[\xi,\chi(\xi)\right]}{\sqrt{(x-\xi)\left[y-\chi(\xi)\right]}} \left\{\frac{d\chi(\xi)}{d\xi} - 1\right\} d\xi + \Phi_n(x,y) \tag{7.10}$$

Let us note that the first term in equation (7.10) of the right side of equation (7.9) becomes infinite for $x = x_D$.

Let us return to expression (7.8) for Φ_n and separate out of it the terms corresponding to the value $k = n$ in the first sum - the component

$$-\frac{\partial}{\partial x}\iint_{\sigma_1^*} \frac{\theta_{2n}(\xi,\eta)}{\sqrt{(x-\xi)(y-\eta)}}\, d\eta\, d\xi = R$$

We integrate this integral by parts with respect to ξ keeping in mind that the limits of integration in σ_1^* are $x_E \leqq \xi \leqq x_D$ and $\psi(\xi) \leqq \eta \leqq y$ and that $\theta_{2n}(x_E,y) = 0$. Then we differentiate with respect to x

$$R = \frac{1}{\sqrt{x - x_D}} \int_{\psi(x_D)}^{y} \frac{\theta_{2n}(x_D,\eta)}{\sqrt{y - \eta}} d\eta + \int_{x_D}^{x_E} \frac{1}{\sqrt{x - \xi}} \frac{\partial}{\partial \xi} \left\{ \int_{\psi(\xi)}^{y} \frac{\theta_{2n}(\xi,\eta)}{\sqrt{y - \eta}} d\eta \right\} d\xi \tag{7.11}$$

Let us subject the desired function ϑ in equation (7.2) to a supplementary condition.

Let us assume that at the trailing edges - the arc DT (or D'T', respectively) of the wing contour - and on the straight line DD* (figs. 11 and 12) - the intersection of the characteristic aft-cone from D with the z=0 plane (correspondingly the line $D'D_1^*$) - the velocity of the perturbed flow, and therefore the function ϑ, is a continuous function, then the conditions are fulfilled

$$\vartheta\left[x,\chi(x)\right] = A\left[x,\chi(x)\right] \tag{7.12}$$

$$\vartheta\left[x_D,y\right] = \theta\left[x_D,y\right] \tag{7.13}$$

These conditions are analogous to the Joukowsky condition for flow around a wing by an incompressible fluid. From equation (7.13) follows

$$\frac{1}{\sqrt{x - x_D}} \int_{\chi(x_D)}^{y} \frac{\vartheta_{2n}(x_D,\eta)}{\sqrt{y - \eta}} d\eta = \frac{1}{\sqrt{x - x_D}} \int_{\psi(x_D)}^{y} \frac{\vartheta_{2n}(x_D,\eta)}{\sqrt{y - \eta}} d\eta \tag{7.14}$$

since $\chi(x_D) = \psi(x_D)$.

Substituting equations (7.11) and (7.14) in equation (7.10), the latter becomes

$$\Phi_n^*(x,y) = \int_{x_D}^{x} \frac{\vartheta_{2n}\left[\xi,\chi(\xi)\right]}{\sqrt{(x - \xi)\left[y - \chi(\xi)\right]}} \left\{ \frac{d\chi(\xi)}{d\xi} - 1 \right\} d\xi + \tag{7.15}$$

$$\int_{x_D}^{x_E} \frac{1}{\sqrt{x - \xi}} \frac{\partial}{\partial \xi} \left\{ \int_{\psi(\xi)}^{y} \frac{\vartheta_{2n}(\xi,\eta)}{\sqrt{y - \eta}} d\eta \right\} d\xi + \Phi_n'(x,y)$$

where

$$\Phi_n' = \Phi_n - R \tag{7.16}$$

For $n = 0$, the right side in equation (7.9) is a known function of x and y

$$\Phi_0^* = \int_{x_D}^{x} \frac{\vartheta_0[\xi, \chi(\xi)]}{\sqrt{(x - \xi)[y - \chi(\xi)]}} \left\{ \frac{d\chi(\xi)}{d\xi} - 1 \right\} d\xi +$$

$$\int_{x_D}^{x_E} \frac{1}{\sqrt{x - \xi}} \frac{\partial}{\partial \xi} \left\{ \int_{\psi(\xi)}^{y} \frac{\theta_0(\xi,\eta)}{\sqrt{y - \eta}} d\eta \right\} d\xi -$$

$$\frac{\partial}{\partial L} \iint_S A(\xi,\eta) \frac{d\eta\, d\xi}{\sqrt{(x - \xi)(y - \eta)}} - \frac{\partial}{\partial y} \int_{\sigma_1^*} \theta_0(\xi,\eta) \frac{d\eta\, d\xi}{\sqrt{(x - \xi)(y - \eta)}} \tag{7.17}$$

Let us solve equation (7.9) for $\vartheta_{2nx} + \vartheta_{2ny}$.

The two-dimensional integral equation (7.9) is equivalent to two homogeneous equations

$$\int_{x_D}^{x} \frac{\vartheta_{2n}^*(\xi,y)}{\sqrt{(x - \xi)}} d\xi = \Phi_n^*(x,y) \tag{7.18}$$

and

$$\int_{\chi(\xi)}^{y} \frac{\vartheta_{2n\xi}(\xi,\eta) + \vartheta_{2n\eta}(\xi,\eta)}{\sqrt{y - \eta}} d\eta = \vartheta_{2n}^*(\xi,y) \tag{7.19}$$

each of which reduces to an Abel equation. Using the Abel inversion formula we find the solutions of equations (7.18) and (7.19) as

$$\vartheta_{2n}^*(x,y) = \frac{1}{\pi}\frac{\Phi_n^*(x_D,y)}{\sqrt{y - x_D}} + \frac{1}{\pi}\int_{x_D}^{x}\frac{\Phi_{n\xi}^*(\xi,y)}{\sqrt{x - \xi}}\,d\xi \tag{7.20}$$

and

$$\vartheta_{2n\xi}(\xi,y) + \vartheta_{2ny}(\xi,y) = \frac{1}{\pi}\frac{\vartheta_{2n}^*\left[\xi,\chi(\xi)\right]}{\sqrt{y - \chi(\xi)}} + \frac{1}{\pi}\int_{\chi(\xi)}^{y}\frac{\vartheta_{2n\eta}^*(\xi,\eta)}{\sqrt{y - \eta}}\,d\eta \tag{7.21}$$

Substituting equation (7.20) into equation (7.21), first replacing in the latter by x, we obtain the solution of equation (7.9) as

$$\begin{aligned}\vartheta_{2nx}(x,y) + \vartheta_{2ny}(x,y) = {} & \frac{1}{\pi^2}\frac{\Phi_n^*\left[x_D,\chi(x)\right]}{\sqrt{x - x_D}\sqrt{y - \chi(x)}} + \\ & \frac{1}{\pi^2}\frac{1}{\sqrt{y - \chi(x)}}\int_{x_D}^{x}\frac{\Phi_{n\xi}^*\left[\xi,\chi(x)\right]}{\sqrt{x - \xi}}\,d\xi + \\ & \frac{1}{\pi^2}\frac{1}{\sqrt{x - x_D}}\int_{\chi(x)}^{y}\frac{\Phi_{n\eta}^*(x_D,\eta)}{\sqrt{y - \eta}}\,d\eta + \\ & \frac{1}{\pi^2}\int_{x_D}^{x}\int_{\chi(x)}^{y}\frac{\Phi_{n\xi\eta}^*(\xi,\eta)}{\sqrt{(x - \xi)(y - \eta)}}\,d\eta\,d\xi\end{aligned} \tag{7.22}$$

Integrating equation (7.22) along the straight line parallel to the free-stream between the limits of $\bar{N}(x,\bar{y},0)$ and $N(x,y,0)$ we find the formula determining ϑ_{2n} in the general form of equation (7.4)

$$\vartheta_{2n}(x,y) = \vartheta_{2n}(\bar{x},\bar{y}) + \frac{1}{\pi^2}\int_{\bar{x}}^{x} \frac{\Phi_n^*\left[x_D,\chi(x_1)\right]}{\sqrt{x_1 - x_D}\sqrt{x_1 + y - x - \chi(x_1)}}\,dx_1 +$$

$$\frac{1}{\pi^2}\int_{\bar{x}}^{x}\int_{x_D}^{x_1} \frac{\Phi_{n\xi}^*\left[\xi,\chi(x_1)\right]d\xi\,dx_1}{\sqrt{x_1 - \xi}\sqrt{x_1 + y - x - \chi(x_1)}} +$$

$$\frac{1}{\pi^2}\int_{\bar{x}}^{x}\int_{\chi(x_1)}^{x_1+y-x} \frac{\Phi_{n\eta}^*(x_D,\eta)\,d\eta\,dx_1}{\sqrt{x_1 - x_D}\sqrt{x_1 + y - x - \eta}} +$$

$$\frac{1}{\pi^2}\int_{\bar{x}}^{x}\int_{x_D}^{x_1}\int_{\chi(x_1)}^{x_1+y-x} \frac{\Phi_{n\xi\eta}^*(\xi,\eta)}{\sqrt{x_1 - \xi}\sqrt{x_1 + y - x - \eta}}\,d\eta\,d\xi\,dx_1 \tag{7.23}$$

If in equation (7.23) the coordinates $\bar{x}$ and $\bar{y}$ are taken as solutions of $\bar{y} - \bar{x} + x - y = 0$ and $\bar{y} - \chi(\bar{x}) = 0$ and the value of $\vartheta_{2n}(\bar{x},\bar{y})$ is determined from condition (7.12) on the trailing edge, then we find ϑ_{2n} on the vortex sheet.

If in the same formula, the coordinates $\bar{x}$ and $\bar{y}$ are set equal to $\bar{x} = x_D$ and $\bar{y} = y - x + x_D$ and the value of $\vartheta_{2n}(\bar{x},\bar{y})$ is determined from equation (7.13) on the line $x = x_D$, then we find ϑ_{2n} outside the vortex sheet in the region it affects.

Thus, through equation (7.23), we can compute successively the coefficients ϑ_0, ϑ_2, . . ., ϑ_{2n}, ...

Therefore, the solution of equation (7.2) is constructed as the absolutely convergent series (7.4) for any value of λ.

The coefficients ϑ_{2n}' are expanded in the series

$$\vartheta'(x,y;\lambda) = \sum_{n=0}^{\infty} \vartheta_{2n}'(x,y)\lambda^{2n} \tag{7.24}$$

The function $\vartheta' = \frac{\partial\varphi_1}{\partial z} e^{-\beta\frac{x+y}{2}}$ in Ω' (fig. 11) may be computed through equation (7.23) if the function $\chi_2(x)$ replaces $\chi(x)$ in it (where $y = \chi_2(x)$ is the equation of $D'T'$ of the wing contour) and we interchange the role of the coordinates.

3. Let us consider the general case of the flow over an oscillating wing by a supersonic stream. Let the characteristic aft-cones from E_1 and E_1' and D_1 and D_1' intersect the wing as shown in figure 13. Then E_1 (correspondingly E_1'), as shown above, are defined so that to the left on the leading edge equation (3.7) is satisfied and to the right it is not. The points D_1 and D_1' are, respectively, the most right and left points on the wing plan form.

The space of the considered wing plan form as transformed by equation (5.4) is illustrated in figure 14.

Let us divide the x,y-plane where the medium is perturbed into a series of regions: the regions considered in the preceding section, S_0, S_1, . . ., S_n, . . ., S_N and the regions Δ_1, Δ_2, . . ., Δ_n, ... The region S_N is the M-shaped region bounded downstream by the intersection of the characteristic cones from D_1 and D_1' with the $z = 0$ plane. In the $z = 0$ plane, these lines are the upper bounds of the region of influence of the trailing vortex sheet.

The region Δ_n is M-shaped lying between the characteristic cones from D_n, D_n', D_{n+1}, D_{n+1}'. We divide, in its turn, the part of the x,y-plane lying to the right and left of the wing, respectively, into the strips σ_1, σ_2, . . . σ_n, . . ., σ_N defined above and into δ_1, δ_2, . . ., δ_n, . . . and into σ_1', σ_2', . . ., σ_n', . . ., σ_N' defined above and δ_1', δ_2', . . ., δ_n', . . . correspondingly. The strip δ_n is that part of Δ_n to the right and δ_n' is the corresponding part of Δ_n to the left of the wing. It is easy to see that the region Ω defined at the beginning of this section is in δ_1.

In order to solve completely the problem of the flow over the wing shown in figures 13 and 14, the derivative $\partial\varphi_1/\partial z$ must be determined

in $\delta_1, \delta_2, \ldots, \delta_n, \ldots$ and in $\delta_1', \delta_2', \ldots, \delta_n', \ldots$.

Let us denote the function $\frac{\partial\varphi_1}{\partial z} e^{-\beta\frac{(x+y)}{2}}$ by $\vartheta, \vartheta^{(2)}, \vartheta^{(3)}, \ldots, \vartheta^{(n)} \ldots$ and $\vartheta', \vartheta'^{(2)}, \ldots, \vartheta'^{(n)}, \ldots$ in the $\delta_1, \delta_2, \ldots, \delta_n, \ldots$ and $\delta_1', \delta_2', \ldots, \delta_n', \ldots$ strips, respectively.

Applying equation (6.24) for the velocity potential we construct φ_ω for any point $N(x,y,0)$ in δ_2.

We divide the region of integration S which depends on the form of the function $\frac{\partial\varphi_1}{\partial z} e^{-\beta\frac{x+y}{2}}$ into the following: $S = s + \sigma^* + \sigma_1^{*\prime} + S^* + \sigma$, as shown in figure 15. This function is given in s. It was determined in σ^* and σ'^* in the preceding section by the solutions of equations (6.7), (6.23), (6.27), etc. In s^* it is determined by the solution of equation (7.24). We denote $\frac{\partial\varphi_1}{\partial z} e^{-\beta\frac{x+y}{2}}$ in σ by $\vartheta^{(2)}$. Using the boundary conditions (1.10) and (1.12) we arrive at the integro-differential equation which $\vartheta^{(2)}$ satisfies and which differs from equation (7.2) only in the form of the right side. On the one hand the right side depends on the solutions $\theta, \theta^{(2)}, \ldots, \theta^{(N)}, \theta', \theta'^{(2)}, \ldots, \theta'^{(N)}$ and on the other hand on the solutions ϑ'. We construct $\vartheta^{(2)}$ in the form of a power series in the parameter λ.

Requiring the fulfillment of equations (7.12) and (7.13) for $\vartheta^{(2)}$ we obtain for the coefficients $\vartheta_0^{(2)}, \vartheta_2^{(2)}, \ldots, \vartheta_{2n}^{(2)}, \ldots$ an expansion in series of $\vartheta^{(2)}$ of equations of the form (7.9) which differ from each other in the form of the right side.

The right side in the equation for the coefficient $\vartheta_{2n}^{(2)}$ in the general term of the series for $\vartheta^{(2)}$ depends on the first $n+1$ coefficients of the expansion of $\theta^{(i)}$ and $\theta'^{(i)}$ where i takes all values less than or equal to N, and on the first n coefficients $\vartheta_0^{(2)}, \vartheta_2^{(2)}, \ldots, \vartheta_{2k}^{(2)}$ $(k=0, 1, 2, \ldots, n-1)$ of the series expansion of

the desired function $\vartheta^{(2)}$. Therefore, it is possible to find successively the coefficients $\vartheta_0^{(2)}$, $\vartheta_2^{(2)}$, . . ., $\vartheta_{2n}^{(2)}$ using the solution (7.22) of (7.9) as a final formula if there is put in the latter, instead of Φ_n^*, right sides in the equations of the form of (7.9) for the respective coefficients of the expansion of $\vartheta_{2n}^{(2)}$.

By the same reasoning, values may be found of $\vartheta^{(3)}$, $\vartheta^{(4)}$, . . ., $\vartheta^{(k)}$, . . . in δ_3, δ_4, . . ., δ_k, ...

Therefore the velocity potential may be computed by equation (6.24) at any point of the space perturbed by the motion of the wing shown in figures 13 and 14. In particular, the velocity potential may be evaluated at any point of the wing surface.

All the results are valid when the contour of the wing is piecewise smooth.

If the frequency of the oscillations of the wing, ω, be put equal to zero, then the coefficients ϑ_0, $\vartheta_0^{(2)}$, . . ., $\vartheta_0^{(k)}$, . . . coincide, respectively, with the values of $\partial\varphi_0/\partial z$ in δ_1, δ_2, . . ., δ_k, . . . for steady motion when the streamline condition (1.6) is given on the wing as $\partial\varphi_0/\partial z = A_1(x,y)$.

We apply the proposed method of determining $\partial\varphi_1/\partial z$ for the oscillating motion of a wing by constructing an integral equation, to wings of completely arbitrary plan form. For example, the wing contour may not be cambered but may have the shape shown in figures 18, 24, etc.

In all cases, the part of the x,y-plane where $\partial\varphi_1/\partial z$ must be determined should be divided into the corresponding characteristic regions. Then successively passing downstream from one region to another, construct the integral and integro-differential equations using the boundary conditions on the x,y-plane. The solution of these equations for $\partial\varphi_1/\partial z$ or for functions related to $\partial\varphi_1/\partial z$ is obtained as a series in even powers of the parameter λ, which defines the frequency of oscillation. The whole problem of determining the coefficients of the expansion reduces to a double integral equation in each characteristic region. Each of the equations after transformation appears to be an equation of the same type which is solved by means of a double application of the inversion formula for the Abel integral equation. The form of the wing contour is the limits of integration. The influence on the considered region, of determining

the desired function in the preceding upstream characteristic region, is reflected in the form of the function in the right side of the integral equations.

8. FLOW AROUND AN OSCILLATING WING OF NON-ZERO THICKNESS

1. Let us consider the motion of a thin wing at a small angle of attack (fig. 15a).

Let the wing be moving forward in a straight line with the constant supersonic velocity u. Let an additional small oscillating motion be superposed on the basic motion of the wing so that the wing surface may be deformed.

The normal velocity component on the upper surface of the wing will be considered given by

$$\varrho_{n\mu} = A_{0u}(x,y) + \text{R.P. } A_{2u}(x,y)e^{i\omega t} \tag{8.1}$$

and on the lower surface by

$$\varrho_{nl} = A_{0l}(x,y) + \text{R.P. } A_{2u}(x,y)e^{i\omega t} \tag{8.2}$$

where A_{0u} and A_{0l} define the wing surfaces and $A_{2u} = A_{1u}(x,y)e^{i\alpha_u(x,y)}$ and $A_{2l} = A_{1l}(x,y)e^{i\alpha_l(x,y)}$ define the amplitude and initial phases of the additional oscillating motion of the wing. We consider the functions A_{0u}, A_{1u} and α_u given at each point of the upper surface and A_{0l}, A_{1l}, and α_l given on the lower surface. The x,y,z coordinates were defined in section 1.

The velocity potential φ_p is

$$\varphi_p(x,y,z,t) = \varphi(x,y,z,t) + \varphi_s(x,y,z,t) \tag{8.3}$$

The potential φ is specified by the motion of an oscillating wing of zero thickness, which creates at each moment an antisymmetric flow with respect to the x,y-plane (fig. 15b). The potential φ_s is specified by the motion of a thin oscillating wing with a profile symmetric relative to the x,y-plane. Therefore the motion proceeds in such a manner that at each moment the wing surface will be symmetric relative to a designated plane (fig. 15c). Such a wing creates a symmetric flow and φ_s satisfies

$$\varphi_s(x,y,-z,t) = \varphi_s(x,y,z,t) \tag{8.4}$$

Each of the potentials φ and φ_s is represented, in its turn, by

$$\varphi = \varphi_0 + \varphi_1 \tag{8.5}$$

$$\varphi_s = \varphi_{0s} + \varphi_{1s} \tag{8.6}$$

where φ_0 and φ_{0s} correspond to the steady motion of the wing and φ_1 and φ_{1s} correspond to the additional motion of the wing.

Let us set up the streamline condition using the representation (8.3) for the velocity potential.

We transfer the boundary conditions on the wing surface parallel to the Oz axis onto the projection Σ of the wing on the x,y-plane (fig. 1).

Therefore, we obtain the streamline conditions based on equations (8.1) and (8.2)

$$\left\{\frac{\partial\varphi_p}{\partial z}\right\}_{z=+0} = A_{0u}(x,y) + \text{R.P. } A_{2u}(x,y)e^{i\omega t} \tag{8.7}$$

and

$$\left\{\frac{\partial\varphi_p}{\partial z}\right\}_{z=-0} = A_{0l}(x,y) + \text{R.P. } A_{2l}(x,y)e^{i\omega t} \tag{8.8}$$

which must be satisfied on the upper and lower sides of Σ, respectively.

Using equations (8.5) and (8.6) we establish boundary conditions for the desired potentials φ_0, φ_1, φ_{0s}, and φ_{1s}.

Keeping in mind that on the $z=0$ plane the normal derivatives of the potentials φ_{0s} and φ_{1s} are specified by the symmetry of the flow over the wing satisfying the condition

$$\left\{\frac{\partial\varphi_{0s}}{\partial z}\right\}_{z=+0} = -\left\{\frac{\partial\varphi_{0s}}{\partial z}\right\}_{z=-0}, \quad \left\{\frac{\partial\varphi_{1s}}{\partial z}\right\}_{z=+0} = -\left\{\frac{\partial\varphi_{1s}}{\partial z}\right\}_{z=-0} \tag{8.9}$$

We find the boundary conditions for φ_{0s} and φ_{1s} which must be satisfied on the upper surface Σ to be

$$\left\{\frac{\partial\varphi_{0s}}{\partial z}\right\}_{z=+0} = \Gamma_0(x,y), \quad \left\{\frac{\partial\varphi_{1s}}{\partial z}\right\}_{z=+0} = \text{R.P. } \Gamma_2(x,y)e^{i\omega t} \tag{8.10}$$

where the functions Γ_0 and Γ_2 are related to quantities given on the wing surface through

$$\Gamma_0(x,y) = \frac{A_{0u}(x,y) - A_{0l}(x,y)}{2} \qquad \Gamma_2(x,y) = \frac{A_{2u}(x,y) - A_{2l}(x,y)}{2} \tag{8.11}$$

The conditions to be satisfied by φ_{0s} and φ_{1s} on the lower surface of Σ are

$$\left\{\frac{\partial\varphi_{0s}}{\partial z}\right\}_{z=-0} = -\Gamma_0(x,y), \quad \left\{\frac{\partial\varphi_{1s}}{\partial z}\right\}_{z=-0} = -\text{R.P. } \Gamma_2(x,y)e^{i\omega t} \tag{8.12}$$

Since the normal derivative of the potentials φ_0 and φ_1 specified by the antisymmetric flow over the wing, on the $z=0$ plane, satisfy

$$\left\{\frac{\partial\varphi_0}{\partial z}\right\}_{z=+0} = \left\{\frac{\partial\varphi_0}{\partial z}\right\}_{z=-0}, \quad \left\{\frac{\partial\varphi_1}{\partial z}\right\}_{z=+0} = \left\{\frac{\partial\varphi_1}{\partial z}\right\}_{z=-0} \tag{8.13}$$

the boundary conditions which must be satisfied simultaneously on the upper and lower surfaces of Σ are

$$\frac{\partial\varphi_0}{\partial z} = A_0(x,y) \qquad \frac{\partial\varphi_1}{\partial z} = \text{R.P. } A_2(x,y)e^{i\omega t} \tag{8.14}$$

where A_0 and A_2 are related to quantities given on the wing through

$$A_0 = \frac{A_{0u} + A_{0l}}{2} \qquad A_2 = \frac{A_{2u} + A_{2l}}{2} \tag{8.15}$$

The boundary problems for $\varphi_1(x,y,z,t)$ and $\varphi_0(x,y,z)$ were set up in section 1 where in the case of a harmonically oscillating wing, equation (8.14) rather than equation (1.6) should be taken on the wing. The solution of these boundary problems is contained in the present work.

Let us formulate the boundary problems for φ_{1s} and φ_{0s}:

I. Find $\varphi_{1s}(x,y,z,t)$ satisfying equation (1.4), condition (1.11) on the disturbance wave, condition (8.10) on the plane region Σ and

$$\frac{\partial\varphi_{1s}}{\partial z} = 0 \tag{8.16}$$

everywhere in the x,y-plane off Σ where the medium is perturbed.

II. Find the function $\varphi_{0s}(x,y,z)$ satisfying equation (1.5), condition (1.11) on the disturbance wave, condition (8.10) in the plane region Σ, and

$$\frac{\partial\varphi_{0s}}{\partial z} = 0 \tag{8.17}$$

everywhere off Σ in the x,y-plane where the medium is perturbed.

Since the potentials φ_{1s} and φ_{0s} are functions which are symmetric relative to the x,y-plane, it is sufficient to solve the problem for the upper half-space.

The solution of boundary problem I is given by equation (4.2). By means of this formula it is possible to compute the velocity potential φ_{1s} everywhere since in the case of symmetric flow over a wing the derivative $\partial\varphi_{1s}/\partial z$ is a given quantity for any point $M(x,y,z)$ of the space in the region of integration $S(x,y,z)$. To compute φ_{1s} at M according to equation (4.2) the function

$$\left\{\frac{\partial\varphi_{1s}}{\partial z}\right\}_{z=+0} = \text{R.P. } \Gamma_2(x,y)e^{i\omega t}$$

must be substituted for $\left\{\frac{\partial\varphi_1}{\partial z}\right\}_{z=0}$ and integration is over that part of the wing within the characteristic cone from M.

The solution of boundary problem II as is known (refs. 21 and 22), is given by formula (3.10) if the function $\left\{\frac{\partial\varphi_0}{\partial z}\right\}_{z=0}$ is replaced by $\left\{\frac{\partial\varphi_{0s}}{\partial z}\right\}_{z=+0} = \Gamma_0(x,y)$ and integration is also over the region defined immediately above.

If the wing is vibrating as a rigid body then the functions A_{2u} and A_{2l} coincide and therefore, to solve the flow problem in this case, it is sufficient in antisymmetric streams excited by the motion of an oscillating wing with profile of zero thickness to superpose steady symmetric streams.

PART II[3]

To apply the integral equations method explained in Part I of the present work, let us consider the problem of the flow over thin wings of finite span in steady supersonic flow.

The velocity potential φ_0 specified by the steady motion of the wing may be computed through equation (3.10) at those points $M(x_1,y_1,z_1)$ of the space for which the region of integration $S(x_1,y_1,z_1)$, already known from Part I, does not extend outside the limits of the wing where $\frac{\partial\varphi_0}{\partial z_1}$ is given.

If $\partial\varphi_0/\partial z_1$ appears to be unknown at any part of S, then, to use equation (3.10) in these cases, where it has in the characteristic coordinates (6.3) the form

$$\varphi_0(x_1,y_1,z_1) = -\frac{1}{2\pi} \iint\limits_{S(x_1,y_1,z_1)} \left\{\frac{\partial\varphi_0}{\partial z_1}\right\}_{z_1=0} \frac{d\eta_1\, d\xi_1}{\sqrt{(x_1-\xi_1)(y_1-\eta_1)-z_1^2}} \tag{21.1}$$

and to obtain the effective solution of the problem, it is necessary, first of all, to find $\partial\varphi_0/\partial z_1$ everywhere in S by constructing and solving an integral equation.

1. INFLUENCE OF THE TIP EFFECT FOR STEADY WING MOTION

1. The integral equation (5.1) in the coordinates (6.3) is, for the steady wing motion

$$\iint\limits_{\sigma(x_1,y_1)} \theta_1(x_1,y_1) \frac{d\eta_1\, d\xi_1}{\sqrt{(x_1-\xi_1)(y_1-\eta_1)}} F(x_1,y_1) \tag{21.2}$$

[3]The results of Part II, sections 1, 2, and 3 were completed in April, 1948 at the Math. Inst. of the Acad. of Science, USSR.

where θ_1 is the value of $\partial\varphi_0/\partial z_1$ on Σ_3 (fig. 6) and where the known function is

$$F(x_1,y_1) = -\iint_{s(x_1,y_1)} A(\xi_1,\eta_1)\,\frac{d\eta_1\,d\xi_1}{\sqrt{(x_1-\xi_1)(y_1-\eta_1)}} \tag{21.3}$$

The function A given on the wing is

$$A(x_1,y_1) = \frac{\partial\varphi_0}{\partial z_1} = -\frac{u\beta_0(x,y)}{k} = -\frac{u}{k}\left\{\frac{x_1+y_1}{2};\ \frac{y_1-x_1}{2k}\right\} \tag{21.4}$$

It is easy to see that the velocity of the perturbed flow $\frac{\partial\varphi_0}{\partial z}$ normal to the x,y-plane is related to $\partial\varphi_0/\partial z_1$ through

$$\frac{\partial\varphi_0}{\partial z} = k\,\frac{\partial\varphi_0}{\partial z_1}$$

The regions of integration in σ are $x_{1E} \leqq \xi_1 \leqq x_1$ and $\psi(\xi_1) \leqq \eta_1 \leqq y_1$ where, as before, $y_1 = \psi(x_1)$ is the equation of the wing tip ED in the transformed coordinates and x_{1E} is the abscissa of E in the same coordinates. The regions of integration for ξ_1 in s are the same limits $x_{1E} \leqq \xi_1 \leqq x_1$ and $\psi_1(\xi_1) \leqq \eta_1 \leqq \psi(\xi_1)$ where $y_1 = \psi_1(x_1)$ is the equation of the leading edge E'E of the wing contour.

Let us note that equation (21.2) may also be obtained from equation (6.5) if the frequency ω of the wing oscillation is set equal to zero in it.

Let us delete the index "1" from the independent variables.

We solve the double integral equation (21.2) with respect to θ, by means of a repeated application of the inversion formula for Abel's integral equation.

We write equation (21.2) as

$$\int_{x_E}^{x} \frac{1}{\sqrt{x - \xi}} \left\{ \int_{\psi(\xi)}^{y} \frac{\theta_1(\xi,\eta)}{\sqrt{y - \eta}} d\eta + \int_{\psi_1(\xi)}^{\psi(\xi)} \frac{A(\xi,\eta)}{\sqrt{y - \eta}} d\eta \right\} d\xi = 0 \tag{21.5}$$

This is an Abel equation with right side identically zero, therefore, the brace equals zero for $\xi = x$. Hence, equation (21.5) is equivalent to

$$\int_{\psi(x)}^{y} \frac{\theta_1(x,\eta)}{\sqrt{y - \eta}} d\eta = - \int_{\psi_1(x)}^{\psi(x)} \frac{A(x,\eta)}{\sqrt{y - \eta}} d\eta \tag{21.6}$$

which is also an Abel equation. Noting that the right side of equation (21.6) is, generally speaking, different from zero for $y = \psi(x)$ we find the solution using the well-known inversion formula for the Abel equation

$$\theta_1(x,y) = \frac{1}{\pi} \frac{1}{\sqrt{y - \psi(x)}} \left[- \int_{\psi_1(x)}^{\psi(x)} \frac{A(x,\eta)}{\sqrt{y - \eta}} d\eta \right]_{y = \psi(x)} +$$

$$\frac{1}{\pi} \int_{\psi(x)}^{y} \frac{1}{\sqrt{y - \eta}} \frac{\partial}{\partial \eta} \left[- \int_{\psi_1(x)}^{\psi(x)} \frac{A(x,\eta')}{\sqrt{\eta - \eta'}} d\eta' \right] d\eta \tag{21.7}$$

Let us note that the solution (21.7) for the steady motion of a wing may be obtained from the solution (6.22) of equation (6.12) for the vibrating wing if the index n and the frequency of oscillation ω are both set equal to zero.

Carrying out the operations specified on the right side of equation (21.7) we find the solution of equation (21.2) to be

$$\theta_1(x,y) = - \frac{1}{\pi} \frac{1}{\sqrt{y - \psi(x)}} \int_{\psi_1(x)}^{\psi(x)} A(x,\eta) \frac{\sqrt{\psi(x) - \eta}}{y - \eta} d\eta \tag{21.8}$$

In a similar manner, we find the value $\frac{\partial \varphi_0}{\partial z} = \theta_1'(x,y)$ in Σ_3' (fig. 6)

$$\theta_1'(x,y) = -\frac{1}{\pi}\frac{1}{\sqrt{x - \bar{\psi}_2(y)}}\int_{\bar{\psi}_1(y)}^{\bar{\psi}_2(y)} A(\xi,y)\frac{\sqrt{\bar{\psi}_2(y) - \xi}}{\sqrt{x - \xi}}\,d\xi \qquad (21.9)$$

The functions $x = \bar{\psi}_1(y)$ and $x = \bar{\psi}_2(y)$ are, respectively, the equations of the arcs ED and E'D' of the wing contour solved for x. The solutions (21.8) and (21.9) show that the velocity of the perturbed stream, when the arcs ED and E'D' are approached from off the wing, goes to infinity as $R^{-\frac{1}{2}}$ where R is the distance of N(x,y,0) from the points ED or E'D' (see fig. 7).

2. Let us find the velocity potential according to equation (21.1) at the point M(x,y,z) of space for which the region of integration S intersects the wing surface Σ and the region Σ_3 or Σ_3'.

The region of integration S in equation (21.1) is divided into three parts: $S = s_1 + s_2 + s_0$, as shown in figure 16

$$\varphi_0(x,y,z) = -\frac{1}{2\pi}\iint_{s_0+s_2} A(\xi,\eta)\frac{d\eta\,d\xi}{\sqrt{(x - \xi)(y - \eta)}} -$$

$$\frac{1}{2\pi}\iint_{s_1} \theta_1(\xi,\eta)\frac{d\eta\,d\xi}{\sqrt{(x - \xi)(y - \eta)}} \qquad (21.10)$$

The limits of region s_1 are $x_E \leqq \xi \leqq x_A$ and $\psi(\xi) \leqq \eta \leqq y - \frac{z^2}{x - \xi}$ where x_A is the coordinate of the point A which is the intersection of the characteristic forecone from M with the side edge ED of the wing. The equation $\eta = y - z^2/x - \xi$ is the equation of the hyperbola in which the aforementioned cone intersects the z=0 plane. The limits of region s_2 are $x_E \leqq \xi \leqq x_A$ and $\psi_1(\xi) \leqq \eta \leqq \psi(\xi)$.

Using equation (21.8), let us evaluate the integral over s_1 in equation (21.10)

$$I = \iint_{s_1} \theta_1(\xi,\eta) \frac{d\eta\, d\xi}{\sqrt{(x - \xi)(y - \eta)}}$$

$$= - \frac{1}{\pi} \int_{x_E}^{x_A} \int_{\psi(\xi)}^{y - \frac{z^2}{x-\xi}} \left\{ \int_{\psi_1(\xi)}^{\psi(\xi)} \frac{A(\xi,\eta')\sqrt{\psi(\xi) - \eta'}}{\sqrt{\eta - \psi(\xi)}(\eta - \eta')} d\eta' \right\} \frac{d\eta\, d\xi}{\sqrt{(x - \xi)(y - \eta) - z^2}} \tag{21.11}$$

we interchange the order of integration of η',η

$$I = - \frac{1}{\pi} \int_{x_E}^{x_A} \int_{\psi_1(\xi)}^{\psi(\xi)} A(\xi,\eta') \frac{\sqrt{\psi(\xi) - \eta'}}{\sqrt{z - \xi}} \left\{ \int_{\psi(\xi)}^{y - \frac{z^2}{x-\xi}} \frac{d\eta}{\sqrt{\eta - \psi(\xi)}(\eta - \eta')\sqrt{y - \frac{z^2}{x - \xi} - \eta}} \right\} d\eta'\, d\xi \tag{21.12}$$

The result of the inner integration is

$$I^* = \int_{\psi(\xi)}^{y - \frac{z^2}{x-\xi}} \frac{d\eta}{\sqrt{\eta - \psi(\xi)}(\eta - \eta')\sqrt{y - \frac{z^2}{x - \xi} - \eta}}$$

$$= \frac{\pi}{\sqrt{\psi(\xi) - \eta'}\sqrt{y - \frac{z^2}{x - \xi} - \eta'}} \tag{21.13}$$

Putting the value of equation (21.13) into equation (21.12) we obtain

$$I = - \iint_{s_2} A(\xi,\eta') \frac{d\eta\, d\xi}{\sqrt{(x - \xi)(y - \eta) - z^2}} \tag{21.14}$$

Equating (21.14) and (21.11) we obtain

$$\iint_{s_1} \theta_1(\xi,\eta) \frac{d\eta\, d\xi}{\sqrt{(x-\xi)(y-\eta)-z^2}} = -\iint_{s_2} A(\xi,\eta) \frac{d\eta\, d\xi}{\sqrt{(x-\xi)(y-\eta)-z^2}} \tag{21.15}$$

Therefore, to find the velocity potential, on the basis of equation (21.1), at a point $M(x,y,z)$ projected onto $M'(x,y,0)$ in the x,y-plane as shown in figure 16, it is sufficient to integrate over s_0

$$\varphi_0(x,y,z) = -\frac{1}{2\pi} \iint_{s_0} A(\xi,\eta) \frac{d\eta\, d\xi}{\sqrt{(x-\xi)(y-\eta)-z^2}} \tag{21.16}$$

The limits of region s_0 are $\psi_1(\xi) \leqq \eta \leqq y - z^2/x-\xi$ and $x_A \leqq \xi \leqq x_B$ where x_B is the abscissa of the point of intersection of the Mach forecone from M with the leading edge $E'E$.

The velocity potential on the wing surface can be calculated from equation (21.16) by setting $z=0$ in it and considering the region of integration to be $x_A \leqq \xi \leqq x$ and $\psi_1(\xi) \leqq \eta \leqq y$ because the lines of intersection of the characteristic forecone from M with the x,y-plane, in this case, are the lines $\xi = x$ and $\eta = y$.

In order to compute the velocity potential at points of space, or in particular, on the surface of the wing for which the region of integration S intersects simultaneously Σ_3 and Σ_3'; that is, at points of space where there is felt the effect of both side edges ED and $E'D'$, it is sufficient to integrate equation (21.1) over the region $s = S_{\oplus} + S_{\ominus}$, the cross-hatched region in figure 17. Hence the integral over $S_{\ominus}$ in equation (21.1) must be taken with the opposite sign, i.e., the plus sign.

3. Let us consider the wing of more general form shown in figure 18. Let the forward part of the wing have the break, the arc $EGG'E_1'$, in the wing contour which affects the flow just as do the side edges.

Let us show how to compute the velocity potential at all points $M(x,y,z)$ of the space disturbed by the motion of the wing, which is not affected by the trailing vortex sheet, in particular, on all points of the wing surface.

We divide the wing surface into the characteristic regions shown in figure 18.

If the region of integration S in equation (21.1) intersects regions 2, 2', 3 and does not intersect 4, then the velocity potential may be evaluated by using equation (21.16) (see figs. 16 and 17).

The simple result which is expressible by equation (21.16) does not hold in the general case.

If S intersects 4 on the wing, in the curvilinear triangle $K'O_1K$, then according to equation (21.1) $\partial\varphi_0/\partial z$ must first of all be found in the triangle.

Let us express, by equation (21.1), the velocity potential at any point of $K'O_1K$ as equal to zero everywhere outside the wing and the vortex sheet from the wing, hence in $K'O_1K$. Therefore, we arrive at an integral equation of the form of (21.2) for the function $\theta_1^*(x,y) = \partial\varphi_0/\partial z$ in $K'O_1K$ but with a more complicated known function.

Applying the Abel inversion formula twice, we arrive at the solution in the following final form:

$$\theta_1^*(x,y) = -\frac{1}{\pi}\frac{1}{\sqrt{y - \psi(x)}}\int_{\psi_1(x)}^{\psi(x)} \frac{A(x,\eta)\sqrt{\psi(x) - \eta}}{y - \eta}\,d\eta -$$

$$\frac{1}{\pi}\frac{1}{\sqrt{x - \overline{\psi}_2(y)}}\int_{\overline{\psi}_1(y)}^{\overline{\psi}_2(y)} \frac{\overline{A}(\xi,y)\sqrt{\overline{\psi}_2(y) - \xi}}{x - \xi}\,d\xi \qquad (21.17)$$

where $y = \psi(x)$ is the equation of EG, $y = \psi_1(x)$ is the equation of $E'E$; $x = \overline{\psi}_2(y)$ of $E_1'G'$ and $x = \overline{\psi}_{12}(y)$ of $E_1'E$.

Substituting equations (21.17), (21.8), and (21.9) into equation (21.1) we obtain the formula for the velocity potential at M which has the projection M' shown on figure 18, and for which the region S intersects 4 on the wing and, therefore, the region $K'O_1K$ outside the wing, as

$$\varphi_0(x,y,z) = -\frac{1}{2\pi} \iint_{S^*(x,y,z)} A(\xi,\eta) \frac{d\eta\, d\xi}{\sqrt{(x-\xi)(y-\eta) - z^2}} +$$

$$\frac{1}{\pi^2} \iint_{S_1^*} \frac{A(\xi,\eta)}{\sqrt{(x-\xi)(y-\eta) - z^2}} \tan^{-1} \sqrt{\frac{\left[\psi^*(\xi) - \psi(\xi)\right]\left[(x-\xi)(y-\eta) - z^2\right]}{\left[\psi(\xi) - \eta\right]\left\{(x-\xi)\left[y - \psi^*(\xi)\right] - z^2\right\}}}\, d\eta\, d\xi +$$

$$\frac{1}{\pi^2} \iint_{S_2^*} \frac{A(\xi,\eta)}{\sqrt{(x-\xi)(y-\eta) - z^2}} \tan^{-1} \sqrt{\frac{\left[\bar{\psi}^*(\eta) - \bar{\psi}_2(\eta)\right]\left[(x-\xi)(y-\eta) - z^2\right]}{\left[\psi_2(\eta) - \xi\right]\left\{(y-\eta)\left[x - \bar{\psi}^*(\eta)\right] - z^2\right\}}}\, d\xi\, d\eta \tag{21.18}$$

where $y = \psi^*(x)$ and $x = \bar{\psi}^*(y)$ are the equations of GG' of the wing contour in terms of x and y, respectively.

The region S^* is the part of the wing shown cross-hatched in figure 18. The regions S_1^* and S_2^* are part of S^* and are marked in the same figure by horizontal stripes. The regions S_1^* and S_2^* are bounded downstream by lines parallel to the coordinate axes passing through G and G'. The points G and G' are respectively the points with the largest x and y coordinate on the arc $EGG'E_1'$.

By combining the results of equations (21.1) and (21.18) there is found in the form of integrals taken over the wing surface, an effective expression for the velocity potential at points of space for which S in equation (21.1) intersects 5 or 6 on the wing and therefore $\Delta K'O_1K$ and Σ_3 and Σ_3' off the wing.

2. FLOW OVER WINGS OF SMALL SPAN

1. Let us assume that the characteristic cones from E_1 and E_1' intersect the wing as shown in figure 19. This occurs, for example, for small span wings.

Let us divide the x,y-plane where the medium is disturbed into the regions S_0, S_1, . . ., S_n, ...

The region S_n is an M-shaped region lying between the characteristic cones from E_n and E_n' (or in one of them) and E_{n+1} and E_{n+1}'. In its turn, we divide the part of the x,y-plane to the right and left of the wing into the strips σ_1, σ_2, . . ., σ_n, . . . and σ_1', σ_2', . . ., σ_n', . . ., respectively. The strip σ_n lies between the after cones from E_n and E_{n+1}. Therefore, σ_n is that part of S_n lying to the right of the wing. The coordinates of E and E' with their indices are shown in figure 19. The strip σ_n' is similarly defined.

Let the leading edge $E_1'E_1$ be given as in part I, section 6, by the equation $y = \psi_1(x)$ and the side edges E_1E_{n+1} and $E_1'E_{n+1}'$ by $y = \psi(x)$ and $y = \psi_2(x)$, respectively, or as $x = \bar{\psi}(y)$ and $x = \bar{\psi}_2(y)$ correspondingly.

To compute the velocity potential at M according to equation (21.1) in that part of space (or, in particular, on the wing surface) the region of which intersects S_n of the x,y-plane but not S_{n+1}, we must first of all determine $\partial\varphi_0/\partial z$ off the wing in σ_1, σ_2, σ_3, . . ., σ_n and also in σ_1', σ_2', σ_3', . . ., σ_n', ...

We construct the integral equation for $\partial\varphi_0/\partial z$ in the arbitrary strip σ_k.

Let us express a velocity potential which is equal to zero everywhere off the wing and outside the region of influence of the vortex system from the wing, at N of the σ_k strip (fig. 20) according to the fundamental formula (21.1)

$$\iint_{S(x,y,0)} \left\{\frac{\partial\varphi_0}{\partial z}\right\}_{z=0} \frac{d\eta\, d\xi}{\sqrt{(x - \xi)(y - \eta)}} = 0 \tag{22.1}$$

The limits of integration in S are $x_1 \leqq \xi \leqq x$ and $y_1 \leqq \eta \leqq y$. For convenience in later writing, we make S a rectangle, which is possible since the medium ahead of the wing is not disturbed and $\partial\varphi_0/\partial z$ is zero. The region S is shown in figure 20 bounded by the lines LN, NL_1, L_1O_1 and O_1L.

Let us denote $\partial\varphi_0/\partial z$ by $\theta_1, \theta_2, \ldots, \theta_k, \ldots$ and $\theta_1', \theta_2', \ldots, \theta_k', \ldots$ in the respective regions $\sigma_1, \sigma_2, \ldots, \sigma_k, \ldots$ and $\sigma_1', \sigma_2', \ldots, \sigma_k', \ldots$.

In conformance with this new notation we write equation (22.1) as

$$\int_{x_D}^{x} \frac{1}{\sqrt{x - \xi}} \left\{ \int_{\psi(\xi)}^{y} \frac{\theta_k(\xi,\eta)}{\sqrt{y - \eta}}\, d\eta + \int_{\psi_2(\xi)}^{\psi(\xi)} \frac{A(\xi,\eta)}{\sqrt{y - \eta}}\, d\eta + \right.$$

$$\left. \sum_{i=1}^{i=k-2} \int_{y_i}^{y_{i+1}} \frac{\theta_i'(\xi,\eta)}{\sqrt{y - \eta}}\, d\eta + \int_{y_{k-1}}^{\psi_2(\xi)} \frac{\theta_{k-1}(\xi,\eta)}{\sqrt{y - \eta}}\, d\eta \right\} d\xi = 0 \tag{22.2}$$

Applying the Abel inversion formula twice to equation (22.2) we find θ_k for $k \geqq 2$

$$\theta_k(x,y) = -\frac{1}{\pi}\frac{1}{\sqrt{y - \psi(x)}}\left\{\int_{\psi_2(x)}^{\psi(x)} \frac{A(x,\eta)\sqrt{\psi(x) - \eta}}{y - \eta}\,d\eta + \right.$$

$$\left.\sum_{i=1}^{i=k-2}\int_{y_i}^{y_i+1} \frac{\theta_i'(x,\eta)\sqrt{\psi(x) - \eta}}{y - \eta}\,d\eta + \int_{y_{k-1}}^{\psi_2(x)} \frac{\theta_{k-1}'(x,\eta)\sqrt{\psi(x) - \eta}}{y - \eta}\right\}d\eta \tag{22.3}$$

Correspondingly, for θ_k' we obtain

$$\theta_k'(x,y) = -\frac{1}{\pi}\frac{1}{\sqrt{x - \bar{\psi}_2(y)}}\left\{\int_{\bar{\psi}(y)}^{\bar{\psi}_2(y)} \frac{A(\xi,y)\sqrt{\bar{\psi}_2(y) - \xi}}{x - \xi}\,d\xi + \right.$$

$$\left.\sum_{i=1}^{i=k-2}\int_{x_i}^{x_i+1} \frac{\theta_i(\xi,y)\sqrt{\bar{\psi}_2(y) - \xi}}{x - \xi}\,d\xi + \int_{x_{k-1}}^{\bar{\psi}(y)} \frac{\theta_{k-1}(\xi,y)\sqrt{\bar{\psi}_2(y) - \xi}}{x - \xi}\,d\xi\right\} \tag{22.4}$$

where the terms in equations (22.3) and (22.4) containing the summations are defined only for $k \geqq 3$.

If $\theta_1, \theta_2, \ldots, \theta_{k-1}$ and therefore, $\theta_1', \theta_2', \ldots, \theta_{k-1}'$ are already defined in $\sigma_1', \sigma_2', \ldots, \sigma_{k-1}'$ then we can compute θ_k in σ_k for any k by means of equation (22.3).

The value of $\partial\varphi_0/\partial z$ in σ_1 and σ_1' is determined by solving equations (21.8) and (21.9).

The value of $\partial\varphi_0/\partial z$ in σ_2 is found from equation (22.3) by putting $k = 2$:

$$\theta_2(x,y) = -\frac{1}{\pi}\frac{1}{\sqrt{y - \psi(x)}}\int_{\psi_2(x)}^{\psi(x)} A(x,\eta)\,\frac{\sqrt{\psi(x) - \eta}}{y - \eta}\,d\eta +$$

$$\frac{1}{\pi^2}\frac{1}{\sqrt{y - \psi(x)}}\int_{y_1}^{\psi_2(x)}\int_{\bar{\psi}_1(\eta)}^{\bar{\psi}_2(\eta)} A(\xi,\eta)\,\frac{\sqrt{\psi(x) - \eta}\,\sqrt{\bar{\psi}_2(\eta) - \xi}}{(y - \eta)(x - \xi)\sqrt{x - \bar{\psi}_2(\eta)}}\,d\xi\,d\eta \tag{22.5}$$

We find $\partial\varphi_0/\partial z$ in σ_2' in the same way

$$\theta_2'(x,y) = -\frac{1}{\pi}\frac{1}{\sqrt{x - \bar{\psi}_2(y)}}\int_{\bar{\psi}(y)}^{\bar{\psi}_2(y)} A(\xi,y)\,\frac{\sqrt{\bar{\psi}_2(y) - \xi}}{x - \xi}\,d\xi +$$

$$\frac{1}{\pi^2}\frac{1}{\sqrt{x - \psi_2(y)}}\int_{x_1}^{\bar{\psi}(y)}\int_{\psi_1(\xi)}^{\psi(\xi)} A(\xi,\eta)\,\frac{\sqrt{\bar{\psi}_2(y) - \xi}\,\sqrt{\psi(\xi) - \eta}}{(x - \xi)(y - \eta)\sqrt{y - \psi_1(\xi)}}\,d\eta\,d\xi \tag{22.6}$$

Thus, step by step we compute $\partial\varphi_0/\partial z$ in σ_k.

Using the solution of equation (22.3), we now prove the relation

$$\Omega = \int_{x_1^*}^{x_2^*} \int_{y_1}^{y-z^2/x-\xi} \left\{\frac{\partial\varphi_0}{\partial z}\right\}_{z=0} \frac{d\eta\ d\xi}{\sqrt{(x-\xi)(y-\eta)-z^2}} = 0 \tag{22.7}$$

where x_1^* and x_2^* are any numbers satisfying $x_1 < x_2^* \leqq x_A$ (x_A is the coordinate of the point A shown in fig. 21), $x_1 \leqq x_1^* < x_A$.

For the proof, we write Ω in the equivalent form

$$\Omega = \int_{x_1^*}^{x_2^*} \int_{\psi(\xi)}^{y-\frac{z^2}{x-\xi}} \frac{\theta_k(\xi,\eta)\ d\eta\ d\xi}{\sqrt{(x-\xi)(y-\eta)-z^2}} +$$

$$\int_{x_1^*}^{x_2^*} \int_{\psi_2(\xi)}^{\psi(\xi)} \frac{A(\xi,\eta)\ d\eta\ d\xi}{\sqrt{(x-\xi)(y-\eta)-z^2}} +$$

$$\sum_{i=1}^{i=k-2} \int_{x_1^*}^{x_2^*} \int_{y_i}^{y_{i+1}} \frac{\theta_i'(\xi,\eta)\ d\eta\ d\xi}{\sqrt{(x-\xi)(y-\eta)-z^2}} + \int_{x_1^*}^{x_2^*} \int_{y_{k-1}}^{\psi_2(\xi)} \frac{\theta_{k-1}'(\xi,\eta)\ d\eta\ d\xi}{\sqrt{(x-\xi)(y-\eta)-z^2}} \tag{22.8}$$

where θ_k in the first of the integrals is replaced by its value according to equation (22.3).

Then, we obtain

$$\Omega = -\frac{1}{\pi}\int_{x_1^*}^{x_2^*}\int_{\psi_2(\xi)}^{\psi(\xi)} \frac{A(\xi,\eta')\sqrt{\psi(\xi) - \eta'}}{\sqrt{x - \xi}}\, I^*\, d\eta'\, d\xi -$$

$$\frac{1}{\pi}\sum_{i=1}^{i=k-2}\int_{x_1^*}^{x_2^*}\int_{y_i}^{y_{i+1}} \frac{\theta_i'(\xi,\eta')\sqrt{\psi(\xi) - \eta'}}{\sqrt{x - \xi}}\, I^*\, d\eta'\, d\xi -$$

$$\frac{1}{\pi}\int_{x_1^*}^{x_2^*}\int_{y_{k-1}}^{\psi_2(\xi)} \frac{\theta_{k-1}'(\xi,\eta')\sqrt{\psi(\xi) - \eta'}}{\sqrt{x - \xi}}\, I^*\, d\eta'\, d\xi +$$

$$\int_{x_1^*}^{x_2^*}\int_{\psi_2(\xi)}^{\psi(\xi)} \frac{A(\xi,\eta)\, d\eta\, d\xi}{\sqrt{(x - \xi)(y - \eta) - z^2}} +$$

$$\sum_{i=1}^{i=k-2}\int_{x_1^*}^{x_2^*}\int_{y_i}^{y_{i+1}} \frac{\theta_i'(\xi,\eta)\, d\eta\, d\xi}{\sqrt{(x - \xi)(y - \eta) - z^2}} +$$

$$\int_{x_2^*}^{x_2^*}\int_{y_{k-1}}^{\psi_2(\xi)} \frac{\theta_{k-1}'(\xi,\eta)\, d\eta\, d\xi}{\sqrt{(x - \xi)(y - \eta) - z^2}} \tag{22.9}$$

where I^* denotes the integral (21.13) evaluated before. It is easy to see that all the terms in the right side of equation (22.9) cancel in pairs. Hence, equation (22.7) is proved.

It is also clear that the following holds

$$\int_{y_1^*}^{y_2^*}\int_{x_1}^{x-\frac{z^2}{y-\eta}} \left\{\frac{\partial\varphi_0}{\partial z}\right\}_{z=0} \frac{d\xi\, d\eta}{\sqrt{(x - \xi)(y - \eta) - z^2}} = 0$$

where y_1^* and y_2^* are any numbers satisfying $y_1 \leqq y_1^* < y_B$ and $y_1 < y_2^* \leqq y_B$ (y_B is the coordinate of B shown in fig. 21).

Using equations (22.3) and (22.4) it is possible to prove equations (22.11) and (22.12) correspondingly

$$\int_{x_1^*}^{x_2^*} \int_{\psi(\xi)}^{y^*} \left\{\frac{\partial\varphi_0}{\partial z}\right\}_{z=0} \frac{d\eta\, d\xi}{\sqrt{(x-\xi)(y-\eta)-z^2}}$$

$$= -\frac{2}{\pi} \int_{x_1^*}^{x_2^*} \int_{y_1}^{\psi(\xi)} \frac{\left\{\frac{\partial\varphi_0}{\partial z}\right\}_{z=0}}{\sqrt{(x-\xi)(y-\eta)-z^2}} \tan^{-1}\sqrt{\frac{\left[(x-\xi)(y-\eta)-z^2\right]\left[y^*-\psi(\xi)\right]}{\left[(x-\xi)(y-y^*)-z^2\right]\left[\psi(\xi)-\eta\right]}}\, d\xi\, d\eta \tag{22.11}$$

where y^* may depend on ξ and satisfies $\psi(x_1^*) < y^* \leqq y-\frac{z^2}{x-\xi}$:

$$\int_{y_1^*}^{y_2^*} \int_{\bar{\psi}_2(\eta)}^{x^*} \left\{\frac{\partial\varphi_0}{\partial z}\right\}_{z=0} \frac{d\eta\, d\xi}{\sqrt{(x-\xi)(y-\eta)-z^2}}$$

$$= -\frac{2}{\pi} \int_{y_1^*}^{y_2^*} \int_{x_1}^{\bar{\psi}_2(\eta)} \frac{\left\{\frac{\partial\varphi_0}{\partial z}\right\}_{z=0}}{\sqrt{(x-\xi)(y-\eta)-z^2}} \tan^{-1}\sqrt{\frac{\left[(x-\xi)(y-\eta)-z^2\right]\left[x^*-\bar{\psi}_2(\eta)\right]}{\left[(x-x^*)(y-\eta)-z^2\right]\left[\bar{\psi}_2(\eta)-\xi\right]}}\, d\xi\, d\eta \tag{22.12}$$

where x^* may depend on η and satisfies $\bar{\psi}_2(y_1^*) < x^* \leqq x-\frac{z^2}{y-\eta}$.

The relations (22.10) and (22.12) may be obtained, respectively, from equations (22.7) and (22.11) if the role of the coordinates is interchanged in the latter.

Let us note that the result of a single application of the Abel inversion formula to equation (22.2) or directly to equation (22.1) yields

$$\int_L^N \left\{\frac{\partial\varphi_0}{\partial z}\right\}_{z=0} \frac{d\eta}{\sqrt{y - \eta}} = 0 \tag{22.13}$$

Interchanging the role of the coordinates in equation (22.13) we obtain

$$\int_{L'}^{N'} \left\{\frac{\partial\varphi_0}{\partial z}\right\}_{z=0} \frac{d\xi}{\sqrt{x - \xi}} = 0 \tag{22.14}$$

It is possible to consider equations (22.13) and (22.14) as relations fulfilled along the characteristic lines LN and L'N' in the x,y-plane where y and x are, respectively, the coordinates of N or N' lying off the wing and off the region of influence of the trailing vortex system (fig. 20). The points N and N' lie to the right and left of the wing, respectively. These relations can be useful for computations.

2. Let us turn to the fundamental formula (21.1). Using equations (22.7), (22.10), (22.11), and (22.12) we obtain, by calculation, the formula for the velocity potential φ_0 at $M(x,y,z)$ for which S intersects S_n for any $n > 0$

$$\begin{aligned}
\varphi_0(x,y,z) = &-\frac{1}{2\pi}\iint_{S_\oplus}\frac{A(\xi,\eta)d\eta\,d\xi}{\sqrt{(x-\xi)(y-\eta)-z^2}} + \frac{1}{2\pi}\iint_{S_\ominus}\frac{A(\xi,\eta)d\eta\,d\xi}{\sqrt{(x-\xi)(y-\eta)-z^2}} - \frac{1}{\pi^2}\iint_{S_1^*}\frac{A(\xi,\eta)\Omega_1}{\sqrt{(x-\xi)(y-\eta)-z^2}}d\eta\,d\xi - \frac{1}{\pi^2}\iint_{S_2^*}\frac{A(\xi,\eta)\Omega_2}{\sqrt{(x-\xi)(y-\eta)-z^2}}d\eta\,d\xi - \\
&\frac{1}{\pi^2}\sum_{k=1}^{k=n-3}\int_{x_k}^{x_{k+1}}\int_{\Psi(\xi)}^{\Psi_2(x_A)}\frac{\theta_k(\xi,\eta)\Omega_2}{\sqrt{(x-\xi)(y-\eta)-z^2}}d\eta\,d\xi - \frac{1}{\pi^2}\sum_{k=1}^{k=n-3}\int_{y_k}^{y_{k+1}}\int_{\bar{\Psi}_2(\eta)}^{\bar{\Psi}_2(y_B)}\frac{\theta_k'(\xi,\eta)\Omega_1}{\sqrt{(x-\xi)(y-\eta)-z^2}}d\eta\,d\xi - \\
&\frac{1}{\pi^2}\int_{x_{n-2}}^{\bar{\Psi}[\Psi_2(x_A)]}\int_{\Psi(\xi)}^{\Psi_2(x_A)}\frac{\theta_{n-2}(\xi,\eta)\Omega_2}{\sqrt{(x-\xi)(y-\eta)-z^2}}d\xi\,d\eta - \frac{1}{\pi^2}\int_{y_{n-2}}^{\Psi[\bar{\Psi}(y_B)]}\int_{\bar{\Psi}_2(\eta)}^{\bar{\Psi}(y_B)}\frac{\theta_{n-2}'(\xi,\eta)\Omega_1}{\sqrt{(x-\xi)(y-\eta)-z^2}}d\xi\,d\eta
\end{aligned} \tag{22.15}$$

where the functions Ω_1 and Ω_2 are defined as

$$\Omega_1 = \tan^{-1}\sqrt{\frac{\left[(x - \xi)(y - \eta) - z^2\right]\left[y_B - \psi(\xi)\right]}{\left[(x - \xi)(y - y_B) - z^2\right]\left[\psi(\xi) - \eta\right]}}$$

$$\Omega_2 = \tan^{-1}\sqrt{\frac{\left[(x - \xi)(y - \eta) - z^2\right]\left[x_A - \bar{\psi}_2(\eta)\right]}{\left[(x - x_A)(y - \eta) - z^2\right]\left[\bar{\psi}_2(\eta) - \xi\right]}}$$

and where the regions $S_{\oplus}$ and $S_{\ominus}$ are regions of the wing marked on figure 21. The region $S_1{}^*$ is the vertically-striped region on the wing surface. The region $S_2{}^*$ is the horizontally-striped region of the wing surface. It is clear that $S_1{}^*$ and $S_2{}^*$ intersect each other and $S_{\ominus}$ on the wing.

The region S_1 lies off the wing and is vertically-striped in figure 21. This region is the sum of the regions over which are taken the integrals containing $\theta_k{}'$ for $k=1, 2, \ldots, n-2$ in equation (22.15).

The region S_2 lies off the wing and is horizontally-striped in the figure. All the integrals are evaluated over it which together contain θ_k for $k=1, 2, \ldots, n-2$.

If M is such that S in the basic formula intersects S_n falling in the characteristic cone from E_n and lying outside the cone from $E_n{}'$, then n must be replaced by $n-1$ in the second sum and in the last term of equation (22.15). If S falls inside the cone from $E_n{}'$ and lies outside the cone from E_n then $n-1$ must be substituted for n in the first sum and the penultimate term of equation (22.15).

Let us note that the sums in equation (22.15) are defined for $n > 3$ and the last two terms in equation (22.15) for $n \geqq 3$.

If $n=1$, then the formula for the velocity potential in equation (22.15) is limited to the first two terms. This result was already obtained before.

If $n=2$, the formula in equation (22.15) is limited to the first four terms, the region of integration is shown in figure 22.

Thus, to evaluate the velocity potential, by equation (22.15), at a point $M(x,y,z)$ which has the projection $M'(x,y,0)$ shown in figure 21, it is necessary, first of all, to compute θ_k for $k=1, 2, 3, \ldots, n-2$ by equation (22.3) for $k \geqq 2$ and by equation (21.8) for $k=1$ (θ_k' correspondingly).

As an example we present the expression for the potential for $n=3$ in the expanded form

$$\varphi_0(x,y,z) = -\frac{1}{2\pi}\iint\limits_{S\oplus}\frac{A(\xi,\eta)d\eta\, d\xi}{\sqrt{(x-\xi)(y-\eta)-z^2}} + \frac{1}{2\pi}\iint\limits_{S\ominus}\frac{A(\xi,\eta)d\eta\, d\xi}{\sqrt{(x-\xi)(y-\eta)-z^2}} -$$

$$\frac{1}{\pi^2}\iint\limits_{S_1*}\frac{A(\xi,\eta)\Omega_1}{\sqrt{(x-\xi)(y-\eta)-z^2}}\,d\eta\, d\xi - \frac{1}{\pi^2}\iint\limits_{S_2*}\frac{A(\xi,\eta)\Omega_2\, d\eta\, d\xi}{\sqrt{(x-\xi)(y-\eta)-z^2}} +$$

$$\frac{1}{\pi^3}\int_{y_2}^{\psi_2(x_A)}\int_{x_1}^{\bar{\psi}(\eta)}\int_{\psi_1(\xi)}^{\psi(\xi)}\frac{A(\xi,\eta')\sqrt{\psi(\xi)-\eta'}\,\Omega_2}{\sqrt{\eta-\psi(\xi)}\,(\eta-\eta')\sqrt{(x-\xi)(y-\eta)-z^2}}\,d\eta' d\xi\, d\eta +$$

$$\frac{1}{\pi^3}\int_{x_2}^{\bar{\psi}(y_B)}\int_{y_1}^{\psi_2(\xi)}\int_{\bar{\psi}_1(\eta)}^{\bar{\psi}_2(\eta)}\frac{A(\xi',\eta)\sqrt{\bar{\psi}_2(\eta)-\xi'}\,\Omega_1}{\sqrt{\xi-\bar{\psi}_2(\eta)}\,(\xi-\xi')\sqrt{(x-\xi)(y-\eta)-z^2}}\,d\xi' d\eta\, d\xi$$

(22.16)

The region of integration in the last two integrals over ξ and η are, respectively, the regions S_1 and S_2 lying off the wing and shown striped in figure 23.

Formula (22.15) for the velocity potential contains an n-iterated integral with the integrand an arbitrary given function on the wing: $\partial\varphi_0/\partial z = A(x,y)$.

In the general case, it is not possible to reduce the number of iterations in the computation of equation (22.15) for arbitrary wing-tip shapes since the arbitrary functions ψ, ψ_2, and A all contain the variables of integration. If the functions ψ and ψ_2 are fixed then the wing to be considered has completely determined tips and it is easy to see that all the integrals in equation (22.15) are reduced to double integrals taken over the wing surface with integrands containing the arbitrary given function $A(x,y)$ which defines the form of the wing surface.

Let us turn to the wing of small span which has a break in its leading edge as shown, for example, in figure 24.

The derivative $\partial\varphi_0/\partial z$ may be evaluated in σ_1 and σ_2 by equations (21.8) and (22.3). It is impossible to evaluate $\partial\varphi_0/\partial z$ in σ_3 using equation (22.3) and, therefore, a surface-integral equation must again be constructed which will also reduce to two Abel equations but with more complex right sides than occurred for σ_3 in figure 19.

Hence, we note that it is impossible to construct one formula which would determine $\partial\varphi_0/\partial z$ for all cases, but a single method of solution may be shown to depend on the wing plan form.

The formation of the surface-integral equation for $\partial\varphi_0/\partial z$ is explained above, for each characteristic region. Each of these equations is of the same type, reducing to two Abel equations with different right sides in different cases. In particular, the right side of one of the Abel equations, in some cases, may be identically zero.

3. INFLUENCE OF THE VORTEX SYSTEM FROM THE WING FOR STEADY WING MOTION

1. To study the influence on the air flow of the trailing vortex system in steady motion, it is convenient to operate with the acceleration potential Φ_0 which, in linearized theory, is related to the velocity potential derivatives in the characteristic coordinates through

$$\Phi_0 = u\left\{\varphi_{0x} + \varphi_{0y}\right\} \tag{23.1}$$

Let us turn to the wing shown in figure 25. Let us take a point $M(x,y,0)$ on the wing surface, which lies between the characteristic cones from D and D'. Therefore the trailing edge DT affects M.

Using equation (21.15) the velocity potential at M according to equation (21.1) is

$$\varphi_0(x,y,0) = -\frac{1}{2\pi} \iint\limits_{s=s_1+s_0} \frac{A(\xi,\eta)\, d\eta\, d\xi}{\sqrt{(x-\xi)(y-\eta)}} - \frac{1}{2\pi} \iint\limits_{s_2} \frac{\vartheta(\xi,\eta)\, d\eta\, d\xi}{\sqrt{(x-\xi)(y-\eta)}} \tag{23.2}$$

where the regions $s = s_1 + s_0$ and s_2 are shown in figure 25. The region s_2 belongs to Ω, considered in section 7 of part I and shown in figure 11. We denoted the derivative $\partial\varphi_0/\partial z$ in Ω by ϑ where this derivative is an unknown.

We subject $\partial\varphi_0/\partial z$ to an additional condition, analogous to the Kutta-Joukowsky incompressible-flow condition. We assume that the perturbation velocity potential at the trailing edge - the arcs DT and D'T' of the wing contour (figs. 11 or 25) - and therefore, the specified derivative, is a continuous function. Then the respective conditions are fulfilled:

$$\vartheta\left[x, \chi(x)\right] = A\left[x, \chi(x)\right] \tag{23.3}$$

$$\vartheta\left[x, \chi_2(x)\right] = A\left[x, \chi_2(x)\right] \tag{23.4}$$

where, as above, the function $y = \chi(x)$ is the equation of DT and $y = \chi_2(x)$ is the equation of D'T' of the wing contour.

In order to obtain the acceleration potential Φ_0 at M on the wing surface, we must take the derivative of equation (23.2) in a direction parallel to the oncoming stream. Before differentiating the double integral with respect to x and y we integrate by parts - in the first case with respect to ξ, in the second with respect to η.

During these operations, we use equation (23.3) and the relation (22.13) which is fulfilled along characteristic lines, and which on the line DD* (fig. 25) is

$$\int_{\chi(x_D)}^{y} \frac{\theta_1(x_D,\eta)}{\sqrt{y - \eta}}\, d\eta = - \int_{\psi_1(x_D)}^{\chi(x_D)} \frac{A(x_D,\eta)}{\sqrt{y - \eta}}\, d\eta \tag{23.5}$$

We keep in mind, moreover, that the limits of integration of s_1 are $x_D \leqq \xi \leqq x_A$ and $\chi(\xi) \leqq \eta \leqq \psi_1(\xi)$ where x_D is the abscissa of D and $x_A = x_A(y)$ is the abscissa of A, the limits of s_0 are $x_A \leqq \xi \leqq x$ and $\psi_1(\xi) \leqq \eta \leqq y$ and finally the limits of s_2 are $x_D \leqq \xi \leqq x_A$ and $\chi(\xi) \leqq \eta \leqq y$.

After the specified operations, the results of differentiation are

$$\begin{aligned}\varphi_{0x}(x,y) + \varphi_{0y}(x,y) = &- \frac{1}{2\pi} \iint_{s_1+s_0} \frac{A_\xi(\xi,\eta) + A_\eta(\xi,\eta)}{\sqrt{(x - \xi)(y - \eta)}}\, d\eta\, d\xi - \\ &\frac{1}{2\pi} \iint_{s_2} \frac{\vartheta_\xi(\xi,\eta) + \vartheta_\eta(\xi,\eta)}{\sqrt{(x - \xi)(y - \eta)}}\, d\eta\, d\xi - \\ &\frac{1}{2\pi} \int_l \frac{A\left[\xi, \psi_1(\xi)\right]}{\sqrt{(x - \xi)\left[y - \psi_1(\xi)\right]}} \left\{1 - \frac{d\psi_1(\xi)}{d\xi}\right\} d\xi\end{aligned} \tag{23.6}$$

(23.6)

where the arc $l = RP$ is shown in figure 25. In order to evaluate the acceleration potential Φ_0 at M according to equation (23.6) it is first of all necessary to determine $\vartheta_x + \vartheta_y$ in s_2.

2. Let us construct the integral equation for $\vartheta_x + \vartheta_y$. Let us express the accleration potential through equation (21.1) at an arbitrary point $N(x,y,0)$ outside the wing in Ω affected by the vortex sheet trailing from the wing

$$\varphi_0(x,y,0) = -\frac{1}{2\pi}\iint_{s(x,y)} \frac{A(\xi,\eta)}{\sqrt{(x-\xi)(y-\eta)}}\,d\eta\,d\xi - \frac{1}{2\pi}\iint_{\sigma(x,y)} \frac{\vartheta(\xi,\eta)}{\sqrt{(x-\xi)(y-\eta)}}\,d\eta\,d\xi \tag{23.7}$$

for which the limits of integration in σ are $x_D \leqq \xi \leqq x$ and $\chi(\xi) \leqq \eta \leqq y$ and in s, ξ varies between the same limits but η between $\psi_1(\xi) \leqq \eta \leqq \chi(\xi)$ (fig. 26).

Let us differentiate this expression in the free-stream direction. Since, according to the condition ((1.10) of part I) the velocity potential φ_0 off the wing in the x,y-plane remains constant along lines in the specified direction, then the left side of equation (23.7) goes to zero as a result of differentiation and therefore we obtain

$$\frac{\partial}{\partial x}\int_{x_D}^{x}\int_{\psi_1(\xi)}^{\chi(\xi)} \frac{A(\xi,\eta)}{\sqrt{(x-\xi)(y-\eta)}}\,d\eta\,d\xi + \frac{\partial}{\partial x}\int_{x_D}^{x}\int_{\chi(\xi)}^{y} \frac{\vartheta(\xi,\eta)}{\sqrt{(x-\xi)(y-\eta)}}\,d\eta\,d\xi + \frac{\partial}{\partial y}\int_{x_D}^{x}\int_{\psi_1(\xi)}^{\chi(\xi)} \frac{A(\xi,\eta)}{\sqrt{(x-\xi)(y-\eta)}}\,d\eta\,d\xi + \frac{\partial}{\partial y}\int_{x_D}^{x}\int_{\chi(\xi)}^{y} \frac{\vartheta(\xi,\eta)}{\sqrt{(x-\xi)(y-\eta)}}\,d\eta\,d\xi = 0 \tag{23.8}$$

We integrate the first two integrals in equation (23.8) by parts with respect to ξ, after which we differentiate with respect to x. The result is

$$\frac{\partial}{\partial x}\int_{x_D}^{x}\int_{\psi_1(\xi)}^{\chi(\xi)}\frac{A(\xi,\eta)}{\sqrt{(x-\xi)(y-\eta)}}\,d\eta\,d\xi = \frac{1}{\sqrt{x-x_D}}\int_{\psi_1(x)}^{\chi(x_D)}\frac{A(x_D,\eta)}{\sqrt{y-\eta}}\,d\eta +$$

$$\int_{x_D}^{x}\frac{1}{\sqrt{x-\xi}}\frac{\partial}{\partial\xi}\left\{\int_{\psi_1(\xi)}^{\chi(\xi)}\frac{A(\xi,\eta)}{\sqrt{y-\eta}}\,d\eta\right\}d\xi \tag{23.9}$$

and

$$\frac{\partial}{\partial x}\int_{x_D}^{x}\int_{\chi(\xi)}^{y}\frac{\theta(\xi,\eta)}{\sqrt{(x-\xi)(y-\eta)}}\,d\eta\,d\xi = \frac{1}{\sqrt{x-x_D}}\int_{\chi(x_D)}^{y}\frac{\vartheta(x_D,\eta)}{\sqrt{y-\eta}}\,d\eta +$$

$$\int_{x_D}^{x}\frac{1}{\sqrt{x-\xi}}\frac{\partial}{\partial\xi}\left\{\int_{\chi(\xi)}^{y}\frac{\vartheta(\xi,\eta)}{\sqrt{y-\eta}}\,d\eta\right\}d\xi \tag{23.10}$$

Keeping equation (23.5) in mind, which is fulfilled on the characteristic DD* we substitute equations (23.10) and (23.9) into equation (23.8) obtaining

$$\int_{x_D}^{x}\frac{1}{\sqrt{x-\xi}}\left\{\frac{\partial}{\partial\xi}\int_{\chi(\xi)}^{y}\frac{\vartheta(\xi,\eta)}{\sqrt{y-\eta}}\,d\eta + \frac{\partial}{\partial\xi}\int_{\psi_1(\xi)}^{\chi(\xi)}\frac{A(\xi,\eta)}{\sqrt{y-\eta}}\,d\eta +\right.$$

$$\left.\frac{\partial}{\partial y}\int_{\chi(\xi)}^{y}\frac{\vartheta(\xi,\eta)}{\sqrt{y-\eta}}\,d\eta + \int_{\psi_1(\xi)}^{\chi(\xi)}\frac{A(\xi,\eta)}{\sqrt{y-\eta}}\,d\eta\right\}d\xi = 0 \tag{23.11}$$

This equation is equivalent to

$$\frac{\partial}{\partial x}\int_{\chi(x)}^{y}\frac{\vartheta(x,\eta)}{\sqrt{y-\eta}}\,d\eta+\frac{\partial}{\partial x}\int_{\psi_1(x)}^{\chi(x)}\frac{A(x,\eta)}{\sqrt{y-\eta}}\,d\eta+$$

$$\frac{\partial}{\partial y}\int_{\chi(x)}^{y}\frac{\vartheta(x,\eta)}{\sqrt{y-\eta}}\,d\eta+\frac{\partial}{\partial y}\int_{\psi_1(x)}^{\chi(x)}\frac{A(x,\eta)}{\sqrt{y-\eta}}\,d\eta=0 \qquad (23.12)$$

according to the inversion of the Abel integral equation.

We integrate the last two integrals in equation (23.12) by parts with respect to η after which, as above, we differentiate with respect to the parameter. Using equation (23.3) we arrive at

$$\int_{\chi(x)}^{y}\frac{\vartheta_x(x,\eta)+\vartheta_\eta(x,\eta)}{\sqrt{y-\eta}}\,d\eta=-\int_{\psi_1(x)}^{\chi(x)}\frac{A_x(x,\eta)+A_\eta(x,\eta)}{\sqrt{y-\eta}}\,d\eta-$$

$$\frac{A\left[x,\psi_1(x)\right]}{\sqrt{y-\psi_1(x)}}\left\{1-\frac{d\psi_1(x)}{dx}\right\} \qquad (23.13)$$

Let us apply once again Abel's inversion formula, keeping in mind that the right side of equation (23.13), generally speaking, is different from zero for $y=\chi(x)$ we obtain the solution for $\vartheta_x+\vartheta_y$ as

$$\vartheta_x(x,y)+\vartheta_y(x,y)=-\frac{1}{\pi}\frac{1}{\sqrt{y-\chi(x)}}\int_{\psi_1(x)}^{\chi(x)}\left\{A_x(x,\eta)+\right.$$

$$\left.A_\eta(x,\eta)\right\}\frac{\sqrt{\chi(x)-\eta}}{y-\eta}\,d\eta-\frac{1}{\pi}\frac{1}{\sqrt{y-\chi(x)}}A\left[x,\psi_1(x)\right]\left\{1-\frac{d\psi_1(x)}{dx}\right\}\frac{\sqrt{\chi(x)-\psi_1(x)}}{y-\psi_1(x)}$$

(23.14)

Using equation (23.14) we prove

$$\iint_{s_2} \frac{\vartheta_\xi(\xi,\eta) + \vartheta_\eta(\xi,\eta)}{\sqrt{(x - \xi)(y - \eta)}}\, d\eta\, d\xi = -\iint_{s_1} \frac{A_\xi(\xi,\eta) + A_\eta(\xi,\eta)}{\sqrt{(x - \xi)(y - \eta)}}\, d\eta\, d\xi$$

$$- \int_{l_1} \frac{A[\xi,\psi(\xi)]}{\sqrt{(x - \xi)[y - \psi_1(\xi)]}} \left\{1 - \frac{d\psi_1(\xi)}{d\xi}\right\} d\xi \tag{23.15}$$

where $l_1 = RQ$. The regions s_2 and s_1 are shown in figure 25.

Substituting equation (23.15) into equation (23.6) we obtain the formula for the acceleration potential

$$\frac{\Phi_0(x,y)}{u} = \varphi_{0x} + \varphi_{0y} = -\frac{1}{2\pi} \iint_{s_0} \frac{A_\xi(\xi,\eta) + A_\eta(\xi,\eta)}{\sqrt{(x - \xi)(y - \eta)}}\, d\eta\, d\xi -$$

$$\frac{1}{2\pi} \int_L \frac{A[\xi,\psi_1(\xi)]}{\sqrt{(x - \xi)[y - \psi_1(\xi)]}} \left\{1 - \frac{d\psi_1(\xi)}{d\xi}\right\} d\xi \tag{23.16}$$

where $L = QP$, the direction of the integration is shown by the arrows in figure 25.

Thus to evaluate the acceleration potential at M on a wing surface two integrals, the surface integral over s_0 and the contour integral over L of the leading edge are to be computed.

Let us turn to equation (23.12) and write it in the form

$$\frac{\partial}{\partial x} \int_{\psi_1(x)}^{y} \left\{\frac{\partial \varphi_0}{\partial z}\right\}_{z=0} \frac{d\eta}{\sqrt{y - \eta}} + \frac{\partial}{\partial y} \int_{\psi_1(x)}^{y} \left\{\frac{\partial \varphi_0}{\partial z}\right\}_{z=0} \frac{d\eta}{\sqrt{y - \eta}} = 0 \tag{23.17}$$

Interchanging the role of the coordinates in equation (23.17) we obtain

$$\frac{\partial}{\partial x}\int_{\bar{\psi}_1(y)}^{x}\left\{\frac{\partial\varphi_0}{\partial z}\right\}_{z=0}\frac{d\xi}{\sqrt{x-\xi}}+\frac{\partial}{\partial y}\int_{\bar{\psi}_1(y)}^{x}\left\{\frac{\partial\varphi_0}{\partial z}\right\}_{z=0}\frac{d\xi}{\sqrt{x-\xi}}=0 \tag{23.18}$$

where $x = \psi_1(y)$ is the equation of E'E of the wing leading edge solved for x in terms of y.

It is possible to consider equations (23.17) and (23.18) as relations which hold along characteristic lines in the x,y-plane where the vortex sheet has effect.

Relation (23.17) is fulfilled along characteristic lines parallel to the Oy-axis (the line NQ on figure 26); the y-parameter is the ordinate of a point lying off the wing to the right, in the effective range of the vortex sheet (point N in fig. 26). Relation (23.18) is fulfilled along lines parallel to the Ox-axis; the x parameter is the abscissa of a point lying off the wing to the left.

If the point N is thus located to the right of the vortex line DH or to the left of D'H', then along characteristic lines the respective relations (22.13) and (22.14) also hold.

If N is located to the left of DH or to the right of D'H', respectively, then relations (23.17) and (23.18) hold along characteristic lines. In this case, equations (22.13) and (22.14) are not fulfilled.

In this section, we wrote down the transformation and obtained the formula for the accleration potential in the simplest case of the vortex sheet affecting the flow.

For any other case, the potential Φ_0 is found in an analogous way. In each case an integral equation is constructed for $\vartheta_x + \vartheta_y$. All the integral equations are of the same type but with different right sides in the different cases, and they are inverted by means of a double application of the Abel integral equation inversion formula.

In the following paragraph we present results defining the acceleration potential Φ_0 at any point of a wing surface.

3. Let us find the velocity potential $\varphi_0(x,y,z)$ at a point M lying within the characteristic aft-cone from D and outside the characteristic aft-cone from D'. The region of integration S in the fundamental formula (21.1) intersects the plane region Ω (fig. 11) in this case.

The projection M' of M on the x,y-plane is shown in figure 26a.

Starting from condition (1.12) (of part I) we express the derivative $\partial\varphi_0/\partial z$ for any point where the velocity potential equals zero and where, simultaneously, the effect of the vortex sheet is felt through the same derivative at points located upstream on the same characteristic line with the point studied. To do this we reason just as we did to obtain formula (21.8). We then obtain the desired representation for the derivative

$$\frac{\partial\varphi_0}{\partial z} = -\frac{1}{\pi}\frac{1}{\sqrt{y - x - y_D + x_D}}\int_{\psi_1(x)}^{x+y_D-x_D}\left\{\frac{\partial\varphi_0(x,\eta,z)}{\partial z}\right\}_{z=0}\frac{\sqrt{x + y_D - x_D - \eta}}{y - \eta}\,d\eta \tag{23.19}$$

Using equation (23.19) it is easy to prove

$$\int_{x_1^*}^{x_2^*}\int_{\xi+y_D-x_D}^{y-\frac{z^2}{x-\xi}}\left\{\frac{\partial\varphi_0}{\partial z}\right\}_{z=0}\frac{d\eta\,d\xi}{\sqrt{(x - \xi)(y - \eta) - z^2}} =$$

$$-\int_{x_1^*}^{x_2^*}\int_{\psi_1(\xi)}^{\xi+y_D-x_D}\left\{\frac{\partial\varphi_0}{\partial z}\right\}_{z=0}\frac{d\eta\,d\xi}{\sqrt{(x - \xi)(y - \eta) - z^2}} \tag{23.20}$$

by the same methods used in proving equation (21.15).

The limits of integration in equation (23.20), x_1^* and x_2^*, are any numbers satisfying $x_D \leqq x_1^* \leqq x_F$ and $x_D \leqq x_2^* \leqq x_F$ where x_F is the coordinate of the point F shown in figure 26a. The point F is the intersection of the vortex line DH, which has the equation $y = x + y_D - x_D$, with the characteristic cone from the point with the coordinates (x,y,z).

In particular, there holds

$$\iint_{S_2} \left\{\frac{\partial\varphi_0}{\partial z}\right\}_{z=0} \frac{d\eta\, d\xi}{\sqrt{(x-\xi)(y-\eta) - z^2}} = -\iint_{S_1} \left\{\frac{\partial\varphi_0}{\partial z}\right\}_{z=0} \frac{d\eta\, d\xi}{\sqrt{(x-\xi)(y-\eta) - z^2}} \tag{23.21}$$

where the regions S_1 and S_2 are shown in figure 26a. The region S_1 is marked with horizontal and the region S_2 with vertical crosslines.

Keeping in mind equation (23.21) we obtain an expression for the velocity potential at the point M defined above

$$\varphi_0(x,y,z) = -\frac{1}{2\pi}\iint_{S_0} \frac{A(\xi,\eta)d\eta\, d\xi}{\sqrt{(x-\xi)(y-\eta) - z^2}} - \frac{1}{2\pi}\iint_{S'} \frac{\vartheta(\xi,\eta)d\eta\, d\xi}{\sqrt{(x-\xi)(y-\eta) - z^2}} \tag{23.22}$$

where S_0 and S' are shown on figure 26a.

Therefore, the region of integration S in equation (23.22) intersects the wing surface only in that part of Ω which lies to the left of the vortex line DH.

Before evaluating the velocity potential by equation (23.22) it is necessary to determine $\partial\varphi_0/\partial z = \vartheta$ in the region S' of Ω.

We find ϑ from the solution (23.14) if the latter is integrated in a free stream direction between $N(x,y)$ and $\bar{N}(\bar{x},\bar{y})$. Hence in order that the obtained expression correspond to the value of the derivative $\partial\varphi_0/\partial z = \vartheta$ in Ω to the left of DH, the coordinates $\bar{x}$ and $\bar{y}$ on the vortex sheet should be taken as the solution of the equations $\bar{y} - \bar{x} - y_D + x_D = 0$ and $\bar{y} = X(\bar{x})$ and the value of $\vartheta(\bar{x},\bar{y})$ is determined from equation (23.3) at the trailing edge.

If the $\bar{x}$ and $\bar{y}$ coordinates are set equal to $\bar{x} = x_D$ and $\bar{y} = y-x+x_D$ and the value of $\vartheta(\bar{x},\bar{y})$ is determined on DH from the solution of equation (21.8) then the obtained expression will correspond to the value of $\partial\varphi_0/\partial z$ in Ω to the right of DH off the vortex sheet but in its sphere of influence.

4. PRESSURE DISTRIBUTION ON A WING SURFACE

1. Let us consider a wing of arbitrary plan form. Let the wing contour in the characteristic coordinates be given by the following equations: The leading edge E'E by $y = \psi(x)$ or $x = \bar{\psi}_1(y)$, the side edges ED and E'D' by $y = \psi(x)$ and $y = \psi_2(x)$ or $x = \bar{\psi}(y)$ and $x = \bar{\psi}_2(y)$, the trailing edges DT' and D'T' by $y = \chi(x)$ and $y = \chi_2(x)$ or $x = \bar{\chi}(y)$ and $x = \bar{\chi}_2(y)$.

Let us find the pressure of the flow on the wing surface.

According to the Bernoulli integral, the pressure difference of the flow above and below the wing is related to the acceleration potential Φ_0 by

$$p(x,y) = p_l(x,y) - p_u(x,y) = 2\rho\Phi_0(x,y) \qquad (24.1)$$

where ρ is the density of the undisturbed flow.

We divide the wing surface into the ten characteristic regions shown in figures 27 and 28.

Let us express the stream pressure on the wing surface in each characteristic region by the function $A(x,y)$ which is given on the wing, defining the shape of the surface.

We denote by M and M with a subscript the ends of line segments parallel to the coordinate axes and lying in the x,y-plane. It is clear that these segments are parts of the lines of intersection of the characteristic cones, with vertices in the x,y-plane, and the x,y-plane itself.

Region I is the region where the tip effect is not felt. This part of the wing lies ahead of the characteristic aft-cones with vertices at E' and E.

Region II is where the tip effect is felt but not the influence of the trailing vortex sheet. This region lies between the characteristic aft-cones from E' and E and D and D'. At M of region II, for which the lines M_1M_3 and M_2M_4 intersect on the wing as shown on figure 27, the pressure difference is

$$p(x,y) = -\frac{u\rho}{\pi}\iint_{S_1} D(\xi,\eta;x,y)d\eta\, d\xi + \frac{u\rho}{\pi}\iint_{S_2} D(\xi,\eta;x,y)d\eta\, d\xi +$$

$$\frac{u\rho}{\pi}\int_L B\left[\xi,\psi_1(\xi);x,y\right]\left\{1 - \frac{d\psi_1(\xi)}{d\xi}\right\} - \frac{u\rho}{\pi}\left\{1 - \frac{d\bar{\psi}(y)}{dy}\right\}\int_{L_1} B\left[\bar{\psi}(y),\eta;x,y\right]d\eta -$$

$$\frac{u\rho}{\pi}\left\{1 - \frac{d\psi_2(x)}{dx}\right\}\int_{L_2} B\left[\xi,\psi_1(x);x,y\right]d\xi \tag{24.2}$$

where S_1 is the region of the wing bounded by the lines MM_1, MM_2, M_1M_3 and M_2M_4, S_2 is the region bounded by M_1M_3, M_2M_4 and the arc $L = M_4M_3$ and where

$$D(\xi,\eta;x,y) = \frac{A_\xi(\xi,\eta) + A_\eta(\xi,\eta)}{\sqrt{(x-\xi)(y-\eta)}} \qquad B(\xi,\eta;x,y) = \frac{A(\xi,\eta)}{\sqrt{(x-\xi)(y-\eta)}}$$

If the lines M_1M_3 and M_2M_4 do not intersect on the wing, as shown in figure 28, then the pressure difference is

$$p(x,y) = -\frac{u\rho}{\pi}\iint_{S_2} D(\xi,\eta;x,y)d\eta\, d\xi - \frac{u\rho}{\pi}\int_L B\left[\xi,\psi_1(\xi);x,y\right]\left\{1 - \frac{d\psi_1(\xi)}{d\xi}\right\}d\xi -$$
$$\frac{u\rho}{\pi}\left\{1 - \frac{d\bar{\psi}(y)}{dy}\right\}\int_{L_1} B\left[\bar{\psi}(y),\eta;x,y\right]d\eta -$$
$$\frac{u\rho}{\pi}\left\{1 - \frac{d\psi_2(x)}{dx}\right\}\int_{L_2} B\left[\xi,\psi_2(x);x,y\right]d\xi \tag{24.3}$$

where S_1 is bounded by the lines MM_1, M_1M_3, MM_2, M_2M_4 and $L = M_3M_4$.

Arrows in the figures show the direction of integration in the contour integral and the integrals taken over the lines $L_1 = M_3M_1$ and $L_2 = M_4M_2$.

In region III, which lies between the characteristic cones from E and the characteristic cones from E', D and D', the pressure difference is

$$p(x,y) = -\frac{u\rho}{\pi}\iint_{S_1} D(\xi,\eta;x,y)d\eta\, d\xi - \frac{u\rho}{\pi}\int_L B\left[\xi,\psi_1(\xi);x,y\right]\left\{1 - \frac{d\psi_1(\xi)}{d\xi}\right\}d\xi -$$
$$\frac{u\rho}{\pi}\left\{1 - \frac{d\bar{\psi}(y)}{dy}\right\}\int_{L_2} B\left[\bar{\psi}(y),\eta;x,y\right]d\eta \tag{24.4}$$

The pressure difference in region III' is expressed in the same way.

$$p(x,y) = -\frac{u\rho}{\pi}\iint_{S_1} D(\xi,\eta;x,y)d\eta\, d\xi -$$

$$\frac{u\rho}{\pi}\int_L B\left[\xi,\psi_1(\xi);x,y\right]\left\{1 - \frac{d\psi_1(\xi)}{d\xi}\right\} d\xi -$$

$$\frac{u\rho}{\pi}\left\{1 - \frac{d\psi_2(x)}{dx}\right\}\int_{L_2} B\left[\xi,\psi_2(x);x,y\right]d\xi \tag{24.5}$$

Region IV lies in the characteristic cones from E and E' and D and outside the characteristic cone from D'. Region IV' is defined correspondingly. At M(x,y) of region IV, when M_1M_3 and M_2M_4 intersect on the wing, the pressure difference is

$$p(x,y) = -\frac{u\rho}{\pi}\iint_{S_1} D(\xi,\eta;x,y)d\eta\, d\xi + \frac{u\rho}{\pi}\iint_{S_2} D(\xi,\eta;x,y)d\eta\, d\xi +$$

$$\frac{u\rho}{\pi}\int_L B\left[\xi,\psi_1(\xi);x,y\right]\left\{1 - \frac{d\psi_1(\xi)}{d\xi}\right\} d\xi -$$

$$\frac{u\rho}{\pi}\left\{1 - \frac{d\psi_2(x)}{dx}\right\}\int_{L_2} B\left[\xi,\psi_2(x);x,y\right]d\xi \tag{24.6}$$

For the M, for which M_1M_3 and M_2M_4 do not intersect on the wing, the pressure difference is expressed by equation (24.5). Similarly, the pressure difference for region IV' is

$$p(x,y) = -\frac{u\rho}{\pi}\iint_{S_1} D(\xi,\eta;x,y)d\eta\, d\xi + \frac{u\rho}{\pi}\iint_{S_2} D(\xi,\eta;x,y)d\eta\, d\xi +$$

$$\frac{u\rho}{\pi}\int_L B\left[\xi,\psi_1(\xi);x,y\right]\left\{1 - \frac{d\psi_1(\xi)}{d\xi}\right\} d\xi -$$

$$\frac{u\rho}{\pi}\left\{1 - \frac{d\bar{\psi}(y)}{dy}\right\}\int_{L_1} B\left[\bar{\psi}(y),\eta;x,y\right]d\eta \tag{24.7}$$

if M_1M_3 and M_2M_4 intersect on the wing. If these lines do not intersect on the wing the pressure difference can be expressed by equation (24.4).

In region V, which lies within the characteristic cones from E, E', D and D' where the influence of the trailing vortex sheet is felt, the pressure difference is

$$p(x,y) = -\frac{u\rho}{\pi}\iint_{S_1} D(\xi,\eta;x,y)d\eta\ d\xi + \frac{u\rho}{\pi}\iint_{S_2} D(\xi,\eta;x,y)d\eta\ d\xi +$$

$$\frac{u\rho}{\pi}\int_L B\left[\xi,\psi_1(\xi);x,y\right]\left\{1 - \frac{d\psi_1(\xi)}{d\xi}\right\} d\xi \tag{24.8}$$

if M_1M_3 and M_2M_4 intersect on the wing, and

$$p(x,y) = -\frac{u\rho}{\pi}\iint_{S_1} D(\xi,\eta;x,y)d\eta\ d\xi - \frac{u\rho}{\pi}\int_L B\left[\xi,\psi_1(\xi);x,y\right]\left\{1 - \frac{d\psi_1(\xi)}{d\xi}\right\} d\xi \tag{24.9}$$

if they do not intersect.

In region VI, lying in the characteristic cones from E and D and outside the characteristic cones from E' and D' (also in region VI') the pressure difference is expressed by equation (24.9). The pressure difference for region I has the same form.

Thus, if M, at which the pressure is desired, is in one of the regions II, IV (IV' correspondingly), or V, as shown in the figures, then to set up the regions and contours of integration in the pressure formulas it is necessary to proceed as follows: Draw two lines MM_1 and MM_2 upstream from M to intersect with the side (or trailing) edges of the wing. From these points of intersection M_1 and M_2 again draw lines M_1M_3 and M_2M_4 upstream to intersect the leading edge E'E at M_3 and M_4.

If M is in region III or VI (III' or VI' correspondingly) then from M draw the lines MM_4 and MM_1 upstream; the line MM_4 immediately intersects the leading edge E'E at M_4; MM_1 intersects the side edge

ED in the case of region III or the trailing edge DT' in the case of region VI. From the point of intersection M_1 again draw the line M_1M_3 to intersect the leading edge E'E.

Let us consider particular cases.

(I) Let the side edges of the wing ED and E'D' be straight lines parallel to the free stream. In this case

$$\frac{\partial\bar{\psi}}{\partial y} = \frac{\partial\psi_2}{\partial x} = 1$$

and, therefore, formulas (24.2) and (24.3) are simplified substantially, because the last two terms in them become zero.

A particular wing of this class is the rectangular wing.

(II) Let the wing surface be such that

$$D(\xi,\eta;x,y) \equiv 0$$

This holds, firstly, when the wing surface is a plane, i.e., the function $A = {}^{-u\beta_0}/k$ is given on the wing, where β_0 is the angle of attack, as a constant.

Secondly, this holds when the wing surface is linear, generally speaking, uncambered, with generators lying in planes parallel to the $y = x$-plane (x,z-plane in the original coordinates), then the derivative of the function $A(x,y)$ given on the wing satisfies the relation $A_x = - A_y$. In particular this is a wing with a cylindrical surface formed in the manner described.

In these cases, only the contour integrals and the integrals over the line segments L_1 and L_2 remain in the formulas for the pressure.

(III) The pressure formulas take an especially simple form when the wing surface is such that the function $D(\xi,\eta;x,y) \equiv 0$ on the wing, at the same time as the side edges ED and E'D' are straight lines parallel to the stream (combination of cases I and II). In this case, the pressure difference above and below the wing in any region can be represented by

$$p(x,y) = \pm \frac{u\rho}{\pi} \int_L B\left[\xi,\psi_1(\xi);x,y\right] \left\{1 - \frac{d\psi_1(\xi)}{d\xi}\right\} d\xi \qquad (24.10)$$

where the plus sign is taken if the lines M_1M_3 and M_2M_4 intersect on the wing and the minus sign if these lines do not intersect on the wing.

Hence, the pressure on the wing surface is expressed by the curvilinear integral taken over the arc L of the wing leading edge.

(IV) Let the wing plan form be such that the points D and E and E' and D' coincide. In this case, calculation of the pressure on the wing surface is also simplified because there are no regions II, III and III' on the wing. In particular, the trapezoidal wing belongs to this case.

2. The pressure formulas show that there can exist a geometrical locus $F^*(x,y) = 0$ where the pressure on the wing $p(x,y) = 0$. Downstream of this geometrical locus, the pressure difference $p = p_l - p_u$ is negative.

For example, if $D(\xi,\eta;x,y) \equiv 0$ on the wing then the geometrical locus $F^* = 0$ is found in the region of the wing lying inside the characteristic cones with vertices E and E' and passing through either regions II and IV or through IV and V or or lying entirely in V. The first case occurs only when K, the intersection of the lines O_1K and O_2K parallel to the coordinate axes, appears to be outside the region of influence of the vortex sheet, as shown in figure 27, for example. In all these cases, the points T and T' are on the geometrical locus of $F^* = 0$. The curve $F^* = 0$ may also be shaped convex downstream and not as shown on the figures.

Let us write the equation for the geometrical locus $F^* = 0$.

In region II:

$$F^*(x,y) = \int_{\bar{\psi}_2[\psi_2(x)]}^{\bar{\psi}(y)} \left\{1 - \frac{d\psi_1(\xi)}{d\xi}\right\} \frac{d\xi}{\sqrt{(x - \xi)\left[y - \psi_1(\xi)\right]}} -$$

$$2\left\{1 - \frac{d\bar{\psi}(y)}{dy}\right\}\sqrt{\frac{y - \psi_1\left[\bar{\psi}(y)\right]}{\sqrt{x - \bar{\psi}(y)}}} - 2\left\{1 - \frac{d\psi_2(x)}{dx}\right\}\sqrt{\frac{x - \psi_1\left[\psi_2(x)\right]}{\sqrt{y - \psi_2(x)}}} = 0$$

(24.11)

In region IV:

$$F^*(x,y) = \int_{\bar{\psi}_1[\psi_2(x)]}^{\bar{\chi}(y)} \left\{1 - \frac{d\psi_1(\xi)}{d\xi}\right\} \frac{d\xi}{\sqrt{(x - \xi)\left[y - \psi_1(\xi)\right]}} -$$

$$2\left\{1 - \frac{d\psi_2(x)}{dx}\right\} \sqrt{\frac{x - \psi\left[\psi_2(x)\right]}{\sqrt{y - \psi_2(x)}}} = 0 \qquad (24.12)$$

In region V:

$$F^*(x,y) = \bar{\psi}_1\left[\chi_2(x)\right] - \bar{\chi}(y) = 0 \qquad (24.13)$$

If the side edges of the wing are lines parallel to the free stream direction or the wing is such that E and D (E' and D' correspondingly) coincide, then $F^* = 0$ takes a simple form. In region V it is not changed, but in regions II and IV, we have, respectively, in place of equations (24.11) and (24.12)

$$F^* = \bar{\psi}_1\left[\psi_2(x)\right] - \bar{\psi}(y) = 0 \qquad (24.14)$$

and

$$F^* = \bar{\psi}_1\left[\psi_2(x)\right] - \bar{\chi}(y) = 0 \qquad (24.15)$$

In all cases when the pressure difference on the wing, according to equations (24.2) to (24.9), is expressed only by means of curvilinear integrals taken over L of the wing contour, it is easy to construct the zero-pressure curve graphically, keeping in mind that the zero-pressure curve in these cases is the geometrical locus of such points M on the wing surface for which the points M_3 and M_4 on the wing contour coincide. That is, the arc on the leading edge over which the curvilinear integral is taken shrinks to a point.

We construct the zero-pressure curve as follows: From each point N_0 on the leading edge we draw the lines N_0N_1 and N_0N_2 parallel to the coordinate axes intersecting the side edges ED and E'D' as shown

in figures 29 and 30, or the trailing edges as shown in figures 31 and 32. From the points of intersection N_1 and N_2 within the wing again we draw lines N_1N^* and N_2N^* parallel to the coordinate axes. The geometrical locus of N^*, where these lines intersect, is the desired zero-pressure line.

For example, for a symmetric wing, if the side edges ED and E'D' are parallel to the stream, the zero-pressure curve passes through G and G' and is the line equidistant from the leading edge (fig. 30). The points G and G' are shown on figures 29 to 32. If E and D, E' and D', correspondingly, coincide and the trailing edges are straight lines then $F^* = 0$ passes through G and G' and is the curve obtained by inverting the leading edge E'E relative to the center of inversion O^*. The center O^* is the point of intersection of the trailing edges (fig. 31).

If the wing is asymmmetric and if the side edges ED and E'D' are parallel to the free stream then the zero-pressure curve is the reflection of the curve equidistant to the leading edge and passing through G and G', relative to the line equidistant from the side edges (fig. 29). If the points E and D, and also E' and D', coincide and the trailing edges are straight lines making identical angles with the stream then the geometrical locus $F^* = 0$ is the reflection of the curve obtained by an inversion, with center O^*, of the leading edge and passing through the points G and G' relative to the line equidistant from the side edges (fig. 32).

3. All the obtained results are generalized to the case when the leading edge E'E is given not by one equation $y = \psi_1(x)$ but consists of segments of smooth curves given by $y = \psi_{1k}(x)$, where $k = 1, 2, \ldots, n$ with n any integer. In such cases the surface and contour integrals in the formulas for the pressure should be divided into component parts for the actual evaluations.

The side, ED and E'D', and trailing, DT' and D'T, edges may also be piecewise smooth.

The same generalization holds for the previous three sections.

4. All the results are generalized in the case of the asymmetric flow over a wing which occurs, for example, in the motion of a yawed wing.

Let us consider a wing of arbitrary plan form with an angle of yaw γ as shown in figure 33.

The pressure on the wing can be computed by the same formulas if the equation of the arc $E_0'E_0$, in the coordinates transformed to the origin 0, is taken as the function $y = \psi_1(x)$.

The equation of E_0D_0 (correspondingly $E_0'D_0'$) is $y = \psi(x)$. In this case E_0D_0 acts as the wing tip.

Finally, for the trailing edge, D_0T_0, we have the equation $y = \chi(x)$ (correspondingly for $D_0'T_0'$).

5. As is known, knowing the acceleration potential or the velocity potential on the wing surface, we can easily compute the aerodynamic forces on the wing.

In order, we represent the aerodynamic-force formulas using the original coordinate system shown in figures 1 and 2.

The lift P on the wing is

$$P = 2\rho \iint_{\Sigma} \Phi_0(x,y)\, dx\, dy \tag{24.16}$$

where the region of integration in Σ is defined by $\psi_0(y) \leqq x \leqq \chi_1(y)$ and $y_D' \leqq y \leqq y_D$ where $x = \psi_0(y)$ is the equation of D'E'ED and $x = \chi_1(y)$ is the equation of the trailing edge D'TT'D (figs. 27 and 28). The limits y_{D_1} and y_D are respectively the coordinates of D' and D of the wing.

Since according to linearized theory $\Phi_0(x,y) = u\, \partial\varphi_0/\partial x$ then integrating (24.16) over x and keeping in mind that the velocity potential is zero on D'E'ED from conditions (1.11) and (1.12) of part I, the lift is

$$P = 2\rho u \int_{y_{D_1}}^{y_D} \varphi_0\left[\chi_1(y),y\right] dy$$

If the trailing edge is piecewise smooth, then in actual computations the contour integral must be divided into its component parts.

The expression for the moment M_{Oy} due to lift relative to the Oy-axis is

$$M_{Oy} = 2\rho \iint_{\Sigma} \varphi_0(x,y)x \quad dx\, dy \tag{24.17}$$

The moments relative to the other axes have the same form.

6. The explained theory can be generalized to the case of the flow over a tail or over a biplane in tandem.

We proceed as follows to obtain formulas to compute the pressure on the tail taking into account the influence of the wing.

Express $\varphi_{Ox} + \varphi_{Oy}$ at $M(x,y)$ on the tail using the basic formula (21.1). In the expression for $\varphi_{Ox} + \varphi_{Oy}$ under the integral sign insert $\vartheta_x + \vartheta_y$ on the vortex sheet. The function $\vartheta_x + \vartheta_y$ is found from the Abel integral equation which is constructed by the method of section 3.

In the case of flow over the tail the different characteristic regions on the tail must be separated just as was done in figures 27 and 28 for the uniform motion over a wing.

Only in this case, to divide the tail surface into regions, there must be taken into account, on the one hand, the wing effect and on the other hand, the tip effect and also the effect of the vortex sheet of the tail itself.

APPENDIX

EXAMPLES

The following examples, solved by N. S. Burrow and M. M. Priluk, will serve to illustrate the methods explained before.

A. Arrow-Shaped (or Swallowtail) Wing

Let us consider the arrow-shaped (or swallowtail) wing plan form where the leading edges are formed by the segments AD and AD' and the trailing edges by the segments DB and D'B as shown in figure 34. Let the following geometric parameters be given: δ_1 the angle between the leading edge and the free-stream direction; δ_2 the angle between the trailing edge and the free-stream direction and l the wing semispan.

The equations of the wing leading edges in the x,y characteristic coordinates with origin at O are

line AD

$$y_1 = \frac{1}{1 + \cot \alpha^* \tan \delta_1}\left\{(1 - \cot \alpha^* \tan \delta_1)x_1 + 2l \cot \alpha^*\right\}$$

line AD'

$$y_1 = \frac{1}{1 - \cot \alpha^* \tan \delta_1}\left\{(1 + \cot \alpha^* \tan \delta_1)x_1 - 2l \cot \alpha^*\right\}$$

and the trailing edge equations are

line DB

$$y_1 = \frac{1}{1 + \cot \alpha^* \tan \delta_2}\left\{(1 - \cot \alpha^* \tan \delta_2)x_1 + 2l \cot \alpha^*\right\}$$

line D'B

$$y_1 = \frac{1}{1 - \cot \alpha^* \tan \delta_2}\left\{\left(1 + \cot \alpha^* \tan \delta_2\right)x_1 - 2l \cot \alpha^*\right\}$$

where the angle α^* is the semiapex angle of the characteristic cone.

Let us consider the wing for which $\delta_1 > \alpha^*$ and $\delta_2 > \alpha^*$; that is, a wing surface not affected by the trailing vortex sheet.

We will assume that the wing surface is a plane inclined by an angle β_0 to the free-stream direction. Therefore, the derivative $\frac{\partial\varphi_0}{\partial z}$ will be a constant everywhere on both sides of the wing surface and will be given in the form

$$\frac{\partial\varphi_0}{\partial z} = - u\beta_0 \tan \alpha^* \tag{A1}$$

In conformance with the method we divide the wing surface into the three characteristic regions Ia, Ib, and Ic, with each region having its own analytic characteristic solution and taking into account the angular point A of the leading edge (fig. 34). Let us compute the stream pressure on the wing surface in each region.

Using the formula (5.9), we find the pressure in the regions Ia and Ib, lying outside the characteristic cone from A, to be

$$p = \frac{2u^2\rho\beta_0}{\sqrt{\frac{u^2}{a^2} - 1}} = 2u^2\rho\beta_0 \tan \alpha^* \tag{A2}$$

This formula shows that the pressure in regions Ia and Ib is a constant.

In region Ic, lying inside the characteristic cone from A, we find, by using the same formula, the pressure to be

$$p(x,y) = \frac{2u^2\rho\beta_0 \tan \delta_1}{\sqrt{\cot^2 \alpha^* \tan^2 \delta_1 - 1}}\left\{1 - \frac{2}{\pi} \tan^{-1}\sqrt{\frac{1 - \cot \alpha^* \tan \delta_1}{1 + \cot \alpha^* \tan \delta_1}\,\frac{l \cot \delta_1 - x_1}{y_1 - l \cot \delta_1}} + \right.$$

$$\left. \frac{2}{\pi} \tan^{-1}\sqrt{\frac{1 + \cot \alpha^* \tan \delta_1}{1 - \cot \alpha^* \tan \delta_1}\,\frac{l \cot \delta_1 - x_1}{y_1 - l \cot \delta_1}}\right\} \tag{A3}$$

In the original coordinate system shown in figures 34 and 35, (A3) becomes

$$p(x,y) = \frac{2u^2\rho\beta_0 \tan \delta_1}{\sqrt{\cot^2 \alpha^* \tan^2 \delta_1 - 1}} \times$$

$$\left\{1 - \frac{2}{\pi} \tan^{-1}\sqrt{\frac{1 - \cot \alpha^* \tan \delta_1}{1 + \cot \alpha^* \tan \delta_1} \frac{l \cot \delta_1 - x + y \cot \alpha^*}{y \cot \alpha^* + x - l \cot \delta_1}} + \right.$$

$$\left. \frac{2}{\pi} \tan^{-1}\sqrt{\frac{1 + \cot \alpha^* \tan \delta_1}{1 - \cot \alpha^* \tan \delta_1} \frac{l \cot \delta_1 - x + y \cot \alpha^*}{y \cot \alpha^* + x - l \cot \delta_1}}\right\} \tag{A4}$$

These formulas show that the pressure is constant along each ray from A in region Ic.

Shown in figures 36 and 37, respectively, are the pressures along a section A_1B_1 parallel to the y-axis and along the section A_2B_2 parallel to the x-axis.

The lift P of the considered wing is

$$P = \frac{2u^2\rho\beta_0 l^2(\tan \delta_1 - \tan \delta_2)}{\tan \delta_2\sqrt{\cot^2 \alpha^* \tan^2 \delta_1 - 1}}\left\{1 + \frac{2}{\pi} \tan^{-1}\sqrt{\frac{\cot \alpha^* \tan \delta_1 - 1}{\cot \alpha^* \tan \delta_1 + 1}} + \right.$$

$$\frac{2}{\pi} \frac{\tan \delta_1 - \tan \delta_2}{\tan \delta_1 + \tan \delta_2} \tan^{-1}\sqrt{\frac{\cot \alpha^* \tan \delta_1 + 1}{\cot \alpha^* \tan \delta_1 - 1}} +$$

$$\left. \frac{4}{\pi} \frac{\tan^3 \delta_2}{\tan \delta_1(\tan^2 \delta_1 - \tan^2 \delta_2)} \tan^{-1}\sqrt{\frac{\cot \alpha^* \tan \delta_2 - 1}{\cot \alpha^* \tan \delta_2 + 1}}\right\} \tag{A5}$$

The lift coefficient C_z is

$$C_z = \frac{4\beta_0 \tan \delta_1}{\sqrt{\cot^2 \alpha^* \tan^2 \delta_1 - 1}}\left\{1 - \frac{2}{\pi} \tan^{-1}\sqrt{\frac{\cot \alpha^* \tan \delta_1 - 1}{\cot \alpha^* \tan \delta_1 + 1}} + \right.$$

$$\left. \frac{2}{\pi} \frac{\tan \delta_1 - \tan \delta_2}{\tan \delta_1 + \tan \delta_2} \tan^{-1}\sqrt{\frac{\cot \alpha^* \tan \delta_1 + 1}{\cot \alpha^* \tan \delta_1 - 1}}\right\} +$$

$$\frac{16\beta_0 \tan^2 \delta_2}{\pi(\tan \delta_1 + \tan \delta_2)\sqrt{\cot^2 \alpha^* \tan^2 \delta_2 - 1}} \tan^{-1}\sqrt{\frac{\cot \alpha^* \tan \delta_2 - 1}{\cot \alpha^* \tan \delta_2 + 1}} \tag{A6}$$

As is well known, the wave drag coefficient C_x is related to the lift coefficient through $C_x = \beta_0 C_z$.

Let us consider particular cases of (A6). In the limit as $\delta_1 \rightarrow \frac{\pi}{2}$, we obtain for the triangular wing

$$C_z = 4\beta_0 \tan \alpha^* \tag{A7}$$

the well known result[4] for the lift coefficient of a triangle.

Comparing (A6) and (A7) we conclude that for identical wing speeds and identical angles of attack the lift coefficient of the arrow-shaped wing exceeds the lift coefficient of the triangular wing.

In the particular case when $\delta_2 = \delta_1$, we obtain the infinite span arrow-shaped wing. In the limit as $\delta_2 \rightarrow \delta_1$ (A6) yields

$$C_z = \frac{4\beta_0 \tan \delta_1}{\sqrt{\cot^2 \alpha^* \tan^2 \delta_1 - 1}}$$

This result shows that the lift coefficient of an infinite span arrow-shaped wing equals the lift coefficient of an infinite span slipping wing with slip angle δ_1.

Formula (A6) shows that with increasing δ_1 and δ_2, the angles between the leading and trailing edges and the free stream, respectively, the wing lift coefficient decreases. The dependence of C_z for an arrow-shaped wing on δ_1 and δ_2 is shown in figures 38 and 39.

B. Semielliptic Wing

Let us consider the wing plan form which is half an ellipse as shown in figure 40. Let the semiaxis a_1 and b_1 of the ellipse be given. Let us assume that the wing moves, as shown in the figure, in the direction of the axis of symmetry.

---

[4]See the work of M. I. Gurevich: On the Lift of an Arrow-Shaped Wing in Supersonic Flow. Prik. Mate. Nekh., Vol. X, No. 4, 1946.

The equation of the leading edge, the line D'D, in characteristic coordinates with origin at O is

$$y_1 = - x_1$$

and the trailing edge equation in these same coordinates is

$$y_1 = \frac{\left(a_1^2 - b_1^2 \cot^2 \alpha^*\right)x_1 \pm 2a_1b_1 \cot \alpha^*\sqrt{a_1^2 + b_1^2 \cot^2 \alpha^* - x_1^2}}{a_1^2 + b_1^2 \cot^2 \alpha^*}$$

In the original x,y coordinates the trailing edge equation is

$$y = \pm \frac{b_1\sqrt{a_1^2 - x^2}}{a_1} \tag{B1}$$

The plus sign relates to the arc CD of the ellipse and the minus sign to the arc CD'.

Let us assume that the wing surface is a plane inclined at an angle β_0 to the free-stream direction, therefore the normal derivative $\frac{\partial\varphi_0}{\partial z_1}$ as given by (A1).

Let us consider the flow around the semiellipse when the characteristic cones from D and D' intersect on the wing surface. In conformance with the method we divide the wing surface into the four regions I, VI, VI', and V. Region I is outside the characteristic cones from D and D', hence the vortex sheet trailing from the wing exerts no effect here. Region VI is within the characteristic cone from D but outside the cone from D'. Conversely, VI' is within the cone from D' and outside the cone from D. Region V, however, falls within both the characteristic cones from D and D'.

Using the formulas, we compute the pressure in each region on the wing surface. The pressure in I is constant everywhere and expressed by (A2). In VI the pressure distribution in the x,y coordinates is given by

$$p = u^2\rho\beta_0 \tan \alpha^* \times$$

$$\left\{1 - \frac{2}{\pi} \sin^{-1} \frac{\cot \alpha^* B_1y + B_2f_1 + 2a_1b_1 \cot \alpha^*\sqrt{B_1 - f_1^2}}{xB_1}\right\} \tag{B2}$$

where

$$B_1 = a_1^2 + b_1^2 \cot^2 \alpha^*, \qquad f_1 = x + y \cot \alpha^*$$

$$B_2 = a_1^2 - b_1^2 \cot^2 \alpha^*$$

Similarly for region VI'. The pressure distribution in V is

$$p(x,y) = \frac{2u^2\rho\beta_0 \tan \alpha^*}{\pi} \times$$

$$\left\{ - \sin^{-1} \frac{\cot \alpha^* B_1 y' + B_2 f_1 + 2a_1 b_1 \cot \alpha^* \sqrt{B_1 - f_1^2}}{xB_1} + \right.$$

$$\sin^{-1} \frac{\cot \alpha^* B_1 y + B_2 f_2 - 2a_1 b_1 \cot \alpha^* \sqrt{B_1 - f_2^2}}{xB_1} \qquad \text{(B3)}$$

where $f_2 = x - y \cot \alpha^*$ and B_1, B_2, and f_1 are as defined in (B2). Graphs of the pressure distributions along the respective sections A_1B_1 and A_2B_2 parallel to the y-axis are given in figures 41 and 42 and along the corresponding segments A_3B_3 and A_4B_4 parallel to the x-axis are shown in figures 43 and 44. Spanwise section lines A_1B_1 and A_2B_2 are shown in figure 45; whereas chordwise section lines A_3B_3 and A_4B_4 are shown in figure 40.

If the semiaxis of the ellipse are given in a special way; namely, if there exists between the semiaxes the relation $a_1 = b_1 \cot \alpha^*$, then formula (B2) for the pressure distribution in region VI simplifies, becoming

$$p(x,y) = u^2\rho\beta_0 \tan \alpha^* \left\{ 1 - \frac{2}{\pi} \sin^{-1} \frac{\cot \alpha^* y + \sqrt{2a_1^2 - (x + \cot \alpha^* y)^2}}{x} \right\} \qquad \text{(B4)}$$

This corresponds to the case where the characteristic cones with apexes at D and D' intersect the wing trailing edge on the axis of symmetry of the wing at the point C; consequently the region V on the wing now vanishes.

In the general case for the flow around a semielliptical wing, it may be shown that on the surface of the wing in region V, there exists a certain curve along which the pressure difference between the upper and lower surfaces of the wing reduces to zero. Downstream from this curve on the surface of the wing the pressure difference becomes negative. We find the equation for this line of zero pressure by equating the right side of (B3) to zero.

$$\left(a_1^2 + b_1^2 \cot^2 \alpha^*\right)^4 + \left(a_1^2 - b_1^2 \cot^2 \alpha^*\right)^2 4a_1^2 b_1^2 \cot^2 \alpha^*\Big] x^2 +$$

$$\left[\left(a_1^2 - b_1^2 \cot^2 \alpha^*\right)^2 4a_1^2 b_1^2 \cot^4 \alpha^* + 16a_1^4 b_1^2 \cot^6 \alpha^*\right] y^2$$

$$= 4a_1^2 b_1^2 \cot^2 \alpha^* \left(a_1^2 - b_1^2 \cot^2 \alpha^*\right)^2 \left(a_1^2 + b_1^2 \cot^2 \alpha^*\right)$$

After obvious transformations, we represent the desired geometric locus in the following final form

$$\frac{x^2}{a_2^2} + \frac{y^2}{b_2^2} = 1 \tag{B5}$$

where

$$a_2 = \frac{2a_1 b_1 \cot \alpha^*}{\sqrt{a_1^2 + b_1^2 \cot^2 \alpha^*}} \qquad b_2 = \frac{a_1^2 - b_1^2 \cot^2 \alpha^*}{\cot \alpha^* \sqrt{a_1^2 + b_1^2 \cot^2 \alpha^*}} \tag{B6}$$

These results show that the zero-pressure line is the arc of an ellipse with semiaxes a_2 and b_2 related through (B6) to the semiaxes a_1 and b_1 of the arc of the ellipse which is the wing trailing edge. The directions of the semiaxes a_2 and b_2 coincide with those of the semiaxes a_1 and b_1. In order that the zero-pressure line should not pass through the wing surface, the elliptical arc forming the trailing edge of the wing should not have a real point of intersection with (B5), which determines the zero-pressure line. Comparing (B1) and (B5) we obtain the following result. In order that the zero-pressure line, of a plane wing of semielliptic plan form moving at the supersonic speed u, should not pass through the wing surface, it is necessary and sufficient that the geometric parameters of the wing satisfy the condition

$$a_1 \leq \sqrt{3}\, b_1 \cot \alpha^* \tag{B7}$$

Constructed in figure 46 is an isometric view of the pressure on a semielliptic wing in the general case when (B7) is not fulfilled and there exist the regions I, VI, VI', V on the wing.

C. Hexagonal Wing

Let us consider the wing of hexagonal plan form shown in figure 47. Let the leading edges be the lines OE_1, and OE_1', the side edges E_1D and $E_1'D'$ parallel to the free stream, and the trailing edges DB and D'B. In characteristic-coordinate space, the wing has plan form as shown in figure 48.

Let us assign the following geometric parameters: σ – the angle the leading edge makes with the free stream; γ – the angle the trailing edge makes with the free stream; l – semispan and h chord.

Let us consider that wing for which $\sigma > \alpha^*$, $\gamma > \alpha^*$. The first inequality means that the wing surface extends outside of the characteristic cone from O. The second inequality means that the wing surface is outside the sphere of influence of the trailing vortex sheet.

The equations of the lines forming the wing contours are: the line OE_1

$$y = x \tan \sigma$$

or in characteristic coordinates

$$y_1 = \frac{1}{m} x_1$$

where

$$m = \frac{1 - \cot \alpha^* \tan \sigma}{1 + \operatorname{ctg} \alpha^* \operatorname{tg} \sigma}$$

here $m < 0$, since $\delta > \alpha^*$; the line OE_1'

$$y = - x \tan \sigma \quad \text{and} \quad y_1 = mx_1$$

the line E_1D

$$y = l \quad \text{and} \quad y_1 = x_1 + 2 \cot a^* l$$

the line $E_1'D'$

$$y = - l \quad \text{and} \quad y_1 = x_1 - 2 \cot a^* l$$

the line DB

$$y = - x \tan \gamma + h \tan \gamma \quad \text{and} \quad y_1 = \frac{1}{m_1} x_1 + n_1$$

and finally D'B

$$y = x \tan \gamma - h \tan \gamma \quad \text{and} \quad y_1 = m_1 x_1 \mp n_2$$

where

$$m_1 = \frac{1 + \cot \alpha^* \tan \gamma}{1 - \cot \alpha^* \tan \gamma} \qquad n_1 = \frac{2h \cot \alpha^* \tan \gamma}{1 + \cot \alpha^* \tan \gamma}$$

$$n_2 = \frac{2h \cot \alpha^* \tan \gamma}{1 - \cot \alpha^* \tan \gamma}$$

In conformance with the method we divide the wing surface into the 13 characteristic regions shown in figure 48.

Assuming that the surface of the wing is a plane, we give the streamline condition in the form (A1) and we compute the pressure in each characteristic region. We produce below the results of computing the pressure on the wing surface as formulas already transformed back to the original coordinate system.

The pressure in Ia and Ib is constant and expressed by (A2). In Ic the pressure is

$$p(x,y) = \frac{2u^2 \rho \beta_0}{\pi \sqrt{-m} \cot \alpha^*} \left\{ -\frac{\pi}{2} + \tan^{-1} \frac{1}{\sqrt{-m}} \sqrt{\frac{x - \cot \alpha^* y}{x + \cot \alpha^* y}} - \tan^{-1} \sqrt{-m} \sqrt{\frac{x - \cot \alpha^* y}{x + \cot \alpha^* y}} \right\} \tag{C1}$$

Hence it follows that the pressure is constant along each ray starting from O in Ic. In IIIa

$$p(x,y) = \frac{2u^2 \rho \beta_0 (1 - m)}{\pi \sqrt{-m} \cot \alpha^*} \tan^{-1} \sqrt{\frac{2 \cot \alpha^* (l - y)}{(m - 1)(x + \cot \alpha^* y) + 2l \cot \alpha^*}} \tag{C2}$$

In IIIb

$$p(x,y) = \frac{2u^2\rho\beta_0(m - 1)}{\pi\sqrt{-m}\cot\alpha^*}\left\{\tan^{-1}\frac{1}{\sqrt{-m}}\sqrt{\frac{x - \cot\alpha^* y}{x + \cot\alpha^* y}} - \right.$$

$$\tan^{-1}\sqrt{\frac{2\cot\alpha^*(l - y)}{(1 - m)(x + \cot\alpha^* y) + 2l\cot\alpha^*}} -$$

$$\left.\tan^{-1}\sqrt{-m}\sqrt{\frac{x - \cot\alpha^* y}{x + \cot\alpha^* y}}\right\} \tag{C3}$$

In IIIc

$$p(x,y) = \frac{2u^2\rho\beta_0(1 - m)}{\pi\sqrt{-m}\cot\alpha^*}\tan^{-1}\sqrt{\frac{2m\cot\alpha^*(y - l)}{(1 - m)(x + \cot\alpha^* y) + 2ml\cot\alpha^*}} \tag{C4}$$

In IIa

$$p(x,y) = \frac{2u^2\rho\beta_0(1 - m)}{\pi\sqrt{-m}\cot\alpha^*}\left\{\tan^{-1}\sqrt{\frac{2m\cot\alpha^*(y - l)}{(1 - m)(x + \cot\alpha^* y) + 2ml\cot\alpha^*}} - \right.$$

$$\left.\tan^{-1}\sqrt{\frac{(1 - m)(x - \cot\alpha^* y) - 2l\cot\alpha^*}{2\cot\alpha^*(l + y)}}\right\} \tag{C5}$$

In IIb

$$p(x,y) = \frac{2u^2\rho\beta_0(1 - m)}{\pi\sqrt{-m}\cot\alpha^*}\left\{\tan^{-1}\frac{1}{\sqrt{-m}}\sqrt{\frac{x - \cot\alpha^* y}{x + \cot\alpha^* y}} - \right.$$

$$\tan^{-1}\sqrt{\frac{2\cot\alpha^*(l - y)}{(1 - m)(x + \cot\alpha^* y) - 2l\cot\alpha^*}} +$$

$$\tan^{-1}\sqrt{\frac{(1 - m)(x + \cot\alpha^* y) - 2l\cot\alpha^*}{2\cot\alpha^*(l + y)}} -$$

$$\left.\tan^{-1}\sqrt{-m}\sqrt{\frac{x - \cot\alpha^* y}{x + \cot\alpha^* y}}\right\} \tag{C6}$$

In IIc

$$p(x,y) = \frac{2u^2\rho\beta_0(m - 1)}{\pi\sqrt{-m}\cot\alpha^*}\left\{\tan^{-1}\frac{1}{\sqrt{-m}}\sqrt{\frac{(1 - m)(x - \cot\alpha^* y) + 2ml\cot\alpha^*}{2\cot\alpha^*(l + y)}} - \right.$$

$$\tan^{-1}\frac{1}{\sqrt{-m}}\sqrt{\frac{x - \cot\alpha^* y}{x + \cot\alpha^* y}} + \tan^{-1}\sqrt{-m}\sqrt{\frac{x - \cot\alpha^* y}{x + \cot\alpha^* y}} -$$

$$\left.\tan^{-1}\sqrt{-m}\sqrt{\frac{2\cot\alpha^*(l - y)}{(1 - m)(x + \cot\alpha^* y) + 2ml\cot\alpha^*}}\right\} \tag{C7}$$

Formulas for the pressure distribution on the wing surface in regions IIIa', IIIb', IIIc', and IIa' may be obtained from (C2), (C3), (C4), and (C5), respectively, if coordinates appropriate to the specific regions are chosen.

The formulas for the pressure show that there is a zero-pressure line on the wing surface, downstream of which the pressure difference below and above the wing becomes negative. This line is formed of the two segments KN and KN' the equations of which are

$$y = x \tan \delta - 2l \tan \alpha^* \tan \sigma \qquad y = - x \tan \delta + 2l \tan \alpha^* \tan \sigma \quad (C8)$$

and which are parallel to the leading edges E_1O and $E_1'O$.

The zero-pressure line may easily be constructed graphically.

Graphical representations of the respective pressure distributions in the sections A_1B_1, A_2B_2, A_3B_3, A_4B_4, and A_5B_5 parallel to the y-axis are given in figures 49, 50, 51, 52, and 53.

An isometric pressure surface is shown in figure 54 for the hexagonal plane wing.

Translated by Morris D. Friedman

REFERENCES

1. Sedov, L. I.: Theory of Plane Motion of an Ideal Fluid, 1939. (Russian)

2. Kochin, N. E.: On the Steady Oscillations of a Wing of Circular Plan Form. P.M.M., vol. VI, no. 4, 1942. NACA translation.

3. Prandtl, L.: Theorie des Flügzeugtragflügels im Zusammendrückbaren Medium. Luftfahrtforschung, no. 10, vol. 13, 1936.

4. Ackeret, J.: Gasdynamik. Handbuch der Physik, vol. VII.

5. Krasilshchikova, E. A.: Disturbed Motion of Air for a Vibrating Wing Moving at Supersonic Speeds. P.M.M., vol. XI, 1947. Also D.A.N., vol. LVI, no. 6, 1947. Brown translation.

6. Krasilshchikova, E. A.: Tip Effect on a Vibrating Wing at Supersonic Speeds. D.A.N., vol. LVIII, no. 5, 1947.

7. Krasilshchikova, E. A.: Effect of the Vortex Sheet on the Steady Motion of a Wing at Supersonic Speeds. D.A.N., vol. LVIII, no. 6, 1947.

8. Krasilshchikova, E. A.: Tip Effect on a Wing Moving at Supersonic Speed. D.A.N., vol. LVIII, no. 4, 1947.

9. Krasilshchikova, E. A.: On the Theory of the Unsteady Motion of a Compressible Fluid. D.A.N., vol. LXXII, no. 1, 1950.

10. Falkovich, S. V.: On the Lift of a Finite Span Wing in a Supersonic Flow. P.M.M., vol. XI, no. 1, 1947.

11. Gurevich, M. I.: On the Lift on an Arrow-Shaped Wing in a Supersonic Flow. P.M.M., vol. X, no. 2, 1947.

12. Gurevich, M. I.: Remarks on the Flow Over Triangular Wings in Supersonic Flow. P.M.M., vol. XI, no. 2, 1947.

13. Karpovich, E. A., and Frankl, F. I.: Drag of an Arrow-Shaped Wing at Supersonic Speeds. P.M.M., vol. XI, no. 4, 1947. Brown translation.

14. Frankl, F. I., and Karpovich, E. A.: Gas Dynamics of Thin Bodies. 1948. Translation published by Interscience Publ., N. Y. 1954.

15. Panichkin, I. A.: On the Forces Acting on an Oscillating Wing Profile in a Supersonic Gas Flow. P.M.M., vol. XI, no. 1, 1947.

16. Galin, L. A.: On a Finite-Span Wing in Supersonic Flow. P.M.M., vol. XI, no. 3, 1947.

17. Falkovich, S. V.: On the Theory of Finite-Span Wings in Supersonic Flow. P.M.M., vol. XI, no. 3, 1947.

18. Khaskind, M. D., and Falkovich, S. V.: Finite-Span Oscillating Wing in Supersonic Flow. P.M.M., vol. XI, no. 3, 1947.

19. Gurevich, M. I.: On the Question of the Thin Triangular Wing Moving at Supersonic Speeds. P.M.M., vol. XI, no. 3, 1947.

20. Galin, L. A.: Wing of Triangular Plan Form in Supersonic Flow. P.M.M., vol. XI, no. 4, 1947.

21. Puckett, A.: Supersonic Wave Drag of Thin Aerofoils. Jnl. Aero. Sci., vol. 13, no. 9, 1946.

22. Von Kármán, T.: Supersonic Aerodynamics. Jnl. Aero. Sci., vol. 14, no. 7, 1947.

23. Ackeret, J.: Luftkräfte auf Flügel, die mit grösserer, als schallgeschwindigkeit bewegt werden. Zeit. fur Flugt. u. Mot., vol. 16, 1928.

24. Schlichting, H.: Tragflugeltheorie bei Uberschallgeschwindigkeit. Luftfahrtforschung., vol. 13, No. 10, 1936.

25. Borbely, N.: Über die Luftkräfte, die auf einen harmonischschwingenden zweidimensionalen Flügel bei Überschallströmung wirken. ZAMM, vol. 22, no. 4, 1943.

26. Busemann, A.: Infinitesimale kegelige Überschallströmung. Luftfahrtforschung, no. 3, 1943.

27. Frenkel: Electrodynamics, vol. 1.

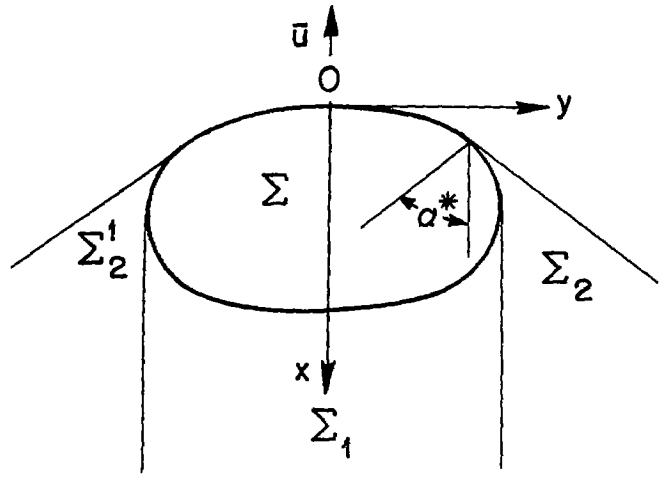

Figure 1.

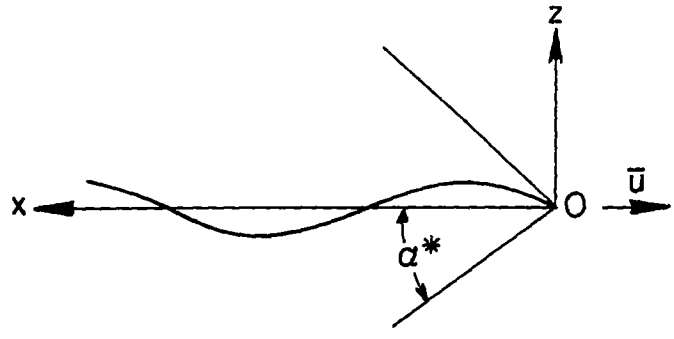

Figure 2.

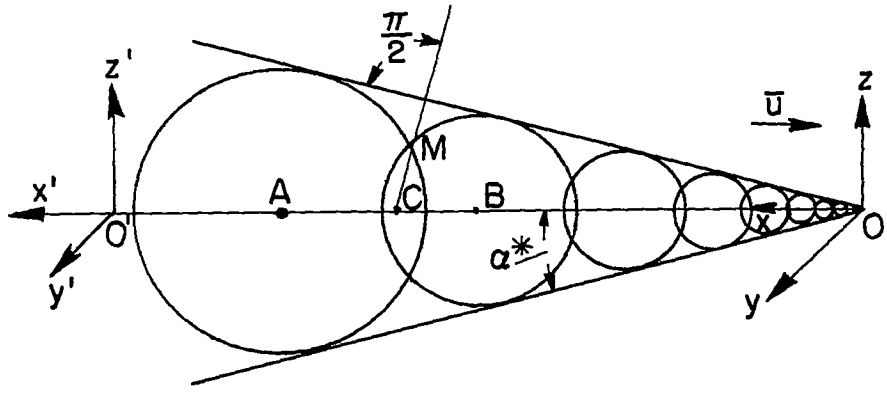

Figure 3.

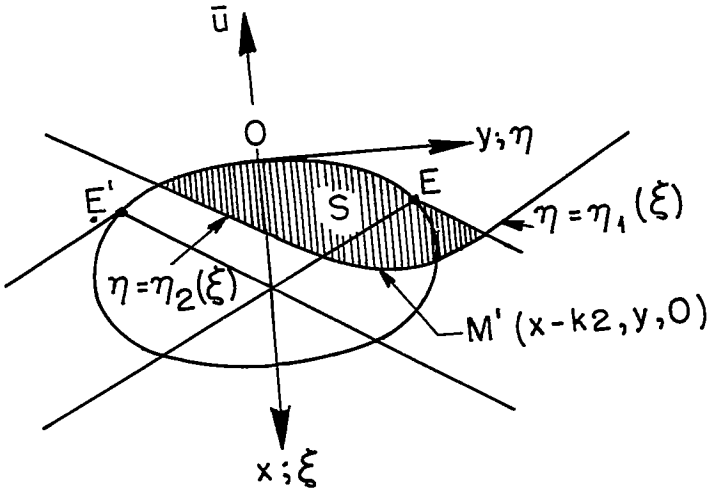

Figure 4.

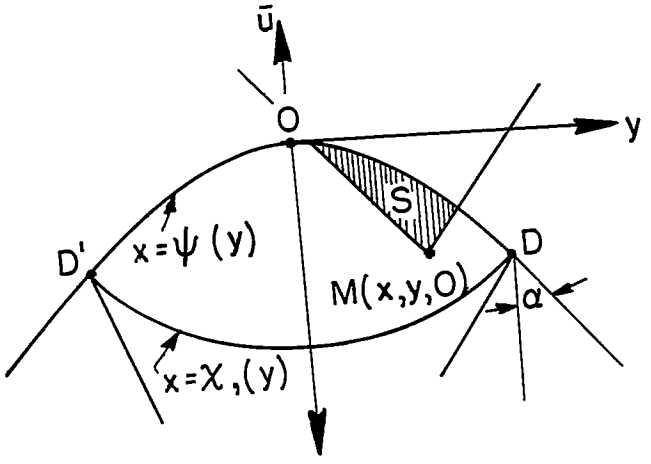

Figure 5.

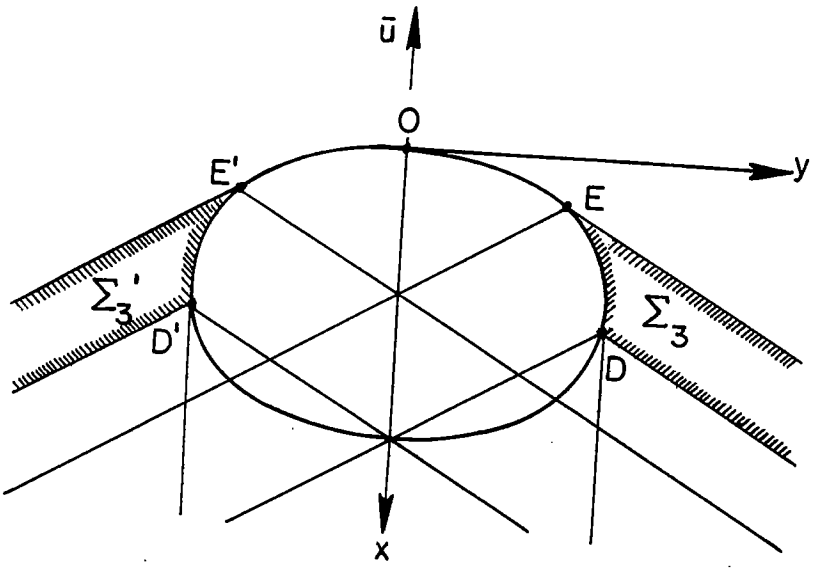

Figure 6.

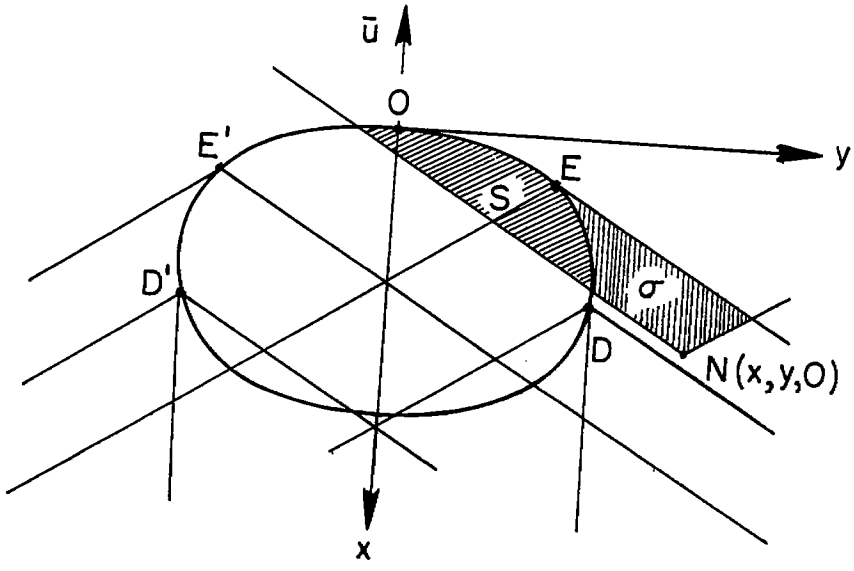

Figure 7.

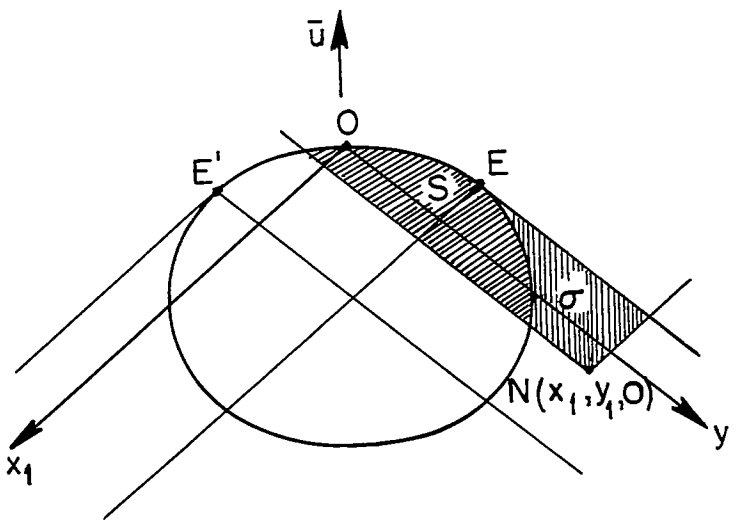

Figure 8.

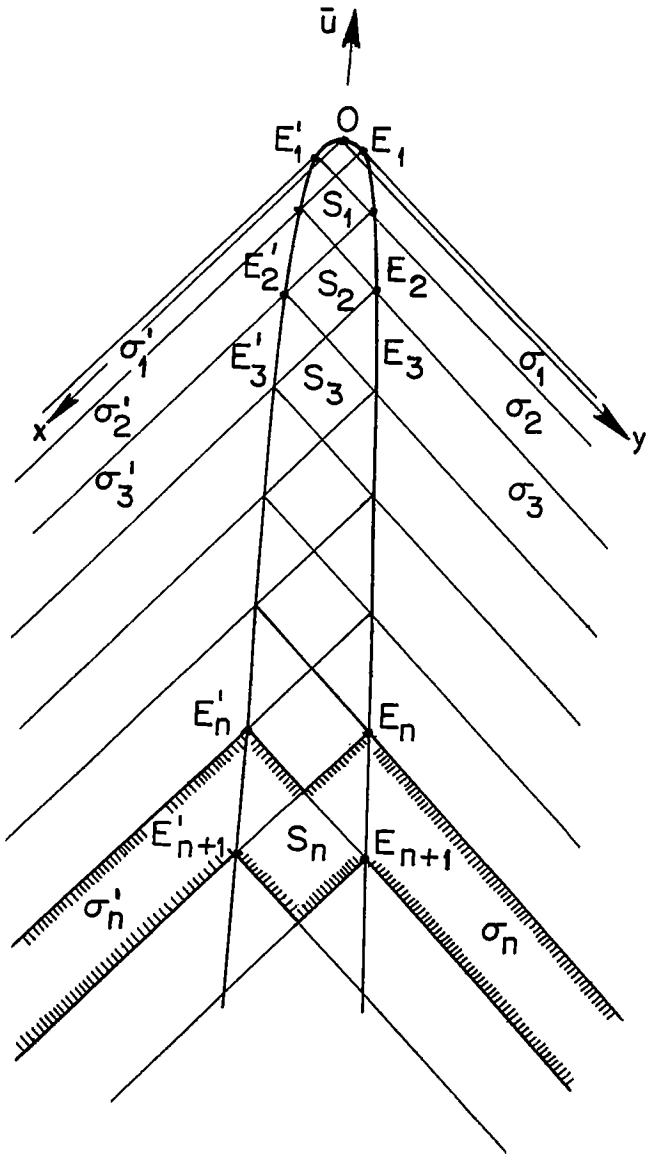
ū
O
E'1
E1
S1
E'2
S2
E2
E'3
S3
E3
σ'1
σ'2
σ'3
σ1
σ2
σ3
x
y
E'n
En
E'n+1
Sn
En+1
σ'n
σn

Figure 9.

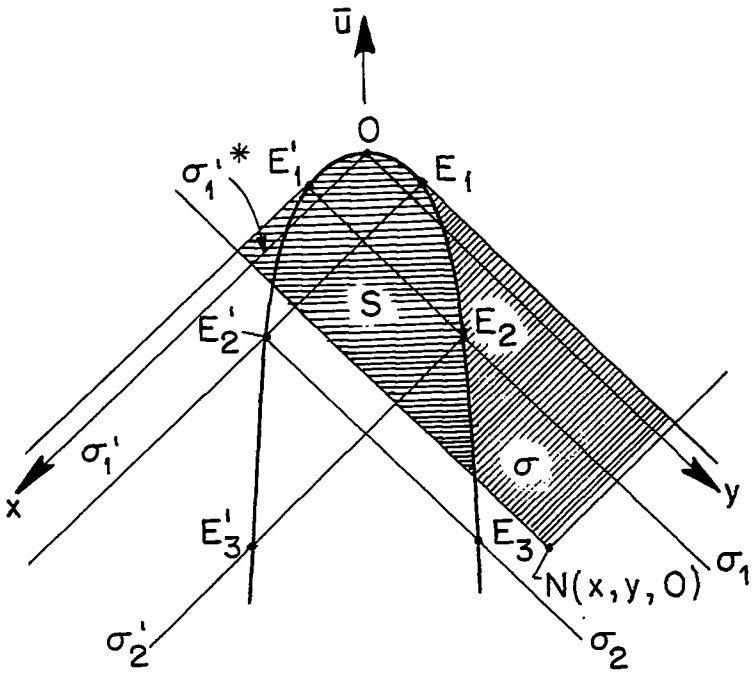

Figure 10.

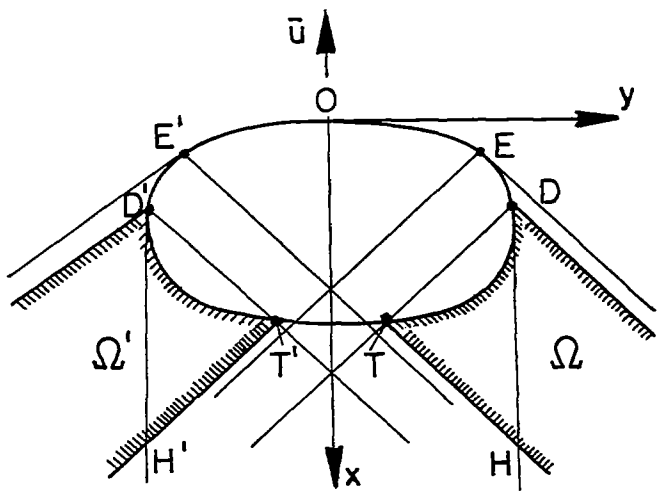

Figure 11.

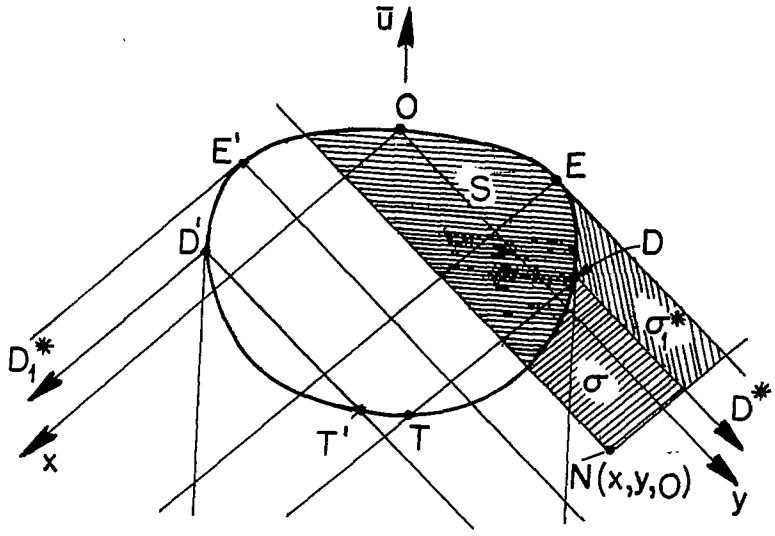

Figure 12.

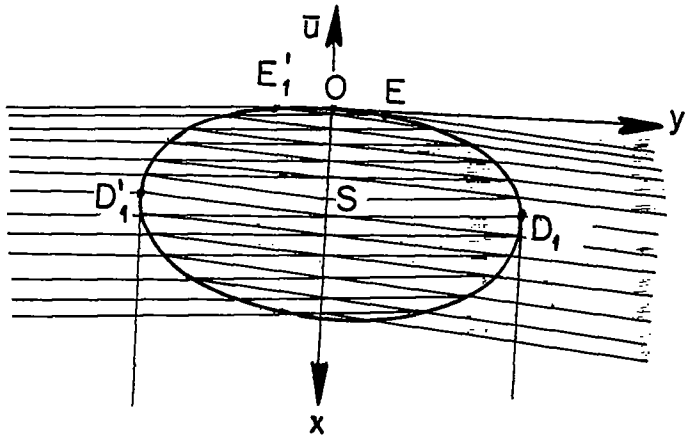

Figure 13.

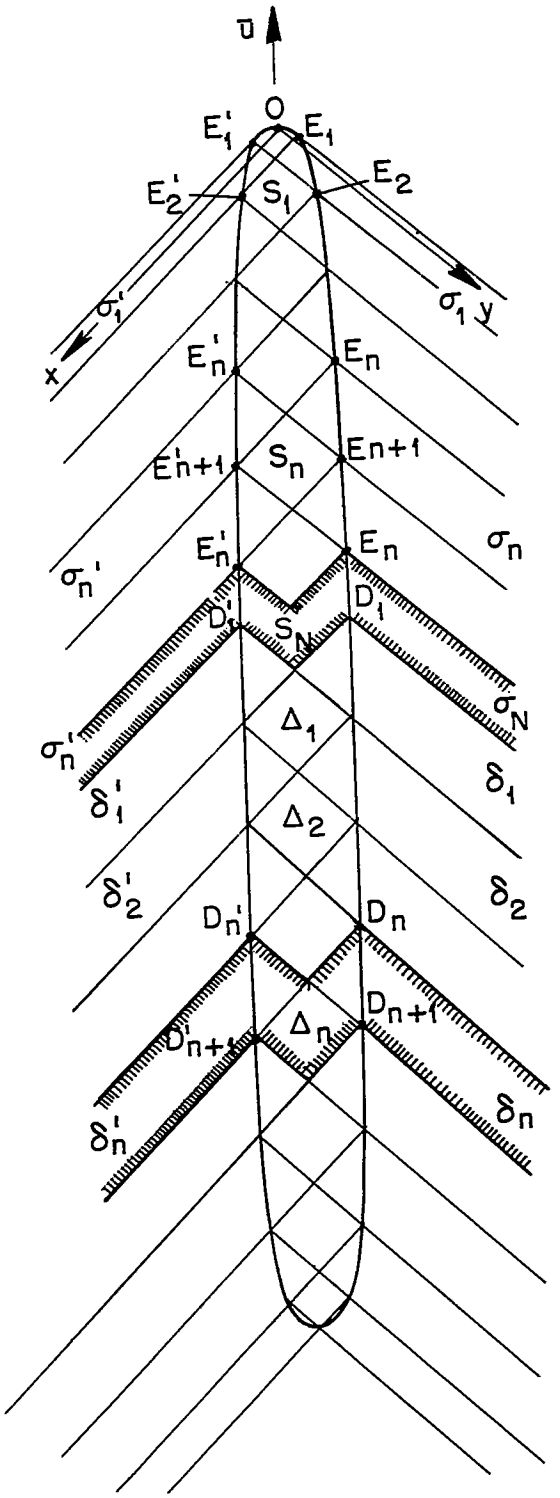
$\bar{u}$
O
E_1'
E_1
E_2'
S_1
E_2
σ_1'
σ_1
y
x
E_n'
E_n
E_{n+1}'
S_n
E_{n+1}
σ_n
E_n'
E_n
σ_n'
D_1'
S_N
D_1
σ_N
Δ_1
σ_n'
δ_1'
δ_1
Δ_2
δ_2'
δ_2
D_n'
D_n
D_{n+1}'
Δ_n
D_{n+1}
δ_n
δ_n'

Figure 14.

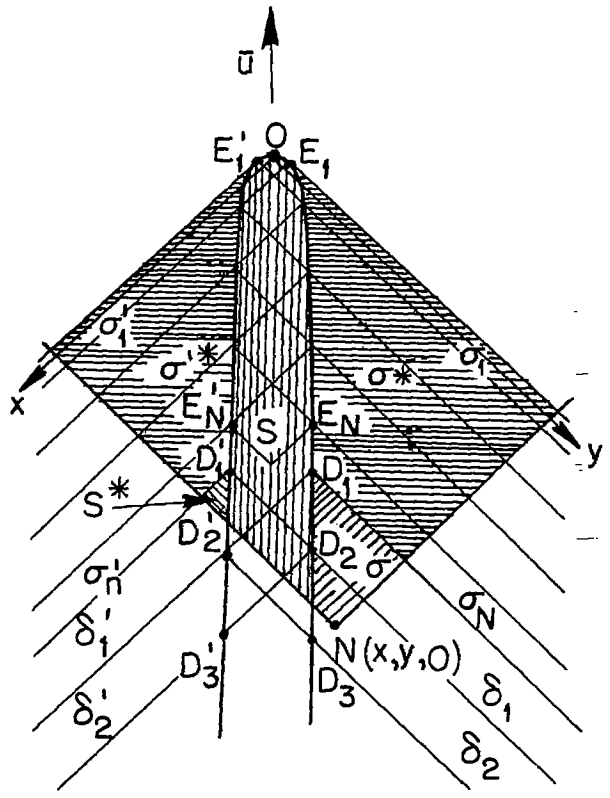

Figure 15.

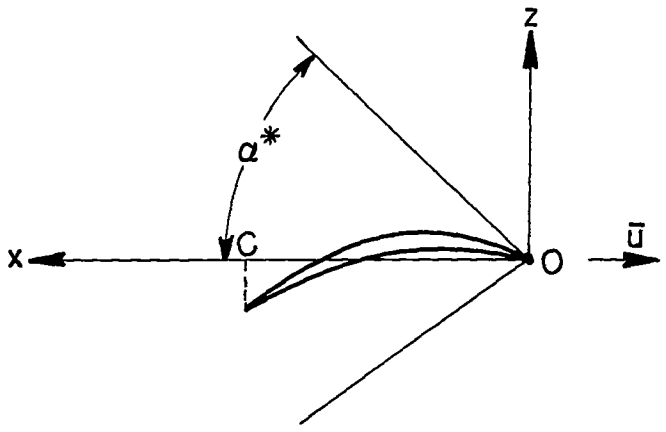

Figure 15(a).

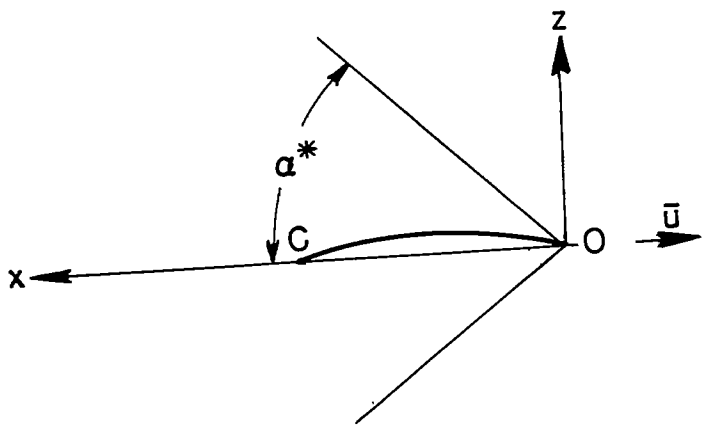

Figure 15(b).

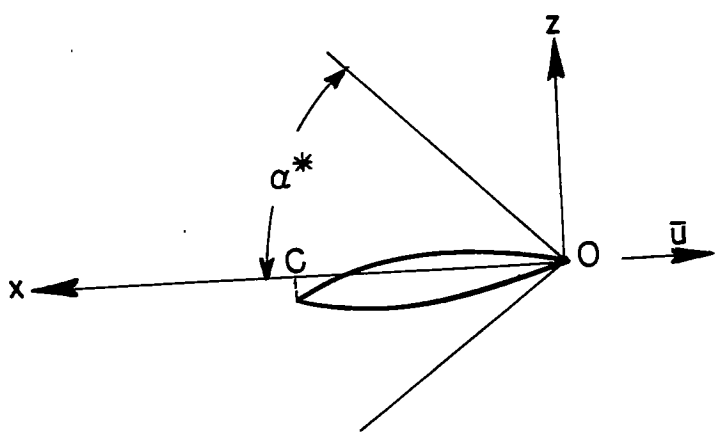

Figure 15(c).

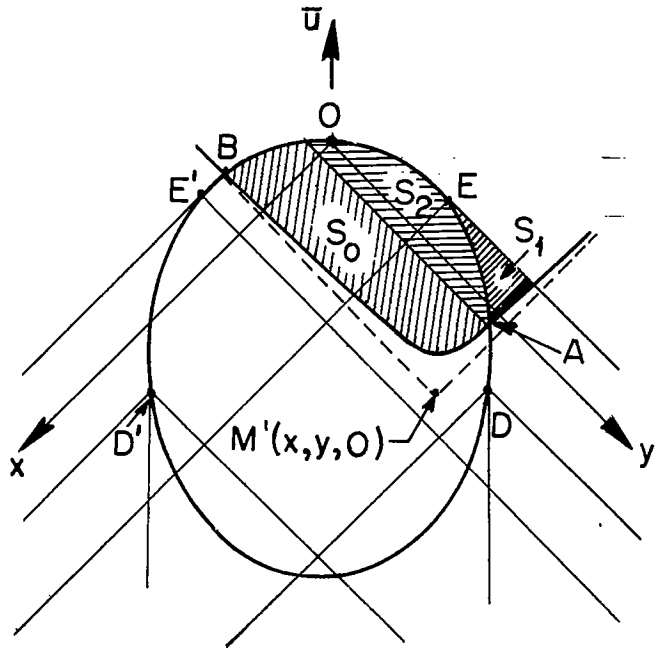

Figure 16.

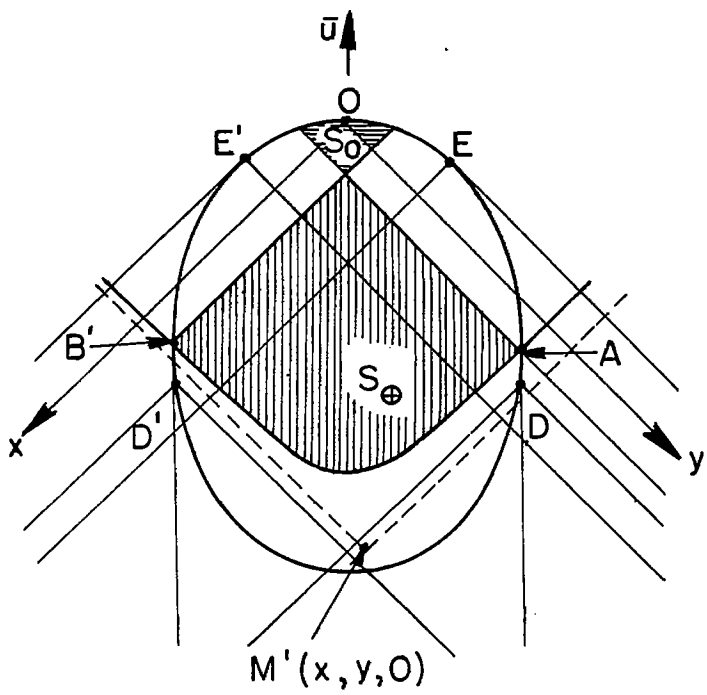

Figure 17.

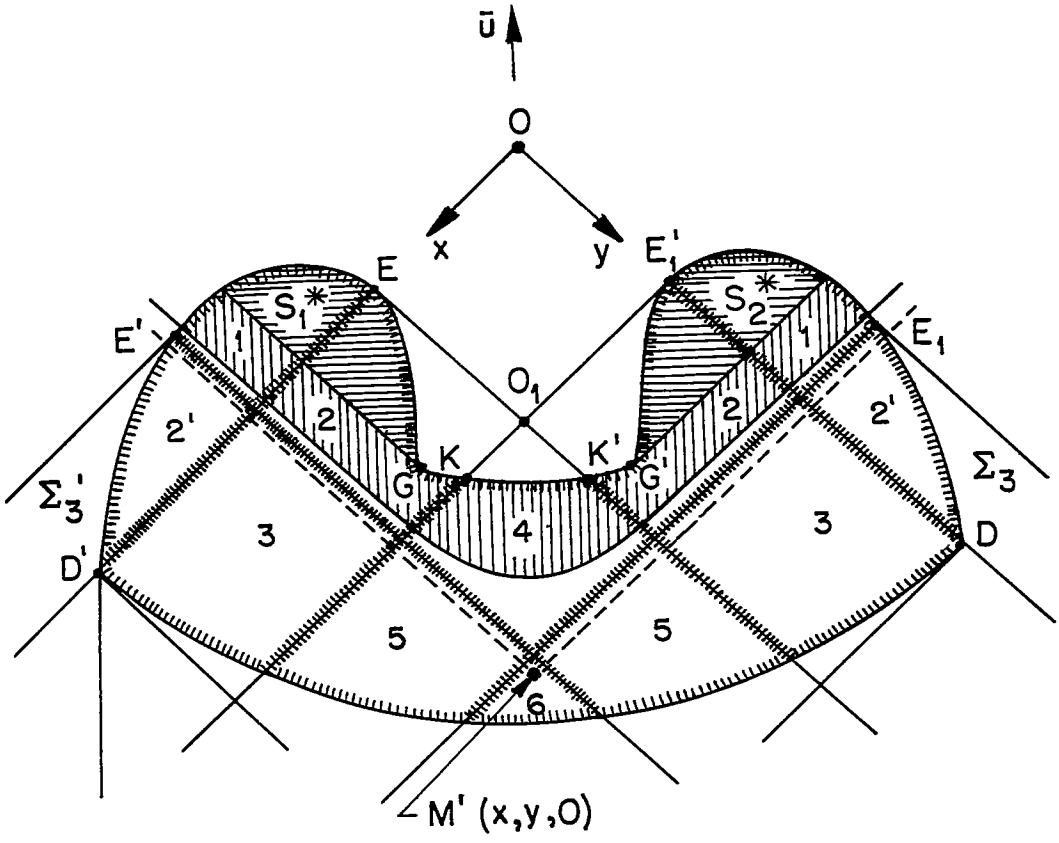

Figure 18.

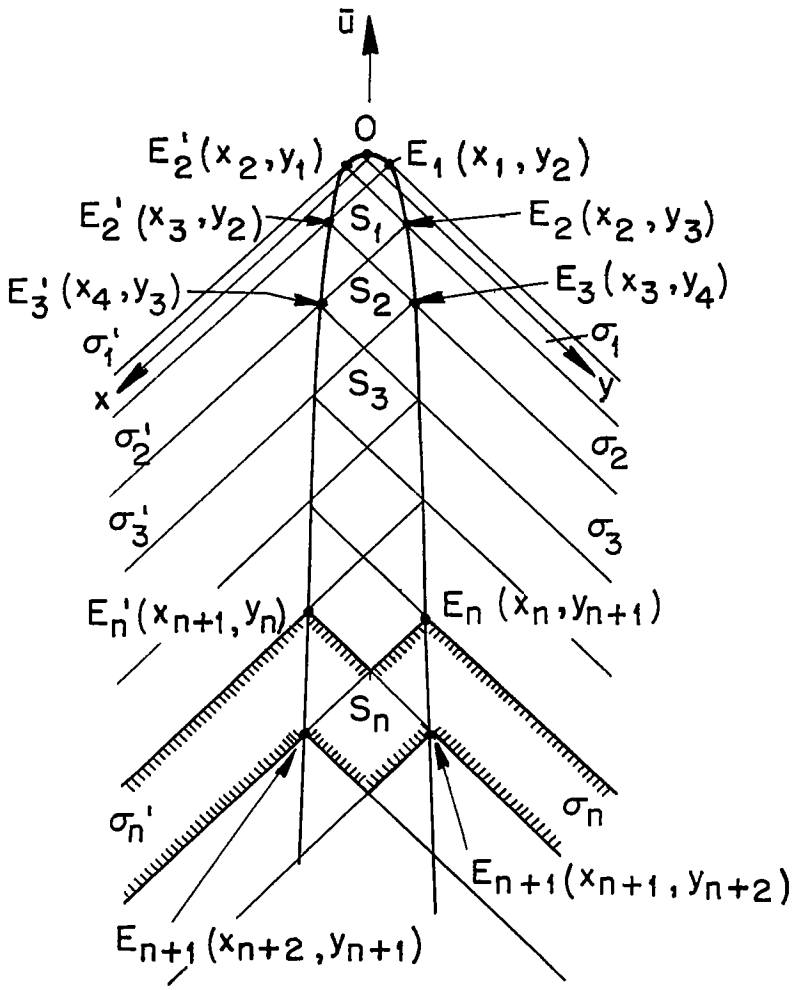
ū
O
E'2(x2,y1)
E1(x1,y2)
E'2(x3,y2)
S1
E2(x2,y3)
E'3(x4,y3)
S2
E3(x3,y4)
σ'1
σ1
x
y
S3
σ'2
σ2
σ'3
σ3
E'n(xn+1,yn)
En(xn,yn+1)
Sn
σ'n
σn
En+1(xn+1,yn+2)
En+1(xn+2,yn+1)

Figure 19.

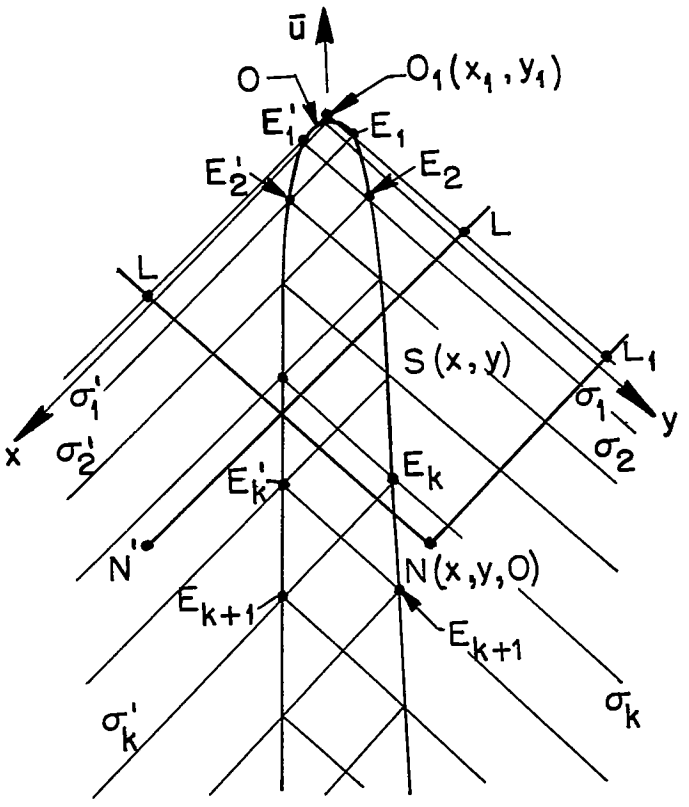
ū
O
$O_1(x_1, y_1)$
E_1'
E_1
E_2'
E_2
L
L
L_1
S (x, y)
σ_1'
σ_1
x
y
σ_2'
σ_2
E_k'
E_k
N'
N (x, y, O)
E_{k+1}
E_{k+1}
σ_k'
σ_k

Figure 20.

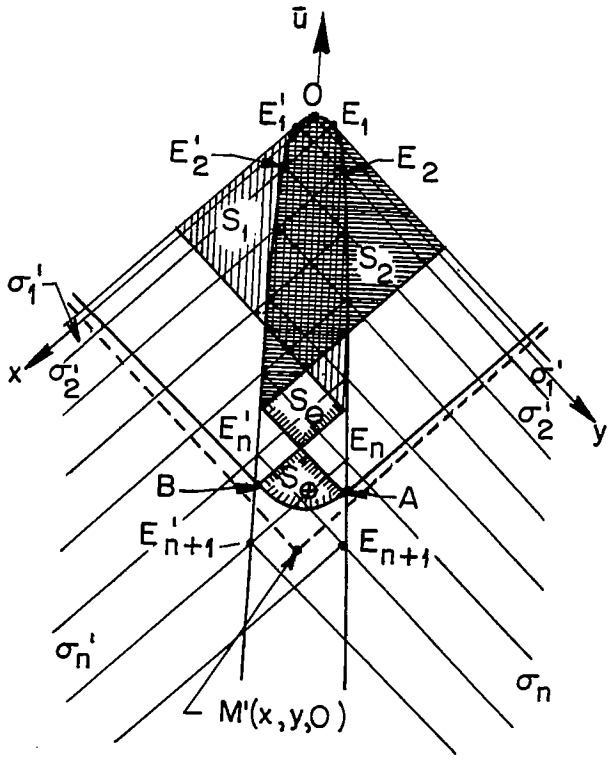

Figure 21.

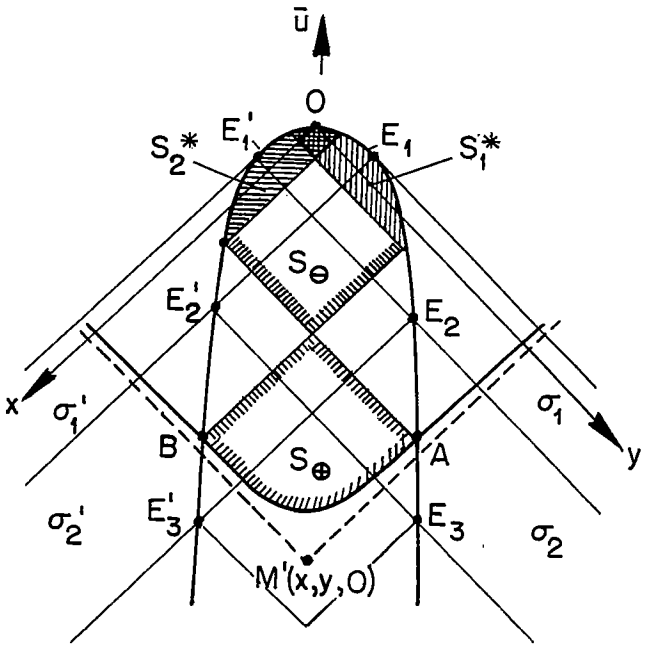

Figure 22.

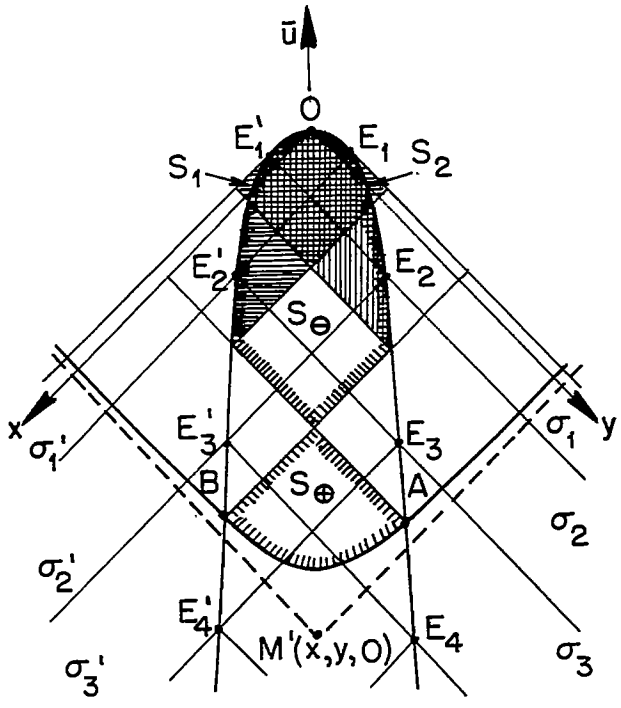

Figure 23.

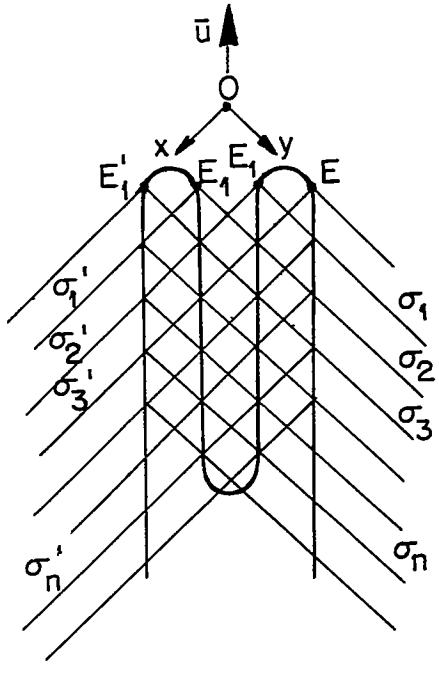

Figure 24.

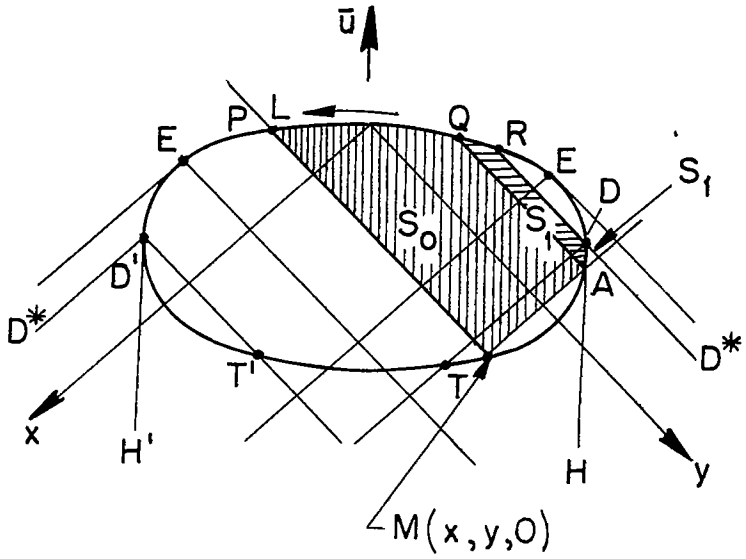

Figure 25.

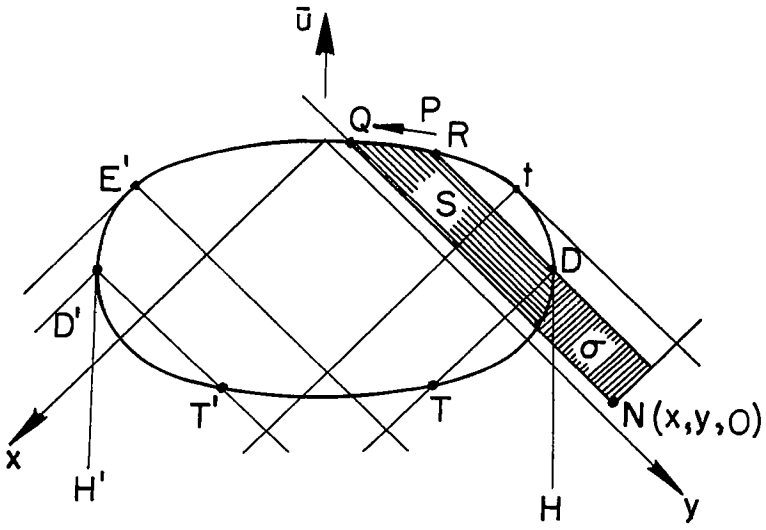

Figure 26.

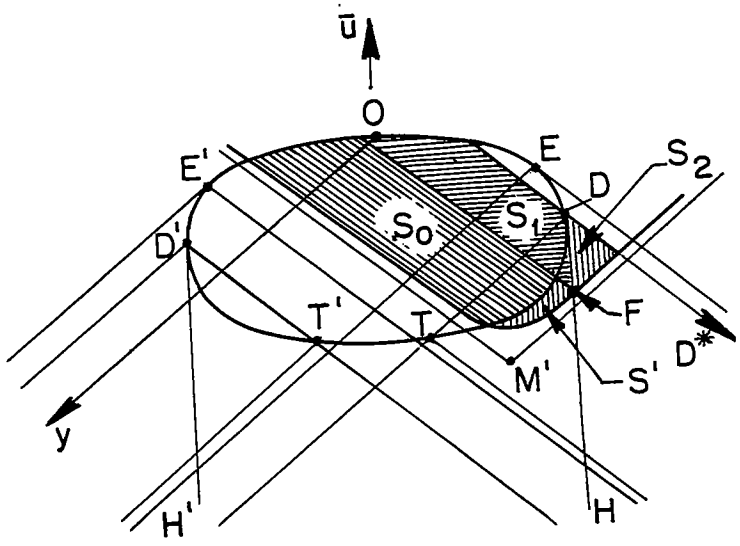

Figure 26(a).

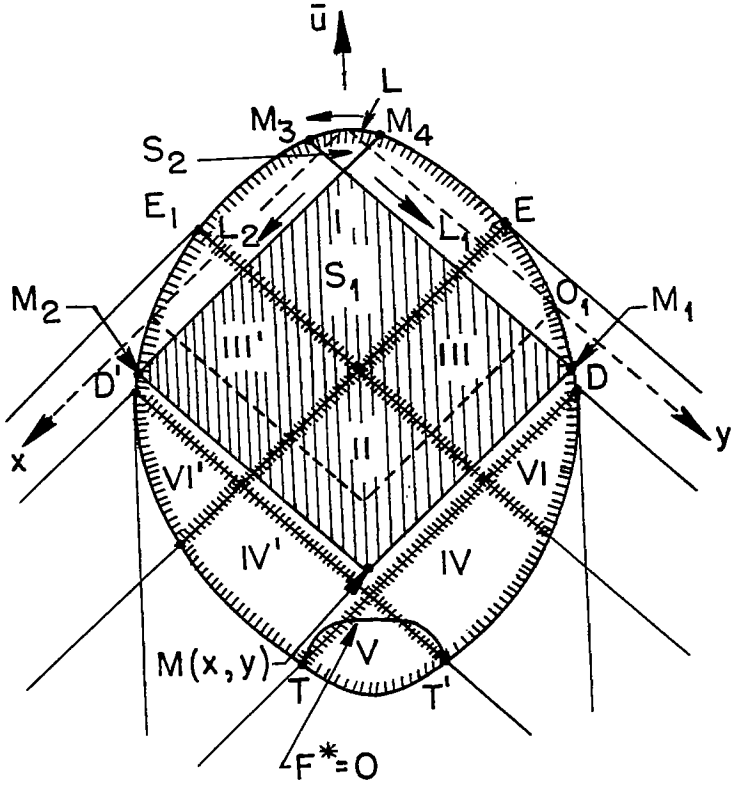

Figure 27.

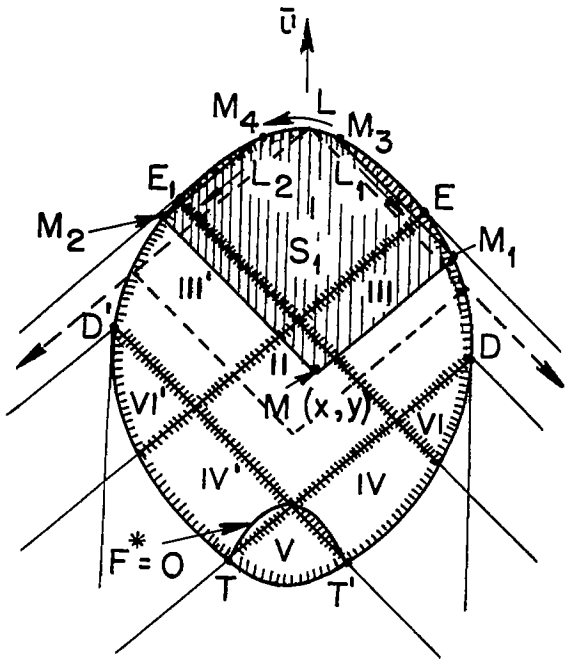

Figure 28.

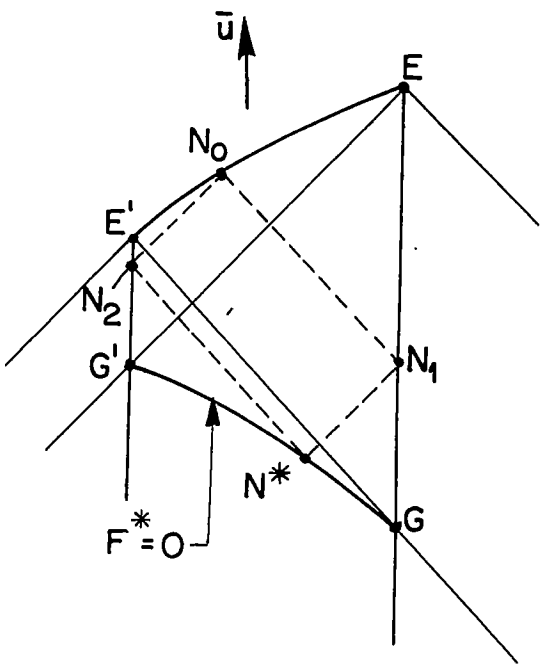

Figure 29.

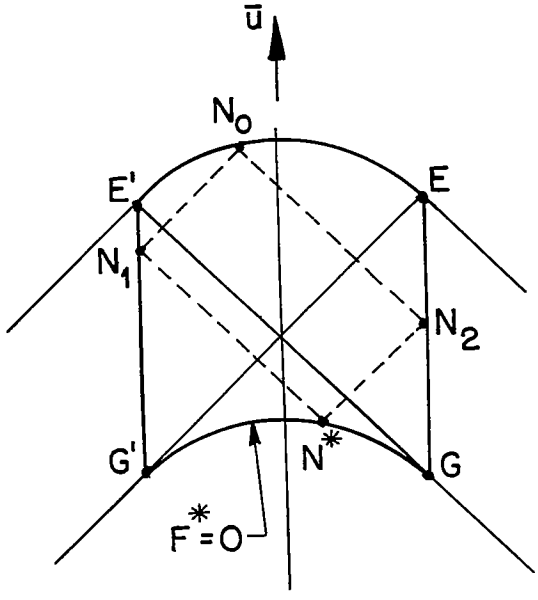

Figure 30.

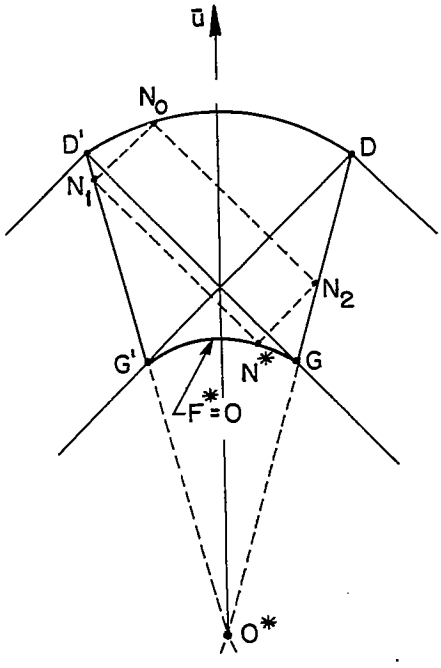

Figure 31.

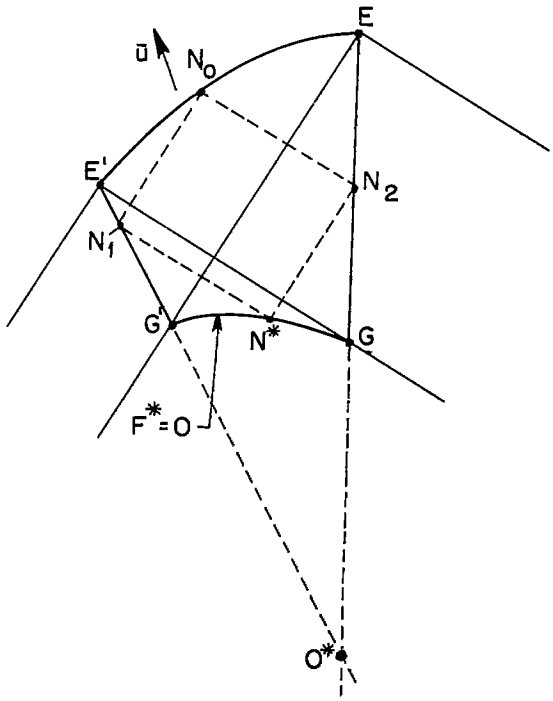

Figure 32.

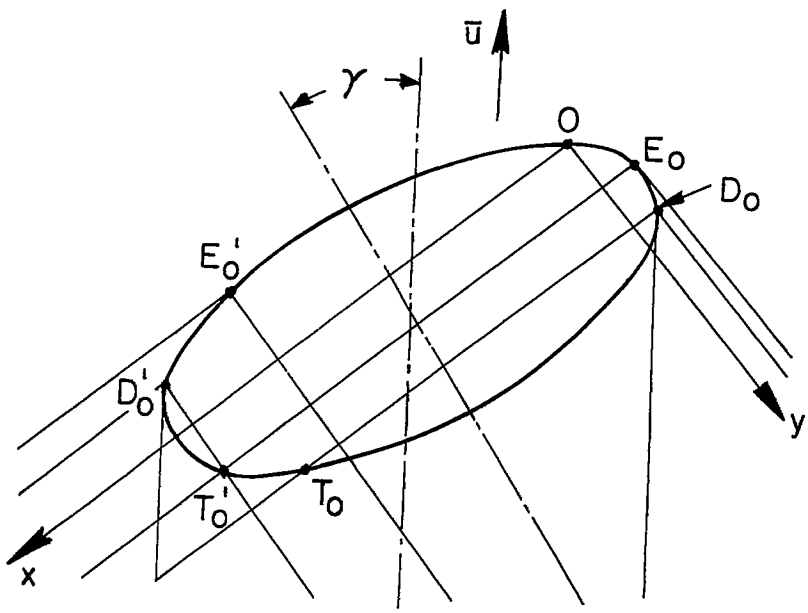

Figure 33.

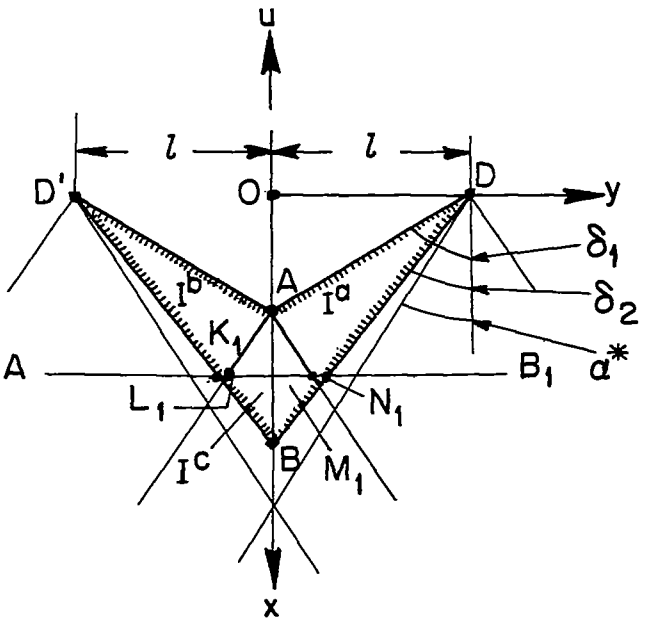

Figure 34.

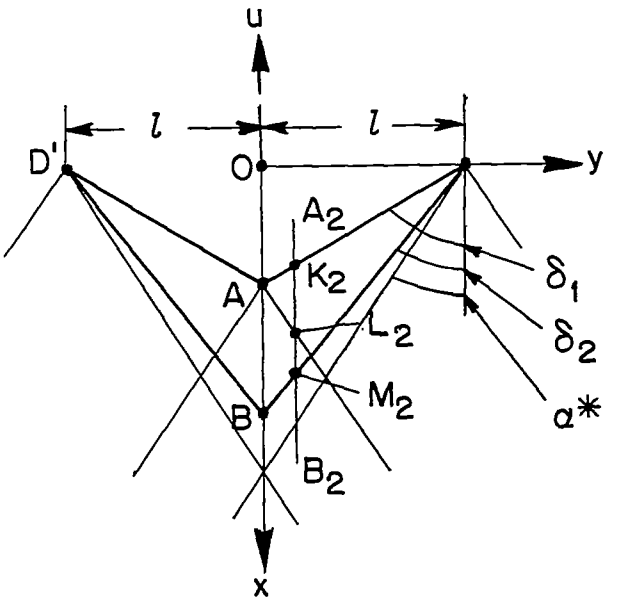

Figure 35.

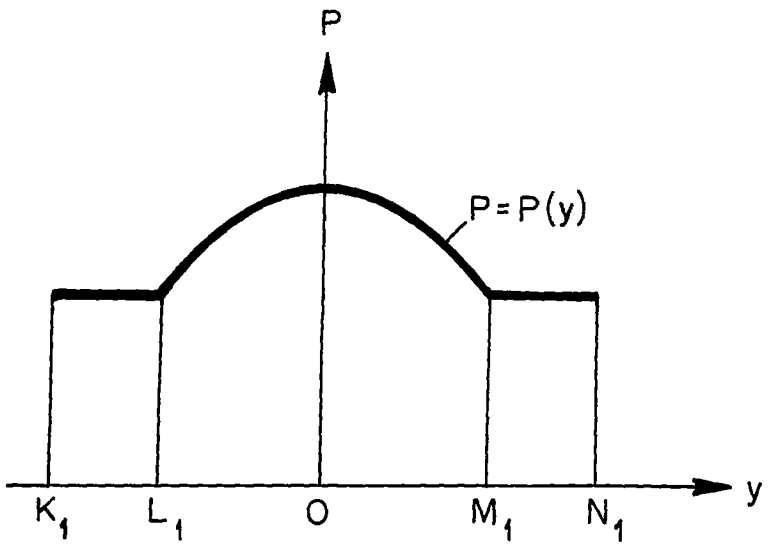

Figure 36.

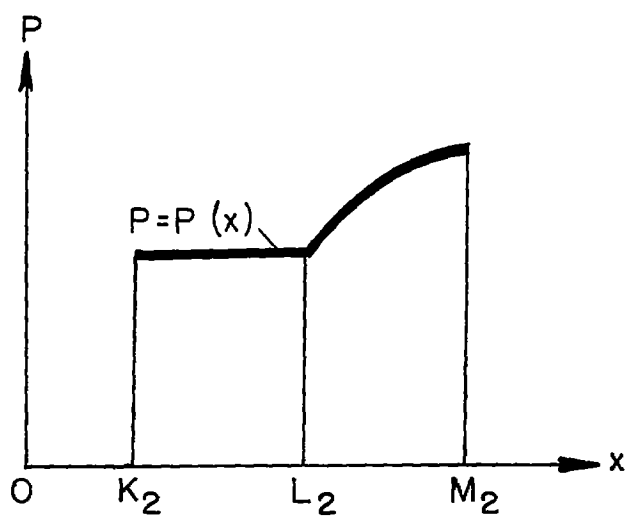

Figure 37.

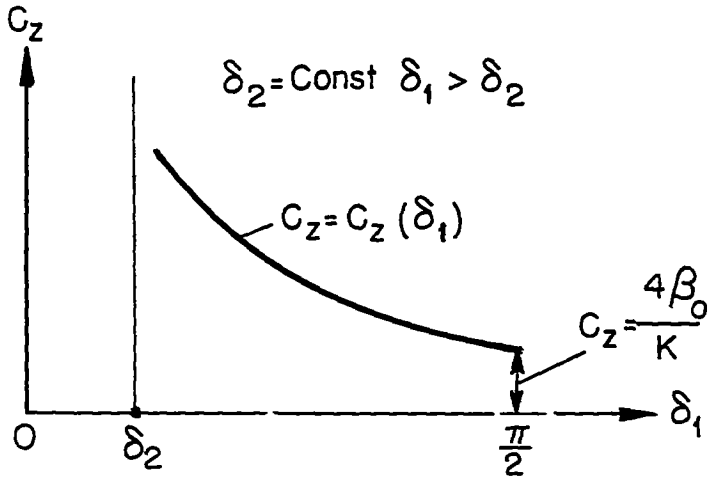

Figure 38.

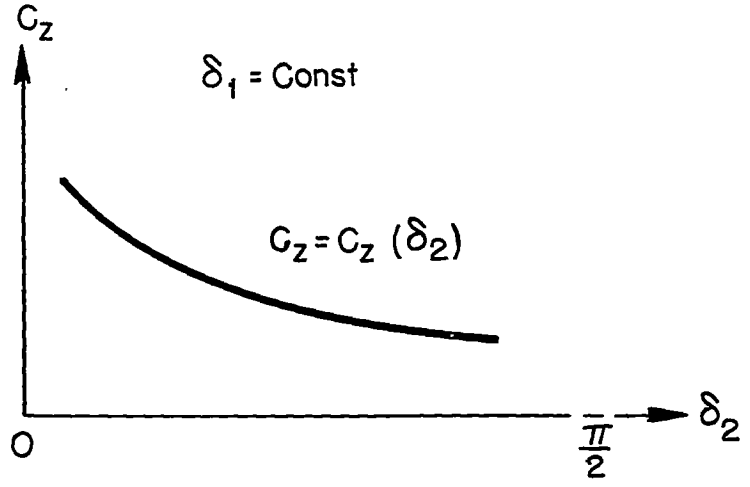

Figure 39.

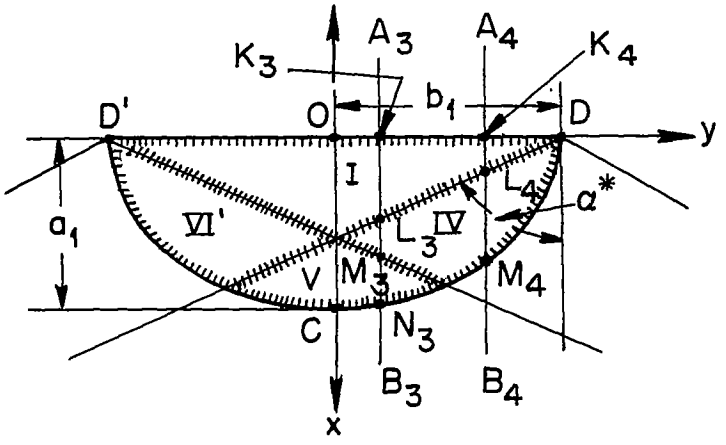

Figure 40.

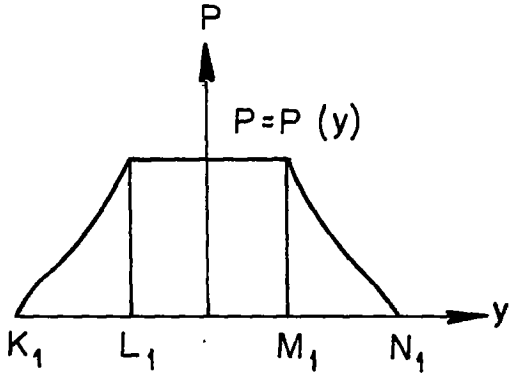

Figure 41.

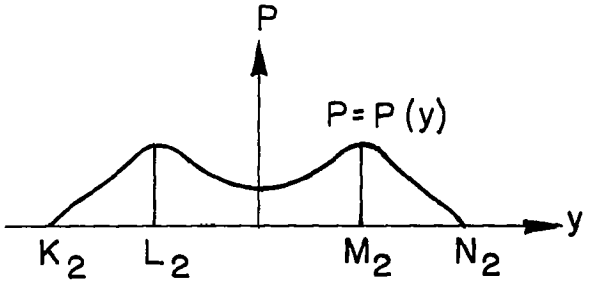

Figure 42.

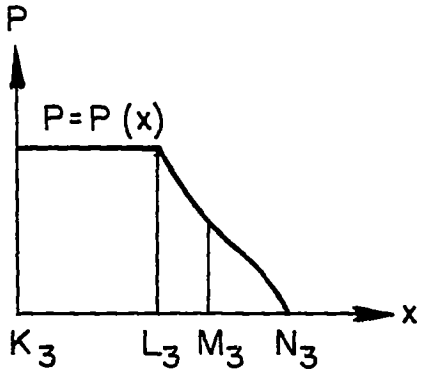

Figure 43.

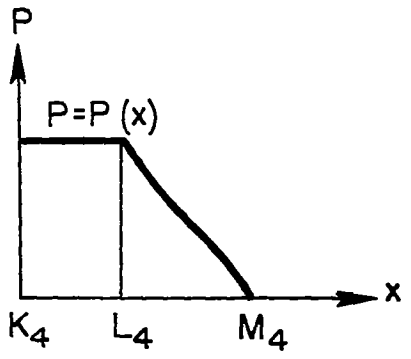

Figure 44.

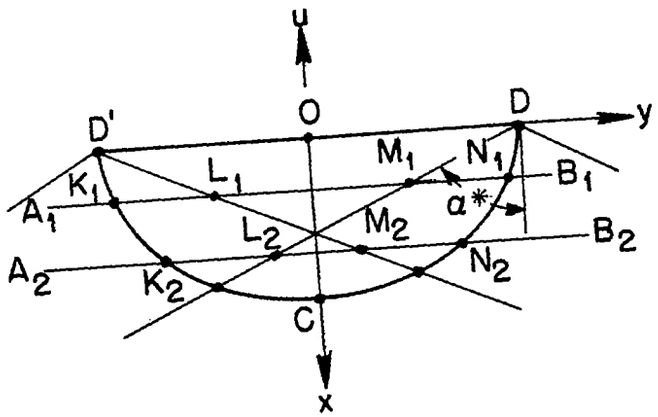

Figure 45.

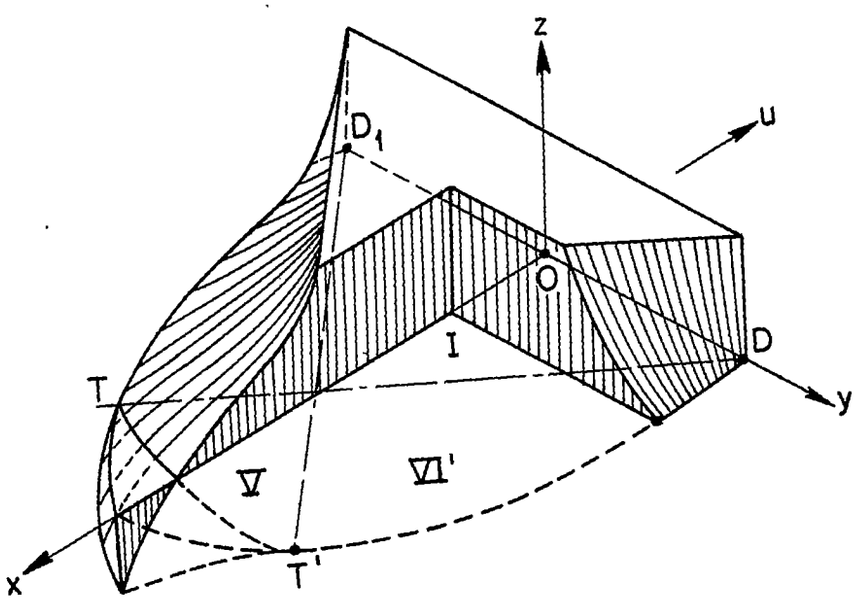

Figure 46.

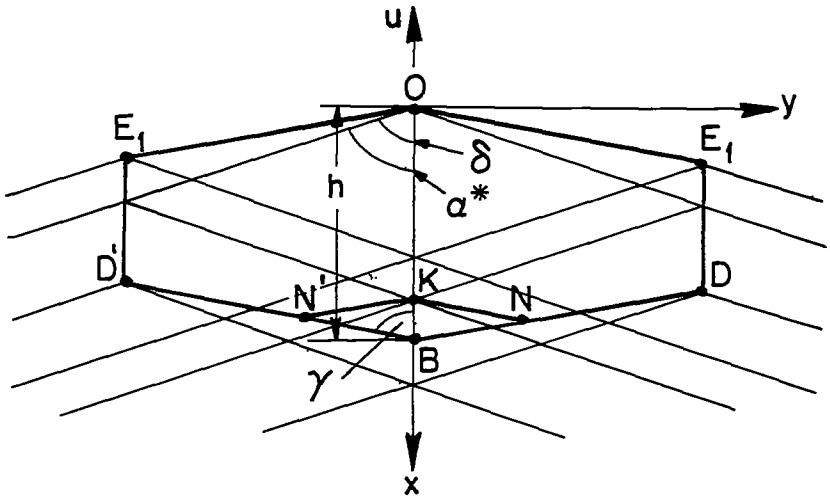

Figure 47.

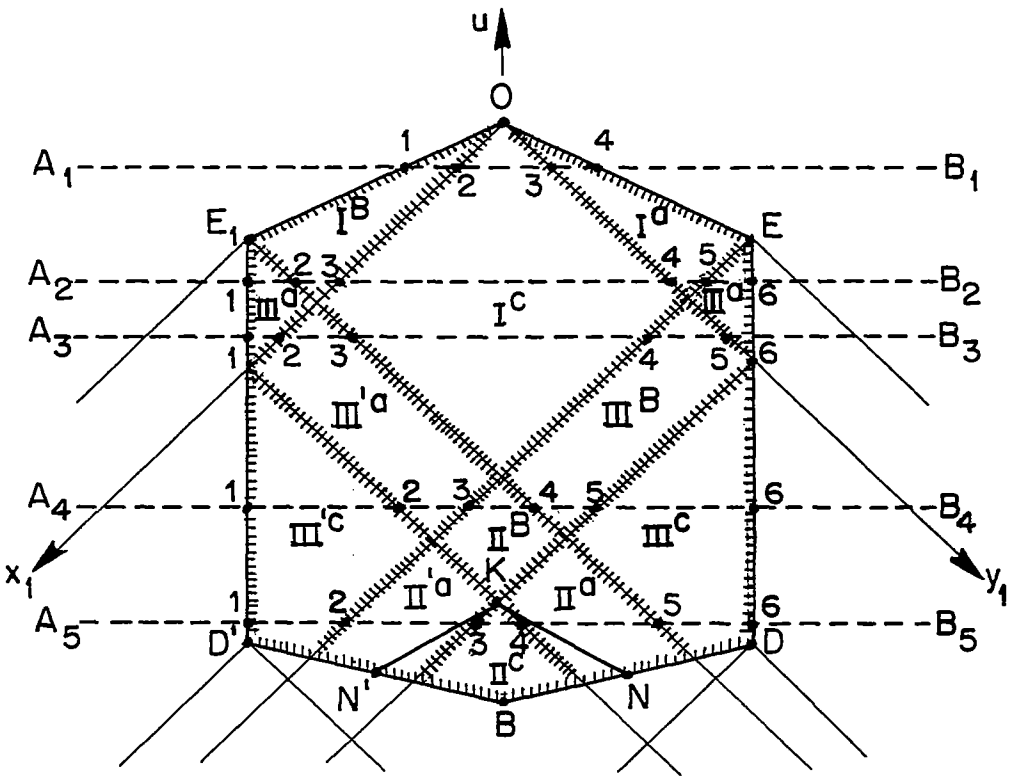

Figure 48.

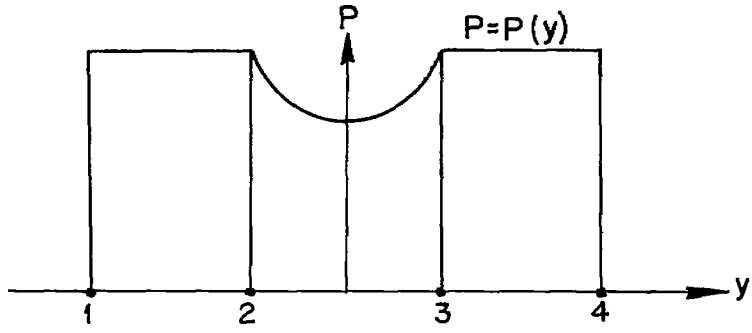

Figure 49.

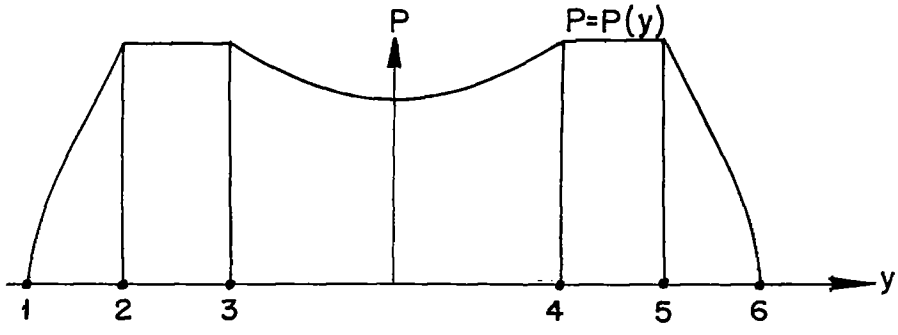

Figure 50.

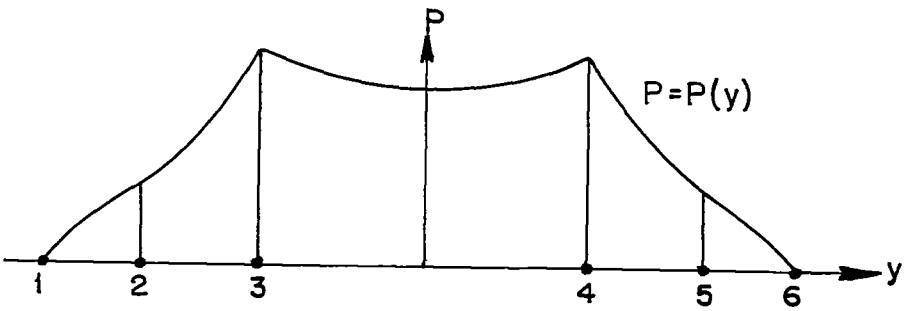

Figure 51.

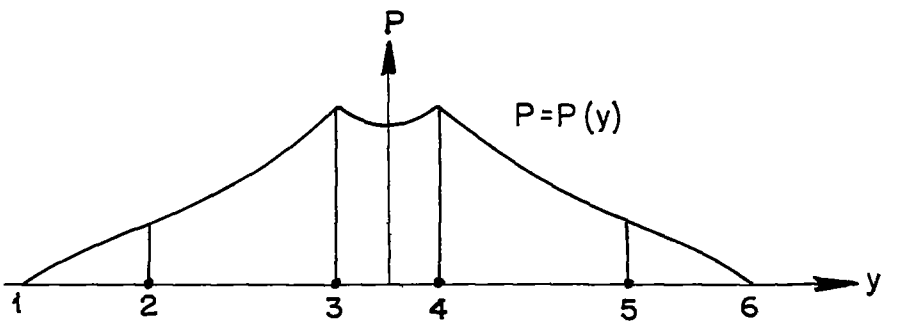

Figure 52.

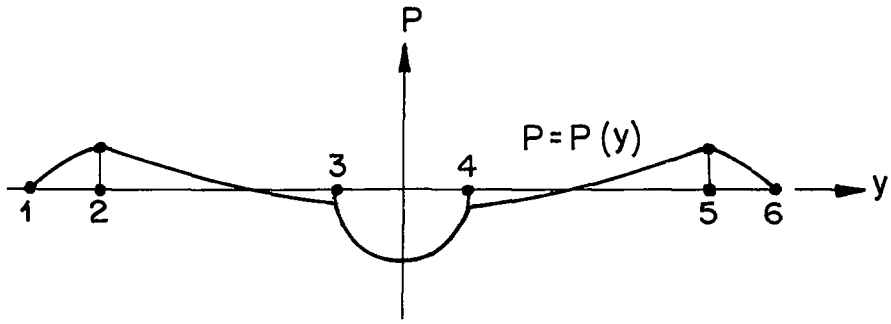

Figure 53.

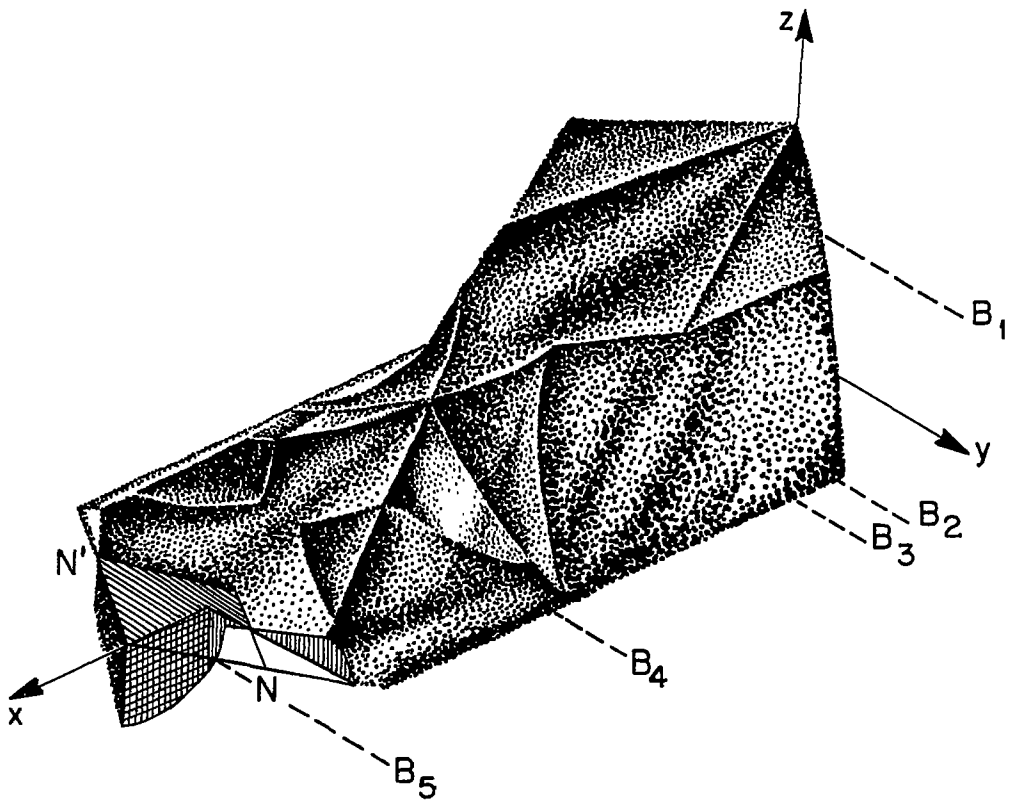

Figure 54.