NACA TM 1395

7951

TECH LIBRARY KAFB, NM

0144471

NATIONAL ADVISORY COMMITTEE FOR AERONAUTICS

TECHNICAL MEMORANDUM 1395

THE FATIGUE STRENGTH OF RIVETED JOINTS AND LUGS

By J. Schijve

Translation of "De vermoeiïngssterkte van
Klinkverbindingen en pengatverbindingen."
Nationaal Luchtvaartlaboratorium,
Rapport M.1952, May 1954.

Washington
August 1956

TECH LIBRARY KAFB, NM
0144471

NATIONAL ADVISORY COMMITTEE FOR AERONAUTICS

TECHNICAL MEMORANDUM 1395

THE FATIGUE STRENGTH OF RIVETED JOINTS AND LUGS*

By J. Schijve

SUMMARY

It is considered which fatigue data will generally be of interest to the designer. Only a certain part of the fatigue-diagram is important.

At the N. L. L. some series of experiments on riveted joints and lugs have been performed. However, these do not completely cover the important part of the fatigue diagram and more experiments are recommended.

A short discussion is given on the stress concentration factor K_t and three fatigue strength reduction factors, K_f, defined in different ways. The relation between K_f and K_t is considered.

The various factors which might influence the fatigue strength of riveted joints are reviewed. For lugs the most interesting experiments and the methods to improve the fatigue strength are discussed.

The following points are recommended for further investigation.

(1) The completing of the fatigue diagram of a riveted joint of 24 ST Alclad with two rows of rivets.

(2) The determination of the fatigue diagram of lugs with different stress concentration factors.

(3) The investigation of the influence on the fatigue strength of the bending of the pin of a lug.

(4) Further investigation on some methods to improve the fatigue strength of lugs.

(5) An investigation whether notches of different types but with the same theoretical stress concentration factor might have the same or nearly the same fatigue strength reduction factor.

*"De vermoeiingssterkte van Klinkverbindingen en pengatverbindingen." Nationaal Luchtvaartlaboratorium, Rapport M.1952, May 1954.

1. INTRODUCTION

This report deals with a number of tests on riveted joints and lugs made by the NLL for the primary purpose of comparing the several types of riveted joints and to study the effect of various factors on the fatigue strength of lugs. The application of single pulsating tension loads presented no difficulty. But it is obvious that such tests give the designer not enough information about the fatigue strength for the combinations of mean load and alternating loads encountered in practice.

Before setting up a program for any further fatigue investigation, a study of available literature was indicated. The aim was to check the extent of the data on fatigue strength supplemental to the findings of the NLL.

The present report may be regarded as a continuation of report S.357 (ref. 25), sections 5.1 and 5.2 and report S.381 (ref. 26), section 4.

An attempt was made at the same time to establish some general conclusions regarding the effect which various factors have on the fatigue strength of the cited joints.

A check was made to ascertain whether an estimate of the fatigue life of a given joint at a certain loading could be made from the dimensions of the joint and the fatigue data of the unnotched material.

The literature study was made at the request of the N.I.V.

NOTATIONS

σ_E	Young's modulus	All stresses are nominal.
$\sigma_{0.2}$	0.2 percent elastic limit	
σ_b	tensile strength	
σ_{min}	minimum stress	
σ_{max}	maximum stress	
σ_w	alternating stress	
σ_{w0}	alternating stress at $\bar{\sigma} = 0$	
$\bar{\sigma}$	mean stress	

R	$\frac{\sigma_{min}}{\sigma_{max}}$
N	number of stress cycles after which failure occurs at a certain $\bar{\sigma}$ and $\bar{\sigma}_w$
K_t	theoretical stress concentration factor = $\frac{\text{peak stress in a notched section}}{\bar{\sigma}}$
K_f	effective stress concentration factor
$\bar{K}_f$, K_f', K_f''	See section 3.2
d	hole, rivet, or pin diameter
s	pitch of rivet
t	thickness of sheet
b	width of lug (See figure 5.2)
h	height of head of lug edge (See figure 5.2)

2. FATIGUE DIAGRAM

The complete fatigue data of a material or a joint can be represented by a diagram in many ways. Two current equivalent methods are:[1]

(a) Plotting the maximum stress (σ_{max}) and minimum (σ_{min}) against the mean stress ($\bar{\sigma}$) at constant fatigue life

[1]In the present report the term "fatigue diagram" is used; it is also known as Smith diagram, Goodman diagram. The fatigue curve gives the graph in which the fatigue strength is plotted against fatigue life. This curve is also called Wöhler curve and in English literature "S-N curve."

as proved by figure 2.3. In general, stresses which are little lower than the ultimate stress, can, if not continued long, be sustained up to 10^3 to 10^4 times, hence seem to justify the conclusion that the dangerous stresses are those belonging to a fatigue curve at $N \geq 10^5$. The danger lies not so much in their magnitude as in their multiplicity of occurrence. It should also be noted that this holds only for components for which the alternating stresses are primarily of gust origin. This actually is the case on many joints in transport planes. Figure 2.3 illustrates such a damage distribution.

The determination of the N-curves in a fatigue diagram can be simplified by assuming a fixed algebraic relation for these curves, as several researchers have done. The most widely known methods are

(1) The modified Goodman diagram

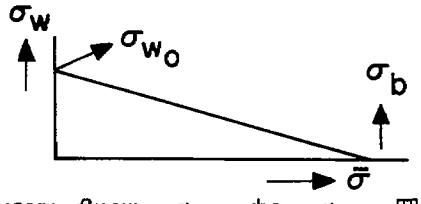

A straight line is drawn from σ_{w_0} to σ_b. This approach seems to be on the safe side according to the majority of tests. This also holds for joints, because the static-yield pattern is generally different from the fatigue-collapse pattern. (See 4.1.)

(2) σ_w is independent of $\bar{\sigma}$.

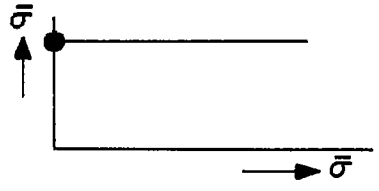

It is obvious that this cannot be correct at high $\bar{\sigma}$. But for a slender diagram it may be a good approximation over a considerable part of the diagram, especially at high N.

(3) In reality, the N-curves lie between these two approximations. A suitable formula for it was given by Gerber; it assumes a parabolic distribution, i.e.,

$$\sigma_w = \sigma_{w_0}\left[1 - \left(\frac{\bar{\sigma}}{\sigma_b}\right)^2\right]$$

R	$\frac{\sigma_{min}}{\sigma_{max}}$
N	number of stress cycles after which failure occurs at a certain $\bar{\sigma}$ and $\bar{\sigma}_w$
K_t	theoretical stress concentration factor = $\frac{\text{peak stress in a notched section}}{\bar{\sigma}}$
K_f	effective stress concentration factor
$\bar{K}_f$, K_f', K_f''	See section 3.2
d	hole, rivet, or pin diameter
s	pitch of rivet
t	thickness of sheet
b	width of lug
h	height of head of lug edge

See figure 5.2

2. FATIGUE DIAGRAM

The complete fatigue data of a material or a joint can be represented by a diagram in many ways. Two current equivalent methods are:[1]

(a) Plotting the maximum stress (σ_{max}) and minimum (σ_{min}) against the mean stress ($\bar{\sigma}$) at constant fatigue life

---

[1]In the present report the term "fatigue diagram" is used; it is also known as Smith diagram, Goodman diagram. The fatigue curve gives the graph in which the fatigue strength is plotted against fatigue life. This curve is also called Wöhler curve and in English literature "S-N curve."

(b) Plotting the alternating stress (σ_w) against mean stress ($\bar{\sigma}$) at constant fatigue life.

The latter is chosen in this report because lines can be drawn in a more reliable manner along a number of test points for the slender fatigue diagrams (i.e., σ_w small compared to σ_b), which are the rule on notched material.

All the tests made in the NLL so far, were made at nearly constant R

$$R = \frac{\text{minimum stress}}{\text{maximum stress}}$$

In the NLL tests, R = 0 (at least approximately, the minimum load was, as a rule, a little above zero). Several foreign laboratories report tests at constant R too. Tests were also carried out under constant mean load.

In the fatigue diagram the points with identical R lie on straight lines through the origin. At angle α formed by these lines with the $\bar{\sigma}$ axis

$$\tan \alpha = \frac{1 - R}{1 + R}$$

is applicable.

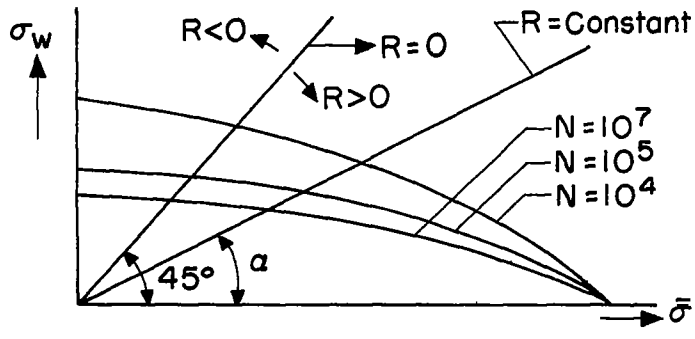

In the zone where $R < 0$, $\sigma_{min} < 0$, and $\sigma_{max} > 0$.

Figures 2.1 and 2.2 represent two fatigue diagrams for single-row lap joints of 24 St and 75 St alclad, taken from NACA TN 1485 (ref. 29). These two diagrams are not complete. The curves for high N are very incomplete. This is the result of making the tests at constant R. Since, in practice, the fatigue strength at an essentially constant mean load (nonaccelerated horizontal flight) is of greatest interest, at least

for commercial aircraft, it is recommended to make the tests at constant mean load, i.e., make vertical cross sections of the fatigue diagram.

Not every part of the fatigue diagram is of equal importance. Starting from the original R.A.E. fatigue criterion (ref. 32), only the curve $N = 2 \times 10^6$ is actually of interest. Starting, say, from a certain mean load when trying to define the fatigue life on the basis of a cumulative-damage calculation, it serves no useful purpose to know the permissible alternating stress at a certain mean stress for a short fatigue life as the permissible alternating stress for a long fatigue life (high N) is not known. But in figures 2.1 and 2.2 this is the case for a wide range of mean stresses. The right boundary of the zone that must be known is therefore not an R = constant curve, but a vertical curve. This is one more reason in favor of vertical sections of the fatigue diagram.

The range of negative R is generally of little importance. The repeatedly occurring alternating stresses on joints are no greater than the mean load, hence σ_{max} and σ_{min} should have the same sign - i.e., $R > 0$. The more higher alternating loads at which $R < 0$ do relatively little damage. The subject will be discussed later.

A combination of high mean load with low alternating load is comparatively rare.

Of greatest interest is thus the area immediately to the right of the line $R = 0$ (shaded area in the plot). In that area the results of the NLL need complementation. And this is done best by vertical cross sections and two cross sections are probably sufficient.

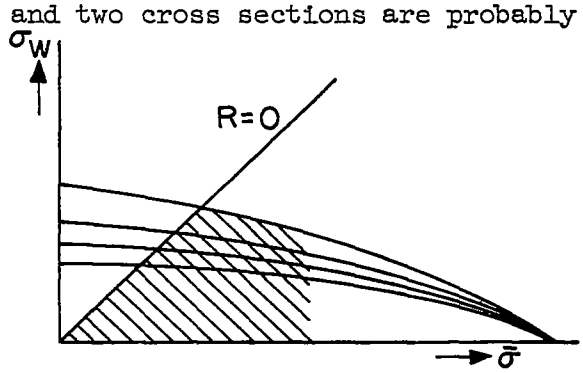

For a calculation of the fatigue life at a certain load spectrum by means of a criterion of failure such as the cumulative-damage hypothesis, all the N-curves are required. Such calculations have been published by Jackson and Grover (ref. 21), Wills (ref. 37), Wallgren (ref. 33), and Taylor (ref. 31). From their calculations it follows that the curves for average or long fatigue life are of primary importance, since the fatigue damage at the corresponding loads is greatest,

as proved by figure 2.3. In general, stresses which are little lower than the ultimate stress, can, if not continued long, be sustained up to 10^3 to 10^4 times, hence seem to justify the conclusion that the dangerous stresses are those belonging to a fatigue curve at $N \geq 10^5$. The danger lies not so much in their magnitude as in their multiplicity of occurrence. It should also be noted that this holds only for components for which the alternating stresses are primarily of gust origin. This actually is the case on many joints in transport planes. Figure 2.3 illustrates such a damage distribution.

The determination of the N-curves in a fatigue diagram can be simplified by assuming a fixed algebraic relation for these curves, as several researchers have done. The most widely known methods are

(1) The modified Goodman diagram

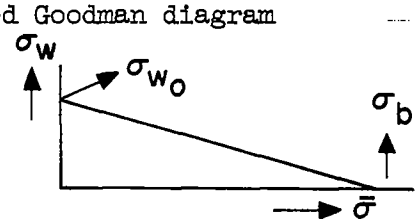

A straight line is drawn from σ_{w_0} to σ_b. This approach seems to be on the safe side according to the majority of tests. This also holds for joints, because the static-yield pattern is generally different from the fatigue-collapse pattern. (See 4.1.)

(2) σ_w is independent of $\bar{\sigma}$.

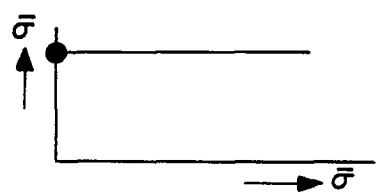

It is obvious that this cannot be correct at high $\bar{\sigma}$. But for a slender diagram it may be a good approximation over a considerable part of the diagram, especially at high N.

(3) In reality, the N-curves lie between these two approximations. A suitable formula for it was given by Gerber; it assumes a parabolic distribution, i.e.,

$$\sigma_w = \sigma_{w_0}\left[1 - \left(\frac{\bar{\sigma}}{\sigma_b}\right)^2\right]$$

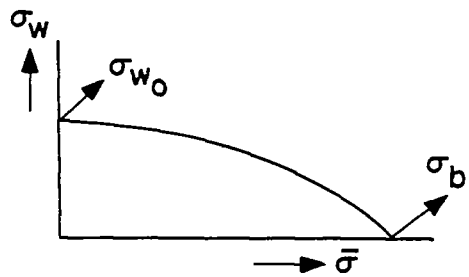

Willis (ref. 37) thinks that this supposition is rather optimistic. It is always recommended to define the N-curves from more than two test points.

It will be observed that at low $\bar{\sigma}$ these lines are slightly curved and that at high $\bar{\sigma}$ it applies so much longer as N is greater.

The experiments with mean compressive load are few, although there are many joints in a wing which have a mean compressive load. It can be assumed that at mean compressive stress the permissible alternating stress is independent of $\bar{\sigma}$, provided that $\left|\bar{\sigma} + \sigma_w\right| < \left|\sigma_{0.2\text{compression}}\right|$. One safe assumption is that the Smith diagram for negative $\bar{\sigma}$ is the same as that for positive $\bar{\sigma}$, as reflected with respect to the σ_w axis. This is apparent from the test by Wållgren (ref. 35) with notched and unnotched specimens.

3. RELATIONSHIP BETWEEN THEORETICAL (K_t) and effective STRESS CONCENTRATION FACTOR (K_f)

The purpose of this section is to ascertain the extent to which the fatigue life of a joint can be predicted from the geometrical configuration of a joint and the fatigue characteristics of unnotched material.

Theoretically the following method is available:

(1) The dimensions of the joint define K_t.

(2) Between K_t and K_f there exists a certain relationship, which must be determined by experiment.

(3) With K_f and the fatigue data of the unnotched material the fatigue data of the joint are computed. The proposed mode of calculation

is to yield the fatigue diagram of the joint from the fatigue diagram of the unnotched material.

It will be seen that the application of this method presents many difficulties.

3.1. Determination of K_t

K_t can be computed for different notch forms, or an experimental definition by various methods is possible (ref. 25). However, K_t is not known for many notch shapes. For the majority of joints there is no known K_t at all. Some relevant data may be found in the report by Frocht (ref. 8).

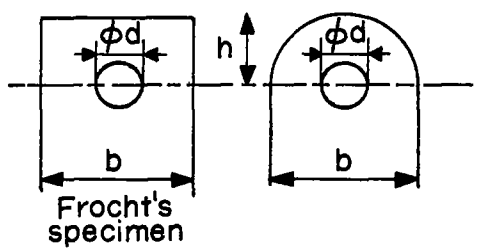

They refer to a rectangular bar loaded by a bolt. The graph is reproduced in figure 3.1. But the load was perfectly symmetrical, as is the case on a lug and in double shear joints, but not on a lap joint, where K_t is unknown. For it also is dependent on the rivet pattern, riveting method, dimpling, or drilling of the sheet, etc.

On symmetrically loaded lugs, the conditions are more favorable. Frocht's findings refer to rectangular bars and are therefore not directly applicable to lugs. Theoretically it is therefore not correct to deduce K_t from figure 3.1. But it can be assumed that the thus obtained K_t gives a practical measure for the stress concentration factor.

This seems to be even more justified, as figure 3.1 shows that the effect of h/b is small.

Aside from the proportional numbers d/b and h/b, the sheet thickness itself may play a part also. This depends upon the stiffness of the bolt. The bolt is loaded in bending and in consequence of the deflection, the sheet pressure which the bolt exerts on the hole is not constant over the sheet thickness, but produces additional stresses on the sheet surface. In connection herewith a high value of d/t (i.e., a relatively thin sheet) will be favorable. It also is beneficial to

choose stiffer bolt material than sheet material. In airplane construction the sheet material is usually duralumin and the bolt of steel.

The flexural rigidity of the bolt is proportional to d^4. For greater sheet thickness and constant stress in the sheet, the bending moment is approximately proportional to t^2. Small t and great d are favorable, but increase in d has more effect than decrease in t. How great the effect of both factors is, is difficult to calculate. The experimentally defined K_t values were all measured on comparatively thin sheet and a large diameter bolt. The bending effect is said to have played no role. It also was scarcely noticed in static tensile tests, but perceptibly in fatigue tests under light load. Some information is obtainable from Wållgren's tests (ref. 34). He obtained fatigue limits which were so low that it cannot be explained by the stress concentration of the hole alone. Wållgren attributed it to bending of the bolt. He found further that an increase in sheet thickness produced a decrease in fatigue limit.

The fit of the lug also has some effect on K_t. In a loose fit the pin carries the load more locally along its circumference and this increases K_t somewhat according to Frocht (ref. 8). For interference fit, the conditions for K_t are rather favorable. The differences are not very great. It was proved by tests (refs. 6 and 18) that the fit hardly has any effect on the fatigue strength when the interference exceeds a certain limit value. It may be assumed that below this limit value, the K_t factor itself is little affected. The interference fits that do affect the fatigue strength are neglected here for the time being.

From the foregoing it is apparent that d/b is not the only parameter that defines K_t, although it is the predominant parameter. The other factors that affect K_t are h/b, the stiffness of the pin with respect to the sheet, and the fit.

The effect of h/b is shown in figure 3.1 and may be assumed to be known. The effect of the fit is small. The effect of pin bending can be held down by using thin sheet and large pins. However, these two requirements are contradictory from static strength considerations. Allowance must be made for a stress concentration action as a result of the bending of the pin. Wållgren indicated this effect (ref. 34) but his specimens were not suitably dimensioned and collapsed statically by shearing of the pin. With a larger pin diameter the bending effect of the pin in fatigue was lower.

The K_t value from the Frocht plot for the pin joint is acceptable, only with a certain reserve, even if the deflection of the pin is disregarded. This is not encouraging, but neither can it be considered as an unexpected result.

An investigation of the effect of pin diameter and plate thickness on the K_t values of a pin joint is desirable.

3.2. The K_t-K_f Relationship

In general, K_f is defined as the quotient of the fatigue strength of the unnotched and the notched material; the strength is referred to the net cross section in the present report.

When $\bar{\sigma} \neq 0$ and $\sigma_{min} \neq 0$, the given definition is not complete. We shall examine this a little closer. For the present the following consideration holds only at $\bar{\sigma} = 0$ (pure alternating load) or $\sigma_{min} = 0$ (pulsating tension).

Factor K_f defines the relationship between the fatigue characteristics of notched and plain material. When K_f is known the first can be computed from the last, or, in other words, K_f governs the transformation of the fatigue diagram of the unnotched into that of the notched material.

Obviously, this transformation is dependent on the notch shape, i.e., K_f is a function of K_t. But the question is whether K_f itself completely characterizes the notch effect at fatigue, or, in other words, whether two different notch shapes with the same K_t value also give the same K_f under certain conditions. Lipson (ref. 22) thinks that this actually is the case, but his proof material is not convincing. Reference 11 also reviews the problem and the fatigue diagrams given in it raise the impression that notch shape effect does, in fact, definitely exist.

Theoretically, there is no reason to assume that the shape of the notch does not affect K_f. The peak stress in the critical cross section at completely elastic behavior is $K_t\sigma_{max}$. Moreover, if the very first beginning of tearing is regarded as the endurance limit, we get $K_t = K_f$. At a stress concentration of some significance the peak stress exceeds the elastic limit which is accompanied by yielding and strain hardening. The peak stress is then smaller than $K_t\sigma_{max}$. The amount of lower stresses and the manner in which strain hardening occurs will depend

upon the notch shape, but it is conceivable that this is extremely little dependent on the shape of the notch.

The problem would be simpler if the relationship between K_f and K_t were independent of notch form. An experimental check is recommended, but it will be very expensive. For K_f is the quotient of two fatigue strengths. The potential scatter in K_f is therefore great and many tests are necessary. It also is the reason why the available literature offers so little support in this respect.

It is obvious from the foregoing that when local yielding occurs it is to be expected that K_f is then smaller than K_t, as is readily apparent from figure 3.2 which shows the K_t-K_f relation on two kinds of steel. The K_t-K_f curve touches the line $K_t = K_f$, but still diverges from it quickly. At increasing K_t the $\frac{dK_f}{dK_t}$ continues to decrease. The divergence of soft material from K_t-K_f line is faster than of hard, tough material.

For lap seams, K_t is unknown, hence no K_t-K_f relation is known. For double-shear seams with a $\left(\frac{d}{s}\right)$ ratio (rivet diameter/pitch) of $\frac{1}{5}$, K_t is approximately 5.5; for lap seams of the same $\frac{d}{s}$, K_t is considerably higher. At such a high K_t and a small $\frac{dK_f}{dK_t}$, a change in K_t produces only a small change in K_f. The different variables that define K_t at a rivet joint, such as $\frac{d}{s}$, thickness of sheet, type of rivet, etc., have, therefore, no great effect on K_f individually, but probably affect K_f considerably when in combination. They are discussed in section 4.

K_f is defined as quotient of two fatigue strengths. But as soon as $\bar{\sigma} \neq 0$, or $\sigma_{min} \neq 0$, this definition is insufficient. Following are three definitions taken from reference 11.

$$K_f = \frac{\sigma_{max} \text{ on unnotched material}}{\sigma_{max} \text{ on notched material at identical } R \text{ and } N} \tag{3.1}$$

N.B. In this definition σ_{max} may be replaced by σ_w or $\bar{\sigma}$ in the numerator and denominator.

$$K_f' = \frac{\sigma_w \text{ on unnotched material}}{\sigma_w \text{ on notched material at same } \bar{\sigma} \text{ and } N} \tag{3.2}$$

$$K_f'' = \frac{\sigma_{max} \text{ on unnotched material}}{\sigma_{max} \text{ on notched material at the same } \bar{\sigma} \text{ and } N} \tag{3.3}$$

At $\bar{\sigma} = \sigma$, $K_f = K_f' = K_f''$.

On theoretical consideration it is not possible to give one of these definitions the preference. The question of which K_f is best suitable for the problem involved is more realistic. A committee of the American Society for Testing Materials (ref. 24) gives as their opinion that K_f' is less variable than K_f. Wallgren (ref. 35) seems to draw the opposite conclusions from his experiments. But he proves it for only one specific K_t (i.e., $K_t = 2.05$). Moreover, it should be borne in mind that in the determination of K_f' two alternating stresses are involved, which as a rule, are smaller than the maximum stresses, so that the possible scatter of K_f' is greater than that of K_f.

Figure 3.3 represents two imaginary fatigue diagrams, one on unnotched and one on notched material with a specific K_t, along with the three different K_f factors. According to this graph we can write

$$K_f = f(K_t, \alpha, N)$$

Actually

$$\tan \alpha = \frac{1 - R}{1 + R}$$

$$K_f = f(K_t, R, N) \tag{3.4}$$

Likewise

$$K_f' = f'(K_t, \bar{\sigma}, N) \tag{3.5}$$

$$K_f'' = f''(K_t, \bar{\sigma}, N) \tag{3.6}$$

Thus, in principle, the effective stress concentration factor is not only dependent upon K_t, but also on two other variables. On top of that, the relations (3.4), (3.5), and (3.6) were formed as if the shape of the notch did not affect K_t, whereas, in reality, it must still be included.

The number of variables in (3.4), (3.5), and (3.6) still is so great that the experimental solution of these relations fails to offer any advantages. At least one of the variables must be eliminated, i.e., it must have a negligible influence. This cannot be said, in every case, of K_t, nor of N. However, at very low N the notch effect practically disappears. That $K_f(K_f', K_f'')$ actually depends on N is readily apparent from tables 5.1 and 5.3, somewhat less from table 3.1.

The three following relations are considered applicable:

$$K_f = f(K_t, N) \text{ independent of } R \tag{3.7}$$

$$K_f' = f'(K_t, N) \text{ independent of } \overline{\sigma} \tag{3.8}$$

$$K_f'' = f''(K_t, N) \text{ independent of } \overline{\sigma} \tag{3.9}$$

These three equations imply that, at a certain K_t and N, the K_f, K_f', and K_f'' factors are fixed, i.e., that an N-curve for the notched material, with a certain K_t value from the same N-curve of the unnotched material, is to be construed as one point of the first fixed N-curve. This is seen from figure 3.4(a), (b), and (c). These three figures are correlated in figure 3.4(d), whereby it should be remembered that $K_f = K_f' = K_f''$ at $\overline{\sigma} = 0 (R = -1)$. According to figure 3.4(d), only one of the three equations (3.7), (3.8), and (3.9) can be correct. That equation 3.9 is not possible, is readily apparent.

The N-curves on the notched material converge near the point of the $\overline{\sigma}$-axis where $\sigma = (\sigma_b)_{\text{notched material}}$. This σ_b is, in general, only a little less than the σ_b of the unnotched material and from that point of view, equation (3.8) merits preference. However, the question is whether a safe approximation is obtained in the particular range of the fatigue diagram.

Table 3.1 gives some test data taken from references 10 to 13. The potential scatter, mentioned earlier, is readily apparent from the table. For this reason the table offers little support to the verification of equation (3.8), although the figures indicate that these relations may be useful in practice. But general acceptance should be withheld pending more extensive experiments.

When equation (3.8) is applicable, one fatigue curve and the σ_b value of the notched specimen are sufficient to construct the complete fatigue diagram of the notched specimen from that of the unnotched material.

For the K_f-K_t relation it is still assumed that the fatigue process in the notched structure is comparable with that in the unnotched specimen. There are cases where this is so; for instance, on joints where clearance (play) exists and σ_{max} and σ_{min} have a different sign. This, in turn, may induce stresses and frictional corrosion, a striking example of which is given in reference 36. Lugs with different clearance (tolerance) are stressed in pure alternating load. The smaller the tolerance the greater the fatigue strength. But photoelastically (ref. 8) it was found that K_t is little dependent on tolerance (clearance). In such cases a K_t-K_f relation has little significance.

3.3. Fatigue Diagram of Unnotched Specimen

For the calculation of K_f the fatigue data of the unnotched specimen are necessary. Fatigue curves have been defined in various laboratories. At mutual comparison the differences in fatigue tests are sometimes not particularly great, but still too great to make a definition of the K_t-K_f-N relation possible. It calls for a test program in which a sufficient number of specimens for some fatigue curves is available, while a guarantee regarding the uniformity of the material of the different specimens is necessary. Such an investigation into the K_t-K_f-N relation is time-consuming, to be sure, but it also will prove its worth when a theoretical treatment of the problem has become possible.

4. FATIGUE STRENGTH OF RIVETED JOINTS

The present report is limited to lap joints. Much of which is applicable to lap joints is directly applicable to single-shear joints, which may be regarded as a connection of two lap joints in series. The double-shear joint is superior as far as fatigue is concerned. There is no eccentric load of the rivet and the stress concentration in the sheet is therefore much smaller. The fatigue on such joints does not become critical so quickly. (CF. fig. 4.1.) However, such joints are less used in airplane designs than lap joints.

The literature published up to 1950 is discussed in reference 25, report S.381, section 4. A number of conclusions are recapitulated and

supplemented by data published since. It should be noted that the literature on the fatigue strength of joints is not very extensive.

4.1. Types of Failure

These can be divided in two groups:

(1) Sheet failure

(2) Rivet failure

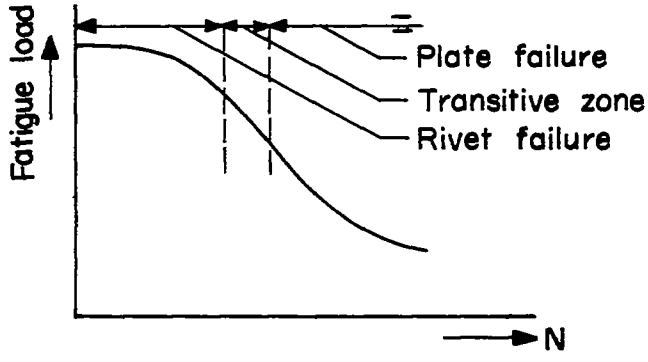

Statically, it is the rivet that fails generally, while at long fatigue life the sheet almost always fails. At short fatigue life, rivet failure also occurs often. Rivet failure is usually accompanied by shearing of the rivet, but breaking away of a countersunk rivet head or breaking off a closing head does happen too.

Under high stresses the rivet hole is deformed and as a result the loads on the rivet are more locally applied. This also holds for the walls of the hole, but owing to the great amount of material, the possibility to deform is much greater so that it should not be surprising that the stress in the rivet becomes more critical with increasing load.

Rivet failure is defined by the load per rivet, and various factors, such as $\left(\frac{d}{s}\right)$, number of rivet rows, rivet pattern, have little or no effect on it; but type of rivet, riveting method, and rivet material are of greater importance.

On the other hand, rivet material has little effect at sheet failure.

In general a load, slightly below the breaking load, can be sustained from 10^3 to 10^4 times. Therefore, in connection with the known

load spectrums, the greatest attention should be given to the lower loads. These loads are not dangerous because of their size but of their possible repetition.

4.2. Effect of Rivet Diameter to Pitch Ratio $\left(\frac{d}{s}\right)$

As explained in 3.2, a small variation of $\frac{d}{s}$ has little effect on K_f. The harder the material, the greater the effect on K_f. (By hard material is meant a material of high $\sigma_{0.2}/\sigma_b$ ratio and low permanent ductility δ.) It is advisable therefore to keep $\frac{d}{s}$ as great as possible when hard material is involved.

The $\frac{d}{s}$ ratio is usually defined on the basis of static calculations; d is often defined by the sheet thickness and great variations in $\frac{d}{s}$ do not occur in practice. A $\frac{d}{s} = \frac{1}{4}$ to $\frac{1}{6}$ is normal in airplane construction.

Bürnheim (ref. 5) made some tests at great variation of $\frac{d}{s}$ and found the effect to be considerable. At $s = 15$ mm, $t = 1.5$ mm (sheet thickness) and $\frac{d}{s}$ varying from 0.17 to 0.47 the fatigue limit of a dural lap joint at $R = 0$ rose from 2.3 to 5.4 kg/mm^2. Unfortunately Bürnheim did not say how this increase varied as function of rivet diameter nor from how many tests these results were determined.

At $\frac{d}{s} = 0.47$ the plate cross section is practically halved and such a ratio is utterly unacceptable on static considerations.

4.3. Effect of Sheet Thickness

This effect cannot be examined independent of all other variables. A thick sheet is used only when a considerable force per unit length is to be transferred by the joint. Then greater rivets and several rivet rows are applied, in general.

When the ratio $\sigma_{sheet}/\tau_{rivet}$ for a certain number of rivet rows is kept constant, τ is proportional to d^2 in first approximation. A slight change in thickness makes then yet a smaller change in rivet diameter necessary. Since a slight change in $\frac{d}{s}$ has little effect,

the influence of a slight change in thickness can still be figured for constant dimensions.

From report M.1943 (ref. 17) it seems than an 0.8- to 1.6-mm change in thickness has little effect. Greater thickness is less favorable at short fatigue life, because the type of failure changes. As the rivet head snaps off the sheet is no longer in a critical state. An 0.6- to 1.5-mm variation in t revealed no change in fatigue strength, according to Bürnheim (ref. 5).

4.4. Effect of the Number of Rivet Rows

The effect of the number of rivet rows is not to be regarded as free from the influence of sheet thickness. It increases when the load becomes higher, but a thicker sheet is then also required. When all rows have the same number of rivets per row (same pitch), not every row supports the same load in the elastic range. The outside row carries the most. When deformation occurs, the load transfer distribution over the different rows becomes still more uniform.

On a single-row joint the sheet bends near the rivet. On multirow joints this bending is less and that is favorable. One unfavorable factor is, however, that not all rivets carry the same load. Besides, on a multirow joint there occur not only stress concentrations around the rivet holes, as a result of which the rivets transfer a part of the load from one sheet to the other, but also because the sheet must transmit the rest of the load to the following rivet rows. For this reason the stress concentration is greatest in the outside rows.

Table 4.1 gives the results obtained on lap joints with 1, 2, and 3 rivet rows, all having the same number of rivets per row and the same sheet thickness, taken from reference 29. It actually seems that the fatigue strength per rivet decreases with increasing number of rivet rows. However, the same holds true also for the static strength per rivet. Statically, the rivets yielded in shear, in fatigue the sheet was critical. When with increasing number of rivet rows the sheet thickness itself was increased in proportion, the static strength did not improve, although it raised the fatigue strength per rivet. This is readily apparent from the tests in report M.1943 (ref. 17). For equal constant number of rivet rows (i.e., 2) and increasing thickness, the fatigue strength per mm^2 remained practically constant, so that the fatigue strength per rivet rose proportionally to the sheet thickness. The static load at failure, however, appeared to be practically independent of the sheet thickness. Increasing the fatigue strength per rivet by increasing the sheet thickness is possible only as long as the sheet, not the rivet, is critical. In general, it may be stated that, when statically, the rivet is critical and in fatigue the sheet is critical,

the fatigue strength will become relatively better by increasing the number of rivet rows if, at the same time, the number of rivet rows is adjusted to the sheet thickness.

4.5. Effect of Rivet Pattern

Not all rivet rows of multirow joints carry the same load. The outside rows carry the most. A more uniform load distribution over all rivets is obtained by increasing the pitch on the outside rows, as is seen when comparing the tests of references 29 and 17. From table 4.1 (ref. 29) it follows that for equal sheet thickness and equal number of rivets per row (hence the same pitch), the fatigue strength per rivet of the three-row joint is lower than that of the two-row joint. The following two patterns are compared in reference 17.

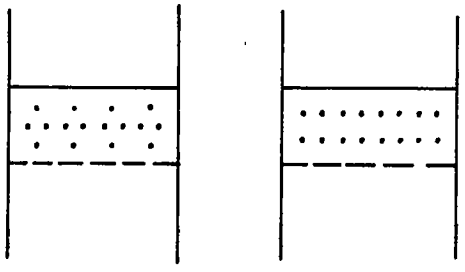

Both lap joints have the same number of rivets.

However, both have the same fatigue strength per rivet here.

Joints with more than two rivet rows should be so proportioned that all rivets carry equal load. In the plastic range (i.e., as soon as permanent deformations have occurred) the rivet load is more uniform. But, with respect to fatigue, it is recommended to so design the rivet pattern that all rivets carry the same load as much as possible at low load too.

When a two-row lap joint is involved one can scarcely speak of a rivet pattern. The following two types are possible:

(1) Zigzag riveting

(2) Chain riveting

As conclusion of report M.1857 (ref. 15) it is noticed that there is no difference worth mentioning between both patterns. This is the conclusion of reference 28 too.

4.6. Effect of Bending Stiffness on Lap Joint

Considerable bending appears on the single lap joint, as a result of which the stress concentration around the rivet hole becomes more critical. By giving this lap joint more bending stiffness, the fatigue properties are improved.

Reference 29 contains, among others, a comparison of a lap joint, a single-shear joint, and a double-shear joint. The results are reproduced in figure 4.1. The very thick strip on the single-shear joint prevents the rivet from bending, hence affords a substantial improvement in the fatigue characteristics.

In airplane construction a riveted joint is, in general, supported against another structural component, for example, ribs. This has a favorable effect on the fatigue strength, but its magnitude is difficult to define from laboratory tests.

On two or more rivet rows the bending in the sheet is so much less as the spacing of the two outside rivet rows is greater. In reference 28 the spacing of the two rows of a double-row joint is shown varied. It is obvious that increasing the spacing improves the fatigue characteristics. See figure 4.2.

4.7. Effect of Head Style of Rivets

On this subject the NLL has carried out a series of experiments. A conclusion of report M.1857 (ref. 15) sets forth that the types of rivets - round head rivet, countersunk rivet with drilled hole, and countersunk rivet with dimpled plate - give about the same results.

From report M.1943 (ref. 17) it seems that there is little difference between round head, flush, and NACA rivet cited in that report. For short fatigue life, the NACA flush rivet is somewhat better, especially on thicker sheet. For the short fatigue lives the type of failure is different. The rivet head may shear off. On the NACA rivets this is less apt to occur. Obviously these rivets are stronger.

Reference 29 gives a comparison of different methods of sheet dimpling for flush rivets, i.e., "coin dimpling, conventional dimpling, spin dimpling, hot dimpling" and infers little difference in fatigue characteristics. All the same there seems to be some difference. It is surprising that statically, "spin dimpling" gives a lower strength, but at fatigue is surely just as good as the other methods. The specimens, dimpled for different operations, do not give the same results. In the face of the limited number of measurement the conclusions concerning the method of dimpling drawn from reference 29 are few.

Reference 20 also contains some comparisons made on a number of rivet patterns. Here also it is shown that spin dimpling is not as strong, statically, as other dimpling methods, whereas the static strength of flush rivets with drilled hole is lower than that of flush rivets with dimpled hole. At fatigue such differences disappear when the fatigue life is greater, although the impression still remains that "coin dimpling" gives better results than "spin dimpling."

The selection of rivet pattern and dimpling method based on other considerations is given in the following.

Dimpling of thick sheet is not advisable as it is susceptible to failure due to bending. On thin sheet, dimpling is preferable to drilling, not only because it is faster (ref. 3) but also because drilling leaves too little of the original hole wall, by which the bearing pressure becomes locally abnormal and the strength decreases. The boundary of the transition from dimpling to drilling lies at about 18 s.w.g. = 1.22 mm according to English literature. The fatigue crack on a lap joint with dimpled sheet often begins to show in the bent edge. For that reason the dimpling of thick sheet is not advisable.

Dimpling of thin, tough sheet such as 75 ST is also susceptible to cracking. Improvement is afforded here by spin dimpling or hot dimpling. Which of the two methods to recommend is hard to say. The difference in static strength favors "hot dimpling." Differences in fatigue characteristics are not plainly manifested in the literature. The writer in reference 1 claimed that "hot dimpling" presents difficulties in that the material sticks partly to the dimpling die. However, the heating in this case was carried out according to the spot welding system. Reference 3 gives a description of "hot dimpling" in which the heating was effected by internal heating of the die.

An advantage of "spin dimpling" over conventional dimpling it is claimed in reference 2 that rounding off is more severe, so that no groove originates between rivet-die head edge and sheet. The same applies to "hot dimpling." Bürnheim (ref. 5) stated that, when rivet head and countersunk hole do not have the same tip angle, it has a detrimental effect on the fatigue strength, to some extent.

The countersunk head on the NACA rivet is the closing head; this insures a good filling of the countersunk end of the hole. According to information obtained from the NACA, rivets with abnormally long countersunk head (which after driving is milled even with the plate) give the same favorable results as the NACA rivets. Complete filling of the hole is, of course, essential. It prevents end play and tension on the wall of the hole itself is beneficial. But Bürnheim (ref. 5) found that a 5-mm hole with a 4-mm rivet still is satisfactory, provided the rivet is soft enough.

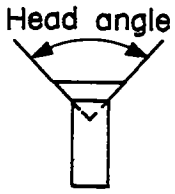

Snap-head and pop-head rivets are inferior by reason of the fact that the hole is not completely filled and the sheets are not as tightly pressed against one another. Mutual displacement of the sheets is apt to occur more easily and cause fretting corrosion.

In the U. S. the heads are usually countersunk at 100°, in England a at 120°. According to Burnheim (ref. 5), 120° should give the best results.

The effect of the rivet material is small. This is to be expected, since it is the sheet that yields at fatigue. The requirements of rivet material are adequate plasticity in the quenched state and suitable hardness at room temperature.

4.8. Effect of Type of Material

Only 24 ST and 75 ST aluminum alloys are considered. Nonclad 75 ST is more notch sensitive than 24 ST, as seen from table 3.1; reference 30 arrived at the same conclusion. Thus the K_f-K_t relation of 75 ST lies above that of 24 ST. And for a certain K_t on 75 ST the $\frac{dK_f}{dK_t}$ value is greater than for 24 ST. The effect of the specified variables is more pronounced on the 75 ST specimens.

Sheet material is usually clad and on 24 ST alclad and 75 ST alclad the differences in fatigue characteristics are less evident. Several investigators compared the two materials in the following manner: A notched specimen or joint of identical dimensions were made of each type of material, and the fatigue lives at specified stresses compared. The writer in reference 29 found longer fatigue life on 24 ST alclad lap joints than on 75 ST alclad. (Cf. table 4.1.) Reference 23 also made a comparison on different types of joints. The joints in 24 St alclad have, in general, longer fatigue life but less static strength. At equal static strength the fatigue life of joints in 24 ST alclad is higher, but these joints have a heavier weight.

The results of reference 14 are, to some extent, unlike the tests cited above. Under low stresses the fatigue life on notched specimens

of 75 ST alclad was found to be higher than on 24 ST alclad. Admittedly, the differences are not great, so that it may usually be assumed that the differences in fatigue strength on joints of 24 ST and 75 ST are not great unless the fatigue lives are abnormally short.

4.9. Other Variables

A few brief remarks about other factors which may be of influence, although considered less essential.

The distance of the outside rivet row from sheet edge seems to have little effect on the fatigue strength.

Rivet holes are usually drilled. But Bürnheim claims that machine-punched holes give just as good results as machine-drilled holes. According to him, strengthening the wall of the hole by forcing a large diameter through the hole improves the fatigue characteristics. But this involves extra tooling on the hole.

The direction of rolling of the sheet material has little influence, although the type of riveting machine has. This probably is related with the degree to which the hole is filled.

According to Bürnheim (ref. 5) the height of the closing head has no effect on the fatigue strength, but it does have on the static strength. If the closing head is too thin, it is sheared off.

5. FATIGUE STRENGTH OF LUGS

Publications on the fatigue of lugs are very few. The investigators used different materials, and a quantitative comparison of the NLL tests with those of others is therefore impossible. The results of the most important tests are discussed hereinafter.

5.1. Tests With Lugs

The discussed tests deal with the lug edge and leave the fork outside of consideration. The two edges of the fork together have, in general, greater thickness than the lip of the lug, by which the latter is loaded more heavily and fails. By pin is generally meant a bolt.

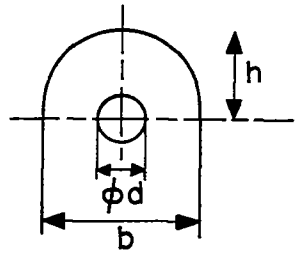

One important publication is that by Bürnheim (ref. 4). He investigated a great number of different specimen shapes. He used nonclad duralumin (aircraft material 3125.5) of 6-mm thickness, and steel bolts of 24-mm diameter, thus practically preventing the bolt from bending.

This investigation included three different b/d ratios

$$b/d = 1.5, \quad b/d = 2, \quad b/d = 3$$

From statical considerations $b/d = 1.5$ is definitely unacceptable.

Table 5.1 gives K_f' values computed from the fatigue curves. For some fatigue curves only seven to nine specimens were used, and there is some scatter, so that no extreme accuracy can be ascribed, a priori, to the K_f values.

But some conclusions can, indeed, be drawn:

(1) K_f is dependent on N, as already mentioned in section 3.2.

(2) In the explored range d/b is the controlling factor that defines K_f.

(3) The K_f values of specimen type I are abnormally low.

(4) Disregarding the specimen type I measurements, it seems that an increase in h signifies an improvement in fatigue strength.

(5) The effect of the ratio d/b is obvious also from K_t.

(6) The effect of ratio h/b likewise is evident from K_t, but K_f varies much more than K_t. In consequence the effect of d/b and h/b combined is not evident from K_t, as compared, for example, at types G and K with Q; G and K, both with a lower K_t than Q, have lower K_f' values than Q. This may be the result of scattering

in the measurements. But this might also be the result of an erroneously assumed K_t. For K_t is taken from a diagram by Frocht (ref. 8), which actually is valid for rectangular bars only. (See fig. 3.1.) On top of that the graph does not appear to be exactly correct.

(7) Bürnheim claims $\sigma_{0.2} = 30.5$ kg/mm^2 for the employed material. Again leaving specimen type I out of the consideration, the product at $N = 10^6$ and $N = 10^7$ is $K_t\sigma_{max} < 23$ kg/mm^2 on all specimen types and for $N = 10^5$ and $N = 3.10^4$ the result is $K_t\sigma_{max} < 27.5$ kg/mm^2. If the yield point lies between both stresses, which in view of $\sigma_{0.2}$ is not improbable, then at $N \geq 10^6$ all stresses are elastic and the peak stress at $N \leq 10^5$ lies in the platic range. For $N \geq 10^6$ it may be observed that $K_t \approx K_f$; and for $N \leq 10^5$, $K_f < K_t$.

From table 5.1 it is apparent that this is approximately complied with except on specimen types P and Q, i.e., the specimens with particularly great height of head. This raises the impression that great head height on lugs has a lower K_t value than indicated by Frocht on rectangular bars, as in figure 3.1.

Wållgren (ref. 34) tested five specimen types on CrMo-steel ($\sigma_b = 90$ kg/mm^2) and 24 ST extrusions. The bolt was also of CrMo-steel. These tests are of interest since they included the deformation of the hole. They were measured at hole center and hole wall. They disclosed considerable differences at small d/t ratio. Table 5.2 represents the most important part of the measurements. As regards the measuring accuracy it can only be guessed. But the following inference can be made:

(1) There are appreciable differences in deformation at the wall and the center of the hole, with the wall being deformed most.

(2) These differences are plainly visible on the thicker sheet. (The bolt diameter was constant.)

Here it is apparent that bending of the bolt actually occurs and that the d/t ratio does play a part.

Table 5.3 contains a number of effective stress concentration factors (K_f) for long fatigue life. They still seem to be all except a few considerably greater than the K_t values and the explanation will undoubtedly be found in the bending of the bolt. The accuracy of K_f

in this table is not great for the previously cited reasons. It is readily apparent that, as was to be expected, the bending of a bolt in a thick sheet (type 4) is more effective than in a thin sheet (type 5).

Petrelius (ref. 27) investigated three light metal castings of silicon-aluminum, aluminum-magnesium, and a zirconium-magnesium on three types of specimens each, with sheet thickness of $t = 9$ mm and bolt diameter $d = 5$ mm, in all tests. The width b was varied, and the K_t values were 3.3 - 3.8 - 4.6. At a specific N the specimens with a higher K_t produced an equal or higher K_f. The discrepancies were small, as a rule.

In the NLL tests (ref. 16) the bolt diameter was kept constant. Width b and sheet thickness t (see sketch in table 5.4) were varied so that the surface of the smallest cross section remained the same. By this method b/d (hence K_t according to Frocht) and sheet thickness were varied simultaneously, so that the effect of each one separately was difficult to ascertain from the tests.

Table 5.4 gives the dimensions of the specimen types with the K_t values according to Frocht. It is seen that a specimen with high K_t has a small sheet thickness and that with small K_t a greater sheet thickness. Considering the effect of sheet thickness on the basis of the previously described tests, it is evident that all specimen types have approximately identical fatigue curves.

It is readily apparent from the foregoing that bending of the bolt has an unfavorable effect on the K_t values. The peak stress is higher at the sheet surface than in sheet center. Thus the question is justified as to whether a layer of plating could possibly play an unfavorable part. Lugs are usually unplated so the problem does not enter. But when the fittings are small they are sometimes plated. It should certainly be interesting to make a pin joint, in which the bolt deflection is considerable, of plated and unplated metal, and then compare the fatigue characteristics.

The bolt deflection is to be limited by choosing a large bolt diameter b, with bolt material as rigid as possible (usually steel) and sheet thickness small; a low b/d is favorable too. The cited recommendations come in conflict with each other and with static strength requirements.

At a constant full cross section (bt) and a certain d, a small t (favorable) gives a high b, and hence a small d/b (unfavorable). At a certain b and t a great d (favorable) gives a small d/b (favorable), but a great reduction of the critical cross section with respect to the full cross section (statically unfavorable).

These difficulties can be avoided to some extent by giving the eye of the lug the shape shown in the sketch. The critical cross section does not have to be small, d can be great and d/b too.

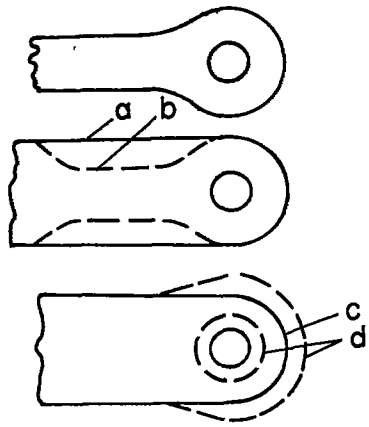

Bürnheim (ref. 4) had made some tests with lugs having eyes of this kind. On comparing eye a and b, it is found that there is almost no difference in fatigue strength, as will be shown later. But when comparing specimen types c and d (as sketched), the results with d are found to be definitely more favorable. If type c does not give sufficient fatigue strength, type d is a possible improvement of it, the weight increase remaining limited. One drawback of type d is the higher manufacturing cost involved.

5.2. Some Possibilities of Raising the Fatigue Strength of Lugs

5.2.1. The use of interference fits.- The use of interference fits was investigated by Fisher (ref. 6), and also by the NLL (ref. 18).

Fisher found that below a certain critical value of interference (= negative clearance space) of the bolt, the amount of interference has no effect on fatigue life, and that above the critical interference the fatigue strength is improved. All of Fisher's tests were made at one stress level. In the NLL tests a complete fatigue curve (R = 0) was obtained for four different fits, i.e., great positive clearance, little clearance, low interference, and high interference. They confirm that for high interference of the bolt the fatigue life is lengthened and the fatigue limit is increased. Fisher thinks that this improvement is possibly due to fact that the so-called "fretting corrosion" is much less possible, and that the preloading as a result of the bolt being clamped in the hole, reduces the stress intensity rather than the highest stress concentration.

The drawback of this method when fitting a joint is explained by Fisher in a roundabout way to the effect that the hole is fitted with a bushing which is pushed in with high interference, while the bolt passes through the bushing with a sliding fit. This seems to give the same result.

Fisher did not define the effect on the static strength. The NLL tests disclosed no effect on the breaking strength, while the effect on $\sigma_{0.1}$ is hardly worth mentioning. It was a little less on lugs with interference fit. Figure 5.1 gives an illustration of the improvement obtained in the NLL tests.

As previously stated, the tolerance between bolt and hole under alternating load at $R < 0$ (i.e., $\sigma_{max} > 0$ and $\sigma_{min} < 0$) is very seriously affected by the appearance of shocks and the concomitant fretting corrosion. Wållgren (ref. 36) confirmed this very clearly with his tests.

5.2.2. Strengthening the Wall of the Hole.- One method closely associated with the foregoing consists of strengthening the wall of a hole. This was investigated by Bürnheim (ref. 4). With a slightly tapered steel bolt the undersized hole (d = 23 mm) was enlarged to size (d = 24 mm). It actually resulted in improvement, as shown in figure 5.2.

5.2.3. Tight clamping of Bolt.- Another method of improving the fatigue strength, also studied by Fisher (ref. 7), consists in the tight clamping of the bolt. In this manner the fork which fits around the lip is tightly pressed against the lip of the lug, and part of the load is transmitted as frictional force instead of through the bolt. The type of specimen and the results are reproduced in figure 5.3. The effect seems to be appreciable. The type of failure is also modified by such tight clamping, i.e., the failure, starting at the hole in failure at the rim of the washer. Fisher means that fretting corrosion at this spot is not ruled out.

Tight clamping is so much more effective as the sheet is thinner. However, the frictional force is little dependent on sheet thickness and is therefore relatively great on a thin sheet that transmits less force.

5.2.4. Other methods.- The methods enumerated for improving the fatigue characteristics make the joint more expensive. A still further step is the use of several bolts consecutively and the application of varying thickness. A study on this subject, although not very complete, is described in reference 19.

A calculation of the fatigue characteristics on such joints may be regarded as being rather impossible at the present time.

6. CONCLUSIONS

(1) Of a load spectrum which is principally controlled by gusts, it is the medium and low stresses that are dangerous, not because of their size but their frequency of occurrence.

(2) For a "cumulative damage" calculation only a certain part of the fatigue diagram is of interest. The part of the high mean stress is not important.

(3) As a rule it is recommended to define a fatigue diagram from fatigue curves at constant mean stress.

(4) There is no reason for assuming that the lines of a fatigue diagram vary according to a simple functional relationship.

(5) When no definite relationship exist between the theoretical and the effective stress concentration factor, then the fatigue diagram for notched material can be defined from the fatigue diagram of the unnotched material, if the theoretical stress concentration factor of the notched material is known.

(6) The theoretical stress concentration factor of riveted lap joints with a single-shear-loaded rivets is unknown. But it can be shown that this factor is very high.

(7) In lugs in which the bolt is loaded in double shear, the theoretical stress concentration factor is approximately known, provided certain conditions are complied with. The most important of these is that the bolt be rigid enough so that bending can be discounted. The fit of the bolt itself has scarcely any effect on the stress concentration factor then, provided the interference of the bolt is not too great.

(8) The relationship between stress concentration factor K_t and K_f is such that at high K_t value a certain change of K_t produces a smaller change in K_f. Many geometric variables which might affect K_t on riveted lap joints have therefore little effect on the fatigue strength.

(9) It is possible that specimens with different notch patterns but identical K_t have the same fatigue diagram. A theoretical and experimental investigation of it is desirable.

(10) The derivation of the fatigue diagram for notched material from that for unnotched material is conceivable by several simple methods. An experimental check is difficult by reason of the wide scattering accompanying fatigue tests and which is increasingly evident on the effective stress concentration factor. A great number of tests is required.

(11) The relationship of K_t and K_f seems to be dependent on the fatigue life N.

(12) In a static calculation of a riveted lap joint, it is advisable, from the fatigue standpoint, to keep the d/s ratio as high as possible, although the effect of this ratio is not great.

(13) A slight change in sheet thickness has no effect on fatigue strength.

(14) At increasing number of rivet rows and simultaneously increasing sheet thickness on riveted lap joints the fatigue is less critical.

(15) It is recommended to design the pattern of a multirow lap joint in such a way that all rivets carry identical loads even under low load. Under high loads, as soon as deformations occur, the stress is evenly distributed over the rivets themselves more or less.

(16) There is no difference in the fatigue strength of double-row lap joints whether chain- or zigzag-riveted.

(17) When the bending stiffness of lap joint is increased such as when the lap joint is riveted to a structural component, for example, the fatigue strength is improved. The extent of such improvement can be ascertained from laboratory tests.

(18) The flush rivet with drilled hole, the flush rivet with dimpled hole, the spherical-head rivet, and the NACA rivet give about the same fatigue results, provided the riveting is satisfactory. Still, the NACA rivet is superior and the flush rivet with drilled hole worse if the sheet is thin. It is important that the rivet hole be completely filled and the sheets be properly pressed against each other.

(19) On flush rivets with dimpled sheet the dimpling mode is important for the smoothness of surface. Spin dimpling and hot dimpling give better results than dimpling with fixed die or the rivet itself. In fatigue the cited methods reveal no appreciable difference in fatigue strength, unless the dimpled sheet is excessively thick.

(20) Nonplated, the 75 ST material is more notch sensitive than 24 ST. On plated material the difference is less evident, although a given joint in 24 ST alclad in fatigue probably is stronger still than in 75 ST alclad.

(21) From the standpoint of fatigue, pin joints are improved by the use of:

1. A high d/s ratio

2. The stiffest possible bolt material

3. The greatest possible bolt diameter

4. The thinnest possible sheet

The first recommendation is associated with the normal stress concentration taking place around hole, the others with the stress concentration that occurs as result of deflection of the bolt. The recommendations lead to a lug eye with a greatly reduced critical cross section. This can be avoided by making the eye larger than the bolt.

(22) Some of the methods for improving the fatigue strength of pin joints are:

1. Use of bolt with a strong interference fit in the hole

2. Strengthening of hole walls

3. Tight clamping of bolt, so that the fork is pressed tightly on both sides

The installation difficulties of the first method are avoided by first inserting a (steel) bolt with great interference fit in the lip, while the bolt passes through the bushing with a sliding fit.

The third method is the most effective on thin lugs.

7. CLOSING REMARKS AND SUGGESTIONS FOR FUTURE INVESTIGATIONS

The conclusions of the present report are not sharply outlined in all cases. The theoretical background of fatigue is disregarded in this article. So also is the theoretical consideration of the notch effect. But an attempt is made to ascertain the extent to which a relation between K_t and K_f can be calculated and what is necessary for the

use of such a relation. The outcome is not encouraging. The manipulation of such a relation is rendered difficult, first, by the marked scatter customary in fatigue. Furthermore, it was found that, besides K_t, some other variables define K_f, i.e., the type of material and N. Perhaps the shape of the notch does not need to be regarded as variable.

A K_t-K_f relation, with possibly other variables, should be very attractive for defining the fatigue diagram of notched material from that of unnotched material. For the time being this relation cannot be defined theoretically. But practice may have recourse to an experimental determination. Again it is pointed out that many tests are required to define it.

The most likely points involved in a detailed study are:

1. Is K_f dependent upon the shape of the notch at equal K_t? This involves the investigation of different shapes of notches. If they have the same K_f, that will be an important gain. This problem lends itself perhaps to a qualitative theoretical examination also.

2. The determination of the K_t-K_f relation, with possibly other variables. The determination of fatigue diagrams of specimens with different K_t values is then necessary. Each fatigue diagram is defined by a number of fatigue curves. For each fatigue curve an estimated number of at least 20 specimens are necessary.

Since the K_t-K_f relation is in every case dependent upon the kind of material, the determination of the relation is more logical, because a material can be selected that has or will receive an extensive range of application. For such a test program definite assurance regarding uniformity of material is essential.

As a more direct practical suggestion and supplemental to the NLL tests the definition of fatigue diagrams of riveted joints is presented. Since a limitation is necessary, a representative rivet pattern was chosen. In view of the tests already completed, a double-row lap joint was indicated. The tests in references 15 and 17 are restricted to $R = 0$. It was advisable to make the fatigue diagram more complete in a manner as discussed in section 2.

According to the conclusions, the rivet pattern is of less significance; although it is recommended for the investigation of the rivet type and especially also the riveting procedure. Some effect may be exerted by the dimpling method, by possible redrilling of a dimpled hole, or the number of blows by which the closing head is formed, the top angle

of the countersunk rivet, etc. Such a comparison does not require complete fatigue curves. It is sufficient to make a number of tests at a normal $\bar{\sigma}$ and a $\bar{\sigma}_w$ which then gives a fatigue life of, say 10^5 to 10^6 cycles, for example. It is inconceivable that it will appear that the quality of the rivet should be increased.

The lugs have no high K_t values and a variation of K_t should therefore be better noticeable. On such joints it is important to have a number of fatigue diagrams of different K_t values available. Up to now the NLL tests were confined to loads with $R \approx 0$ and to aircraft material 3115.4. These tests should be continued with 24 ST or 75 ST on specimens at some different K_t values. According to 3.1 and 5.1, the sheet should be of thin and constant thickness. Aside from that it is advisable to subject the effect of sheet thickness on bolt deflection as well as the effect of an existant or nonexistant layer of plating to a thorough investigation.

Here also the comparison may be confined to one definite $\bar{\sigma}$ and σ_w.

In an investigation of the K_t-K_f relationship, the lugs may be selected as specimen type. However, this is a combination of ad hoc research and basic research, which usually is accompanied by difficulties. Indeed, for the study of specific influence factors it is, as a rule, desirable to vary these factors very considerably, a variation which does not occur in practice. These difficulties exist on the K_t-K_f relation; hence it is desirable to extend the study to include tests on specimens with a very high and a very low K_t value not used in actual practice.

Translated by J. Vanier
National Advisory Committee
for Aeronautics

REFERENCES

1. Spin Dimpling. Aircraft Production, vol. 13, 1951, pp. 3-7.

2. Spin Dimpling. Aircraft Production, vol. 15, 1953, pp. 314-317.

3. Hot Dimpling Widens Metal Use. Aviation Week, vol. 54, 1951, p. 21.

4. Bürnheim, H.: Die Dauerhaltbarkeit von Stabköpfen aus einer hochfesten Al-Cu-Mg Legierung. Aluminium Bd. 23, 1941, pp. 208-213.

5. Bürnheim, H.: Neuere Erkenntnisse zur Dauerhaltbarkeit der Nietverbindungen von Blechen aus Leichtmetallen. Aluminium, Bd. 28, 1952, pp. 140-143 and pp. 222-229.

6. Fisher, W. A. P.: Improvements in the Fatigue Strength of Joints by the Use of Interference Fits. Rep. No. Structures 127, British R. A. E., 1952.

7. Fisher, W. A. P.: The Effect of Tight Clamping on the Fatigue Strength of Joints. Rep. No. Structures 121, British R. A. E., 1952.

8. Frocht, M. M.: Photoelasticity, vol. II, John Wiley & Sons, Inc., 1948.

9. Giddings, H.: Aircraft Riveting. Journal of the Royal Aeronautical Society, vol. 54, pp. 753-778, 1950.

10. Grover, H. J., Bishop, S. M., and Jackson, L. R.: Fatigue Strengths of Aircraft Materials. Axial-Load Fatigue Tests on Unnotched Sheet Specimens of 24S-T3 and 75S-T6 Aluminum Alloys and of SAE 4130 Steel. NACA TN 2324, 1951.

11. Grover, H. J., Bishop, S. M., and Jackson, L. R.: Fatigue Strengths of Aircraft Materials. Axial-Load Fatigue Tests on Notched Sheet Specimens of 24S-T3 and 75S-T6 Aluminum Alloys and of SAE 4130 Steel With Stress-Concentration Factors of 2.0 and 4.0. NACA TN 2389, 1951.

12. Grover, H. J., Bishop, S. M., and Jackson, L. R.: Fatigue Strengths of Aircraft Materials. Axial-Load Fatigue Tests on Notched Sheet Specimens of 24S-T3 and 75S-T6 Aluminum Alloys and of SAE 4130 Steel With Stress-Concentration Factor of 5.0. NACA TN 2390, 1951.

13. Grover, H. J., Hyler, W. S., and Jackson, L. R.: Fatigue Strength of Aircraft Materials. Axial-Load Fatigue Tests on Notched Sheet Specimens of 24S-T3 and 75S-T6 Aluminum Alloys and of SAE 4130 Steel With Stress-Concentration Factor of 1.5. NACA TN 2639, 1952.

14. Hartman, A.: Onderzoek naar de kerfgevoeligheid van geplateerd 24 ST en 75 ST bij pulserende sprongbelasting op trek. N.L.L. Rapport M.1819, 1952.

15. Hartman and Duyn, G. C.: A Comparative Investigation on the Fatigue Strength at Fluctuating Tension of Several Types of Riveted Lap Joints. 4 Series of Bolted and Some Series of Glued Lap Joints of 24 ST Alclad. N.L.L. Report M. 1857, 1952.

16. Hartman, A.: Comparative Investigation at Fluctuating Tension (R=0) on Dural Lugs of Different Design. N.L.L. Report M. 1932, 1953.

17. Hartman, A.: A Comparative Investigation on the Influence of Sheet-Thickness, Type of Rivet and Number of Rivet-Rows on the Fatigue Strength at Fluctuating Tension of Riveted-Single Lap Joints of 24 ST Alclad Sheet and 17 S Rivets. Report M. 1943, 1954.

18. Hartman, A., and Jacobs, F. A.: The Effect of the Interference Fit on the Fatigue Strength of Pin-Hole Joints. N.L.L. Report M. 1946, 1954.

19. Hartmann, E. C., Holt, M., and Eaton, I. D.: Static and Fatigue Strengths of High-Strength Aluminum-Alloy Bolted Joints. NACA TN 2276, 1951.

20. Holt, M.: Results of Shear Fatigue Tests of Joints With $\frac{3}{16}$-Inch-Diameter 24S-T31 Rivets in 0.064-Inch-Thick Alclad Sheet. NACA TN 2012, 1950.

21. Jackson, L. R., and Grover, H. J.: The Application of Data on Strength Under Repeated Stresses to the Design of Aircraft. NACA ARR 5H27, 1945.

22. Lipson, C., Noll, G. C., and Clock, L. S.: Stress and Strength of Manufactured Parts. McGraw-Hill Book Company, Inc., New York, 1950.

23. Lundberg, B. K. O., and Wållgren, G. G. E.: A Study of Some Factors Affecting the Fatigue Life of Aircraft Parts With Application to Structural Elements of 24 ST and 75 ST Aluminum Alloys. FFA Report Nr. 30, 1949.

24. Manual on Fatigue Testing. Prepared by Committee E-9 on Fatigue. American Society for Testing Materials, Special Technical Publication, No. 91, 1949.

25. Meer, H. P. v., and Plantema, F. J.: Vermoeiing van constructies en constructiedelen. N.L.L. Rapport S.357, 1949.

26. Meer, H. P. v., and Hartman, A.,: Literatuurgegevens over de vermoeiingssterkte van lichte metalen. N.L.L. Rapport S.381, 1951.

27. Petrelius, S. E.: Static Tests and Fatigue Tests With Lugs of the Light Metal Castings Silicon-Aluminium, Aluminium-Magnesium and Zirconium-Magnesium. (In Swedish with English summary.) FFA Rapport HU-329.

28. Russell, H. W., Jackson, L. R., Grover, H. J., and Beaver, W. W.: Fatigue Strength and Related Characteristics of Aircraft Joints. I - Comparison of Spot-Weld and Rivet Patterns in 24S-T Alclad Sheet-Comparison of 24S-T Alclad and 75S-T Alclad. NACA ARR 4F01, 1944.

29. Russell, H. W., Jackson, L. R., Grover, H. J., and Beaver, W. W.: Fatigue Strength and Related Characteristics of Aircraft Joints. II - Fatigue Characteristics of Sheet and Riveted Joints of 0.040-Inch 24S-T, 75S-T, and R303-T275 Aluminum Alloys. NACA TN 1485, 1948.

30. Taub, J.: Toepassing van het 75 ST materiaal in verkeersvliegtuigen. KIM Rapport T.W.615, 1949.

31. Taylor, J.: Measurements of Gust Loads in Aircraft. Journal of the Royal Aeronautical Society, vol. 57, 1953, p. 78.

32. Walker, P. B.: Design Criterion for Fatigue of Wings. Journal of the Royal Aeronautical Society, vol. 57, 1953, p. 12.

33. Wållgren, G.: Fatigue Tests With Stress Cycles of Varying Amplitude. FFA Report Nr. 28, 1949.

34. Wållgren, G.: Static and Fatigue Tests With Lugs of Steel and Dural. FFA Report HU 281-1951. (In het Zweeds met Engelse summary.)

35. Wållgren, G.: Direct Fatigue Tests With Tensile and Compressive Mean Stresses on 24 ST Aluminium Plain Specimens and Specimens Notched by a Drilled Hole. FFA Report Nr.48, 1953.

36. Wållgren, G., and Alfredsson, S.: The Effect of Fatigue Loads on the Tolerance Between Bushes and Bolts. FFA Report HU-383, 1953. (In het Zweeds met Engelse summary.)

37. Wills, H. A.: The Life of Aircraft Structures. Second International Aeronautical Conference, New York, 1949, p. 361.

TABLE 3.1

EFFECTIVE STRESS CONCENTRATION FACTORS OF NOTCHED SPECIMENS OF

24 ST AND 75 ST (TAKEN FROM REFS. 10, 11, 12, AND 13)

Shape of specimen

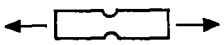

Material	N	K_t	$K_f = K_f' = K_f''$	K_f			K_f'			K_f''		
			R = -1	R = 0	R = 0.2	R = 0.5	$\bar{\sigma} = 10^4$ psi	$\bar{\sigma} = 2 \times 10^4$ psi	$\bar{\sigma} = 3 \times 10^4$ psi	$\bar{\sigma} = 10^4$ psi	$\bar{\sigma} = 2 \times 10^4$ psi	$\bar{\sigma} = 3 \times 10^4$ psi
24 ST3	10^4	1.5	1.3	1.2	1.1		1.4	1.4	1.4	1.3	1.2	1.2
		2	1.7	1.3	1.2		1.8	1.6	1.5	1.6	1.4	1.3
		4	2.8	2.4	2.2		3.3	3.8	3.6	2.4	2.0	1.7
		5	2.9	2.6	2.4		3.7	4.1	4.0	2.6	2.1	1.8
	10^5	1.5	1.3	1.5	1.3		1.3	1.3	1.3	1.2	1.2	1.1
		2	2.1	1.7	1.6		2.0	1.9	1.8	1.6	1.4	1.3
		4.0	3.4	3.4	3.4		5.2	5.2	4.8	2.6	1.8	1.5
		5	3.1	3.5	3.4		4.8	4.3	5.1	2.5	1.8	1.6
	10^6	1.5	1.4				1.3	1.5	1.3	1.2	1.2	1.1
		2					1.9	1.9	1.9	1.5	1.3	1.2
		4					4.1	4.8	4.2	2.0	1.6	1.4
		5					4.3	4.8	5.2	2.1	1.6	1.4
	10^7	1.5	1.3	1.3	1.4		1.4	1.5	1.5	1.2	1.2	1.1
		2	1.8	1.8	1.6		1.7	1.8	1.8	1.4	1.3	1.2
		4	3.2	3.0	3.1		3.8	4.5	4.0	1.9	1.6	1.4
		5	3.4	3.3	3.2		4.2	5.1	5.3	2.0	1.6	1.4
75 ST6	10^4	1.5	1.3	1.3	1.3		1.4	1.4	1.5	1.3	1.3	1.3
		2	1.7	1.6	1.4	1.3	1.9	1.9	2.0	1.6	1.5	1.4
		4	3.2	3.2	2.8	2.2	4.0	4.5	5.0	2.7	2.3	1.9
		5	3.3	3.8	3.3	2.5	4.7	5.9	5.3	3.0	2.5	1.9
	10^5	1.5	1.3	1.2	1.3		1.3	1.4	1.6	1.2	1.2	1.2
		2	1.8	1.6	1.7	1.8	1.8	2.1	2.5	1.5	1.4	1.4
		4	3.2	3.5	3.6	3.6	5.0	6.3	6.0	2.5	1.9	1.6
		5	3.5	3.9	4.0	3.9	6.0	6.8	6.0	2.7	1.9	1.6
	10^6	1.5	1.6				1.5	1.6	1.7	1.3	1.2	1.2
		2					1.9	2.3	2.2	1.5	1.4	1.3
		4					6.5	7.3	6.3	2.6	1.8	1.5
		5					6.5	8.4	5.4	2.6	1.9	1.5
	10^7	1.5	1.8	1.5	1.5		1.8	1.7	1.9	1.5	1.3	1.2
		2	1.9	1.6	1.7	1.8	1.9	2.2	2.2	1.5	1.4	1.3
		4	4.0	4.1	4.3	4.6	6.3	7.0	6.3	2.5	1.8	1.5
		5	5.0	4.5	4.5	4.7	7.1	8.4	5.8	2.6	1.8	1.5

TABLE 4.1

COMPARISON OF FATIGUE STRENGTH OF LAP JOINTS WITH ONE, TWO, AND THREE RIVET ROWS, ACCORDING TO SKETCH BELOW (TAKEN FROM REF. 28)

Material	Type of load		Maximum load, lb			Maximum load per rivet, lb		
			1 row	2 rows	3 rows	1 row	2 rows	3 rows
24 ST alclad	Static		4,600	8,400	9,925	575	525	414
	Fatigue R = 0.25	$N = 10^4$	3,700	5,900	6,000	463	369	250
		$N = 10^5$	2,000	3,000	3,300	250	188	138
		$N = 10^6$	930	1,700	2,050	104	106	85
	Fatigue R = 0.40	$N = 10^4$	4,000	7,000	7,300	500	438	304
		$N = 10^5$	2,500	3,600	4,200	313	225	175
		$N = 10^6$	1,300	2,000	2,400	163	125	100
75 ST alclad	Static		4,975	9,925		622	620	
	Fatigue R = 0.40	$N = 10^4$	4,050	5,000		506	313	
		$N = 10^5$	1,700	3,000		213	188	
		$N = 10^6$	900	1,500		113	94	

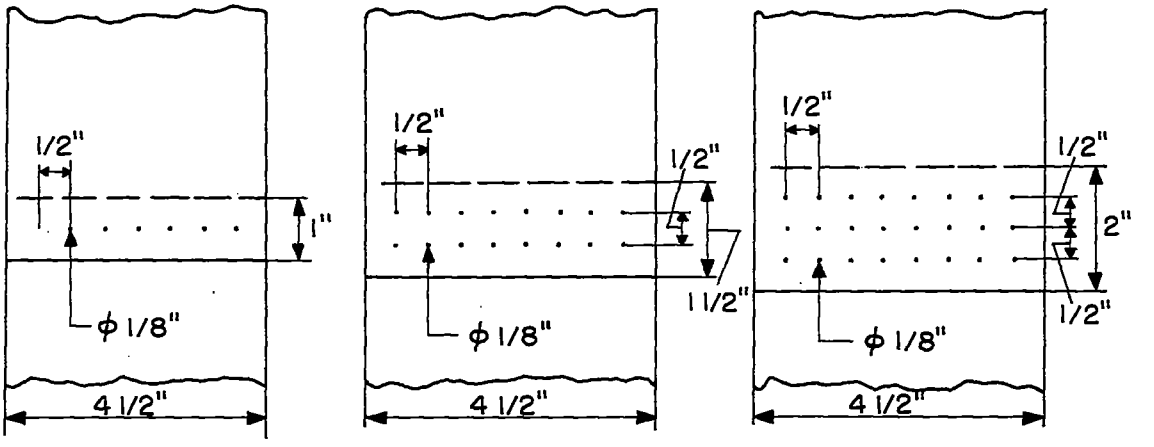

Plate thickness 0.040"

TABLE 5.1

EFFECTIVE STRESS CONCENTRATION FACTORS ON LUGS, WITH DIFFERENT DIMENSIONS IN TENSION (R = 0) (TAKEN FROM REF. 4)

					K_f			
Specimen type	d/b	e, mm	h/b	K_t(Frocht)	$N = 3 \times 10^4$	$N = 10^5$	$N = 10^6$	$N = 10^7$
F	0.67			2.2	1.52	1.66	2.04	2.10
G	.5	0	0.5	2.7	1.89	2.19	2.91	3.25
H	.33			3.7	2.14	2.56	3.79	3.67
I	0.67		0.67	2.15	1.25	1.28	1.39	1.34
K	.5	6	.63	2.6	1.56	1.76	2.59	2.86
L	.33		.58	3.6	1.85	2.19	3.55	3.97
F		0	0.5	2.2	1.52	1.66	2.04	2.10
I	0.67	6	.67	2.15	1.25	1.28	1.39	1.34
P		15	.92	2.1	1.29	1.34	1.63	1.79
H		0	0.5	3.7	2.14	2.56	3.79	3.76
L	0.33	6	.58	3.6	1.85	2.19	3.55	3.97
Q		24	.83	3.3	1.48	1.64	2.36	2.55

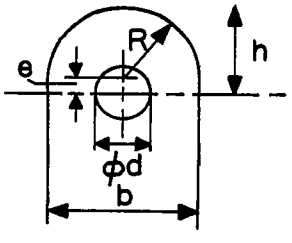

h = R + e = height of head

d = 24 mm

t = 6 mm

Aircraft material 3125.5

K_f values computed from values measured from small graphs, hence accuracy of K_f values not very great

The results for specimen types F, G, and H are reproduced in figure 5.2.

TABLE 5.2

INCREASE OF HOLE DIAMETER DURING FATIGUE ON DIFFERENT

TYPES OF SPECIMENS OF 24 ST (REF. 34)

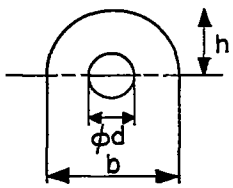

Type	b, mm	h, mm	K_t (Frocht)	t, mm
1	14	7	3.4	10
2	12	6	3.1	10
4	12	7.5	3.0	10
5	12	7.5	3.0	5

d = 5mm

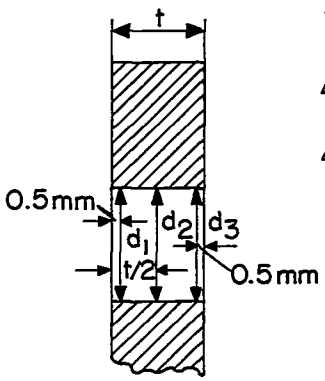

Increase of hole diameter measured at three places as indicated in sketch. In the table below are expressed:

$$\Delta d_{edge} = \frac{d_1 + d_3}{2} - d = \Delta d_r \text{ (in mm)}$$

$$\Delta d_{center} = d_2 - d = \Delta d_m \text{ (in mm)}$$

These were measured in fatigue tests for different bearing pressures (σ_{v1})

N \ Type		$\sigma_{v1} = 40$		$\sigma_{v1} = 20$				$\sigma_{v1} = 15$			
		4	5	1	2	4	5	1	2	4	5
10	Δd_r	0.24	0.03	0.010	0.012	0.009	0.006	0.008	0.004	0.006	0.001
	Δd_m	.05	.02	.002	.003	.000	.003	.006	.002	.001	.001
10^2	Δd_r			0.012	0.012	0.010	0.006				
	Δd_m			.003	.004	.001	.003				
10^3	Δd_r			.014	.012	.011	.006	0.008	0.004	0.007	0.001
	Δd_m			.005	.004	.001	.003	.006	.002	.001	.001
10^4	Δd_r			0.016	0.012	0.013	0.006				
	Δd_m			.005	.004	.001	.003				
10^5	Δd_r						0.008	0.010	0.005	0.009	0.002
	Δd_m						.003	.006	.005	.002	.001
10^6	Δd_r										0.002
	Δd_m										.001

The empty spaces indicate that failure has already occurred.

TABLE 5.3

THEORETICAL AND EFFECTIVE STRESS CONCENTRATION FACTORS ON STEEL AND DURAL SPECIMENS FOR DIFFERENT FATIGUE LIVES (REF. 34)

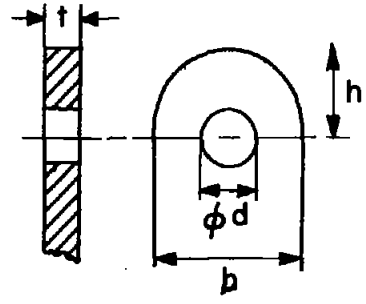

d = 5 mm

Specimen type	b, mm	h, mm	t, mm		K_t (Frocht)	K_f				
						Steel			Dural	
			Steel	Dural		$N = 10^5$	$N = 10^6$	$N = 10^7$	$N = 10^6$	$N = 10^7$
1	14	7	5	10	3.4	3.9	5.6	6.3	4.9	6.9
2	12	6	5	10	3.1	3.7	5.1	5.2	4.9	7.7
3	9.2	4.6	10	--	2.5	3.6	5.2	5.2	---	---
4	12	7.5	5	10	3.0	2.9	4.0	4.3	3.4	5.0
5	12	7.5	--	5	3.0	---	---	---	2.5	4.4

TABLE 5.4

THEORETICAL STRESS CONCENTRATION FACTORS OF NLL SPECIMENS,

CITED IN REPORT M. 1932 (REF. 16)

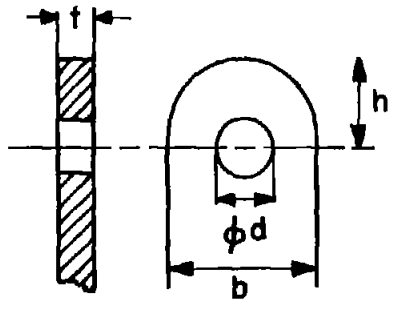

Specimen type	b, mm	h, mm	d/b	h/b	K_t (Frocht)	t, mm
a	23	11.5	0.435	0.59	2.9	10.0
b	27	15.0	.37	.555	3.25	7.7
c	31.6	19.3	.316	.611	3.7	6.0
b_1	27	13.5	.37	.50	3.3	7.7
c_1	31.6	15.8	.316	.50	3.8	6.0

d = 10 mm

Material: Aircraft material 3115.4

$\sigma_b = 37.8\ kg/mm^2$ $\sigma_{0.2} = 25.2 kg/mm^2$ $\delta_l = 5d = 24\%$

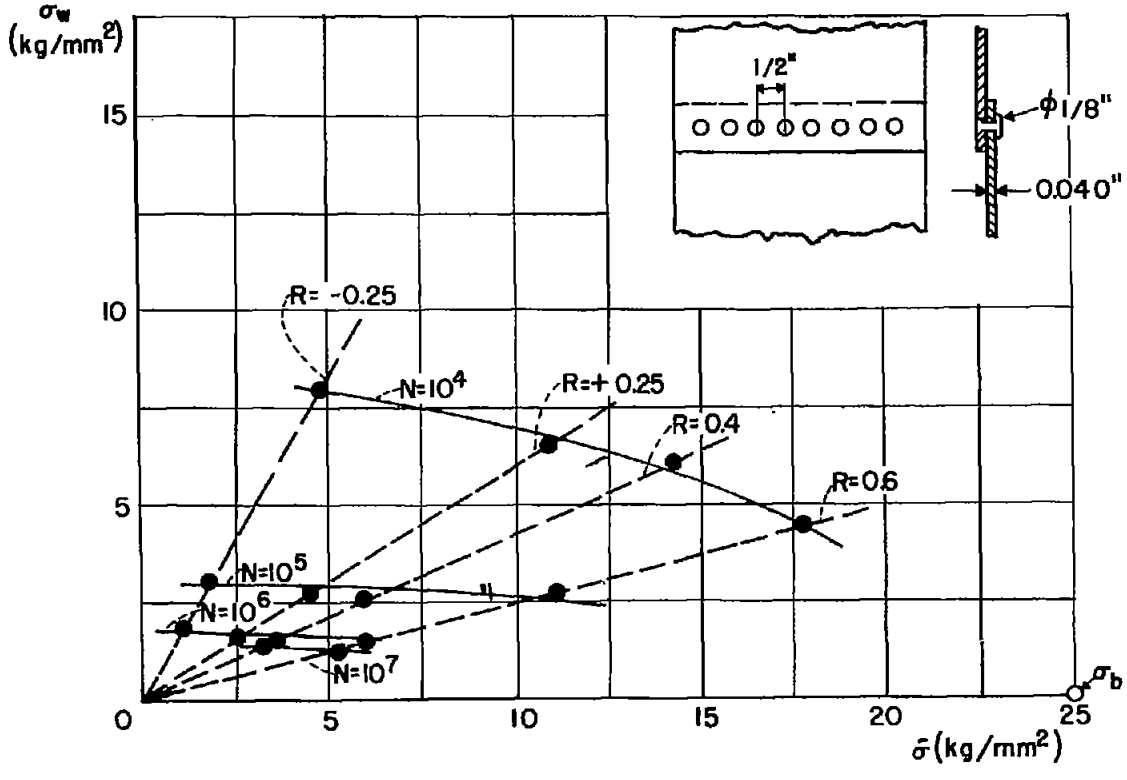

Figure 2.1.- Smith diagram of 75 ST alclad lap joint (according to data from ref. 29).

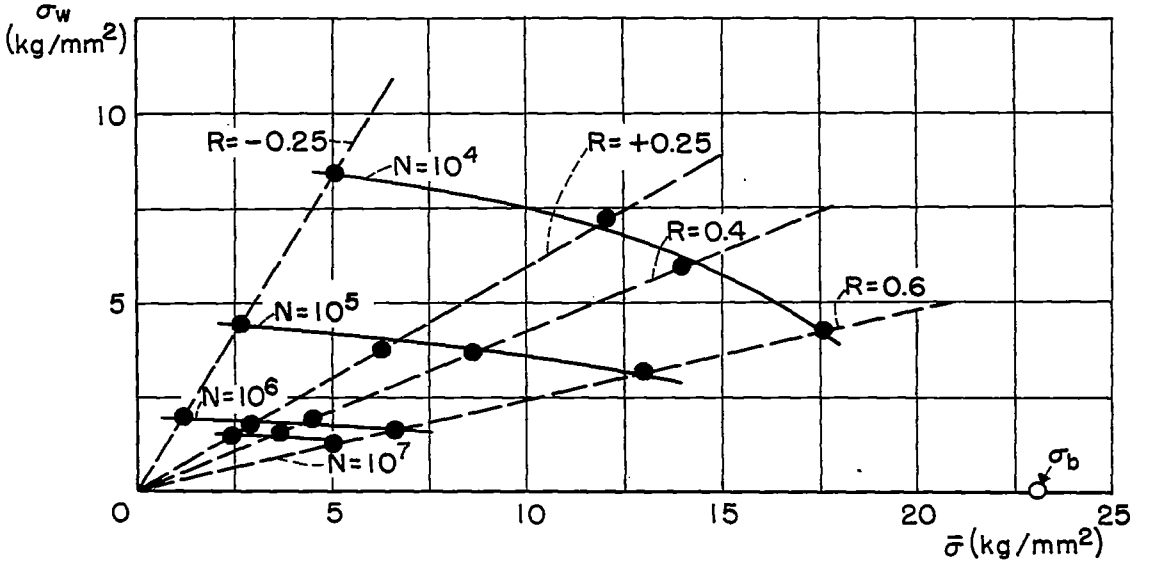

Figure 2.2.- Smith diagram of 24 ST alclad lap joint (specimen same as above) (according to data from ref. 29).

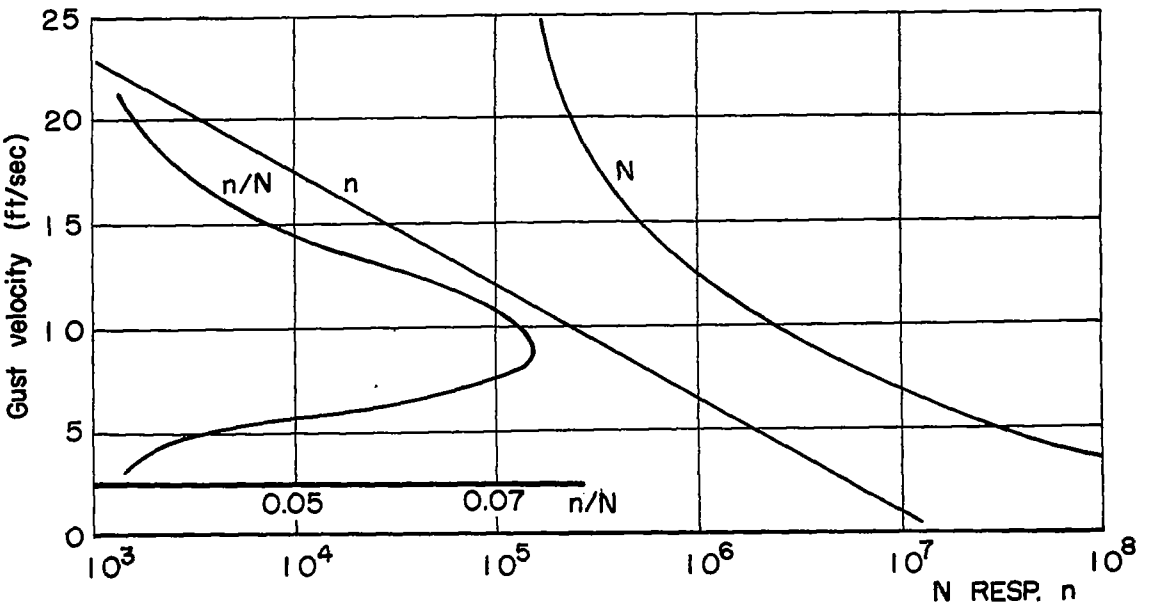

N number of gust loads that leads to failure

n number of gust loads with a velocity v which an airplane must encounter after having flown a certain distance (actually n is the number of gust loads in a certain gust speed range, i.e., between (v - 1/2) ft/sec and (v + 1/2) ft/sec)

n/N damage distribution according to Miner as function of occurring load (here gust velocity at the given load spectrum)

Figure 2.3.- Damage distribution at a specific load spectrum and a specific fatigue curve (ref. 31).

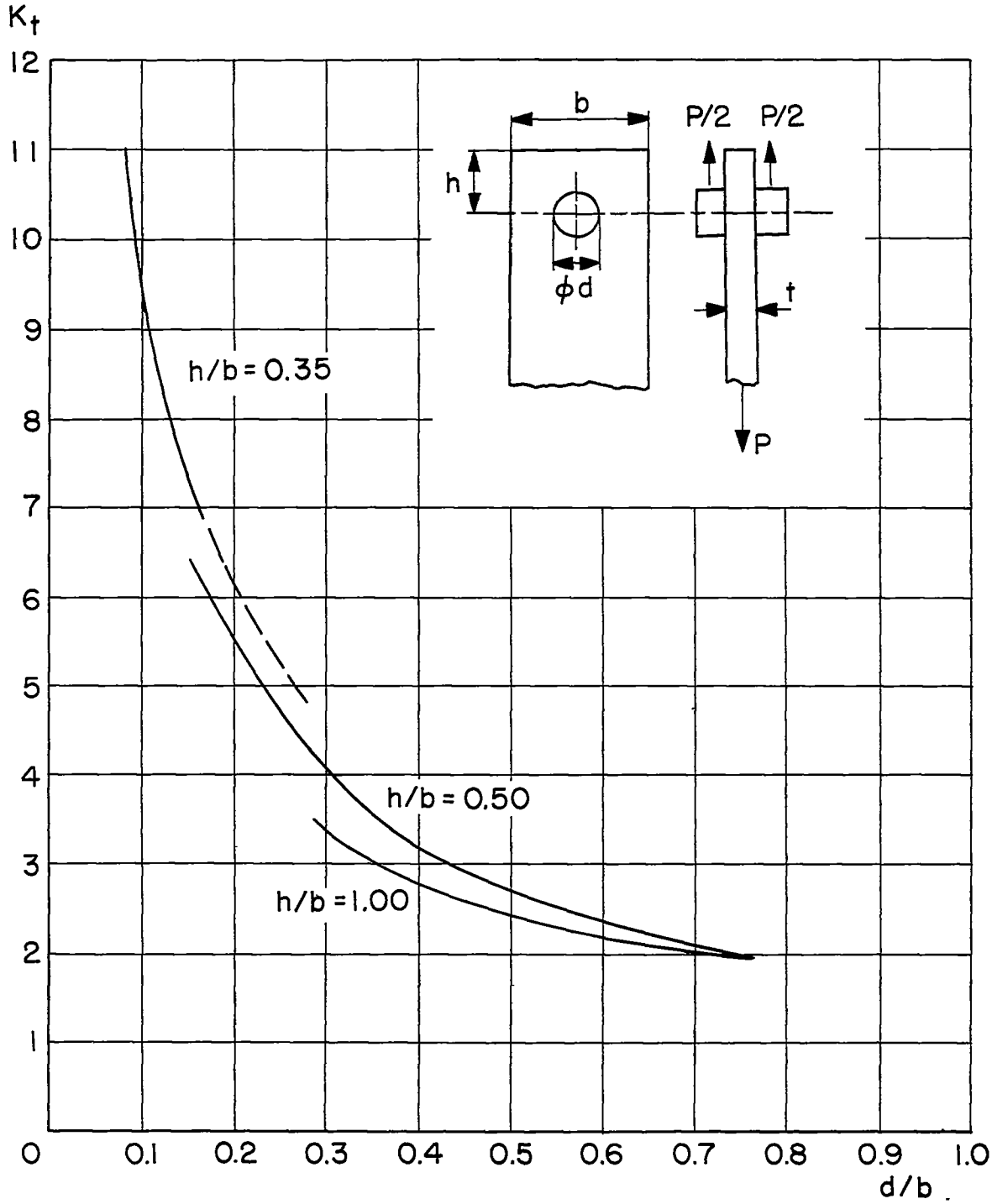

Figure 3.1.- Theoretical stress concentration factor on lugs (ref. 8)

$$K_t = \frac{\sigma_{max}}{P/(b - d)t}.$$

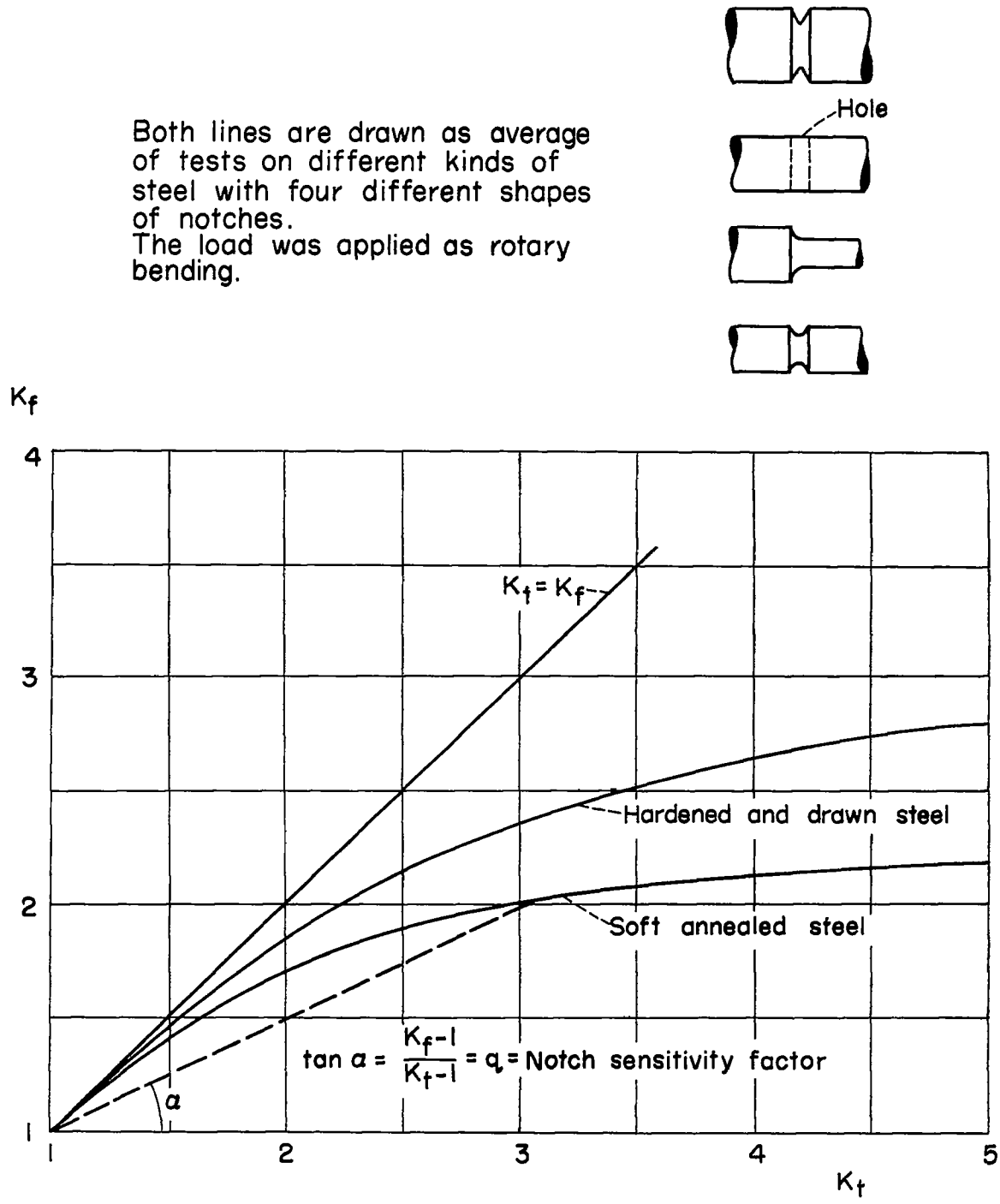

Figure 3.2.- The K_t-K_f relation at $N = \infty$ (from data of ref. 22).

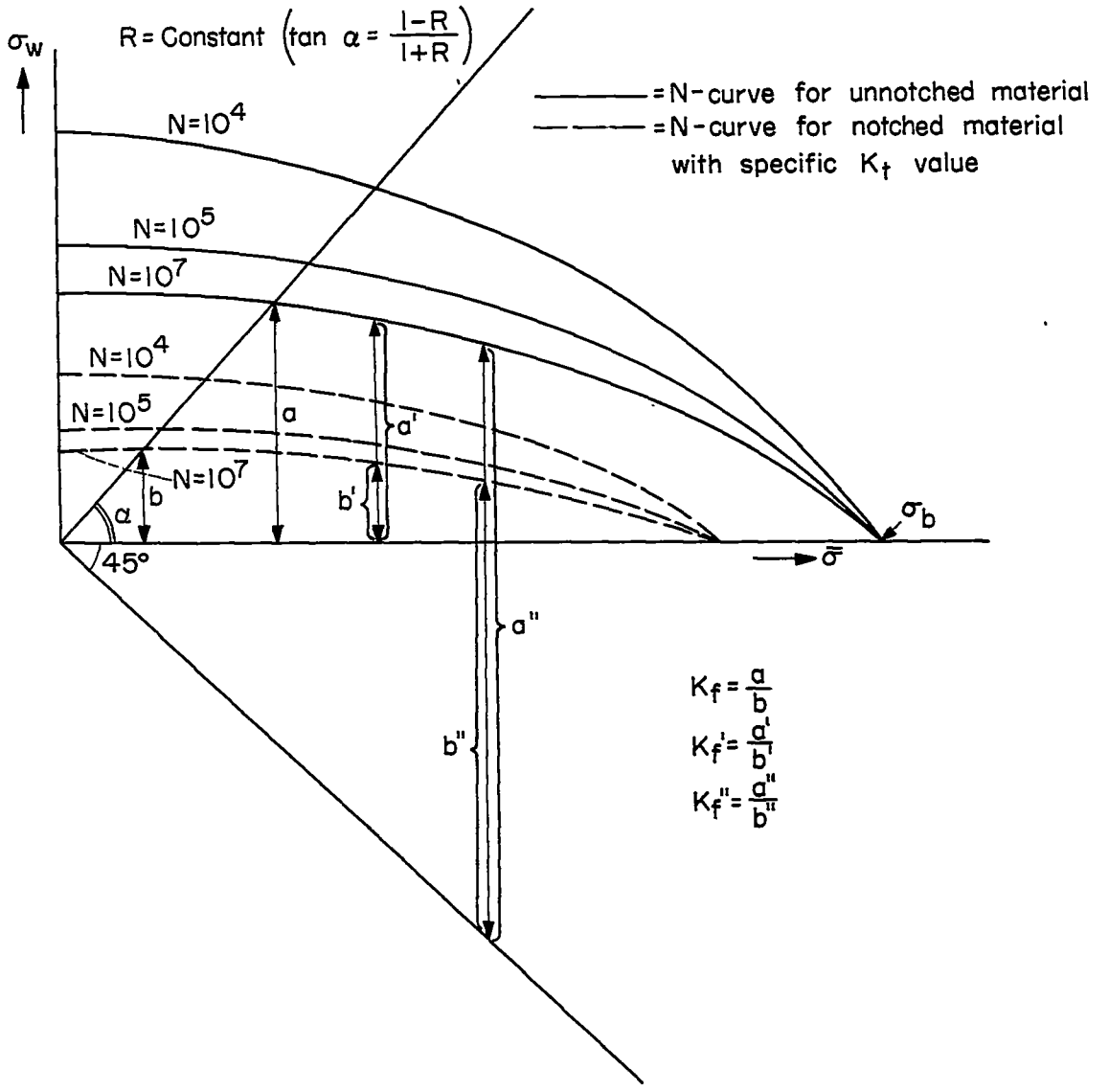

Figure 3.3.- Fatigue diagram of notched and unnotched material with effective stress concentration factors.

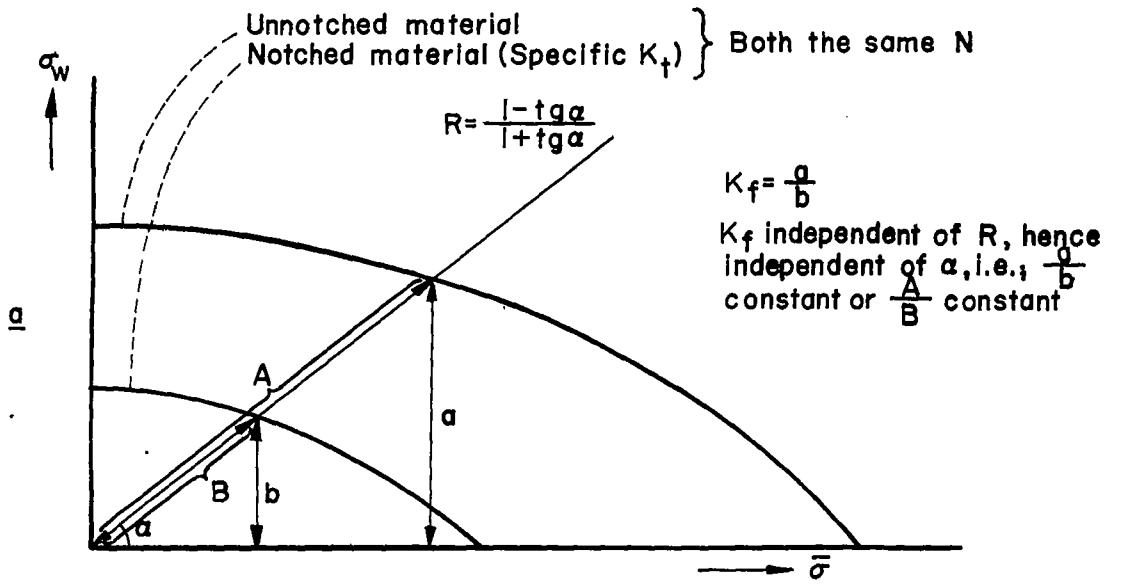

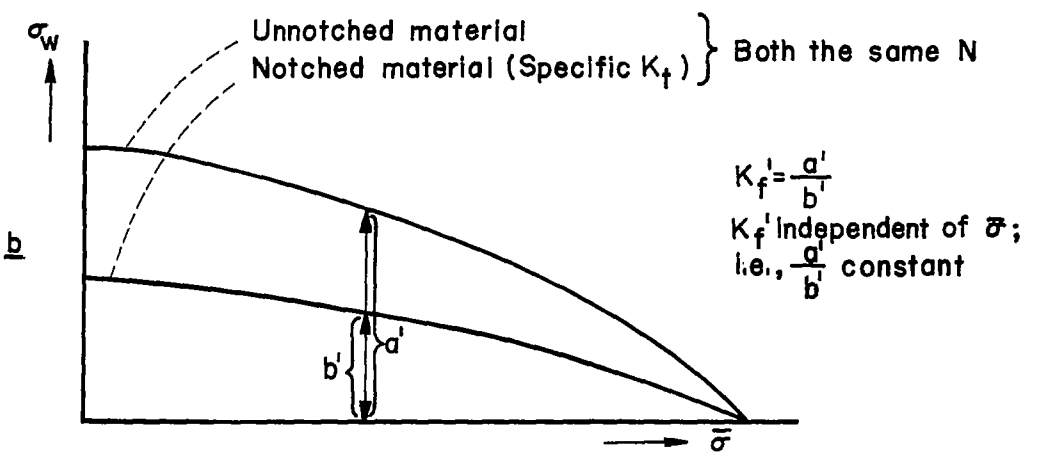

Figure 3.4.- Construction of fatigue diagram of notched material from fatigue diagram of unnotched material.

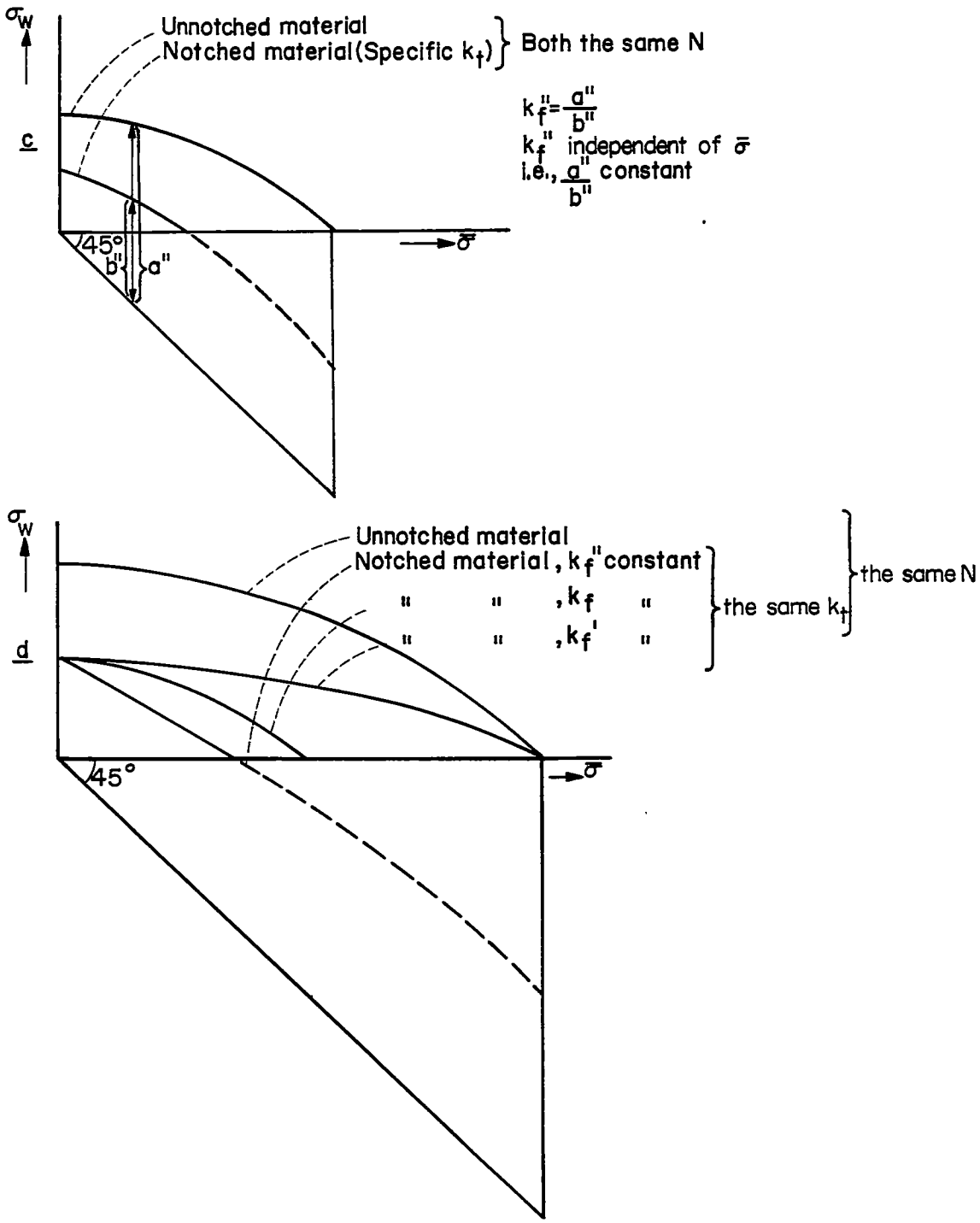

Figure 3.4.- Concluded.

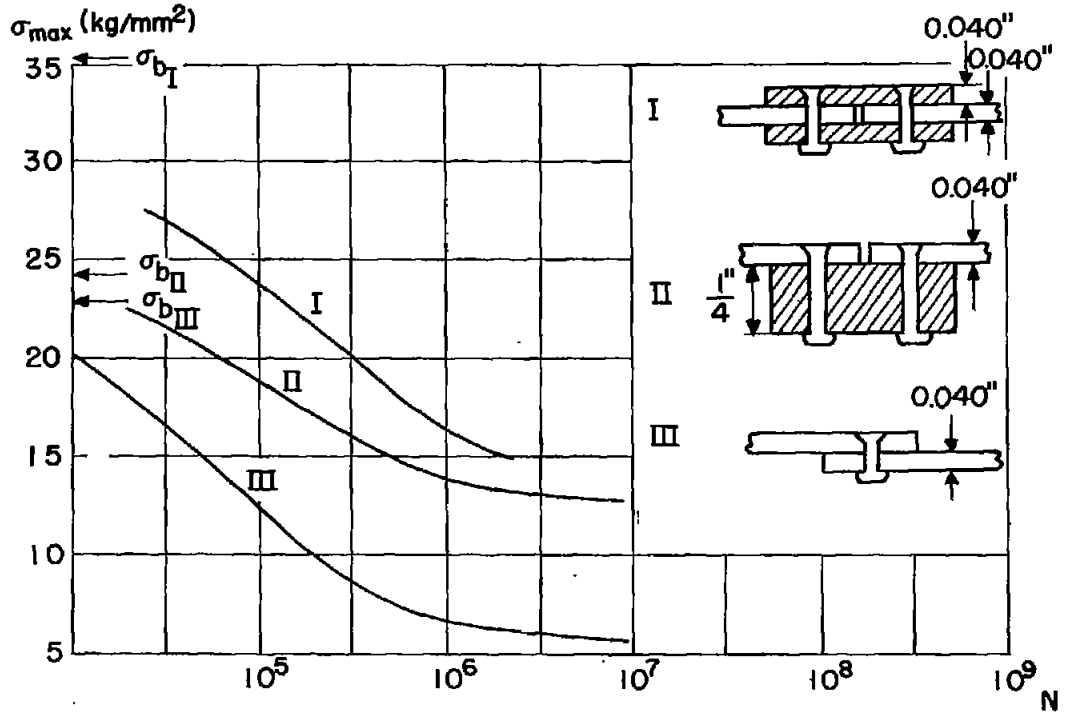

Figure 4.1.- Fatigue tests with three different types of riveted joints of 24 ST alclad (R = 0.40) (ref. 26).

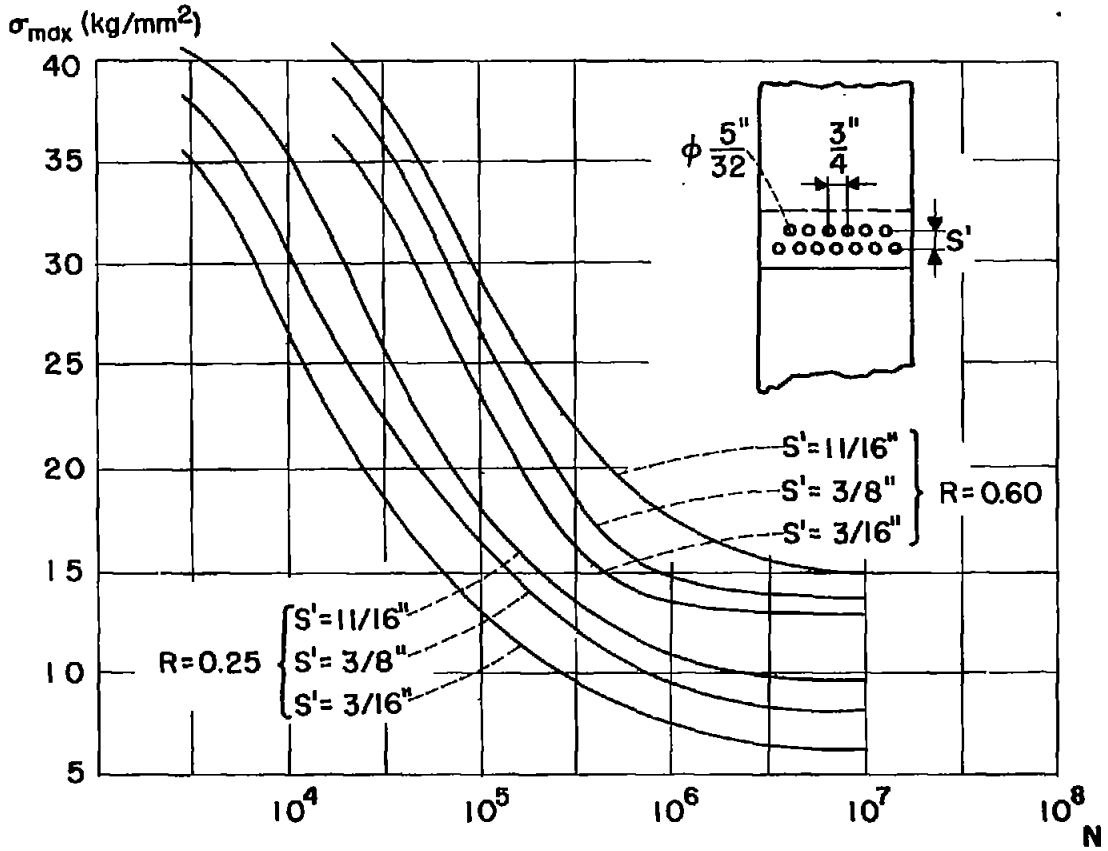

Figure 4.2.- Fatigue tests on double-row lap joints of 24 ST alclad. Effect of spacing of rivet rows (ref. 25).

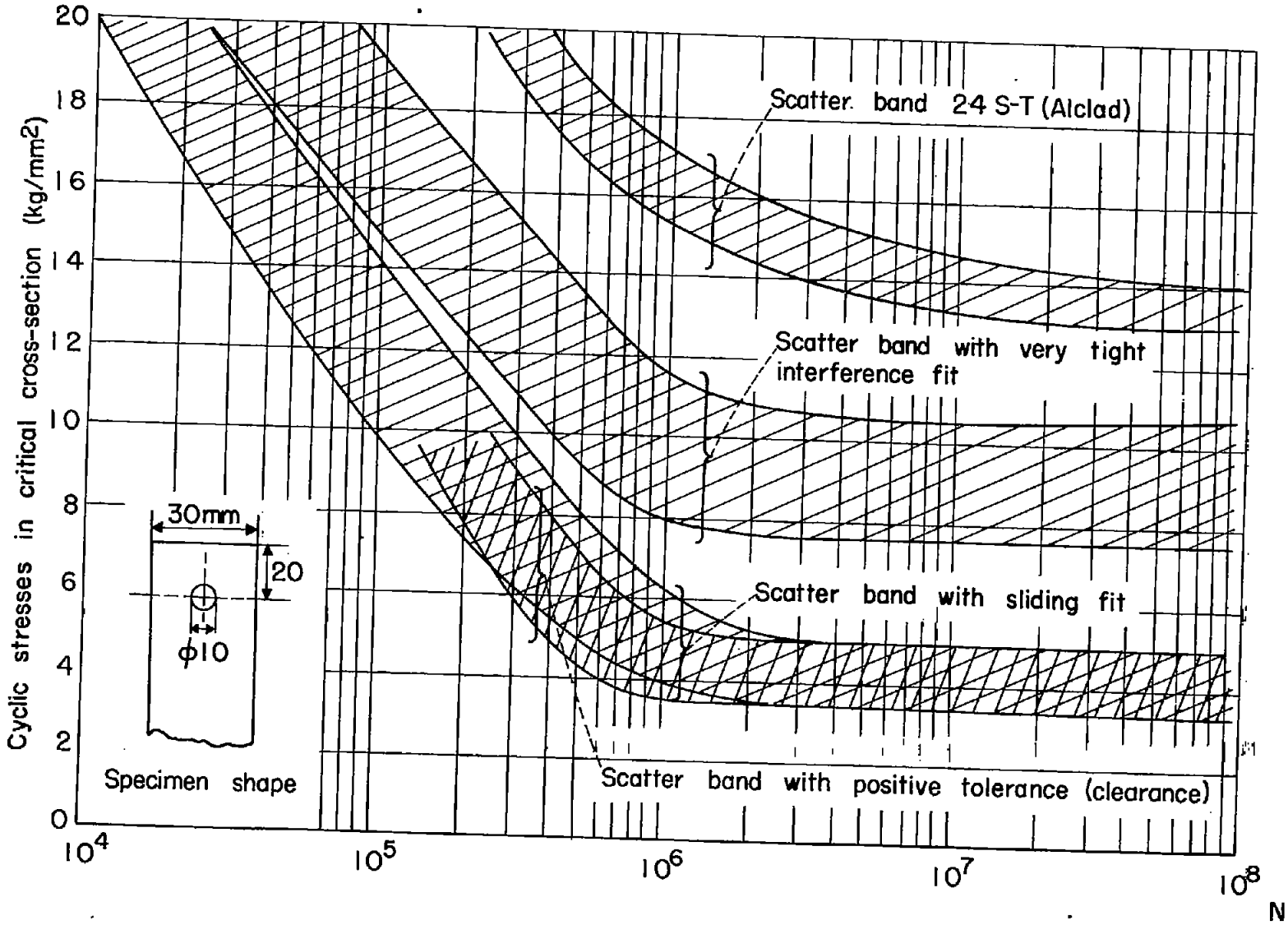

Figure 5.1.- Effect of the fit on the fatigue curve (R = 0) of lugs of 24 ST alclad (ref. 18). Bolt diameter: 10 mm.

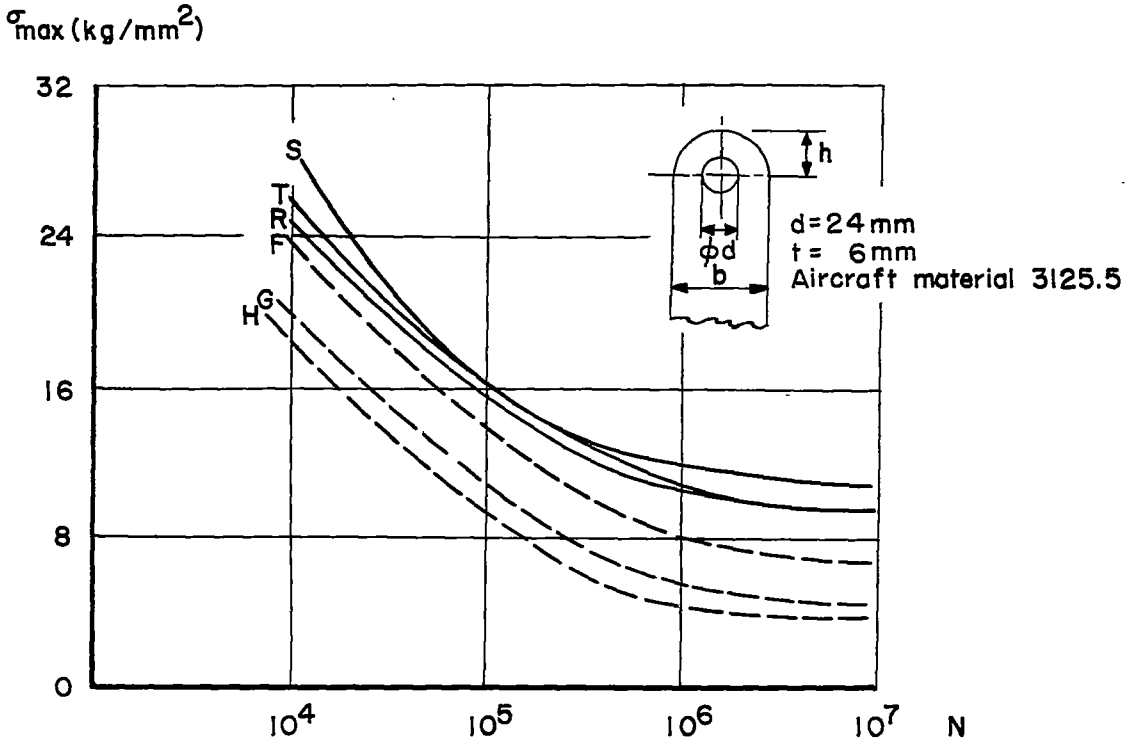

Specimen type		$\frac{b}{d}$
Not strengthened	Strengthened	
F	R	1.5
G	S	2
H	T	3

Figure 5.2.- Effect of strengthening wall of hole on fatigue strength in tension (R = 0) (ref. 4).

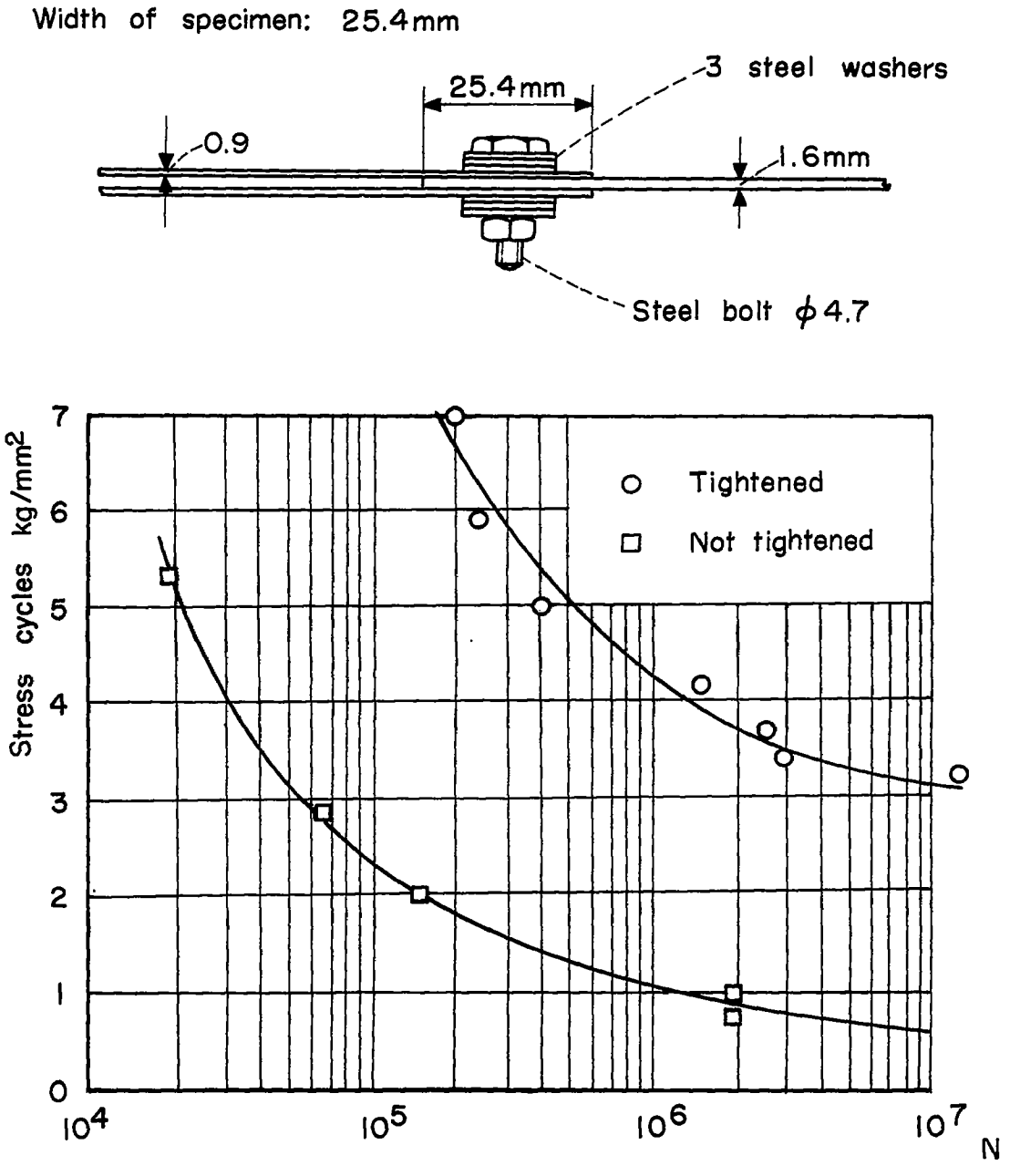

Figure 5.3.- Fatigue strength of a bolted joint of D.T.D. 646 with not-tightened and tightly clamped bolt (ref. 7).