NACA TM 1398

7954

TECH LIBRARY KAFB, NM
0144474

NATIONAL ADVISORY COMMITTEE FOR AERONAUTICS

TECHNICAL MEMORANDUM 1398

FORMATION OF A VORTEX AT THE EDGE OF A PLATE

By Leo Anton

Translation of "Ausbildung eines Wirbels an der Kante einer Platte," Göttinger Dissertation, Ingenieur-Archiv, vol. X, 1939.

Washington
March 1956

TECH LIBRARY KAFB, NM
0144474

NATIONAL ADVISORY COMMITTEE FOR AERONAUTICS

TECHNICAL MEMORANDUM 1398

FORMATION OF A VORTEX AT THE EDGE OF A PLATE*

By Leo Anton

1. INTRODUCTION

If a plate is moved from the state of rest transversely to its width through a fluid at rest, a small vortex forms at every edge at the start of the motion; by continual added influx of new parts of the fluid, that vortex becomes larger and grows into the flow. In case the flow is perpendicular to the plate, the position of the two vortices is symmetrical at the beginning of the motion of the fluid. In a later stage of development it is, as von Kármán has proved, unstable. Then new vortices originate alternately at the upper and lower end of the plate which group themselves behind the plate in a certain manner (von Kármán's vortex street).

In what follows, we shall treat the initial flow just described for a plate perpendicular to the approaching flow, where, therefore, flow direction and plate form a right angle. Since in this case the vortices are in the positions of reflected images, our investigation is limited to the formation and the growth of one vortex at one plate edge. We visualize the plate as suddenly set in motion and then moved uniformly at constant velocity. For a system of axes moved with the plate, the velocity at infinity is therefore to remain invariable throughout the flow duration. Moreover, we assume the plate to be laterally extended to infinite length so that we deal with a plane nonstationary flow phenomenon.

Solution of the problem is considerably facilitated by disregard of the friction. This is permissible since the friction of most fluids coming into question is very small. Thus we take as a basis an ideal fluid where, therefore, the viscosity is zero, and require furthermore that it be homogeneous and incompressible. In this fluid the flow described is then to be interpreted as a potential flow with free vortices distributed over a discontinuity surface, a so-called vortex sheet. The velocity field of such a flow is uniquely determined by the velocity at infinity and by the form and vortex distribution of this surface.

A solution for the motion of a fluid about a plate, starting from the state of rest, has, so far, been achieved only for infinitely small angles of attack. This borderline case has been treated by H. Wagner

---

*"Ausbildung eines Wirbels an der Kante einer Platte," Göttinger Dissertation, Ingenieur-Archiv, vol. X, 1939, pp. 411-427.

(ref. 1). Here the free vortices lie in a plane vortex sheet which extends from the trailing edge. The solution of the flow problem consists in the calculation of the distribution density of the discontinuity surface. Wagner performed these calculations for accelerated and for uniform motion of the plate. For finite angles of attack, as in our case, the discontinuity surface forms a strongly curved vortex sheet which obviously is rolled up into a spiral vortex. Thus, besides the distribution density, the shape of the discontinuity surface also is unknown.

We now make the following simplification. At the very beginning of the motion of the fluid, the magnitude of a vortex at the plate edge in proportion to the width of the plate is still very small. Consequently the vortices at both edges still lie outside of their mutual interference domain so that one deals practically with a flow about a plate of semi-infinite width. This means a great advantage. Since no unit length exists which would influence the process, the flow conditions must be independent of the magnitude of the vortex at the time τ. The growth of the vortex therefore consists in a similar increase of it. In this connection the treatises of L. Prandtl (ref. 2) and H. Kaden (ref. 3) must be mentioned. Prandtl performed a general investigation concerning the flow around a corner for certain laws of acceleration. No solution for the plate flow resulted from the Prandtl formulation; however, one can derive from it the laws of similitude. In the treatise mentioned, Prandtl surmises that the rolled-up vortex sheet in its interior may be of the type of a spiral $R = \text{const.}/\varphi^m$ (R and φ signify polar coordinates counted from the center of the spiral, m is a number). Kaden treats the rolling up of an unstable discontinuity surface, unilaterally of infinite length, into a spiral vortex. As we shall see later, Kaden's problem becomes identical with ours for the interior of the vortex. The same laws of similitude are valid for both cases. The solution for the vortex core $R = \text{const.}/\varphi^{2/3}$ found by Kaden applies, therefore, also to the interior of our vortex sheet; the above-mentioned prediction of Prandtl is thereby confirmed.

The outer part of the discontinuity surface, thus the transitional region from the spiral-shaped vortex core to the plate edge, we procure with the aid of graphical methods. The solution obtained is then used for finding the flow about the plate of finite width.

2. OUTLINE OF THE METHOD

In this section we shall briefly describe the method by which one arrives at solution of the problem. We shall start from the plate of finite width, and shall then treat the plate of infinite width as a special case.

In the case of the vortex-free potential flow about the plate placed transversely, the velocity at the edges is known to become infinitely large; however, under actual conditions this is never possible. We must therefore demand also in this case that the velocity there always has finite values. We attain this by assuming in the fluid so-called Helmholtz discontinuity surfaces which extend from the plate edges. By this expression one understands vortex sheets consisting of free vortices and obeying Helmholtz' laws. In contrast to this is the plate, which also is a discontinuity surface but no longer obeys Helmholtz' laws. It forms a rigid surface and exerts, therefore, pressures on the flow.

The plane in which the flow takes place will henceforth be designated as complex z-plane. The system of coordinates is selected so that the origin of the coordinates coincides with the center of the plate and the plate lies along an imaginary axis. The width of the plate is made equal to $2b$. The movement of the plate is to take place from the left to the right, or, which means the same, the flow is to approach the plate from the positive side. The constant velocity at infinity - which, with opposite sign, may also be interpreted as speed of the plate traveling in a fluid at rest - is to be $-v_\infty$ (fig. 1, left). We conformally map the z-plane onto a ζ-plane, by means of the transformation

$$\zeta = \sqrt{z^2 + b^2} \tag{1}$$

with the plate, which represents, of course, a piece of the imaginary axis in the z-plane, becoming a piece of the real axis in the new plane (fig. 1, right). The edges $z = \pm ib$ shift into the zero point $\zeta = 0$; the point at $z = 0$ transforms to the points $\pm b$ on the real ζ-axis. Furthermore, in this transformation the region at infinity in the z-plane goes over, without change, into that at infinity in the ζ-plane. Therefore the velocities at infinity in both planes are equal, thus $v(z = \infty) = v(\zeta = \infty) = -v_\infty$. As images of the discontinuity surfaces we obtain in the new plane again images which start from the point $\zeta = 0$. The new vortex sheets lie symmetrically to the real axis whereby the latter becomes a streamline so that the image of the plate also remains a streamline[1]. The flow in the ζ-plane corresponding to the plate flow is composed of the parallel flow and a flow caused by the free vortices of the discontinuity surfaces. We are now going to calculate its velocity field.

---

[1]For the case where the vortex sheets in the z-plane no longer lie symmetrical to the real axis, one must choose instead of (1) the transformation into a circle since the real axis in the ζ-plane then is no longer a streamline. For our case the selected transformation is preferable to that into the circle because the graphical calculations become considerably simpler.

We denote by ζ_F a variable point of the vortex sheet in the upper half plane and coordinate to it a circulation $d\Gamma$. The corresponding vortex point of the mirrored surface is then given by $\bar{\zeta}_F$ and has the same vortex strength, but with opposite sign, thus $-d\Gamma$. Both vortex points produce at an arbitrary point ζ of the plane a velocity the conjugate complex value of which is given by

$$\overline{dv_1(\zeta)} = \frac{d\Gamma}{2\pi i}\left(\frac{1}{\zeta - \zeta_F} - \frac{1}{\zeta - \bar{\zeta}_F}\right)$$

If one puts $d\Gamma = \gamma(\zeta_F)d\zeta_F$ wherein $\gamma(\zeta_F)$ represents the distribution density at a point ζ_F, and $d\zeta_F$ a line element of the surface, one obtains by integration over all points of the surfaces the velocity induced by them

$$\overline{v_1(\zeta)} = \frac{1}{2\pi i}\int_0^{\zeta_F'}\left(\frac{1}{\zeta - \zeta_F} - \frac{1}{\zeta - \bar{\zeta}_F}\right)\gamma(\zeta_F)d\zeta_F$$

(ζ_F' signifies the terminal point of the vortex sheet.) The parallel flow has the velocity $-v_\infty$. For the total velocity of the superimposed flow one may now write

$$\overline{v(\zeta)} = -v_\infty + \frac{1}{2\pi i}\int_0^{\zeta_F'}\left(\frac{1}{\zeta - \zeta_F} - \frac{1}{\zeta - \bar{\zeta}_F}\right)\gamma(\zeta_F)d\zeta_F \tag{2}$$

Between the velocities of both planes there exists the relationship

$$\overline{v(z)} = \overline{v(\zeta)}\frac{d\zeta}{dz} \tag{3}$$

from which one obtains the velocities for the z-plane. The condition that the velocity should assume finite values at the plate edges remains to be satisfied. As one can see very quickly, this requirement is fulfilled when the expression (2) for $\zeta = 0$ disappears, because the magnification ratio $d\zeta/dz$ becomes infinite for $\zeta = 0$ or $z = \pm ib$. One obtains therewith the condition[2]

$$v(\zeta = 0) = -v_\infty - \frac{1}{2\pi i}\int_0^{\zeta_F'}\left(\frac{1}{\zeta_F} - \frac{1}{\bar{\zeta}_F}\right)\gamma(\zeta_F)d\zeta_F = 0 \tag{4}$$

---

[2]The part stemming from $v_1(\zeta)$ becomes real for $\zeta = 0$.

which must always be satisfied. It is, however, not sufficient for determination of distribution density and shape of the discontinuity surface.

As long as the vortices are still very small compared to the plate, the plate may be regarded as infinitely wide in comparison with the vortices. For this case, the lack of a fixed comparative length is the reason that the form of the discontinuity surface is independent of the magnitude of the vortex configuration. The development of the discontinuity surface consists, therefore, initially in a similar magnification. This similar magnification can be fulfilled only in the case of a certain shape of the discontinuity surface, and of a certain distribution of the vortices over it. On the basis of this condition, we can therefore calculate the form and vortex distribution for the beginning of the motion. Starting from this initial condition we can then find, by further observation of the variation with time of the change in form, also the shapes and vortex distributions for the later times when the vortices are no longer small compared to the width of the plate.

Before performing the limiting process to the plate of infinite width, we choose a new system of coordinates z' which arises from the former coordinate system by parallel displacement, and the zero point of which is shifted to the upper edge $(z = +ib)$. We write

$$z = z' + ib \tag{5}$$

and replace, in addition, z' by

$$z' = \frac{H}{b} Z \quad \text{or} \quad Z = \frac{b}{H} z' \tag{6}$$

where H represents a scale unit. Accordingly, equation (1) assumes the form

$$\zeta = \sqrt{\left(\frac{H}{b} Z\right)^2 + 2iHZ} \tag{7}$$

The limiting process from the plate of finite width to that of infinite width $(b \longrightarrow \infty)$ yields a new transformation

$$\zeta = \sqrt{2iHZ} \quad \text{or} \quad Z = -i \frac{\zeta^2}{2H} \tag{8}$$

This is the transformation of the plane with a slit along the negative imaginary axis onto the upper half plane of the ζ-plane. If in the ζ-plane v_∞ continues denoting the free-stream velocity, the interpretation of v_∞ as traveling or, respectively, free-stream velocity, is lost in the Z-plane since in this plane the velocity at infinity tends $\longrightarrow 0$. The quantity v_∞ appears in this plane as the velocity which prevails in the case of vortex-free flow at the point $Z = -\frac{1}{2}iH$. All other considerations carried out so far concerning the plate of finite width may be directly transferred to the plate of infinite width.

3. THE INFINITELY WIDE PLATE

(a) Laws of Similitude

By the limiting process from a finitely wide to an infinitely wide plate which was just completed, a flow type was obtained for which the successive flow patterns are similar and, accordingly, the circulation of the vortex and the distribution density on the vortex sheet are similarly enlarged for this growth. We shall briefly derive here the laws which characterize this behavior. (As was remarked in the Introduction, the laws of similitude could be immediately derived from the quoted treatise of Prandtl.)

We observe the distance l of two points remaining in similar position during the similar enlargement of the discontinuity surface and assume it to be at the time t_1 of the amount l_1 and at the time t_2 of the amount l_2. We state as the time law for the enlargement

$$\frac{l_1}{l_2} = \left(\frac{t_1}{t_2}\right)^\lambda \tag{9}$$

where λ is a number yet to be determined. The law for the circulation Γ about similarly situated regions may be obtained as follows. Since the free-stream velocity in the ζ-plane is invariably v_∞, the same velocity must prevail also for the similar enlargement at similarly located points[3]. This velocity is composed of the free-stream velocity v_∞ and of the fields of the individual vortex elements. The influence of a

[3]In the Z-plane this is not the case, since here (for vortex-free flow) the velocity is constant at the point $Z = -\frac{1}{2}iH$ which is fixed during the similar enlargement, thus does not remain in similar position.

vortex element $\Delta\Gamma$, at the distance l_ζ from the point considered, on the velocity is $\Delta\Gamma/2\pi l_\zeta$. If during the growth $\Delta\Gamma$ and l_ζ are modified, $\Delta\Gamma/l_\zeta$, due to the constant velocity, also must be constant. For the circulation Γ about similarly situated regions of the ζ-plane, therefore,

$$\frac{\Gamma_1}{\Gamma_2} = \frac{l_{\zeta_1}}{l_{\zeta_2}}$$

is valid. In the Z-plane the corresponding distances are

$$\frac{l_1}{l_2} = \left(\frac{l_{\zeta_1}}{l_{\zeta_2}}\right)^2$$

Thus $\frac{\Gamma_1}{\Gamma_2}$ becomes in the Z-plane

$$\frac{\Gamma_1}{\Gamma_2} = \sqrt{\frac{l_1}{l_2}} = \left(\frac{t_1}{t_2}\right)^{\lambda/2} \tag{10}$$

If we designate by V the velocities which correspond to the law of similitude, we obtain for the velocity $V(Z)$ in the Z-plane which is proportional to Γ/l

$$\frac{V_1}{V_2} = \frac{\Gamma_1/l_1}{\Gamma_2/l_2} = \sqrt{\frac{l_2}{l_1}} = \left(\frac{t_1}{t_2}\right)^{-\lambda/2} \tag{11}$$

If we replace in the ratios above the time t_1 by the time 1 and the time t_2 by the time t, the laws of similitude read

$$l = l_1 t^\lambda \qquad \Gamma = \Gamma_1 t^{\lambda/2} \qquad V = V_1 t^{-\lambda/2} \tag{12}$$

wherein the number λ remains to be determined. For calculation of the number λ we form the velocity of growth of the distance l

$$\frac{dl}{dt} = l_1 \lambda t^{\lambda-1}$$

Since this velocity, like all velocities, must vary proportionally to $t^{-\lambda/2}$, there results

$$\lambda - 1 = -\frac{\lambda}{2}$$

thus

$$\lambda = \frac{2}{3}$$

Therewith the laws of similitude read

$$l = l_1 t^{2/3} \quad \Gamma = \Gamma_1 t^{1/3} \quad \underline{V} = V_1 t^{-1/3} \tag{13}$$

(b) Solution for the Vortex Core

Our task now consists in finding a shape for the spiral which satisfies these laws. They are the same laws Kaden (ref. 3) obtained as a result. Thus one deals here, too, with a similar problem. In particular, both problems become identical for the inner part of the vortex where in both cases a discontinuity surface consisting of free vortices is to be rolled up into a spiral vortex. It is therefore sufficient if we refer to Kaden's paper and here only briefly mention the results.

Let R and φ be polar coordinates of a system of coordinates the zero point of which coincides with the center of the spiral. For form and circulation Γ of the vortex core bounded by a circle of the radius R, Kaden obtained

$$R = \left(\frac{\chi t}{\pi\varphi}\right)^{2/3}, \quad \Gamma = 2\chi\sqrt{R} \tag{14}$$

The circumferential velocity, for radius R is

$$V_u = \frac{\Gamma}{2R\pi} = \frac{X}{\pi\sqrt{R}} \tag{15}$$

Therein t is the time, counted from the beginning of the motion. The quantity X is a constant, still unknown for the time being. It has the dimension velocity times square root of a length. Thus we may also introduce for it the dimensionless constant

$$k = \frac{X}{v_\infty\sqrt{H}} \tag{16}$$

(c) Solution for the Outer Loops of the Spiral

As was shown before, the behavior of the spiral is characterized in the interior, that is, for large angles φ, by $R = \left(\frac{Xt}{\pi\varphi}\right)^{2/3}$. For small angles φ, in contrast, especially where the discontinuity surface adjoins the edge, considerable deviations from this form occur. This transitional region can be found as follows. We visualize the plate as lying parallel to the straight line $\varphi = 0$; this assumption is insignificant for practical purposes since the spiral windings approach, in the inward direction, a circular form. We isolate, furthermore, at one point the inner part of the spiral, in which the form is prescribed with sufficient accuracy by $R = \left(\frac{Xt}{\pi\varphi}\right)^{2/3}$. For calculation of the velocity field outside of the spiral core, we visualize the latter as replaced by an isolated vortex at the center of gravity of the circulation. This is directly permissible since almost circular symmetry prevails in the interior of the spiral. The dissymmetry caused by the separation point brings it about that the center of gravity of the circulation does not coincide with the center of the spiral. For the calculations indicated later on, the separation point is placed at the point $\varphi = 2.5\pi$. The difference between the coordinates of the spiral center (a, h) and of the center of gravity (a_1, h_1) may be calculated, similarly as by Kaden, (ref. 3) to be approximately

$$a_1 - a = 0.006\ R_1 \quad \text{and} \quad h_1 - h = 0.031\ R_1 \tag{17}$$

if R_1 is the radius of the core of the spiral.

The outer loop which we now want to calculate, extends from the separation point ($\varphi = 2.5\pi$) to the plate edge ($\varphi = \varphi^*$). Its shape and vortex distribution γ as well as the position and circulation Γ_1 of the vortex core we assume, at first, arbitrarily, with a factor of similitude χ common to both quantities and at present not yet determined, (equations (14) and (15)), and make therewith the transition into the ζ-plane. Therein γ is transformed into

$$\gamma' = \gamma \frac{dz}{d\zeta}$$

whereas the circulation Γ_1 remains unchanged. In this mapping plane (ζ-plane) the velocities stemming from the vortex may be calculated as the field of the vortex core and the distribution on the outer winding, likewise their mirrored images. By superimposition of the undisturbed velocity v_∞ there results the velocity field v' in the ζ-plane. First, one ascertains the velocity at the point $\zeta = 0$. From the condition that this velocity must be zero (equation (4)) results factor χ, still undetermined at first, for the circulation Γ_1 and the distribution density γ.

In the conformal mapping onto the Z-plane the velocities v' of the ζ-plane are transformed into the velocities v of the Z-plane, according to the relationship

$$\bar{v} = \bar{v}' \frac{d\zeta}{dZ}$$

where $\bar{v}$ and $\bar{v}'$ signify the conjugate values of the velocities. The velocity of the individual vortex concentrated at the core is obtained by omission of the field of this vortex. It must, however, be noted that in the transition from the ζ-plane to the Z-plane the field of this vortex is deformed; hence an additional term appears in the conversion of the velocities. In the ζ-plane the potential of the core vortex to be omitted is

$$\Phi_K(\zeta) = \frac{\Gamma_i}{2\pi i} \ln\left(\zeta - \zeta_0\right)$$

In the Z-plane the potential of the vortex to be omitted is

$$\begin{aligned}\Phi_K(Z) &= \frac{\Gamma_i}{2\pi i} \ln\left(Z - Z_0\right) \\ &= \frac{\Gamma_i}{2\pi i} \ln\left(\zeta^2 - \zeta_0^2\right) \\ &= \frac{\Gamma_i}{2\pi i} \ln\left(\zeta - \zeta_0\right) + \frac{\Gamma_i}{2\pi i} \ln\left(\zeta + \zeta_0\right)\end{aligned}$$

In order to calculate the velocity for the Z-plane we must, therefore, subtract, besides the potential $\Phi_K(\zeta)$, also the additional potential $\frac{\Gamma_i}{2\pi i} \ln\left(\zeta + \zeta_0\right)$ to which corresponds a velocity

$$\bar{v}'_{\text{additional}} = \frac{\Gamma_i}{2\pi i\left(\zeta + \zeta_0\right)}$$

in the ζ-plane or, respectively,

$$\bar{v}_{\text{additional}} = \frac{\Gamma_i}{2\pi i\left(\zeta + \zeta_0\right)} \frac{d\zeta}{dZ} \tag{18}$$

in the Z-plane.

Once one has calculated the velocities for individual points of the discontinuity surface one resolves them, most advantageously, into normal and tangential velocities v_n and v_t, and plots the latter as functions of the arc length s. By combination of the function values one obtains the velocities pertaining to each point of the vortex sheet; from them results the motion of the assumed vortex sheet.

A fluid particle at the point P of the spiral having the velocity v (fig. 2) moves by the distance $PP_1 = v$ in the unit time. Due to the

similar enlargement, the point P is tranformed during this time into the similarly located point P_2.

The velocity at which the similarly situated points are displaced is assumed to be V so that the distance is $PP_2 = V$. To have P_1 come to lie on the similarly enlarged spiral, the normal components v_n and V_n of the two velocities v and V must be equal or

$$\Delta v_n = v_n - V_n = 0 \tag{19}$$

We observe the point P on its path to the similarly situated point P_2 and find that this path does not represent the motion of a fluid particle. Rather, the fluid flows, with the velocity $v - V$, through the point moving from P to P_2.

If v_T and V_T signify the tangential components of the velocities v and V, the circulation in flowing with the fluid into the core inside of P or P_2, respectively, during the time Δt is

$$\Delta\Gamma = (v_T - V_T)\gamma\Delta t$$

Hence there results for the region inside of P, which is being similarly enlarged

$$\frac{\partial\Gamma}{\partial t} = (v_T - V_T)\gamma$$

According to the laws of similitude (13), one must have for a region being similarly enlarged

$$\frac{\partial\Gamma}{\partial t} = \Gamma_1 \frac{1}{3} t^{-2/3} = \frac{\Gamma}{3t}$$

The two values of $d\Gamma/dt$ must agree in order to have the similitude satisfied, therefore the equation

$$\Delta \frac{d\Gamma}{dt} = (v_T - V_T)\gamma - \frac{\Gamma}{3t} = 0 \tag{20}$$

must apply. Since the distribution density is

$$\gamma = -\frac{\partial \Gamma}{\partial s}$$

we may write instead of (20) also

$$\Delta \frac{\partial \gamma}{\partial t} = -\frac{\partial}{\partial s}\left[(v_T - V_T)\gamma\right] - \frac{\gamma}{3t} = 0 \tag{21}$$

With the aid of the equations (19) and (21) it is now possible to find the shape and vortex distribution of the outer loop.

We shall perform the calculation of these quantities for a time t

$$t = \frac{\pi}{\chi} H^{3/2} \qquad (20)^4$$

for which the equation (14) of the spiral core assumes the simplified form

$$R = \frac{H}{\varphi^{2/3}} \qquad (21)^4$$

We select as the initial form for the entire spiral the form $R = H/\varphi^{2/3}$ and place it as a first try so that it joins the plate at the point $\varphi = \varphi^* = \pi/2$ (fig. 3). The break originated at the edge is merely a flow which, as one readily understands, disappears at the next moment. Except for the factor χ, the circulation

$$\Gamma = 2\chi\sqrt{R} \tag{22}$$

---

[4]The duplication of the equation numbers 20 and 21 follows that of the original Germain document.

is known to us. For the core which we shall assume to begin at $\varphi = 2.5\pi$, we have

$$R = R_i = \frac{H}{(2.5\pi)^{2/3}}$$

Thus Γ_i becomes

$$\Gamma_i = 2\chi\sqrt{\frac{H}{(2.5\pi)^{2/3}}} \tag{23}$$

The distribution density is

$$\gamma = \frac{\partial\Gamma}{\partial s} = \frac{\partial\Gamma}{\partial R}\frac{\partial R}{\partial s} = \chi\frac{R}{\sqrt{9/4H^3 + R^3}} = \frac{\chi}{\sqrt{H}\varphi^{2/3}\sqrt{9/4 + \varphi^{-2}}} \tag{24}$$

In figure 4 this distribution density γ is plotted as a function of the arc length s. The conformal mapping (8), in combination with the reflection at the ξ-axis, leads to the double spiral indicated in figure 5. The distribution density in this plane (image plane) is represented in figure 6. When we calculate the velocity at the zero point, we obtain, on the basis of equation (4), a condition for the still undetermined value χ. There results

$$\chi_1 = 2.36\sqrt{H}v_\infty \quad \text{or} \quad k_1 = 2.36$$

As an example for the determination of the velocity field we shall here briefly reproduce the calculation of the velocity at the center of gravity. In the ζ-plane an element of the discontinuity surface ds' induces at the center of gravity the velocity components

$$dv_{\xi_1}' = \frac{\gamma(s')}{2\pi R_s'}\sin\psi\, ds', \quad dv_{\eta_1}' = \frac{\gamma(s')}{2\pi R_s'}\cos\psi\, ds'$$

when R_s' denotes the distance of the element from the center of gravity and ψ the angle of the radius vector from the center of gravity to the element with the ξ-axis (fig. 5). By integration over s' from the zero point to the core boundary ($\varphi = 2.5\pi$, $s' = 2.62$ H) and over the corresponding curve ($\bar{s}'$) of the image one obtains v_{ξ_1}' and v_{η_1}'. In figure 7 the values dv_{ξ_1}'/ds' and dv_{η_1}'/ds' are plotted against s' or $\bar{s}'$, respectively. The quantities v_{ξ_1}' and v_{η_1}' are obtained by circumscribing, with the aid of a planimeter, the cross-hatched areas bounded by the curves and the abscissa axis

$$v_{\xi_1}' = 0.27v_\infty \qquad v_{\eta_1}' = 0$$

These values represent the influence of the outer loop of the spiral. The image of the vortex core causes the velocities

$$v_{\xi_2}' = \frac{\Gamma_i}{2\pi 2h'} = 0.22v_\infty \qquad v_{\eta_2}' = 0$$

if h' signifies the distance of the center of gravity of the core from the ξ-axis. The vortex core itself does not contribute to the velocity of its own center of gravity in the ζ-plane. However, it must be noted that, according to the explanations on pp. 10 and 11, in the conversion to the Z-plane a term stemming from the vortex core

$$v_{\xi_3}' = 0.11\ v_\infty \qquad v_{\eta_3}' = 0.11\ v_\infty$$

appears.

For the resultant velocity one obtains

$$v_\xi' = -\ v_\infty + v_{\xi_1} + v_{\xi_2} + v_{\xi_3} = -0.40v_\infty$$

$$v_\eta' = v_{\eta_1} + v_{\eta_2} + v_{\eta_3} = 0.11v_\infty$$

whence there results, by conversion to the Z-plane,

$$v_x = H \frac{\xi v_\eta' + \eta v_\xi'}{\xi^2 + \eta^2} = - 0.29 v_\infty$$

$$v_y = H \frac{\eta v_\eta' - \xi v_\xi'}{\xi^2 + \eta^2} = - 0.17 v_\infty$$

According to the law of similitude,

$$v_x = - 0.37 v_\infty \qquad v_y = 0$$

would have to be valid. The center of gravity thus shows for the assumptions made, relatively to its required motion, a wrong motion obliquely downward, toward the plate, with the velocity components

$$\Delta v_x = v_x = V_x = 0.08 v_\infty$$

$$\Delta v_y = v_y - V_y = - 0.17 v_\infty$$

In the same manner the velocities for the points of the outer winding are calculated. Of course, one has to add a term which represents the influence of the core; on the other hand, the additional term v_3 does not appear here. We find the calculated normal and tangential components plotted in figures 8a and 8c. As can be seen from figures 8b and 8d, equations (19) and (21) are not satisfied. In other words, the shape and vortex distribution assumed deviate from the actual solution. We now modify the position of the core c.g. in the sense of Δv_x and Δv_y and the shape and vortex distribution of the outer loop in the sense of the differences Δv_n and $\Delta \frac{d\gamma}{dt}$. The form of the spiral core remains unchangedly $R = \left(\frac{\chi t}{\pi \varphi}\right)^{2/3} = \frac{H}{\varphi^{3/2}}$. We now repeat the calculation procedure

carried out so far. After several steps, the first two of which are represented in figures 9 to 12, one arrives finally at a solution that satisfies the laws of similitude; it is plotted in figure 13.

In figure 14 is the radius of the spiral; in figure 15 its distribution density is plotted as functions of the center angle and of the arc length s, respectively.

For more convenient further use, the most important constants necessary for characterization of the spiral vortex have been briefly compiled below. For the solution indicated in figures 13 to 15, the calculation yields the time

$$t = 1.42 \frac{H}{v_\infty}$$

the constant

$$\chi = 2.22H^{1/2}v_\infty \qquad k = 2.22$$

the coordinates of the spiral center

$$a = -0.53H \qquad h = -0.22H$$

the total circulation of the spiral vortex

$$\Gamma = 4.20Hv_\infty$$

For the assumed core boundary at $\varphi = 2.5\pi$ the radius of the core is

$$R_1 = 0.267H$$

the circulation of the core

$$\Gamma_1 = 2.3Hv_\infty$$

For an arbitrary time t one obtains

$$a = -0.4Ht^{2/3} \qquad h = -0.165Ht^{2/3}$$

$$\Gamma = 3.7Hv_\infty t^{1/3}$$

$$R = \frac{0.8}{\varphi^{2/3}} Ht^{2/3} = 2\frac{a}{\varphi^{2/3}}$$

$$R_1 = 0.2Ht^{2/3} = 0.5a$$

$$\Gamma_1 = 2Hv_\infty t^{1/3} = 3.15\sqrt{a}$$

4. THE PLATE OF FINITE WIDTH

With the solution found for the plate of infinite width, we know the initial flow conditions about a plate of finite width, where the vortices are still small compared to the plate width. We know that for this initial state the successive vortex images originate from one another by similar enlargement. However, as soon as the vortices assume a magnitude which is no longer negligible compared to the plate width, the presupposition for a similar growth no longer holds true. Yet, starting from the form and distribution density we found for the still very small vortices, we can calculate the variation of this form and distribution density, using the values of Δv_n [(19)] and $\Delta \frac{\partial \gamma}{\partial t}$ [(21)] which now, with growing vortices, more and more deviate from 0. We only must make use of the transformation by means of (1) instead of the transformation by means of (8). If we start from a known form and distribution density at a time t_1, we obtain the deviation of the form and distribution density from those which would result for similar enlargement according to the time laws (13), at the time t_2 as being

$$\Delta n = \int_{t_1}^{t_2} \Delta v_n dt \quad \text{and} \quad \Delta \gamma = \int_{t_1}^{t_2} \Delta \frac{\partial \gamma}{\partial t} dt$$

The graphical determination of the required quantities is greatly hampered by the fact that the vortices are at the beginning very small and later very large. We can avoid this difficulty by visualizing the figure, at every instant, enlarged or reduced in such a manner that the vortex would always remain the same if it would keep on growing according to the laws of similitude that are valid for the beginning. The figure in actual size we denote as figure I and the quantities valid for it by the subscript I, the enlarged figure as figure II and the corresponding quantities by the subscript II. At the initial stage, the enlarged vortex is to agree precisely with the one calculated for the plate of infinite width in the preceding section. Let us call the ratio of magnification in every case ϵ. If we reduce in the magnified figure all velocities simultaneously at suitable points in the proportion $1/\sqrt{\epsilon}$, the circulations Γ are magnified in the proportion $\sqrt{\epsilon}$. The distribution densities γ are reduced in the proportion $1/\sqrt{\epsilon}$.

For the potential flow about the plate of the width $2b$ in the plane I there results in the neighborhood of the edge the velocity

$$v_I = \frac{v_\infty \sqrt{\frac{b}{2}}}{\sqrt{b - y}} \tag{25}$$

For the plate of infinite length treated in section 3 the corresponding velocity was

$$v = \frac{v_\infty \sqrt{\frac{H}{2}}}{\sqrt{y'}} \tag{26}$$

wherein $y' = b - y$ signifies the distance from the edge of the plate. In order to obtain for the beginning of the motion the same conditions as for the flow about the plate of infinite width treated before, we select the width of the plate $2b$ in such a manner that

$$b = H$$

For the above stipulation, exactly the velocity v_∞ prevails in the magnified figure, while ϵ is still very large, at a point at a distance of $b/2$ from the edge. In the case of the plate of infinite length treated before, this point lay at a distance $H/2$ from the edge. Since we equated $b = H$, we obtain in the magnified figure precisely the flow treated in section 3.

According to equation (14), for the growing vortex core of the plate of infinite width

$$R = \left(\frac{\chi t}{\pi\varphi}\right)^{2/3}$$

Since at the initial stage the flow about the edge of the plate of the finite width $2b = 2H$ coincides with the flow about the edge of the plate of infinite width, this formula applies also to the initial stage in the case of a plate of finite width. By means of the magnification by the factor ϵ, this initial vortex is to be transformed into the flow treated for which $R = \frac{H}{\varphi^{2/3}} = \frac{b}{\varphi^{2/3}}$. Thus necessarily

$$R\epsilon = \epsilon\left(\frac{\chi t}{\pi\varphi}\right)^{2/3} = \frac{b}{\varphi^{2/3}}$$

Hence there results

$$\epsilon = \left(\frac{\pi}{\chi}\right)^{2/3} bt^{-2/3} \tag{27}$$

Since in the plane I, at the beginning of the motion, the circulations Γ_I grow, according to (13), with $t^{1/3}$, we obtain in the plane II, where they appear magnified in the proportion $\sqrt{\epsilon}$, constant circulations and constant distribution densities.

At the beginning of the motion $\epsilon = \infty$. The plate edges lie in the plane II at an infinite distance from one another so that we actually have the case of the plate of infinite width. In time, however, ϵ attains smaller finite values, and we obtain in the plane II also a plate of finite width. Therewith the velocities become different, and we obtain deviations from the similar magnification. In order to calculate the velocities in the plane II, we transform this z_{II}-plane onto a ζ-plane which we shall characterize by the subscript III, by means of the function

$$\zeta_{III} = \sqrt{\frac{z_{II}^2 + (\epsilon b)^2}{\epsilon}} \tag{28}$$

For very large ϵ this mapping is transformed into the infinite plate according to (8) in the neighborhood of the edge. For finite ϵ, however, other shapes result for the mapped vortices, and that is the very reason which causes the modifications of the velocities and therewith the deviations from similar vortex growth.

As soon as, due to this deviation, the form and distribution density of the vortices have changed with respect to the similar growth, this also contributes to the variation of the velocities. Since, however, form and distribution density change, at first, only very slowly compared to the similar growth, one may in the plane II assume the form and distribution density as constant in turn through a large time interval, and need consider in this time interval only the modification of the transformation in the plane III, due to the modification of the value ϵ.

For such a time interval t_1 to t_2 (the first starts with $t = 0$), one calculates for several intermediate times the normal and tangential components $v_{n_{II}}$ and $v_{t_{II}}$ of the velocities of the plane II with the aid of the transformation onto the plane III in the same manner as in the case of the plate of infinite length. One forms furthermore the differences with respect to the velocities of the similar magnification $V_{n_{II}}$ and $V_{t_{II}}$ and obtains then by transfer to the plane I the values (19)

$$\Delta v_{n_I} = \sqrt{\epsilon}\Delta v_{n_{II}} = \sqrt{\epsilon}\left(v_{n_{II}} - V_{n_{II}}\right) \tag{29}$$

and corresponding to (21)

$$\begin{aligned}\Delta \frac{\partial \gamma_I}{\partial t} &= -\frac{\partial}{\partial s_I}\left[\left(v_{T_I} - V_{T_I}\right)\gamma_I\right] - \frac{\gamma_I}{3t} \\ &= -\epsilon \frac{\partial}{\partial s_{II}}\left[\left(v_{T_{II}} - V_{T_{II}}\right)\sqrt{\epsilon}\gamma_{II}\sqrt{\epsilon}\right] - \frac{\gamma_{II}\sqrt{\epsilon}}{3t}\end{aligned}$$

If we, finally, replace in the last term t by $(b/\epsilon)^{3/2}\,\pi/\chi$ (equation (27)), we obtain

$$\Delta \frac{\partial \gamma_I}{\partial t} = -\epsilon^2\left[\frac{\partial}{\partial s_{II}}\left(v_{T_{II}} - V_{T_{II}}\right)\gamma_{II} + \frac{\chi\gamma_{II}}{3\pi b^{3/2}}\right] \tag{30}$$

By graphical integration then results the displacement Δn of the points of the vortex sheet at right angles to it, and the modification of the distribution density compared to the similar magnification in the plane I as

$$\Delta n_I = \int_{t_1}^{t_2} \Delta v_{n_I} dt \tag{31}$$

$$\Delta \gamma_I = \int_{t_1}^{t_2} \Delta\left(\frac{\partial \gamma_I}{\partial t}\right) dt \tag{32}$$

and the modification of form and distribution density in the plane II as

$$\Delta n_{II} = \epsilon_2 \Delta n_I \tag{33}$$

$$\Delta \gamma_{II} = \frac{1}{\sqrt{\epsilon_2}} \Delta \gamma_I \tag{34}$$

Therein ϵ_2 is the value of the magnification ratio ϵ at the time t_2.

Due to the finite magnitude of the vortices compared with the plate width, $\Delta v_{n_{II}} \neq 0$ and $\Delta \frac{\partial \gamma_{II}}{\partial t} \neq 0$; also, the condition (4), that in the ζ-plane at the zero point the velocity must be zero, will no longer be satisfied. In the ascertainment of the vortex for the plate of infinite width we have been able to fulfill this condition by suitable definition of an as yet undetermined factor for the circulation. Due to this condition we found the quantity χ or k, respectively. For the further development of the vortex, form and vortex strength and their variation with time are fixed. Only the strength of the vortices shed at the plate edge is still undetermined since we can here not form the differential quotient $\partial/\partial s$ occurring in (30). We must select it in such a manner that equation (4) is satisfied. We obtain therefore an additional modification of the distribution density starting from the plate edge which gradually is carried into the vortex by the flow. It

is true that it was shown in the quantitative calculation that the deviations from the condition (4) are extremely small, because the variation of the conformal representation [(1)] with ϵ results in a positive velocity, whereas the modification of the form and distribution density according to (33) and (34) results in a negative velocity at the point $\zeta = 0$ and the two almost cancel one another.

The calculation was carried out for the intervals $\epsilon = \infty$ to $\epsilon = 3$, $\epsilon = 3$ to $\epsilon = 2$, and $\epsilon = 2$ to $\epsilon = 1$. The results are compiled in the figures 16 to 19. True to expectation, the circulation Γ increases more slowly with time than it does according to the solution for the plate of infinite width (initial state, fig. 19). In the final state it would perhaps approach a constant value which corresponds to a steady state of flow. However, according to experience the symmetrical vortex configuration becomes unstable from a certain magnitude onward, so that this steady state is not attained.

5. SUMMARY

The flow about the plate of infinite width may be represented as a potential flow with discontinuity surfaces which extend from the plate edges. For prescribed form and vortex distribution of the discontinuity surfaces, the velocity field may be calculated by means of a conformal representation. One condition is that the velocity at the plate edges must be finite. However, it is not sufficient for determination of the form and vortex distribution of the surface. However, on the basis of a similitude requirement one succeeds in finding a solution of this problem for the plate of infinite width which is correct for the very beginning of the motion of the fluid. Starting from this solution, the further development of the vortex distribution and shape of the surface are observed in the case of a plate of finite width.

Finally, I should like to express my special gratitude to Professor Betz for his suggestion of this investigation and his active support in carrying it out.

Translated by Mary L. Mahler
National Advisory Committee
for Aeronautics

REFERENCES

1. Wagner, H.: Z. angew. Math. Mech. 5, 1925, p. 17.

2. Prandtl, L.: Über die Entstehung von Wirbeln in der idealen Flüssigkeit, mit Anwendung auf die Tragflügeltheorie und andere Aufgaben. Vorträge aus dem Gebiete der Hydro- und Aerodynamik, Innsbruck 1922, p. 18.

3. Kaden, H.: Ing.-Arch. 2, 1931, p. 140.

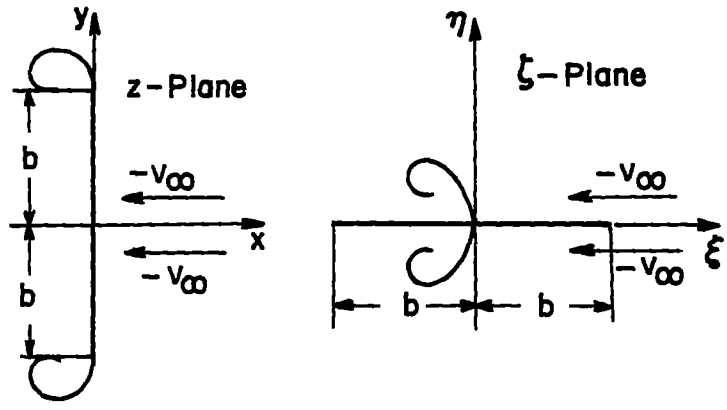

Figure 1.- Plate with vortex sheets starting from the edges (left), and conformal representation of the flow (right).

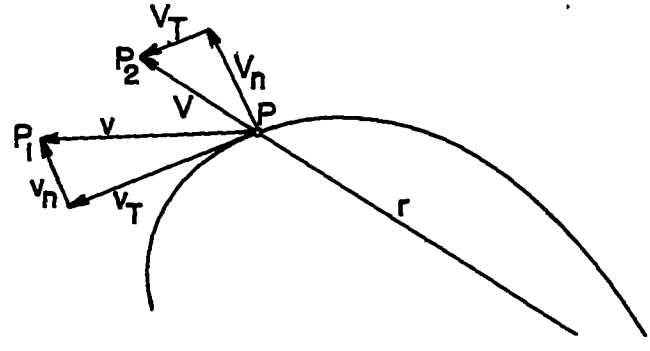

Figure 2.- Actual velocity v of a fluid particle and displacement velocity V corresponding to the similar magnification.

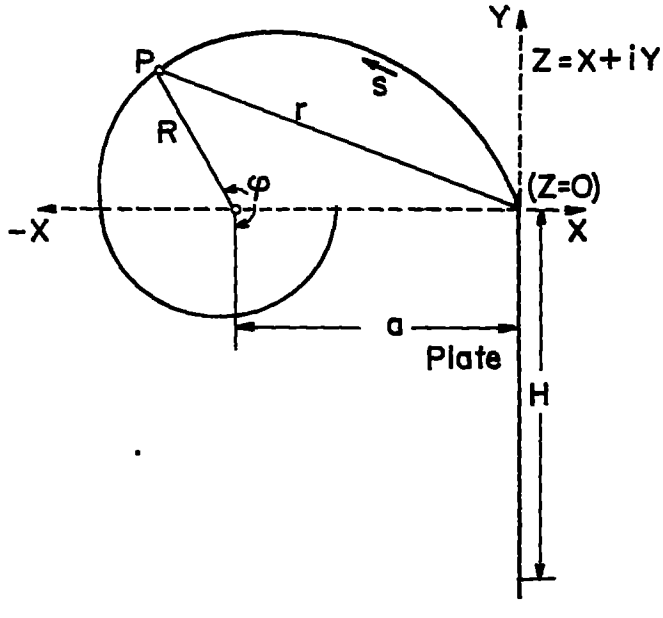

Figure 3.- Spiral according to the equation $R = H/\varphi^{2/3}$.

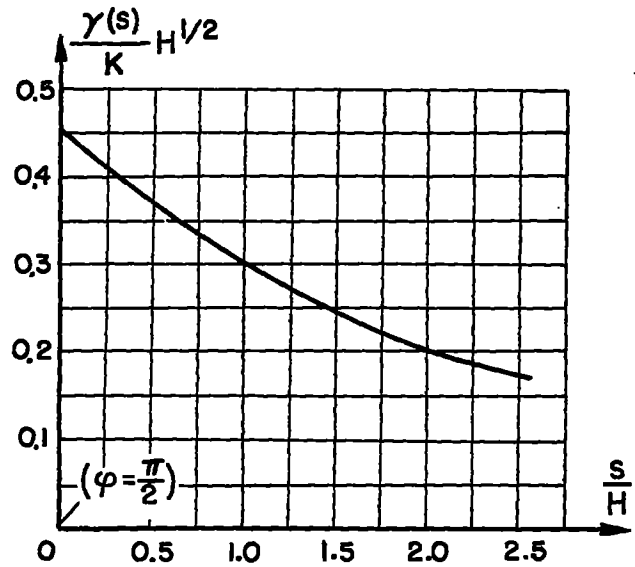

Figure 4.- Distribution density for the region $\pi/2 = \varphi = 2.5\pi$ pertaining to the spiral $R = H/\varphi^{2/3}$.

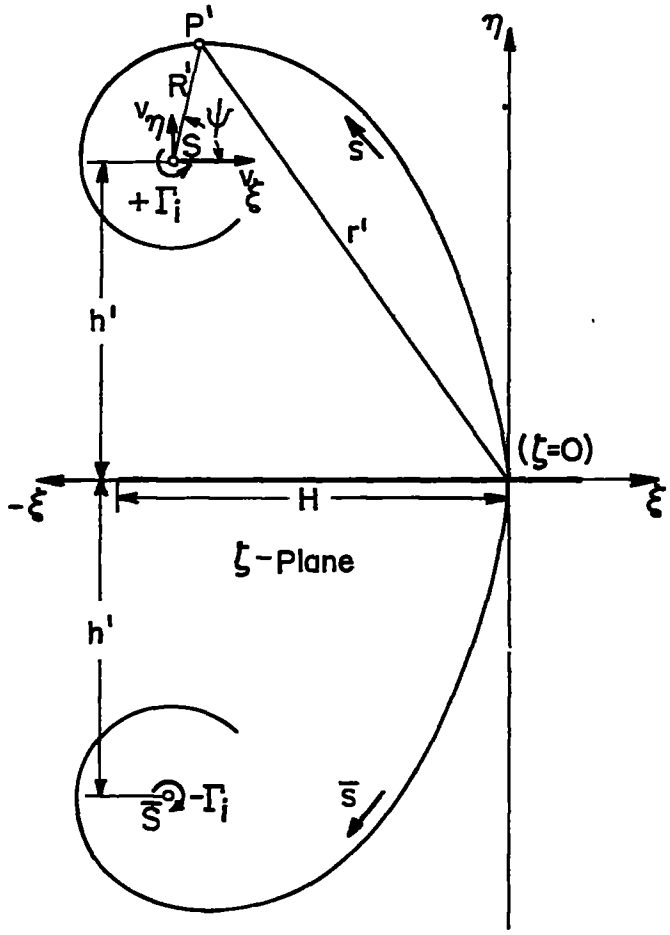

Figure 5.- The spiral and its image in the ζ-plane.

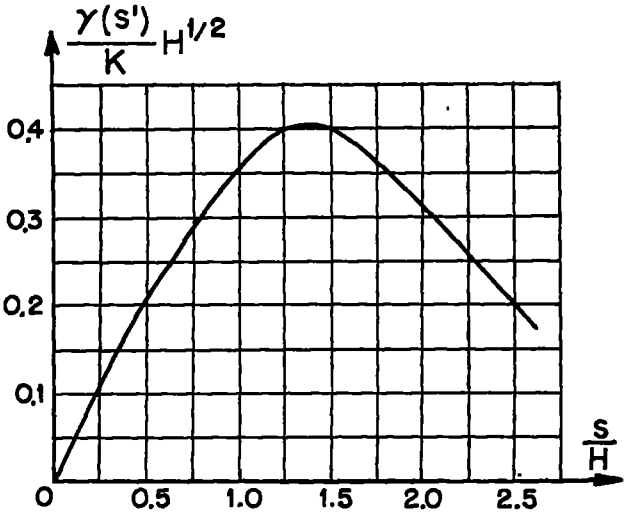

Figure 6.- Distribution density $\gamma(s')$ of the spiral in the ζ-plane.

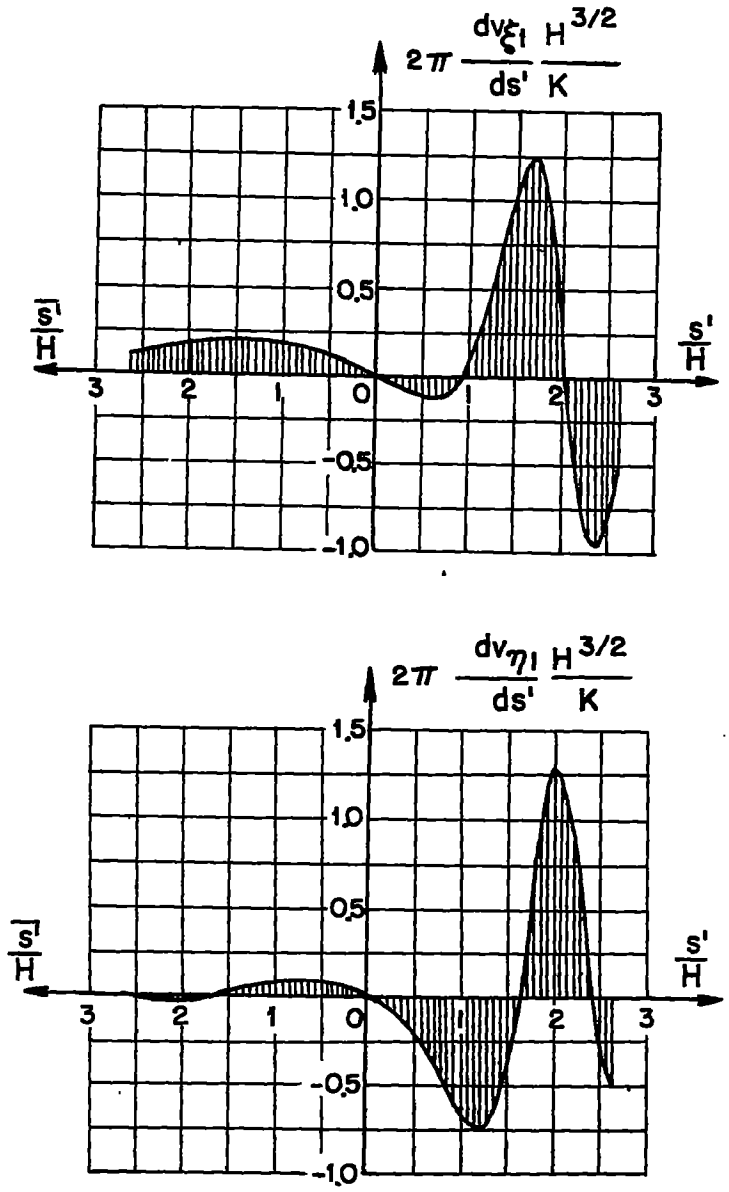

Figure 7.- Influence of the distribution on the velocity components v_ξ and v_η of the vortex center of gravity.

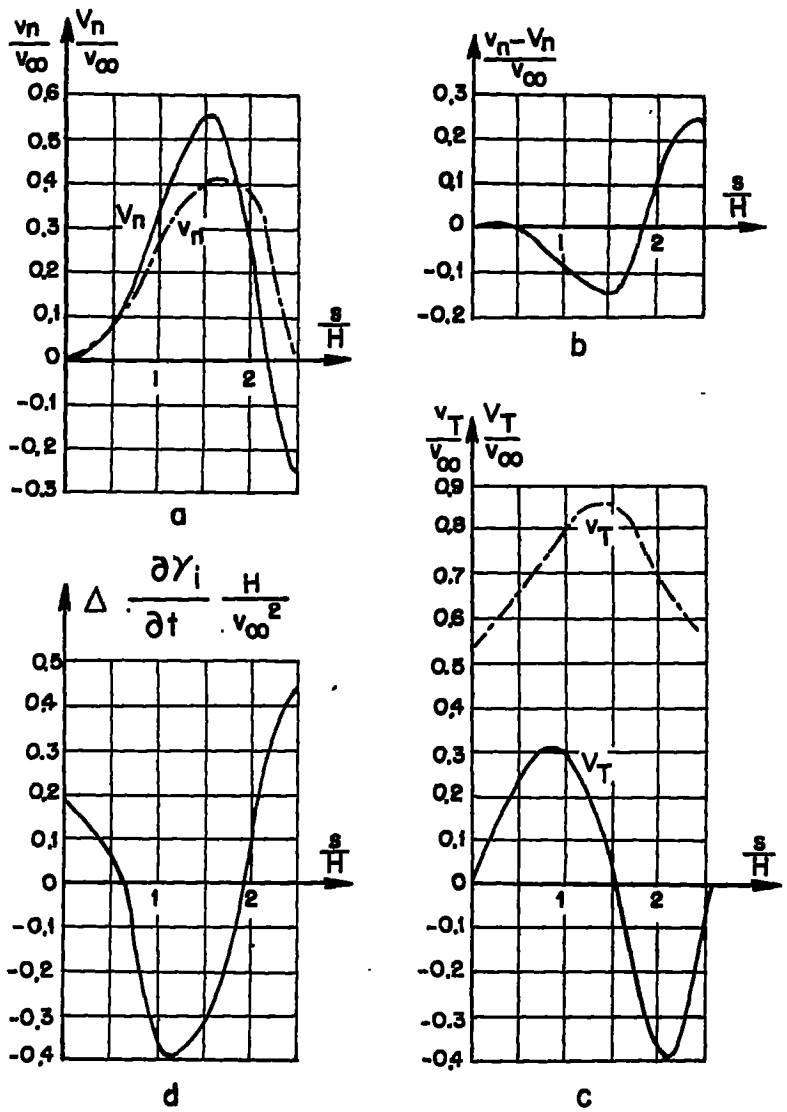

Figure 8.- The quantities which are decisive for the variation of form and distribution density for the initial spiral.

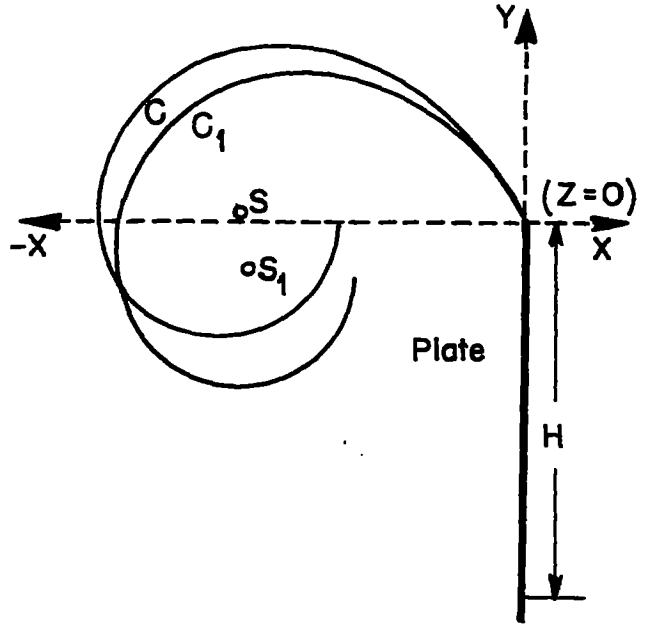

Figure 9.- First correction of the form.

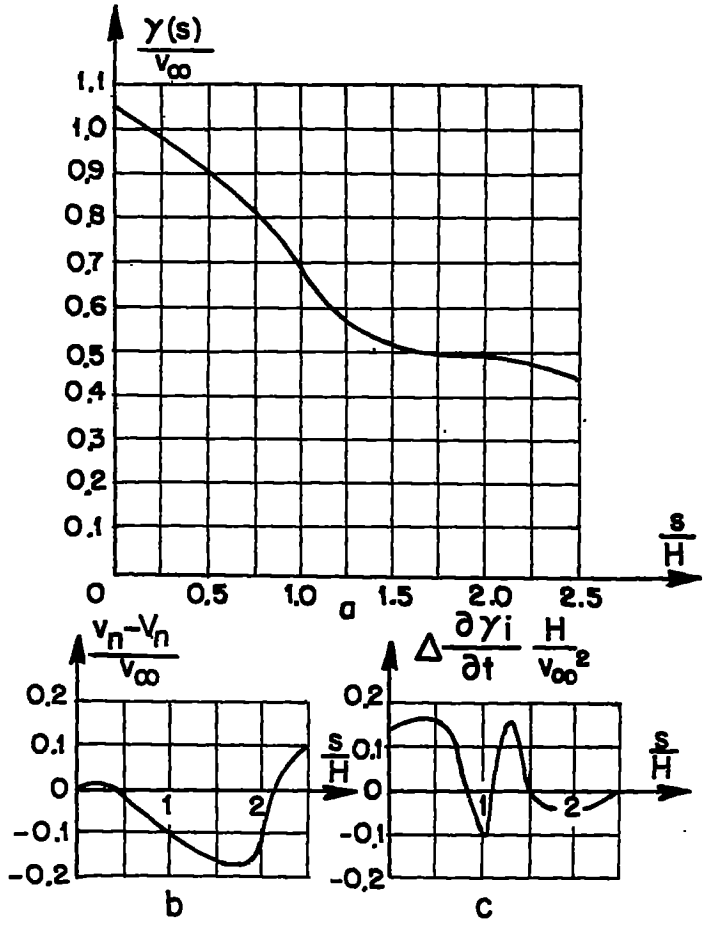

Figure 10.- Distribution density and decisive quantities after the first correction.

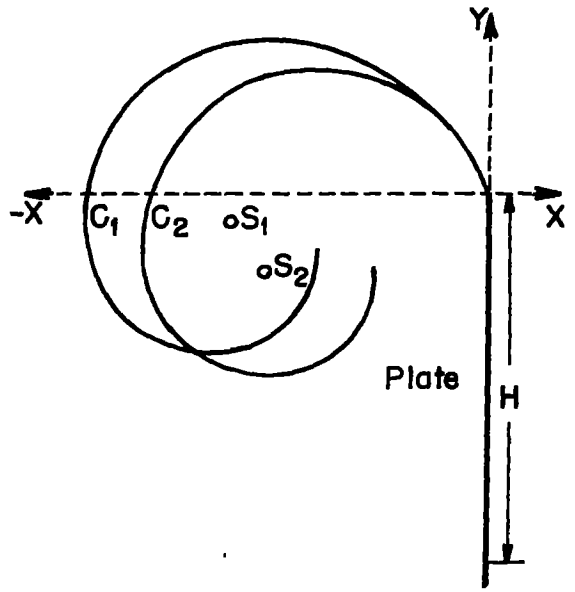

Figure 11.- Second correction of the form.

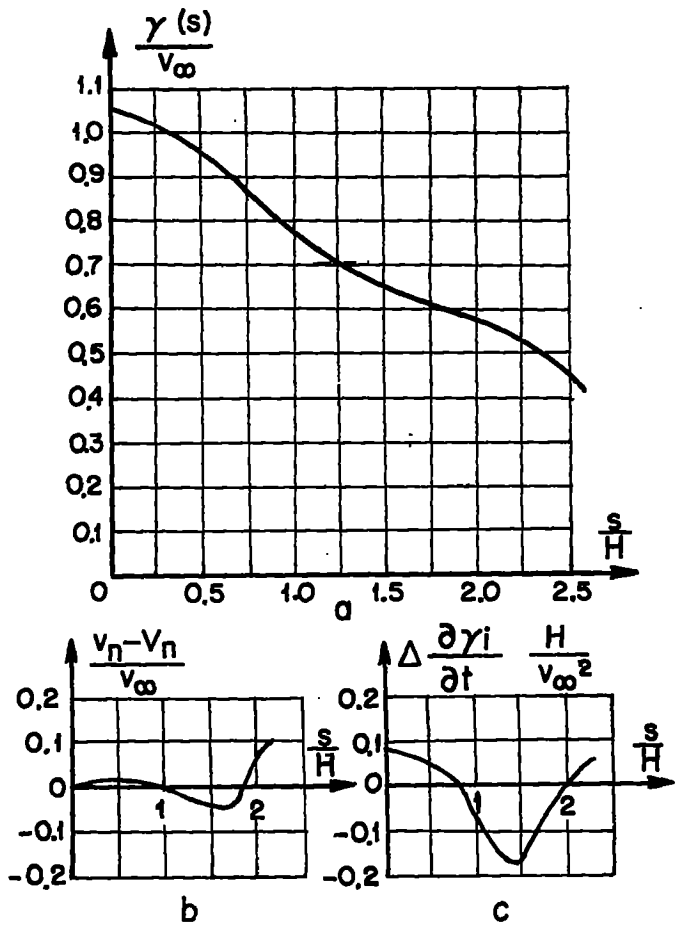

Figure 12.- Distribution density and decisive quantities after the second correction.

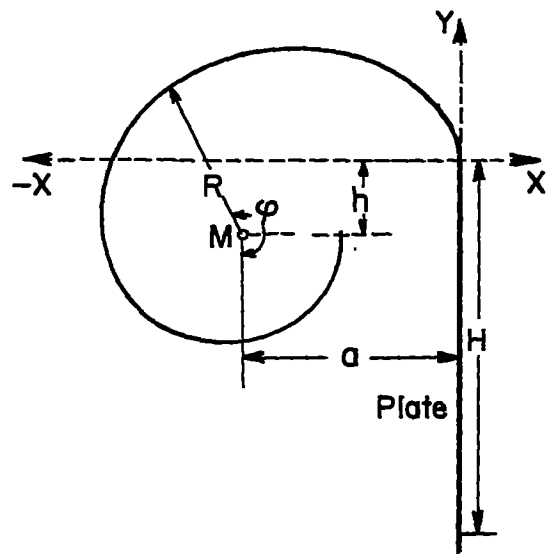

Figure 13.- Final form of the spiral for the plate of infinite width.

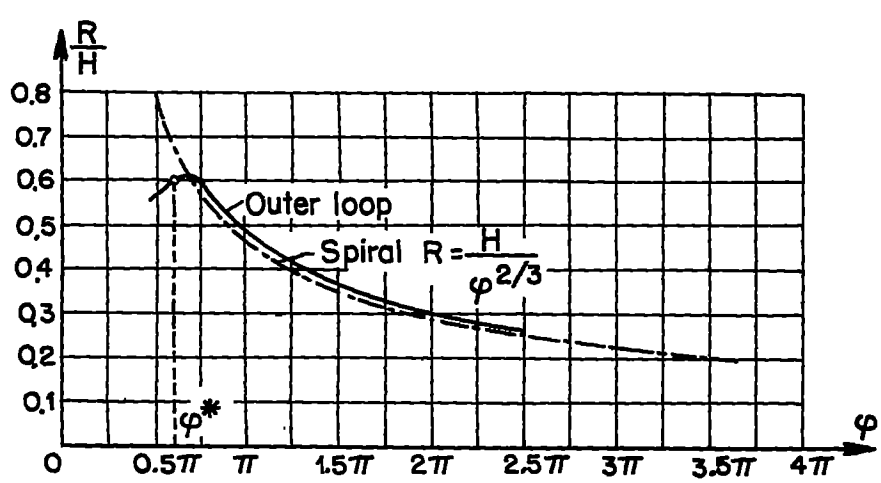

Figure 14.- Relation between the radius R and the angle φ for the final form and for the initial spiral.

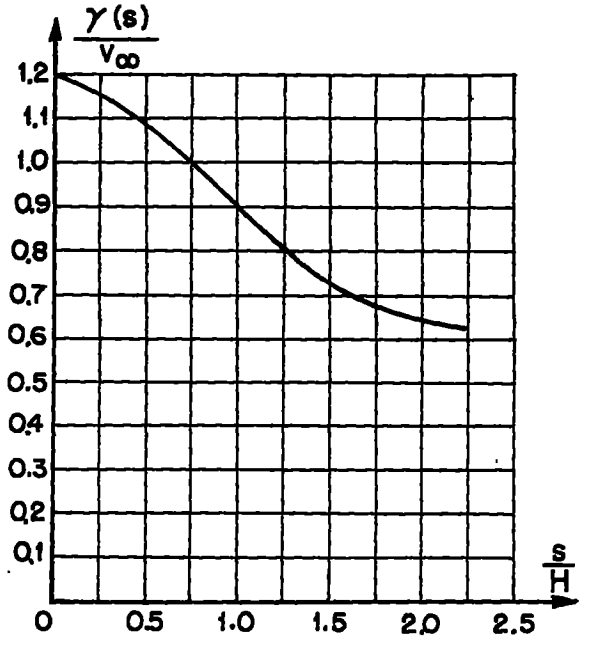

Figure 15.- Final distribution density in the case of the plate of infinite width.

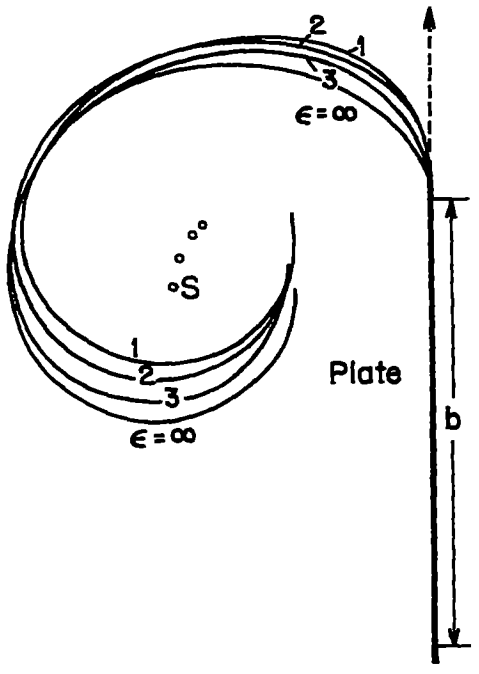

Figure 16.- Variation of the form of the spiral with time in the case of the plate of finite width (reduced to constant vortex magnitude).

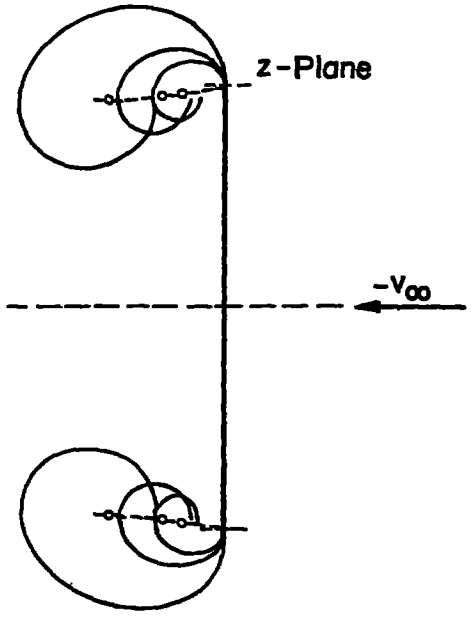

Figure 17.- Variation of the form of the spiral with time in the case of the plate of finite width (actual scale).

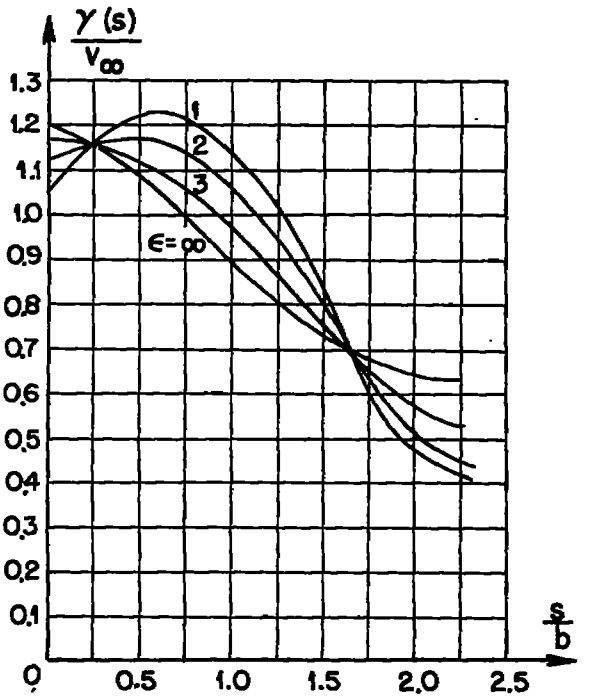

Figure 18.- Variation of the distribution density with time.

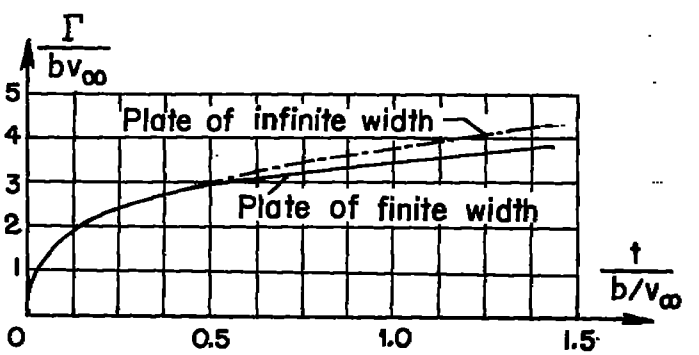

Figure 19.- Growth of the circulation with time.