NACA TM 1423

TECH LIBRARY KAFB, NM
0144574

NATIONAL ADVISORY COMMITTEE FOR AERONAUTICS

TECHNICAL MEMORANDUM 1423

7973

SAFEGUARDS AGAINST FLUTTER OF AIRPLANES

By Gerhard De Vries

Translation of "Précautions a prendre pour éviter les vibrations aérodynamiques des avions." [1. Voilure], La Recherche Aéronautique, no. 12, 1949. [2. Empennages], La Recherche Aéronautique, no 13, 1950.

Washington
August 1956

AFMDC
TECHNICAL LIBRARY
AFL 2811

TECH LIBRARY KAFB, NM
0144574

NATIONAL ADVISORY COMMITTEE FOR AERONAUTICS

TECHNICAL MEMORANDUM 1423

SAFEGUARDS AGAINST FLUTTER OF AIRPLANES*

By Gerhard De Vries

SUMMARY

This report is a compilation of practical rules, derived at the same time from theory and from experience, intended to guide the aeronautical engineer in the design of flutter-free airplanes. Rules applicable to the wing, the ailerons, the flaps, tabs, tail surfaces, and fuselage are discussed successively. Five appendixes complete this report.

PREFACE

An infallible method for avoiding flutter would consist in making the structure very rigid (for instance, twice as rigid as it would be made according to static calculations) and in perfectly balancing the control surfaces. However, an airplane conceived along these basic lines obviously would not be feasible. One must look for compromises; certainly flutter must be avoided, but just barely avoided, without adding weight.

The purpose of this paper is to provide the designer with a set of compromises derived from experience and suitable for enabling him to avoid errors without loss of desirable qualities.

The author stresses particularly all questions concerning the movable members because in these cases the solution is so simple that application of the elementary rules may a priori avoid any error. However, one must not lose sight of the fact that the most dangerous cases of flutter are those which concern the natural modes of the tail for which the only rules are practically: high rigidity, weight toward the front.

---

*"Précautions a prendre pour éviter les vibrations aérodynamiques des avions." [1. Voilure], La Recherche Aéronautique, no. 12, 1949, pp. 15-30. [2. Empennages], La Recherche Aéronautique, no. 13, 1950, pp. 27-43.

Editor's note: Since this paper was originally published in two parts, the parts have been slightly rearranged to provide continuity for the present publication.

Finally, we point out that the lack in experience regarding supersonic airplanes does, so far, not allow exact conclusions in that domain.

R. Basile
Head of the "Vibrations" Section

INTRODUCTION

The problem of flutter of airplanes has arisen ever since the first world war. Since then, theoretical study and experimental research have thrown light on the causes of the phenomenon, as shown by the numerous reports published on this subject. Thus it is completely unnecessary to expound here anew a subject our readers are already familiar with; but having the desire to furnish to the designer the means of safeguarding the airplane against flutter, we shall formulate as far as possible a certain number of practical rules which can be utilized for the design of the machine. Adhering strictly to these rules, one would be ensured with certainty against any eventuality of flutter; however, in the majority of cases there is, unfortunately, reason for fear that a complete application of these rules will prove impossible because the machine must satisfy multiple requirements and its construction will, as always, be the outcome of many compromises. For this reason, we shall examine in the following sections the different means for avoiding flutter as much from the viewpoint of their specific effectiveness as from those of weight and of price.

Nevertheless, the study of the vibrations of an airplane requires knowledge of a certain number of parameters such as: position of the elastic axis, frequencies on the ground, etc., which can doubtlessly be calculated from the layout; but this type of procedure - which is, basically, nothing but an iteration method - leads to results only at the price of considerable work.

The tests furnish easily the necessary parameters of the problem but they can be performed only after the machine has been finished.

Thus, there remains as the only method, to combine the theoretical studies, the utilization of the rules dictated by practice, and the experimental verifications, in order to arrive at the desired goal.

This will be the method we shall follow in this paper.

The rules contained in it are applicable in their entirety to airplanes of conventional form. As to airplanes of unconventional configuration, there can be no doubt that a large part of these same rules is applicable to them as well; but in the absence of sufficiently numerous

experimental results one could in that case not make use of the conclusions of this report without reservation.

Efforts have been made at coordinating the rules for elimination of the danger of flutter which have been set up so far in various countries. In a comparison of documents, one finds that one may approach the problem in two ways, according to whether one considers it as a problem of static (or quasi-static) stability, or as a problem of self-sustained vibrations.

In England, preference for the static point of view prevailed for a long time. In America and in Germany, in contrast, as also in Russia, one is mostly concerned with the vibrations, that is to say, one studies first the natural vibrations of the machine on the ground and corrects them afterwards in order to take the aerodynamic forces into account. The fact that the English have modified their original view point and at present also require ground tests, certainly confirms the concept that the study of the vibrations is at the center of the flutter problem; the present report, too, defends throughout this thesis.

Other differences also exist between the regulations of the various countries. Whereas the English and the Americans extend their regulations to include very small construction details, the Germans left much more latitude to their designers, but required, in all cases, flight tests for proving the correct behavior of the airplane. This, of course, made it necessary for the manufacturers to possess all the apparatus required for ground and for flight tests and to secure for themselves the services of engineers specializing in vibration problems. Actually, these specialized teams were well distributed throughout the German aeronautical factories everywhere; this presented certain advantages over too rigorous regulations since the forms and procedures of construction for modern airplanes develop constantly and regulatory standards become, for that reason, continually obsolete.

We shall therefore attempt to extract from the various regulations in force the rules held to be most essential, combining with them our personal experience of the most recent years. We apologize beforehand when our conclusions sometimes run against the English concepts which form the basis of the provisional French regulations[1]. At any rate, we recommend that the airplane manufacturer should, in dubious cases, consult a specialist and submit his opinions to the qualified department that has to make the decision. It should be fully understood that this report gives advice and makes suggestions but cannot assume responsibilities which belong, in the final analysis, only to the airplane manufacturer.

---

[1]Note on the conditions to be imposed on airplanes for avoiding aerodynamic vibrations, June 1946.

1. WING UNIT

The self-sustained vibrations of a wing under the influence of the aerodynamic forces are made possible by the deformations or displacements enumerated below, which constitute as many "degrees of freedom" of the wing. (See appendix I.)

(a) Bending of the wing
(b) Torsion of the wing
(c) Rotation of the ailerons
(d) Rotation of the aileron tabs
(e) Rotation of the high-lift flaps

The conventional flutter requires the association of at least two degrees of freedom. The bending-torsion flutter, very frequent in the past on airplanes with fabric-covered wings, has become much rarer on airplanes with metal wing covering. But the danger of flutter still remains, principally because of the ailerons and the tabs. We shall carefully examine these cases.

1.1. Wing

1.11. Bending rigidity.- Theory shows that the influence of the bending rigidity on the critical speed is slight, and experience confirms the theory regarding this point. Since it is hardly permissible for the designer to modify the dimensions imposed on him by the calculations of drag, he will be able to neglect, without inconvenience, the bending rigidity in the prevention of flutter.

1.12. Torsional rigidity.- In contrast to bending rigidity, the torsional rigidity is of fundamental importance. One should provide for the highest possible degree of it, the more so, as a subsequent reinforcement is generally not feasible.

In order to obtain sufficient rigidity, it is necessary to:

Avoid, as far as possible, discontinuities in the covering of the wing (placement of the landing-gear openings, of the power plants, of the wing gasoline tanks, etc.) or avoid at least that the cutouts made in this manner diminish the torsional rigidity (reinforcement of the edges).

Prefer, as far as possible, the tubular-spar, box-spar constructions or any other form of monocoque construction to independent-spar constructions. Furthermore, it is preferable not to interrupt the spars at right angles to the fuselage to avoid a decrease in rigidity of the attachment structure.

1.13. Numerical Values.- For the determination of the critical speed, the torsional frequency (which itself is a function of the torsional rigidity) is the predominant factor. Let us examine some numerical values: figure 1 shows the bending and torsional frequencies as functions of the semispan in about 20 German machines as well as in eight recently studied French machines. One notices two types of curves, one pertaining to the obsolete two-spar constructions, the other to modern machines of monocoque constructions. These latter are the ones that are of special interest to us.

We also plotted two curves taken from the American regulations; they express the experimental values found for American machines (ref. 3). While the curve of the bending frequencies coincides quite well with ours, the curves of the torsional frequencies lie distinctly above ours. Does that mean that the Americans try more than the Europeans to achieve wings more rigid in torsion? This is possible, but perhaps we deal here with a curve drawn solely with values pertaining to airplanes intended for very high speeds while our curve utilizes the data of machines of every category.

Figure 2 presents the elements of figure 1 in another form. It expresses the bending and the torsional frequency as functions of the semispan for various speeds (equivalent velocity) of the airplane. These curves therefore enable the designer to make a first check as soon as he has estimated the speed of his machine. However, this presupposes that he also knows the frequencies of his machine which, in the design stage, can be obtained only at the price of tiresome calculations. But an at least approximate value of the frequency may be calculated from the measurements made on other machines of the same firm, if, as frequently happens, this firm has established a traditional type of construction.

Between the torsional frequencies of two machines of the same type there exists, in fact, the following relationship:

$$n_2/n_1 = \left(l_1/l_2\right)\left(i_1/i_2\right)$$

but the empirical curve of figure 1 gives also

$$n_2/n_1 \doteq \left(l_1/l_2\right)^{0.8}$$

l_1 and l_2 are the radii of gyration, and i_1 and i_2 the semispans.

The second relation is explained by the fact that the aspect ratio generally increases with the span.

For two machines of the same type, it will therefore be possible to calculate the frequency ratio from the ratio of the semispans and from the ratio of the radii of gyration; the latter are, besides, reasonably proportional to the wing chord.

The American regulations do not limit themselves to furnishing the two curves we have shown in figure 1, but indicate also the torsional rigidity the wing must have, in different sections, as a function of the calculated speed of the machine. These indications are open to criticism at least in that they concern only sections situated toward the wing tip whereas the rigidity near the wing root is more important in the study of flutter. Nevertheless one will find the requirements of the American regulations reproduced in figure 3.

The English regulations (ref. 2) appear more logical. They are expressed by the formula

$$C_0 = \frac{\beta^2 V^2 d c^2}{\sqrt{1 - M^2}}$$

valid for a Mach number $M \leqq 0.8$. In this formula

C_0 torsional rigidity

d reduced distance from the wing root to the wing tip (the latter being at 0.9 of the semispan of the complete airplane)

c mean chord of the complete wing (without deduction of the wing portion in the fuselage)

V is the equivalent of ground velocity

β finally, is a number called criterion which will be defined later: β has the dimensions of a specific mass.

It must be remarked here that what is called torsional rigidity has different meanings in American and in English or French documents.

In the American meaning, C_{TR}, the symbol for the torsional rigidity of the wing, has the dimensions of a force divided by a length squared. In fact, by definition

$$C_{TR} = M\frac{dl}{d\theta}$$

where M is a torsional moment and $\frac{dl}{d\theta}$ the slope of the curve of the corresponding deformation.

In the English as well as in the French meaning, in contrast, C_0 is a torsional moment (per radian) and, consequently, has the dimensions of a force divided by a length.

To come back to the criterion β: its value depends on the parameter

$$\sigma = \frac{Pv_1 + KPv_2}{S_1 C_1}$$

where S_1 is a certain portion of the wing area (different according to the regulations, see fig. 4).

C_1 geometrical mean chord of the area S_1

Pv_1 fixed structural weight of the area S_1

Pv_2 variable weights situated in the portion of the wing of area S_1

K a coefficient (generally $K = 0.5$)

One may remark with regard to these rules that the flutter depends on a great many parameters other than those which appear in the above formulas; hence, verification of these formulas does by no means suffice for guaranteeing security. On the other hand, an airplane may be free of flutter although it does not verify the formulas. What is therefore the significance of these regulatory rules? Two answers are possible:

(a) They represent single recommendations.
(b) They are a standard for the certification of structures as it will be carried out by the proper official agency.

However, these rules are too precise to constitute only recommendations. As to the certification of the machine: since at present the official agencies require ground as well as flight tests, the experimental results will obviously prevail, in anyone's opinion, over the employment of a formula.

We shall therefore advise the designer to consider these rules as guiding principles without letting himself be too closely bound by them.

1.14. Distribution of masses.- The aerodynamic loads impose on the designers the dimensions of the structure and thereby a certain rigidity of the machine. Any increase in rigidity necessary for avoiding flutter will be accompanied by an increase in weight. However, frequently a judicious distribution of masses, without increase, will give the same result.

The essential rule from this viewpoint - as far as the construction of the wing is concerned - is to place, as far as possible, the entire weight toward the front.

The effectiveness of this rule increases, besides, in proportion as one approaches the wing tip. The effect of the masses actually remains negligible as long as their distance from the fuselage is less than 15 percent of the semispan; this effect varies, in fact, as $(y/l)^n$ where y is the ordinate of the mass along the transverse axis, l the length of the semispan, and n an exponent which takes on values ranging between 1.5 and 2 according to the form of the vibration. (See fig. 5.)

On the other hand, one must distinguish between the masses fixed or rigidly connected to the wing and the removable masses such as, for instance, the detachable gas tanks, the bombs and the bomb releases, and, of course, the gasoline contained in the tanks. One will be careful to avoid a rearward displacement of the center of gravity as a result of an eventual variation in weight of the wing; such a displacement would cause a lowering of the critical speed. Thus the detachable masses will be placed behind the fixed masses, but both, as far as possible, toward the front. (See appendix IV.)

As regards the moment of inertia, the theory indicates that the square of the frequency is inversely proportional to it; one has therefore every reason to reduce it as much as possible, and this is in accordance with the rule stated above that the masses should be placed forward (in order to reduce the coupling term since, generally, the elastic axis of the wing will be found at the front). Besides, even though it is not always possible to reduce the moments of inertia and to avoid the couplings, it will be possible to lessen the unfavorable effects (from the viewpoint of flutter) of certain masses by attaching them to the wing by an elastic device. We shall give an example:

Figure 6(a) shows a bomb fixed below the wing of an airplane. It is situated toward the front which is favorable but its presence increases considerably the inertia of the section where it is attached. This does not necessarily cause a lowering of the critical speed but in certain cases the calculations could indicate that it is favorable to diminish the inertia. It is quite impossible to modify the weight of the bomb but one will be able to resort to attaching it elastically to the wing in such a manner that it has a natural frequency considerably lower than the torsional frequency of the wing. Since in the case we are dealing with the

main objective is to avoid torsional flutter, it will be feasible to connect the bomb to the wing by a rigid link, placed approximately vertically in line with its center of gravity, and one or two elastic links of convenient rigidity, intended to oppose the rotation of the bomb. Another solution, preferable to the previous one, will consist in fixing the bomb to the wing by a rigid connection in front and an elastic one at the rear (fig. 6(b)).

At any rate, even if the calculation indicates that the frequency of the bomb lowers the critical speed, it will be advisable to wait until the airplane is built and to proceed then to an experimental verification of the linkages; the latter are, in fact, frequently rather flexible although the hypotheses of the calculation assumed them to be rigid. The final result thus will possibly be less unfavorable than one was led to fear by the theoretical calculation.

Another example of the displacement forward of the center of gravity is given by the attachment of fuel tanks at the wing tips (fig. 7).

1.2. Aileron

The aileron is one of the predominant elements of flutter. Even though it is relatively easy to modify or to change a faulty aileron, one will save time, work, and money if one bears, for the design of this element, the following two rules in mind:

(1) Sufficient bending and torsional rigidity
(2) Balancing

The first rule is already enforced, at least partially, by the flying qualities. The second, in contrast, is resorted to only for the prevention of flutter. In all cases, the balancing will require the addition of weights which will vary according to the type of construction of the aileron.

1.21. Balancing by external masses.- Let us say first a word about this type of balancing rather favored before the war, which consisted in arranging outside of the profile one of several "club-shaped" masses, in obvious defiance of all laws of aerodynamics.

If one evaluates this type of balancing, one will note in its favor that it is economical with respect to weight because:

(1) It offers the possibility of utilizing a rather long lever arm, thus a rather light counterweight, for achieving static equilibrium.

(2) Even in the case where the dynamic equilibrium is achieved, this system may permit a significant saving in weight. (See appendix III.)

To its disadvantage, one has to point out:

(1) The increase in drag (which one can lessen, however, with certain types of counterweight, see fig. 8 and appendix V)

(2) The more complicated construction

(3) The danger of icing (which may likewise be lessened by an appropriate design of the counterweight, fig. 8(d)).

1.22. Balanced construction.- If one designs an aileron whose structural weights are distributed in such a manner that it is in equilibrium about its hinge axis, that aileron will probably have more than enough static strength. Nevertheless, it will be lighter than the ensemble consisting of an aileron "without margin" from the viewpoint of static strength and of its balancing counterweight. In addition, the excessive strength will express itself in an additional rigidity which is still acceptable even though it is itself excessive with regard to the imposed minimum; a concentrated balancing mass could not do this.

In practice it will therefore be advisable to design the aileron as follows (fig. 9): a leading edge sufficiently heavy for ensuring balancing and resistance to the bending and torsional forces; ribs as light as possible set into that leading edge; a light covering (outside the region of the leading edge). Since it is very difficult to avoid cutting the leading edge at right angles to the aileron supports, it will be desirable to reinforce them at these points.

Such a construction gives:

(1) The center of gravity situated close to the hinge axis which therefore requires only a small increase in weight in order to achieve balance

(2) A concentration of the most important masses around the axis and hence a small moment of inertia. (See, however, the exception indicated at the end of section 1.25.)

(3) An additional bending and torsional rigidity

(4) A low total weight

(5) The possibility of fixing the controls at any arbitrary point of the leading edge, owing to the high rigidity of the latter[2].

[2]The rigidity of the leading edge permits fixing the balancing masses on it in the advantageous practical manner used in certain airplanes (fig. 9(a)).

We shall finally note, however, that it is always of interest to explore the possibility of adding some concentrated masses in order to perfect balance after the machine had been completed, especially where a prototype is concerned.

1.23. Horizontal balancing.- There exist ailerons the hinge axis of which is displaced in height (generally downward) with respect to the horizontal plane passing through the center of gravity. Must one then balance it in such a manner that the center of gravity is brought back to the level of the axis?

Experience proves that one can in many cases manage without this additional balancing which one can hardly ever accomplish without resorting to external masses. Regarding this subject one will make a decision, if need be, only after the vibration test.

One may say a priori that balancing in height is almost always unnecessary for rigid airplanes the wings of which are conventionally comparable to a plane surface. But for an airplane the wing of which has a break (a rather frequent case in seaplanes, see fig. 10), total balance is often necessary because the twisting of the wing is accompanied by horizontal vibrations, thus causing relative motions of the aileron not balanced horizontally.

1.24. General remarks and numerical data concerning balancing.- In all cases one will note that:

(1) For a wing of sufficiently high torsional rigidity, the balancing of the aileron aims only at preventing flutter with two degrees of freedom: bending of the wing - rotation of the aileron. In this case a single mass will always be sufficient to obtain the desired equilibrium.

(2) For very fast airplanes, the wing torsion of which cannot be neglected, the single mass will not be sufficient. In fact, in this case the nodal line may pass through the point of attachment of the aileron with the balancing mass which, consequently, does no longer play any role.

For calculating the balancing:

(1) The American regulations introduce the dimensionless coefficient K/I:

I is the moment of inertia of the aileron with respect to the hinge axis, and its calculation from the design drawings does not offer any difficulties.

K is the product of inertia of the same aileron with respect to two axes, one of which is again the hinge axis while the other is the axis of oscillation of the wing in the course of the flutter. (The calculation of K forms the object of appendix II.) Knowledge of the latter may be obtained practically only by test. One will deal with this difficulty, in the course of the preliminary study, by assuming simplified deformations of the wing, for instance, a rotation of the wing around its root as if deformed by bending, and neglecting the torsional deformation; the value for the counterweight found in this case will, by the way, be excessive. As to the values to be verified by the ratio K/I, they may be found in the diagrams presented in this report (figs. 11 and 12). In the American recommendations (ref. 3), one finds also the following formula for speeds below 480 km/h:

$$K/I = 0.20\left[6 - \left(\frac{V_m}{240}\right)^2\right]$$

where V_m is equivalent to the diving speed in km/h. Since figure 12 uses the frequency of the aileron, the calculation will be based solely on the values of diagram 11; however, it will be prudent to anticipate that one could arrive finally, after measurement of the frequency, at a higher counterweight than the one calculated from the indications of figure 11. Another solution is to modify then the rigidity of the control surface, but this is, generally, difficult.

(2) The English and German regulations require a strict balancing, apart from any consideration of frequency or of speed. One may say that this requirement is too severe; however, it has the advantage of offering a guaranty against flutter at low speeds, but this security is obtained at the price of an increase in total weight.

(3) The French regulations in turn set up the requirement of strict balancing, considering it satisfied if for any aileron deflection between $\pm 10^\circ$ the following two conditions are satisfied:

(a) The product of inertia Σmxy for extreme positioning AR of the aileron must be zero or negative.

(b) The extreme-centroid AV must not be more than 15 percent of the mean aileron chord measured behind the hinge axis for airplanes with a speed V_1 lower than 240 km/h, and not more than 5 percent for those with a speed V_1 higher than that value.

As for the axes of the coordinates x and y used for the calculation of the product of inertia (see appendix II), they are the hinge axis and the chord of the supporting profile. Nevertheless, if there exists between the supporting structure and the aileron a profile of high rigidity in torsion (an attachment by struts, for instance), one should substitute the chord of this profile for that of the wing-root profile.

We conclude by repeating that, without any doubt, perfect balance is necessary in high-speed machines. In exceptional cases, we recommend that the designer consult the appropriate official agency, for instance, when large machines at low speeds are concerned, and especially in the case of ailerons, the hinge axis of which is situated outside of the plane of symmetry, that is to say, in the case of balancing in two directions.

The aileron must be put in equilibrium without forgetting the tabs, the controls, or even the layers of paint.

It is well to provide for an overbalancing[3] of about 10 percent for guarding against an increase of the weights at the rear, in consequence of repairs or maintenance work (painting), during utilization of the machine.

This margin of 10 percent has been adopted systematically a priori by the German designers since experience proved that such a margin did practically not lower the critical speed - except in certain cases if the aileron frequency is very close to the torsional frequency of the wing.

1.25. Rigidity - design of the aileron.- Experience indicates that the fundamental torsional frequency of the aileron and the rotational frequency resulting from the elasticity of the controls must be higher than the torsional frequency of the wing.

This depends:

(a) On the torsional rigidity of the aileron.
(b) On the number of control linkages and on their rigidity.
(c) On the distribution of masses, chiefly the concentrated masses (moment of inertia).

The French regulations - following the English regulations on this point - give the following criterion for the torsional rigidity of the aileron:

$$0.019T_A = R^2{}_A V_1{}^2 b_A C^2{}_A \left(1 - M^2\right)^{-1/2}$$

---

[3]An excess of balancing weight of 10 percent.

T_A torsional rigidity (in m.kg per radian) measured between the two sections of the aileron located at $0.1b_A$ from the extremities

b_A span of the aileron parallel to its hinge axis

C_A mean chord of the aileron area behind the hinge

R_A coefficient of rigidity the minimum values of which are given by figure 13.

da designates, for the ailerons with one single concentrated mass, the farthest distance between this mass and the aileron tip.

For ailerons with two or more concentrated balancing masses, da is the distance between each aileron tip and the adjacent mass or half the maximum distance between two adjacent masses (the largest one of the lengths thus defined).

For the ailerons without balancing mass which have an irreversible or damped control, the distance da is measured with respect to the points of attachment of the control.

However, it should be noted that the question concerned here is the torsional rigidity of the aileron "detached" from its control mechanism. The number and the elasticity of the control linkages obviously exert an influence on the rigidity, likewise the position and size of the concentrated masses. As far as flutter is concerned, one need therefore not attach much importance to the torsional rigidity thus measured. Besides, although this criterion may serve for checking an aileron already built, it is of little use in the design stage.

Let us now say a word about the natural torsional frequency of the aileron and its control linkages. This frequency diminishes when the following three parameters increase:

(a) The distance between the control levers and the balancing masses
(b) The inertia of the aileron
(c) The elasticity of the aileron and especially that of its control mechanism.

One should therefore attempt to counteract these sources of low frequency. In contrast, the increase in the number of control levers is favorable. A certain number of ailerons assumed to be of constant length, inertia, and elasticity have been designed (fig. 14). They differ only by the control levers and the balancing masses. They are arranged in an order to show the growing security they offer against flutter. The last

one has the balancing masses fixed to the control levers themselves; this arrangement is particularly advantageous when horizontal and vertical balancing is desired at the same time. (See fig. 15.)

We remark here that the levers which support the balancing masses may cause lateral vibratory motions liable to produce their fracture due to fatigue if their frequency coincides with that of the engines. This also can become apparent only in tests. It is unnecessary to add that the strength of all the elements of the aileron is a fundamental requirement since the throwing out of equilibrium resulting from a fracture may lead abruptly to flutter, even if the fracture is not very serious from the viewpoint of structural strength.

However, it is chiefly the elasticity of the control mechanism which will effect the rotational frequency of the aileron. In order to achieve an acceptable aileron frequency, the designer will therefore have to choose between the methods indicated above and a modification of the control rigidity.

The control mechanism consists of cables or rods (these latter are generally tubular), of levers, and of torsion tubes. The distribution of rigidity of a control system between its various elements has been figured out (fig. 16). One can see from this example that it is generally more convenient to modify the levers or the torsion tubes rather than the rods.

For the purposes of design, one should distinguish between the elasticity due to the rods and that due to the levers, torsion tubes, etc. The first one is easy to evaluate. As to the second - since generally every manufacturer has a traditional way of designing the controls - measurements made on the existing machines will give the percentage of the total rigidity which it requires.

Having thus obtained knowledge of the total rigidity of the control C and of the inertia of the aileron about its axis I, one will have the frequency

$$V = \frac{60}{2\pi}\sqrt{\frac{C}{I}} \qquad \left[\mathrm{min}^{-1}\right]$$

One will obtain an even more exact value for the rigidity of the controls if, after having calculated it as described above, for a certain number of existing machines, one measures afterwards the effective value.

One will almost always find that the measured elasticity exceeds the calculated elasticity. But these tests will furnish a new coefficient which when introduced into the evaluation of the planned control system

will make it possible to obtain a value very close to the actual one. A very extensive calculation of this frequency is unnecessary except in the case where - as will be explained - one is hesitant because one has to know whether to increase or to reduce the frequency of the aileron.

To aid the designer, we present (fig. 17) two curves; according to measurements made on existing airplanes, one of these curves represents the rotational frequency of the aileron, the other the torsional frequency of the wing; these frequencies are given as functions of the semispan of the wing. One must not be surprised that a certain relationship exists between these frequencies and the span since the construction is determined by the aerodynamic loads.

The basic assumption will be made that the rotational frequency must always be larger than the bending frequency of the wing which does not offer any difficulties, and, as far as possible, distinctly larger than the torsional frequency. From this viewpoint, the case where the two frequencies are close to one another is the most dangerous one; thus, if one cannot hope to exceed the torsional frequency of the wing sufficiently, one does better to stay clearly below it. If n_t designates the torsional frequency of the wing, one will avoid for the aileron quite particularly the range $0.8n_t$ to n_t.

Let us add that the advice just given, valid for airplanes in general, cannot be applied in certain particular cases where the closeness of the two frequencies does not constitute a danger for the machine. However, this can be guaranteed only by an extensive calculation. It is up to the airplane builder to decide in each case of this kind whether the possible difficulty of modification of the aileron justifies undertaking a detailed calculation.

One must interpret the data of figure 17 in the light of these principles. One sees that for the airplanes of small span the rotational frequency of the aileron is clearly lower than the torsional frequency of the wing. One should therefore advise the builder of small airplanes not to pay too much attention to the ailerons beyond giving to them as well as to their control mechanism the rigidity required by the calculations of strength, and to beware of wanting to increase that rigidity, since this would have the effect of bringing the frequency of the aileron dangerously close to that of the wing. One should be careful when the semispan is around 10m. If the wing frequency is high, it is better not to try to exceed it, because one is not sure of succeeding, but rather to stay below it. However, if the wing's torsional vibration is of low frequency, as will be the case for a wing of large span, one must attempt to make the rotational frequency of the aileron as high as possible.

1.3. Flaps

To the present time dangerous flutter of open flaps has not been observed and one may assume that there is little risk if such flutter should originate because deflection of flaps is used only at moderate speeds of the airplane. The builder will therefore be able to neglect this case.

This does not apply to closed flaps when the machine flies at high speeds. We shall distinguish

1. Lower-surface flaps
2. Upper-Surface flaps

1.31. Lower-surface flaps.- Once these flaps are closed, they could not be the source of vibrations of large amplitude because they are supported at all points on the wing. Their flutter will therefore never be dangerous but fatigue failure is still to be feared. At high speeds ($M > 0.7$) vibrations of the sheet-metal covering make their appearance, due to the separation of the air flow; this can be improved by proper spacing of the ribs. Thus the remedy will generally be easy and inexpensive.

It will be advisable to provide for high-speed airplanes:

(a) Rigid and sufficiently numerous stops for the flaps
(b) A rather high pressure holding the flaps against their stops
(c) Ribs placed sufficiently close to one another.

1.32. Upper-surface flaps.- The upper-surface flaps may be the cause of dangerous flutter; they are subjected to the airstream on both their surfaces, they can pivot about an axis, they are generally not balanced. All this is distinctly unfavorable. Very fortunately, their location, in a region of the wing which lies near the wing root, where, therefore, the bending or torsional amplitudes are small, diminishes their effect on the critical speed.

One will have to consider them the more dangerous, the more:

(1) Their length increases
(2) Their chord increases
(3) The ratio $\frac{\text{mass of fuselage}}{\text{mass of wing}}$ increases (because an increase in this ratio entails a displacement toward the fuselage of the nodal line in fundamental bending)
(4) The number of flap stops diminishes
(5) The rigidity of the stops and that of the flaps decrease
(6) The unbalance increases.

This enumeration indicates sufficiently the course to follow for lessening the danger which the flaps present from the viewpoint of flutter. In practice, however, the airplane builder will hardly be able to modify anything but the rigidity.

An increase in rigidity always improves the vibratory characteristics; but the weight is increased also. One should therefore concentrate the efforts to obtain increased stiffness at well-chosen points, that is, above all, on the stops. The construction frequently employed in the form of a fillet, as shown in figure 18(c), is acceptable only where sufficiently thick and stiff sheet metal is concerned. Sometimes springs are provided to ensure contact with the stops without precise adjustment of the parts; it is self-evident that the springs used must not be too weak. As far as possible, the latch must be rigid and without play; from this viewpoint it will be desirable to have the latch as close to the flap as possible, thus to be freed from the necessity of using a larger number of latches. If there is only one, one should place it at least toward the middle of the flaps (fig. 18(b)). Let us remember that a little air in a hydraulic actuator gives it the elasticity of a spring; a supplementary mechanical latch is always recommended.

To summarize, one should try to avoid free motions of the upper-surface flap, and one should particularly guard against deformations of the stops, of the latches, and of the flap itself. The moment holding the flap against its stops should exceed the value 5 mrg.

m mass of the flap

r distance from the center of gravity to the axis

g acceleration of gravity

1.33. Braking flaps.- Certain airplanes have flaps for braking in dives. Is it necessary to examine these devices from the viewpoint of flutter?

Their diversity does not allow general rules. It has been found long ago that they were the source of vibrations, but these vibrations are due to the detachment of the air flow, not to flutter.

By any method, the steps to be taken are always the same: rigidity of the flap, latches tight, without play. A recommendable solution is to divide the total area required for braking into several rather small flaps, the frequencies of which should, if possible, differ from one another.

1.4. Tabs

The study of the tabs is of fundamental importance; they are very often the cause of flutter, and modern airplanes which were involved in accidents had almost always tabs with a strong tendency to vibrate.

One can distinguish four types of tabs:

(1) The automatic tab whose angle relative to the flap is controlled by the rotation of the latter.

(2) The controlled tab the position of which is regulated at will by the pilot.

(3) The tab whose position depends on the force exerted on the control (spring tab and other analogous devices).

(4) The tab called "direct-control tab" which serves for maneuvering the control surface.

1.41. Automatic tabs, controlled tabs.- As far as the tabs of the first and of the second category are concerned (sometimes, one and the same tab is at the same time automatic and controlled), theoretically they are part of the flap which carries them and add to it no supplementary degree of freedom; their natural frequency is infinite. In practice, the elasticity of their construction and of their control mechanism as well as the play of the various joints lower this frequency the degree of which constitutes the best criterion of the value of the design.

We remark in passing that the exact calculation of the critical speed of a system containing a tab is long and uncertain. Wind-tunnel tests on a dynamic model will give faster and more precise results; but they are expensive because they must be performed at high speed and are, for this reason, justified only for a machine intended for mass production.

In the opposite case, one will limit oneself to the calculations of strength even if their less precise conclusions lead to overdimensioning of the part, thus making it more expensive; in the long run, though, the total cost will be less and the specimen of more than necessary strength will - because it will be more rigid - be safer also from the viewpoint of flutter.

In all cases it is desirable that the frequency of the tab - for it will actually have one - should be distinctly higher (50 percent) than the frequencies of the wing and of the aileron. This frequency depends on the mass and on the rigidity, and one should try to achieve a

mass/rigidity ratio as small as possible; this does not always agree with the first rule of aeronautical design which is, to obtain a mass/strength ratio as small as possible.

In reference 3 one will find a recommendation concerning the natural frequency of the tabs. It should be higher than the value given by the following formula:

$$f_n \geqq 168 \frac{V_p}{c} \frac{l_t}{l_s}$$

where

f_n minimum natural frequency of tab installed on the airplane in cycles per minute

V_p equivalent of the diving speed (in knots)

c chord of the control surface behind the hinge axis, measured in the middle section of the tab [m]

l_s span of the control surface

l_t total span of the tabs mounted on the control surface

Note: This formula is valid only for $1{,}000 < f_n < 4{,}500$ $[\text{min}^{-1}]$ plus 50 percent.

In figure 19 and still more clearly in figure 20, the principal points capable of contributing to the flexibility have been indicated:

(a) The fixity of the bearings
(b) The play in the bushings
(c) The bending and torsional elasticity of the tab
(d) The elasticity of the ribs where the control surface is attached
(e) The play in the pivots
(f) The elasticity of the control rod (especially when it is operated in torsion or bending)
(g) The elasticity of the starting point of the control system

The frequency depends also on the number of bearings and on their position, as well as on the number of control levers. At equal weight, the frequency will increase with the number of bearings, and that increase will be the more noticeable the lower the rigidity of the tab

itself. Piano-chord hinges are to be recommended especially when they are suitably designed. (See fig. 21.) This point is very important; a bad arrangement of the hinges lowers the bending frequency of the tab as well as its rotational frequency. The piano-chord hinge is, besides, very well suited for mass production; its only disadvantage is that it makes the balancing of the tab (the importance of which we shall describe) a little more difficult.

The torsional frequency of the tab is still more important than its bending frequency. A control using several levers will, from this point of view, be more favorable than a single-lever control; besides, such an arrangement is more favorable than the increase in torsional rigidity of the tab from the viewpoint of weight. The number of levers depends obviously on the dimensions of the tab; but one must make it a rule that, for a length of more than 50 cm and a chord of more than 8 cm, two levers are indispensable unless the tab is perfectly balanced.

In a small tab the control mechanism of which contains only a single push rod, this latter should actuate it at its center, not at one of the tips. But it must be well understood that everything we said above about the advantages of a multiplication of the number of control levers presupposes that these levers are perfectly constructed, without appreciable elasticity and without play. Otherwise, they would only multiply the sources of flutter.

For instance, in figure 22, one sees an elbow-shaped lever controlling a tab; this arrangement, built for a certain airplane, aimed at transmitting to the tab the motion of an actuator placed entirely inside the profile. However, it introduced a lateral flexibility which formed with the mass of the push rod of the actuator a system vibrating at a rather low frequency which induces flutter.

1.42. Balancing of the tabs.- Theoretically, any tab susceptible to oscillation requires complete balancing. The English regulations require this balancing of any airplane with a speed exceeding 640 km/h and require authorization by the Air Ministry for any digression.

In Germany, balancing was likewise required; however, this rule was not rigorously observed, especially if the tab considered carried a control mechanism with multiple levers (the rule was more strictly enforced in the case of a single push rod). In fact, when a tab can vibrate at a relatively low frequency, either because it is provided with a spring, or because of the elasticity of its bearings, its control mechanism, etc., it is quite sure that its balancing will increase the value of the critical speed. However, if the frequency of the tab is relatively high, it is not certain that the final effect of its balancing will be favorable. Here are the reasons:

(a) The balancing mass will increase the inertia and will therefore diminish the torsional frequency.

(b) Due to its off-center position, the balancing mass will increase even more the inertia of the aileron.

(c) The balancing mass of the tab unbalances the aileron. In order to correct this unbalance, one must increase the masses situated in front of the hinge axis; hence increase in weight and in inertia.

(d) These increases in weight, of the tab as well as of the aileron, displace the center of gravity of the wing toward the rear which is, in general, unfavorable.

For all these reasons, balancing of the tabs was frequently neglected in Germany. One was content to raise their frequency as much as possible, by the means previously indicated. Neither of the two solutions, balancing or increase of rigidity, seems to be preferable to the other from the viewpoint of expenditure.

1.43. Spring tabs, direct-control tabs.- The tabs of these two types are very dangerous from the viewpoint of flutter. As far as they are concerned, the best solution is not to use them. They must always be rigorously balanced and may require eventually dynamic balancing (appendix III).

It is impossible to treat all the very complex and critical problems they raise, within the scope of this report. In every particular case, it will be advisable for the builder to consult a specialist. We remark, however, that all advice given previously, regarding absence of play, rigidity, etc., remains valid here, too.

1.44. General suggestions.- The free play of the tab must not allow a relative angle of more than $1/2^{\circ}$ between the aileron and the tab.

The construction of the bearings and the attachments must be done very carefully so that the play does not increase by more than 50 percent, at most, under the effect of periodical stresses or of an abrupt shock, in flight. In fact, the propeller slipstream imposes sometimes very high dynamic loads on the tabs. The possibility of wear of the bearings and the hinges by the abrasive action of dust or sand mixed up with the lubricant must not be underestimated.

The static resistance to forces and fatigue should obviously be assured. A failure in the control mechanism may be the origin of flutter. One should avoid having parts operating in bending or in torsion and if it is unavoidable, one should take care to give them great rigidity. In all cases, the deformation of such parts must not exceed 50 percent of the total deformation of the control in question.

As to the location of the tabs:

(a) One should avoid placing them in the propeller slipstream.

(b) One should place them, as much as possible, in the vicinity of the aileron bell crank since it is the most rigid section.

(c) Likewise, one should place them, as far as possible, toward the aileron end closest to the fuselage where the amplitudes of the wing and hence the influence of the tab on flutter are smallest.

2. TAIL SURFACES

The parameters of flutter are evidently the same for the tail surfaces and for the wing: aerodynamic forces, inertia forces, elastic return forces. Everything that has been said about the wing therefore remains valid for tail surfaces and in what follows we will emphasize those aspects which are peculiar to the problem for these airplane elements. However, sometimes certain facts will be restated to underline their importance and to better illuminate the connection between certain questions.

2.1. HORIZONTAL TAIL

2.11. Horizontal Stabilizer

Everything that follows concerns the horizontal stabilizers of conventional form excluding sweptback ones on which one does not possess sufficient information at the present time. However, the general recommendations expressed below remain valid also for horizontal stabilizers of this type.

2.111. Bending and torsion.- Just as for the wing, and for the same reasons, one need not give attention to the bending frequency of the horizontal stabilizer.

As for torsion, one should attempt to achieve, just as for the wing, a high structural rigidity, and one should avoid impairing it by openings.

In this connection, we must mention here the inspection covers. These latter are evidently very practical for the inspection and maintenance of the control mechanism, but from the viewpoint of flutter they are clearly dangerous. One should distrust especially those the attachment of which has been designed in such a manner that, in the strength calculations, the

cover may be considered as load-carrying. In fact, in the case of sufficiently strong vibrations, the attachment will immediately develop free play, and the hypothesis of a rigid connection between cover and wing covering will no longer be true. Doubtlessly, the attachment, even with play, will limit the motion of the cover to small amplitudes, but small-amplitude flutter may be dangerous flutter. And under the continuous effect of the vibrations, the free play will constantly increase and thus lower the frequency of the horizontal stabilizer. Figure 25 illustrates what has just been said. It expresses the result of the measurement of the frequencies of a horizontal stabilizer provided with inspection openings as a function of the magnitude of the exciting force. The lowering of the torsional frequency (curve a) is considerable; the lowering of the bending frequencies (curves b and c), though less significant, remains very distinct.

If an inspection opening is indispensable, one should at least attempt to place it in the least unfavorable position and one should provide local reinforcements.

2.112. Connection with the fuselage.- One of the most dangerous forms of flutter for the horizontal stabilizer is symmetrical bending-torsion. One realizes that the elasticity of the connection with the fuselage, like the elasticity of the rear part of the fuselage itself, plays an important part in this. All efforts aiming at making the horizontal stabilizer rigid will be useless if the horizontal stabilizer is not suitably attached and held.

It is particularly difficult to obtain this rigidity if one has to deal with a horizontal stabilizer, the incidence of which is adjustable in flight. The device for adjustment always introduces a certain elasticity which lowers the torsional frequency of the horizontal stabilizer. This is also true for a device of adjustment on the ground; but this latter can be made much more easily in a sufficiently rigid form.

Moreover, an adjustable horizontal stabilizer is connected to the fuselage only along two lines: the fixed hinge axis and the variable hinge axis. This last one is less rigid than the fixed axis, and a displacement of the elastic axis of the horizontal stabilizer results. This may bring about a noticeable increase as well as decrease of the critical speed. Should the occasion arise, a calculation method is recommended. (See appendix IV.)

The English regulations give a numerical criterion for the rigidity of the horizontal stabilizer. However, they do so without taking the fuselage into account which greatly diminishes the practical value of such a criterion.

The formula is as follows:

$$T \geqq \frac{\beta^2 V^2 b c^2}{2\sqrt{1 - M^2}}$$

with

V	equivalent sea-level diving speed, m/s
T	torsional rigidity measured at 8/10 of the semispan, m kg/rad
b	span of the horizontal tail surface, m
c	mean chord, m
M	Mach number
β	numerical criterion: $\beta = 0.33$ or $\beta = 0.26$, according to whether or not the horizontal stabilizer carries the vertical tail surfaces

Regarding this formula, one could restate the remarks made before at the occasion of analogous formulas relating to the torsional rigidity of the aileron (section 1.25), and to the torsion of the wing (section 1.13). We refer the reader back to them and recommend, in particular, a certain caution in the use of this formula in the case of the airplanes with horizontal stabilizers carrying two vertical fins.

2.113. Influence of the vertical tail surfaces.- Vertical tail surfaces are treated here only insofar as they influence the vibratory properties of the horizontal stabilizer when they are directly carried by the latter. A central fin also may exert an influence on the horizontal stabilizer through an insufficiently rigid fuselage, but this is not examined here.

The fins act on the horizontal stabilizer which carries them chiefly by their mass; thus we shall speak here, above all, about the distribution of the masses.

Since satisfactory behavior of the airplane imposes on the designer a certain amount of total area of the vertical tail surface, he should let himself be guided - regarding distribution and shape of this area - by the following considerations which are intended to prevent flutter.

Above all, the moment of inertia with respect to the elastic axis of the horizontal stabilizer must be as small as possible so as not to lower

the torsional frequency of the latter. This moment of inertia consists of the inertia of the vertical tail surface with respect to its center of gravity Iv plus the product of its mass m and the square of the distance r of its center of gravity from the elastic axis of the horizontal stabilizer.

$$I = Iv + mr^2$$

In cases like those represented in figures 26(b) and 26(c), the value of r may be very large. Thus one should avoid this type of arrangement as far as possible although the necessity of ensuring a sufficient protection for the tail surfaces, in the case of a tail-wheel airplane, sometimes forces the designer to resort to it.

Also, one must avoid coupling of bending and torsion of the horizontal stabilizer. This requires that the vertical projection of the center of gravity of the vertical tail surface on the horizontal stabilizer which, in the majority of cases, is situated behind the elastic axis of the horizontal stabilizer (because of the weight of the rudder) should be as close as possible to this axis. In other words, the projection r_x of the distance r on the x-axis (parallel to the fuselage axis) is generally positive, but it is desirable that r_x should be very small or even negative. However, it must be noted that, if this is not possible, that is, if one cannot succeed in making r_x very small, it is not always favorable to reduce its value and in certain cases, such as the one represented in figure 26(c), it would, on the contrary, be desirable to make r_x still larger. In the dubious cases, simplified calculations will indicate the solution which should be adopted. (See appendix IV.)

Another coupling, that of the torsion of the horizontal stabilizer with the rotation of the vertical tail surface about an axis parallel to Oz (vertical axis), depends on the magnitude of the projection r_z of the distance r on the axis Oz. This coupling may be favorable, though, because it increases the antisymmetrical-torsion frequency of the horizontal stabilizer. In this case, the calculations are rather complicated. One should simply remember that a high value of r_z is not a priori unfavorable, especially if, otherwise, the control surfaces are perfectly balanced. But one should not forget that in any case an increase of r_z causes an increase in the moment of inertia.

2.12 Elevator

The requirements of rigidity and mass balancing which we have enumerated with respect to the aileron are just as valid concerning the elevator.

Sometimes the static balancing of the elevator is opposed, for the sake of ensuring the stability of the airplanes in flight. For airplanes of relatively low speeds, below approximately 400 km/h, one may allow certain static unbalance of the elevator, but for a high-speed airplane where the question of flutter becomes of fundamental importance, it will be necessary to balance the elevator, pitching stability then being achieved by means of a pendulous device linked to the control and located in the fuselage.

2.121. Bending rigidity.- Generally, the conventional construction methods for the control surfaces ensure for them a satisfactory bending rigidity. We recall that it is necessary that the bending frequency of the elevator should be higher than the torsional frequency of the horizontal stabilizer. This is obtained by the proper degree of rigidity of the structure, and above all by the choice of a suitable distance between the bearings.

2.122. Rotational rigidity.- The vibrations of the elevator about its hinge axis can have two principal forms (we are here concerned with the conventional elevator with two movable surfaces separated by the fuselage; see fig. 27):

(1) Symmetrical motion of the two flaps
(2) Antisymmetrical motion

The first motion involves the control, but the second does not introduce any constraint, provided, of course, that the two elements of the elvator are symmetrical and that the control operates exactly in the plane of symmetry.

In both cases, the connecting device between the two movable surfaces plays a very important role. It consists most frequently of a torsion tube, but there exist other types of connection, too. Almost always this device possesses a high natural elasticity, notably in the case of the tube which operates in bending and torsion, and the rotations of the elevator which are made possible by this elasticity will be the source of considerable aerodynamic forces favorable to the appearance of flutter.

However that may be, as far as the rotational frequency is concerned, the rule to be followed is the same as for the aileron: to make sure that this frequency is higher than the principal frequencies of the horizontal stabilizer and, if that is not possible, to keep it distinctly below the torsional frequency. One should not forget, in this connection, that the effective frequencies of the horizontal stabilizer are concerned here; one thus denotes - in contrast to the frequencies of that element vibrating separately - those frequencies which it possesses effectively in a given machine, taking into account the flexibility of the fuselage and also of the vertical tail surfaces which it may carry, as the case may be.

The adjustment of the frequency of the elevator will be achieved, as usual, by varying the elasticity and the masses; of course, one should prefer introducing, if necessary, supplementary elasticities rather than masses which would increase the inertia and the weight.

Thus, if one has decided to impart to the elevator a supplementary elasticity, there now arises the problem of finding the best place to put it. If the elevator is balanced over its entire span, the localization of the elasticity is of no importance, provided, of course, that the balancing masses remain rigidly attached to the elevator. It is different in the case of balancing by concentrated masses because one must avoid introducing an additional vibration of the concentrated masses with respect to the elevator. To avoid it, it will be necessary to keep the elevator rigid, and the flexibility will then be introduced preferably in the connecting device between the two movable surfaces.

2.123. Balancing of the elevator.- Balancing by a mass distributed along the leading edge is sometimes difficult to accomplish for the control surface we are here concerned with, because the latter generally has a relatively large chord as well as a hinge axis situated very far forward, in order to avoid an excessive aerodynamic balancing. Under these conditions, a distributed mass balancing would require a relatively high weight.

One may then try to achieve either static balancing by concentrated masses, or dynamic balancing.

Besides, the two types of balancing are frequently combined as shown in figure 27 where the horn of the elevator which ensures the aerodynamic balance, loaded with a suitable mass, contributes at the same time to the static and to the dynamic balance.

The rigid connection of such masses to the elevator proper is of fundamental importance; it is not always easy to achieve it, because of the openings required by the bearings in the leading edge of the elevator which forms the torsion box. Therefore, to ensure for it sufficient rigidity, one will have to reinforce this leading edge suitably, even if that leads to dimensioning it well above the simple stress requirements of this element.

For certain forms of vibration, a weight situated at the tip of the control surface may ensure its dynamic balance. This permits (see appendix III) a considerable reduction in the total balancing weight while the natural frequency of the elevator is increased. In one single case this form of balancing proves ineffective: in the case where the bending of the fuselage sustains a flapping of the tail surfaces in such a manner that the amplitude of the motion is the same along the entire span of the elevator.

In the general case, one may regard the motion of the horizontal tail surfaces as the sum of two other motions:

(a) A bending of the horizontal stabilizer which one may assume to be of a parabolic form, expressed by the relation $z = Ay^2$ (fig. 28)

(b) A bending of the fuselage, with an ordinate $z = B =$ constant at the point of intersection of the elastic axis of the horizontal stabilizer with the axis of symmetry of the fuselage.

One can see that, with A and B known, one can calculate the suitable weight to be placed at the elevator tip to ensure the dynamic balance of the elevator. Figure 29 presents a curve which gives precisely this weight as a function of the ratio B/A.

Let us note here that the American regulations (fig. 12) adopt an analogous viewpoint based on the ratio of the frequency of the elevator to the frequency of the horizontal stabilizer. The frequency of the elevator here considered is a symmetrical frequency, that is to say, the frequency of a motion where the combination of the two movable surfaces vibrates in the same manner against the control.

For the calculation of the ratio K/I, the American regulations add to the diagram 12 which was mentioned before with regard to the aileron (section 1.24) and which is usable for the three controls, a new diagram (fig. 30) which replaces the diagram 11 used for the calculation of the aileron.

As to the French regulations, their specifications are the same as in the case of the aileron (section 1.24), the reference axis x being always the hinge axis, and the reference axis y becoming in this case the fuselage axis.

Everything that was said above can only serve for verification, a posteriori, of an elevator which is already constructed. For the engineer who is still in the design stage, our experience permits stating the following rules:

1. If the designer has no knowledge at all regarding the frequencies of the fuselage, of the horizontal stabilizer, and of the combination of elevator and control system, he should consider ideal static balancing of the elevator. He should place the balancing masses preferably toward the tip.

If this total balancing does not satisfy the aerodynamic conditions of pitching stability, one should ensure the latter by supplementary stabilizers in the fuselage. After having performed tests, one will know whether there is reason for more or less reducing the balancing masses as well as for keeping or eliminating the stabilizers.

2. Since the calculations for determination of the natural bending frequencies of the fuselage and of the tail surfaces are relatively simple, the evaluation of the weight required for balancing does not offer great difficulties. Such balancing simplifies the construction and reduces the weight. Nevertheless, whatever the values yielded by the calculation may be - one should take care, as a precautionary measure, not to establish a static balance smaller than 50 percent of the perfect static balance.

3. If the balancing mass is distributed over the entire span of the elevator, one will have to anticipate a total static balance since in this case a dynamic balancing does not take place. After ground tests, it will still be possible in this case to reduce the masses anticipated, but the reduction will not be as significant as in the case of a single mass at the tip.

2.124. Balancing by elastically suspended masses.- It has been proposed - and in some cases, realized - to balance a control surface by means of a mass attached to a spring. In this case, one makes the natural frequency of this device equal to the flutter frequency as it had been determined by calculations and tests. At critical speed, the amplitude of the motions of the mass then becomes very large and likewise, consequently, the acceleration to which this mass is subjected so that its apparent weight will be considerably higher than its weight at rest. The economy in weight for the airplane is evident, and one can also, thanks to this artifice, leave to the control surface a certain unbalance necessary for good stability.

The following disadvantages are opposed to this:

1. One can determine mass and frequency of this arrangement only by very tiresome flight tests or model tests.

2. On the other hand, it is not customary to verify the frequencies of a machine in service. Besides, such verifications would not be easy since they would require specialized equipment and personnel. Thus the variations in frequency resulting from wear, from repairs, deformations, etc., constantly require adjustment of the device for elastic balancing. If this is not done, the device may become dangerous and a cause of flutter.

The designer is therefore advised against resorting to this procedure, at least for an airplane of customary size. For an extremely large machine, adoption of this method could be justifiable, provided, of course, that a careful study is made beforehand.

2.125. Case of the displaced hinge axis.- We have already discussed, in connection with the aileron, control surfaces the hinge of which is not in the symmetric plane. Flutter prevention does not necessarily require

the balancing in height of such a control surface, and it will be sufficient to place the center of gravity along a vertical line through the hinge.

If perfect balancing is achieved, an inclination of the device such as a deflection of the control surface does not change anything in the conditions for the appearance of flutter. However, in the case of an imperfect balancing, even though the inclination of the device still has no other effect but that of modifying the amount of the static moment, the situation is different regarding a deflection of the control surface; such a deflection, displacing the center of gravity of the elevator with respect to the horizontal stabilizer, causes, due to this fact, an additional coupling.

Rather than to accept this coupling, we advise in such a case an overbalancing of the control surface in such a manner that for any deflection which is possible in flight (taking into account the forces involved as much on the part of the pilot as of the structure for a speed of $0.75V_{max}$) the center of gravity is projected in front of the hinge axis.

As has been said before, this balancing might cause disadvantages regarding the stability of the machine. Thus one will resort in this case also to a stabilizing mass situated in the fuselage. (For the ailerons, the effects on the control of the position of their centers of gravity compensate each other.)

2.13. Bob Weight

We have mentioned several times employment of a mass situated in the fuselage and acting on the elevator in order to stabilize the machine in flight.

Of course, the introduction of such a mass into the elevator-control surface system modifies the natural frequency of that system and it will become practically impossible to keep this frequency above the torsional frequency of the horizontal stabilizer as would be desirable. For want of this possibility, one should therefore attempt to lower the obtained frequency as much as possible. One will be limited in this direction only by the natural pitching frequency of the airplane.

One may question whether the bob weight can play the role of a balancing mass applied to the control surface. This is possible for certain forms of vibration but not in all cases. First of all, it is necessary that the vibration concerned be of the type which sets into motion fuselage and tail surfaces at the same time, and if that is the case, it is furthermore necessary that fuselage and elevator be in opposite phase. One sees, in fact, in figure 31 that the forces of inertia must act on

the control surface and on the mass situated in the fuselage in an opposite sense in order to bring about reciprocal compensation of their motions. Therefore, only a test or preliminary calculations will make it possible to determine the favorable or unfavorable role which the bob weight may play in particular cases.

For certain very rigid fuselages like that of the DO 335 which has an engine in the rear, or in the case of a nozzle, the motions of the fuselage will have a very small amplitude, and the influence of the bob weight will not make itself felt at all - unless the horizontal tail surfaces are very heavy, for instance, when they carry relatively weighty vertical tail surfaces at their tips; in this case the relative magnitude of the amplitude of the fuselage would be increased in spite of its rigidity.

In practice, one should either dimension the bob weight in such a manner as to impart to the elevator bob weight combination a very low frequency which is, however, still higher than the pitching frequency of the airplane, or one should place the bob weight toward the front, that is to say, in the neighborhood of the center of gravity of the airplane, in order to protect it from the motions of the rear of the fuselage and thus to eliminate any influence from those motions. Otherwise, one would have to make a thorough study of the problem, guided by the principles we have discussed here.

2.14 Tabs

From the viewpoint of flutter, tabs in general have a greater effect on the elevator than on the ailerons.

This stems from the fact that the natural frequencies of the horizontal stabilizer of the elevator are generally higher than the corresponding frequencies of the wing and of the aileron, and are closer to the natural frequencies of the tab itself.

Everything that has been said regarding tabs mounted on the aileron (section 1.4) remains valid for tabs mounted on the elevator. We recall here only the essential points:

(a) Free play: one may allow a certain free play of the tab, parallel to its hinge axis. Any other play is dangerous (especially if the tab is subjected to the propeller slipstream).

(b) Elasticity: the tabs and their control mechanisms must be as rigid as possible.

(c) Balancing: regarding this subject, see the recommendations made apropos of the aileron tabs. The regulations require perfect balancing but, in our opinion, this requirement is not justified.

2.2 VERTICAL TAIL SURFACES

2.21. Fin

2.211. Central fin.- In the case of a single fin placed in the plane of symmetry of the airplane, one need not pay any attention at all to this element, from the viewpoint of flutter. With a suitably balanced rudder, flutter is very rare. It is evident that the general rules, already discussed at length in the course of this report, are to be applied equally to the construction of a fin: rigidity of the structure, distribution of the masses (forward position of the center of gravity), etc.

However, one should not be too concerned if the center of gravity should be placed relatively far to the rear, as happens frequently because of the rudder. The mounting in the fuselage must be sufficiently rigid, but above all the fuselage itself must possess a suitable torsional and lateral-bending rigidity (the rigidity of the fuselage will be discussed later on).

2.212. Laterally disposed fins.- We examined this type of construction with regard to its effect on the flutter of the horizontal stabilizer before. Besides, since these members are relatively small (for they have only half the surface required by the directional stability of the airplane), their natural bending-torsional flutter need not be feared.

2.213. Fin carrying the horizontal stabilizer.- This type of construction is dangerous whatever may be the location of the horizontal stabilizer along the height of the fin. For this reason it is necessary to take a certain number of precautions:

(a) Rigidity: a high degree of rigidity is required of the portion of the fin situated between the fuselage and the horizontal stabilizer as also, as has been said before, of the mounting of the fin in the fuselage, and of the fuselage itself.

As to the mounting of the horizontal stabilizer on the fin, one cannot make any a priori statement about it; in certain cases a certain flexibility of this mounting may be favorable, provided the fin has sufficient torsional rigidity.

(b) Distribution of the masses: two cases must be distinguished; if the center of gravity of the horizontal tail surface is to be near the leading edge of the fin, one should place it as far forward as possible (as much as the aerodynamic considerations will permit).

If the center of gravity of the horizontal tail surface can be located only rather far rearward, it is sometimes better to increase its distance from the elastic axis of the fin or to make the connection of these two elements flexible (cf. 14). Calculations are then necessary to determine the influence of these modifications on the critical speed. (See appendix IV.)

2.214. Numerical data.- The English regulations provide for the fin the same criteria as for the horizontal stabilizer. It must be noted that they do not deal with the special cases we treated above.

2.22. Rudder

With regard to the rudder, one should reread everything which has already been said about the movable control surfaces. We enumerate below only the particular aspects peculiar to the rudder.

2.221. Central fin.- The area of the rudder is generally rather large, it may attain one and one half times that of the elevator. Under these conditions, everything remains valid that we said, in discussing the latter, about the difficulty of a satisfactory balancing by means of distributed masses, because of the weight of the element, on one hand, and of the very short lever arm available in front of the hinge axis, on the other hand; especially, if the aerodynamic balance is ensured by trailing-edge flaps which move the center of gravity of the rudder back toward the rear.

On the other hand, the rudder offers two favorable locations for the concentrated balancing masses; they are its two ends. The tip, on the one hand, quite frequently carries a horn for aerodynamic balancing which is very suitable for carrying a balancing mass; the lower end of the hinge axis, on the other hand, can easily carry another mass which will be situated inside of the fuselage and will be capable of having a rather long lever arm.

As for the elevator, the concentrated masses permit achievement of either static or dynamic balance, or of both at the same time.

The distribution of the masses between the two extremities of the rudder depends on the form of vibration of the fin and especially on the position of the nodal line. If one is faced with a lateral bending of the fuselage with approximately the same amplitude at all points of the fin, the distribution of the masses is without importance. But if twisting of the fuselage is present, the dynamic balancing increases with the mass situated at the free tip of the rudder and may become an excessive balance. In this case, however, one should be careful not to reduce the mass in question too much, in order to maintain its effectiveness for the other case, that of lateral bending.

To illustrate the complexity of the problem figure 32 shows the case where a mass situated too low in the fuselage at the end of the hinge axis, far from contributing to balance, causes on the contrary an unbalance. In this case it will be appropriate to place the lower balancing mass as high up as possible in order to have it close to the nodal line.

2.22. Laterally disposed fins.- The case of two fins at the extremities of the horizontal stabilizer occurs frequently. Also, one finds sometimes three fins, one central and two lateral ones. The complexity of the vibratory phenomena obviously increases with the number of fins, and we must limit outselves to a few general suggestions:

(a) All observations given for a single rudder, concerning the rigidity, the balancing, etc., remain valid. Each control surface should be balanced individually.

(b) This does not prevent grouping a part of the balancing masses in the fuselage, those which correspond to the mass situated at the lower extremity of the axis in the case of a single control, provided that the control mechanism in the tail has sufficient rigidity.

(c) In certain cases, it will be possible to place in the fuselage all the masses required for balancing. But this can only be done after sufficient information has been obtained in ground tests.

One sees from what was said above that multiple fins offer a rather large number of possibilities regarding their balancing. Doubtlessly, these possibilities can become known only by tests and by rather lengthy studies, requiring collaboration of specialists. However, since we are concerned in general with large airplanes, these studies and these tests are worth the effort since they may pay for themselves by a considerable saving in weight.

2.223. Fin carrying the horizontal stabilizer: rudder in two parts.- The separation of the rudder into two elements, sometimes made necessary by the fact that the horizontal stabilizer is carried by the fin, is not absolutely disadvantageous from the viewpoint of flutter.

It will be necessary to balance each of the parts of the rudder separately if it is not possible to connect them very rigidly with each other. The aim is, as has been said above, to obtain a rudder frequency which is higher than the torsional frequency of the fin, but in this case this objective can generally be realized easily because the presence of the horizontal stabilizer considerably reduces the torsion of the fin.

2.224. Attachment of the balancing masses.- However carefully made and rigid the attachment of the balancing masses to the rudder may be, one can hardly avoid that these masses constitute, together with the rudder, a system vibrating in torsion the frequency of which will be lower than the torsional frequency of the fin. Even more important than the frequency is the form of this vibration. We shall here briefly examine this question.

Concerning the frequency: it must be either above the natural bending frequencies of the fuselage and of the fin or, if it can not be above them, as had been assumed, it must be very much below the torsional frequency of the fin. If, after ground tests, a modification of this frequency is deemed useful, it can easily be achieved by modification of the elasticity of the attachment of the masses.

Concerning the form one should refer to the figure 33 which illustrates the role of the ground tests in the search for measures suitable for the prevention of flutter. May it help the manufacturer to better understand and welcome the demands of the engineer who interprets these tests!

The rule is to avoid, above all, that the elasticities be located in the attachments themselves of the balancing masses. This is shown in the example, treated in figure 33, of a rudder provided with a balancing mass at each of its extremities.

We assume a certain form of torsion of the fin, for a frequency higher than the torsional frequency of the rudder. If the elasticity of the latter is uniformly distributed over its entire length, the form of vibration will be that of figure 33(a); its appearance expresses an overbalance at the lower extremity and an underbalance at the other extremity; from the viewpoint of flutter, the two compensate each other (approximately).

Still more favorable is the form represented in figure 33(b) where the entire elasticity of the rudder is localized toward the attachment of the lower mass; there results an overbalance of almost the whole rudder (except toward the bottom) which is favorable. In figure 33(c), one sees in contrast what happens in the case of a considerable elasticity in the region of the attachment of the upper mass. The action of the latter is predominant, as a result of the larger amplitude of its motions, and almost the entire rudder will be underbalanced which must be avoided.

Conclusion: the manufacturer should be careful to avoid any discontinuity in the rigidity and any excessive flexibility in the attachments of the masses.

2.23. Tabs

Everything that has been said regarding the aileron tabs or the elevator tabs is equally valid for the rudder tabs. The majority of cases of flutter of the vertical tail surfaces can be attributed to the tabs, and there does not exist any case of vibration of a balanced rudder without participation of the tabs. This indicates best their importance.

3. FUSELAGE

3.1. DISTRIBUTION OF THE MASSES

Evidently, there exist mass distributions which are more favorable than others, as far as prevention of flutter is concerned. But, in general, the designer can hardly modify the distribution imposed on him by the construction and the equipment of the airplane; besides, the effect of the modifications which prove to be possible is generally rather small, and the designer may neglect this question.

3.2. STRUCTURAL RIGIDITY

The rigidity of construction of the fuselage exerts an influence only on the flutter of the tail, and only the rear part of the fuselage is involved in this case. We present the rigidity criteria imposed by the English regulations (fig. 34).

Regarding these criteria, one may remark that they seem to be based more on a good behavior in flight of the airplane than on the prevention of flutter. But it is quite evident that observation of the rules imposed by the regulations is favorable for the antiflutter properties of the airplane. As other important points, we shall mention:

(a) The ratio of the bending rigidity of the fuselage and its moment of inertia with respect to the transverse axis of the airplane.

(b) The ratio of the bending rigidity of the fuselage and the mass and the inertia of the horizontal tail. The rigidity of the fuselage must increase when the latter increase.

(c) The slope of the elastic axis of the fuselage at its extremity. In this connection it must be said that the criterion indicated by the regulations is clearly insufficient; first, because it speaks of the displacement of the fuselage under the effect of a force only, without examining the case where a moment would be applied; second, and foremost, because it mentions only the displacement of the extremity of the fuselage and neglects its slope. However, the latter, because of being linked to the torsion of the horizontal stabilizer, plays a predominant role.

(d) The connection of the fuselage with the horizontal tail.

3.3. ATTACHMENT OF EQUIPMENT

In a flutter calculation, one considers all masses situated in the airplane (in contrast to the elements of the structure) as rigidly connected with the airplane. In practice, this is far from being correct; the attachments of the engines, for instance, of the tanks, of the landing gears, etc., have a certain flexibility and, as a result, the masses which they connect to the structure form with these attachments a vibrating system, characterized by its natural frequency.

One must be careful in the case where these frequencies should coincide with those of the engine or of the propeller; the resonance could cause failures. Outside of that, the manufacturer need not be connerned about these vibrations, in practice; if it is a matter of small masses, they are unimportant; if it is a matter of large masses, their motions depend not only on the attachments, in the strict sense of the word, but on the elasticity of the entire part of the airplane where they are attached; consequently, a modification of their frequency would require extensive structural modifications, not feasible in the large majority of cases.

As to the feasible modifications - they have in general no appreciable effect on the natural frequency of the masses situated within the airplane. Thus, for instance, for the GMP (motor-propeller group), tests concerning modifications of the attachment, ranging from a metal link to an elastic rubber link, have shown that the variation in frequency, even in these extreme cases, did not exceed 20 percent. A stiffening of the wing box structure would have been much more effective (although practically not feasible) (ref. 4).

3.4. MASSES CONNECTED WITH THE CONTROLS

It is almost unnecessary to emphasize that, different from the masses connected to the structure, the masses connected to the control mechanisms are of extreme importance. Their presence modifies the natural frequency of the control mechanisms and, through them, the vibratory characteristics of the control surfaces.

Only ground tests can furnish valid information regarding this subject. The manufacturer should act cautiously by providing beforehand for the possibility of quickly making the modifications which the test could reveal to be necessary.

Translated by Mary L. Mahler
National Advisory Committee
for Aeronautics

APPENDIX I

COMPILATION OF SOME GENERAL CONCEPTIONS CONCERNING VIBRATIONS

Engineers who are less familiar with the problems of flutter will understand the text of this report better if they bear the following few notions in mind:

Since the wings, the tail surfaces, and the fuselage of an airplane are comparable to a beam, it is convenient for the language and the representation of the test results to imagine a pure-bending deformation in which all points of a section undergo the same displacement and a purely torsional deformation in which all points of a section turn at the same angle about a certain point of this section. To these two fundamental types of deformation, one must add the rotation for those parts that are capable of turning about a hinge axis.

In practice, in the course of vibrations, one does not observe these pure deformations. What one obtains if one suitably excites an element in such a manner that all points vibrate in phase (with a constant phase displacement of 90° with respect to the exciting force), is a form (or mode) of natural vibration which one characterizes by its frequency and also, quite frequently, by the number of nodes that it contains. A natural form of vibration is always made up of a combination of pure forms.

On a wing, this will be, for instance, a combination of bending and of torsion. In this connection, one must not get confused regarding the expressions one can find in certain documents, such as: form of fundamental torsion of the wing, form of symmetrical bending, etc. These expressions refer to the mode of excitation or else to the predominance of one of the pure forms; but the natural form always presents a mixture of pure forms. We shall give examples further on.

As to the form of flutter, it is a combination of natural forms. If one refers - to use a simple example - to a vibrating system consisting of masses and of springs, one knows that each mass and the spring which attaches it constitutes what one calls a "degree of freedom" of the system. For solving the system, one will have to write as many differential equations as it possesses degrees of freedom. Likewise, expressing a problem of flutter in equations requires a number of equations equal to the number of natural forms the flutter contains. (This is evidently a theoretical requirement, but we do not deal here with the practical aspects of the problem.)

In flutter calculations, as they are generally performed at present, one starts out from the natural forms which constitute the vibratory motion; this method simplifies the calculations appreciably. One designates them then by the expression "generalized coordinates" of the deformed element because they determine its form in the same manner as it could be done with Cartesian coordinates. But according to what has been said before, one can see that it is legitimate to consider initially, as has been done all through this report, the pure forms of bending, torsion or rotation which are the fundamental components of the flutter vibration. Besides, consideration of the pure forms is, in practice, the only one accessible to the designer because they are characterized by the type of construction the parameters of which determine the critical speed (appendix IV).

Constantly mentioned are the conceptions of mass and of rigidity which do not offer any difficulties, and that of the elastic axis which must be explained here.

It is usually said that an airplane wing does not possess an elastic axis in the sense that it is actually impossible to realize statically a pure torsional deformation of the entire wing, at least for wings designed according to the generally adopted structural types. But if one considers a section of this wing separately, and subjects it to a pure couple, it will turn about a certain point O, and if the section is loaded at that point, it will bend without torsion.

In this report, we designate by the expression "elastic axis" the geometrical locus of the points O. Its usefulness consists in furnishing a line of reference for permitting an estimate of the (favorable or unfavorable) effect of the displacement of the masses in the airplane.

Let us make a concluding remark regarding the representation of vibrations.

Let us recall first that the wings are regarded as plane surfaces with weights which amounts to assuming that the motion is the same for all points situated on a perpendicular to the plane. The section of a wing is thus reduced to a straight line in the plane.

Another hypothesis, a simplifying hypothesis, but rather well verified in practice and which forms the basis for all flutter calculations, is that the sections are undeformable (that is, under the action of the forces coming into play in the course of the vibratory phenomena).

This being the case, the motion of a wing is represented by that of a certain number of its sections. For this purpose, one transfers to the wing plane, from the straight line representing each of the considered sections and perpendicularly to it, a segment proportional to the amplitude of the motion of the point which coincides with the origin of the

segments. According to the second hypothesis above, one can see that it will be sufficient to represent the motion of two points of the section and to connect by a straight line the outermost points of the two representative segments (in practice, one measures the motion at more than two points, but we cannot enter here into the details of the tests). Conventionally, one directs the representative segment towards the wing tip for representing a downward displacement, considered to be positive, and in the opposite direction, thus toward the fuselage, for representing an upward displacement.

The point where the straight line which represents the amplitudes intersects the wing section is a node. Connecting the nodes of the various sections, one obtains the nodal line (drawn in dot-dashes). The nodal line separates in the plane the regions where the motion, at a given instant, is downward from the regions where it is, at the same instant, directed upward.

In figure 23, a form of vibration has been represented which is called "bending vibration" because bending predominates in it. However, this form contains also a torsion which one can see from the fact that the amplitudes of a section are not constant, and also from the fact that the nodal line is not perpendicular to the elastic axis which is here supposed to be rectilinear. The other figure (fig. 24) represents a form of torsion, but it is not a pure torsion as would have taken place if the nodal line had coincided with the elastic axis.

APPENDIX II

AILERON VIBRATIONS OF HIGH-SPEED AIRCRAFT (SEE REF. 6)

($M > 0.65$)

On airplanes at very high speed ($M > 0.65$), vibrations have been observed the origin of which is different from the vibrations which one may call classical with which we dealt in the course of this report. We must now say a few words regarding these special vibrations the consequences of which also may be very serious.

Their cause lies in a detachment of the air flow along the aileron from which results a phase displacement between the motion of that control surface and the oscillation of the aerodynamic forces. The following means are recommended for avoidance of the appearance of flutter.

(a) Use of profiles of the smallest possible thickness and curvature

(b) Profiles having their maximum thickness at 30 to 35 percent of the chord and presenting behind the point of maximum thickness no abrupt variation in their lines, and no protuberances of any sort

(c) Swept wing, particularly forward-swept wing

(d) Wing chord and chord of control surface as small as possible; in addition, the control surface would preferably be placed in such a manner that it is directly exposed to the airstream and not blocked by the wing

(e) High structural rigidity of the control surface

The methods of boundary-layer control also can play a satisfactory role in the prevention of flutter with which we are concerned. However, we mention this only as a reminder since their practical employment seems at present still remote.

We also note that, for a given Mach number, the tendency toward flutter diminishes in proportion as the altitude increases.

Finally, it is evident that an airplane, certain parts of which are in an airstream of supersonic speed while the other parts are in an airstream of subsonic speed, will be subject to violent "shocks," apart from what is normally called flutter.

APPENDIX III

CALCULATION OF THE DYNAMIC BALANCING OF A SURFACE[4]

Dynamic Balancing

A movable surface is dynamically balanced with respect to a certain axis if the angular acceleration of the motion of the surface around that axis does not tend to make it oscillate around its hinge axis. A control surface dynamically balanced with respect to a certain axis will thus remain "neutral" in the course of a torsional vibration around that axis, that is to say, it will behave as if it were rigidly connected to the fixed surface which carries it.

Since the types of flutter one encounters in airplane structures comprize at the same time torsional vibration and bending vibration, the type of balancing and the choice of the axes of reference depend in each case on the particular form of flutter to which the element considered is subject.

Static Balancing

Complete balancing of a control surface is achieved when the center of gravity of the movable element is situated on the hinge axis, in other words, when the static moment with respect to this axis is zero; or else, when the center of gravity lies in a plane passing through the hinge and normal to the mean plane of the control surface. In this connection, one must note the following points:

(a) When a control surface is in complete static balance, the numerical value of the product of inertia K, taken with respect to the hinge axis and to an axis of oscillation parallel to it, is constant; the sign of K, however, depends on the position of the axis of oscillation with respect to the center of pressure (CP) of this surface.

(b) If every section of the control surface normal to the hinge axis is statically balanced, the control surface is in complete dynamic balance for any vibration around an axis normal to the hinge.

(c) A statically balanced surface will always be more or less unbalanced dynamically for any vibration around an axis parallel to its hinge axis.

---

[4]This text is partially a translation of the corresponding passages of reference 1.

Balancing Coefficients

The coefficient K/I measures the dynamic balance of a control surface. A coefficient zero corresponds to a complete dynamic balance for any system of axes: perpendicular, parallel, or forming any angle whatever with one another. A positive or negative coefficient corresponds, respectively, to an underbalance or an overbalance.

This coefficient is dimensionless and consists of a fraction, the numerator of which is the mass product of inertia of the control surface (including counterweight), taken with respect to the hinge axis and to the axis of vibration, and the denominator of which is equal to the moment of inertia of the control surface (including counterweights) taken with respect to the hinge axis.

The coefficient K/I may be considered as representing the ratio

$$\frac{\text{Excitation moment}}{\text{Resisting moment}}$$

and its use is therefore more logical than that of the coefficient C_B which is the ratio

$$\frac{\text{Excitation moment}}{\text{Weight times area}}$$

Both are dimensionless and their use furnishes results essentially comparable for surfaces of conventional form, but only K/I can be used for unconventional surfaces. We have to point out, however, that, if K/I is employed, the results will vary with the aspect ratio of the control surface which will never occur when C_B is utilized, particularly in the case of axes perpendicular to each other.

I. PRODUCT OF INERTIA WITH RESPECT TO TWO PERPENDICULAR AXES

(See fig. 35.) We consider as perpendicular two axes the angle between which is equal to $90^\circ \pm 15^\circ$.

(a) The x-axis is positive behind the hinge, negative in front of it.

(b) The y-axes coincide with the hinge axis. Its positive direction is on the same side of the x-axis as the center of pressure on the control surface in the case of maneuvering (this case is discussed in the regulations governing the calculations). Besides, it will not be necessary to determine the exact position of the center of pressure when the half-plane determined by the x-axis containing it is known unequivocally.

(c) Once the axes of reference are plotted, the area should be divided into relatively small elements; then one should determine and transfer to a table set up for this purpose the weight of each element and the distance of its center of gravity to each of the two axes. (See fig. 36.) This weight and these distances must be determined carefully. The covering fabrics and their varnishes, like the elements of the trailing edge, are sometimes underestimated which may cause a serious unbalance and which leads to attributing to K/I an excessive value. In addition, the modifications in the course of service tend to increase this unbalance.

Referring to figure 35, the product of inertia of the element of the weight P is equal to Pxy. The product of inertia of the entire area is the sum of the elementary products of inertia

$$K = \Sigma Pxy$$

(d) The moment of inertia I_{y-y} of the control surface with respect to its hinge axis is determined with the same values which have served to calculate K.

For an element of weight P, I is equal to Px^2 where x is the distance from the center of gravity of the element to the hinge axis. Consequently, I_{y-y} is equal to the sum of the (elementary) moments of inertia, and its value is ΣPx^2. It must be remarked that the value of I can be determined correctly only if the weights are divided into a sufficiently large number of elements, especially in the direction of the chord. This is particularly important for items such as coverings, fabric or metal, trailing-edge flaps, control mechanisms of these flaps, etc. If we are given the moment of inertia I_G about a line through the center of gravity parallel to the hinge axis, then

$$I_{y-y} = I_G + Pd^2$$

where d is the distance from the center of gravity to the hinge axis.

(e) The coefficient of dynamic balance is then equal to K/I for the axes x and y in question.

(f) It is sometimes necessary to calculate the product of inertia K_2 with respect to a system of axes x_2 and y_2, knowing the product K with respect to two other axes x_1 and y_1 parallel to the first set and situated in the same plane. If one refers to the figure, one sees that

$$K_2 = K_1 + x_0 y_1 P + y_0 x_1 P + x_0 y_0 P$$

where P is the total weight, x_1 and y_1 the coordinates of the center of gravity with respect to the first axes and x_0 and y_0 the distances of the first axes to the new ones (fig. 37).

It must be remarked that in the case of a statically balanced control surface (unbalance zero), the product of inertia K is independent of of the position of the axis of oscillation x, but not of its direction.

II. PRODUCT OF INERTIA WITH RESPECT TO TWO AXES WHICH ARE NOT PERPENDICULAR TO ONE ANOTHER

This case may arise for a bending of the wing coupled with a rotation of the aileron. (See fig. 38.)

The product of inertia with respect to the nonperpendicular axes 0-0 and y-y can be obtained from the rectangular axes x-x and y-y by means of the relationship

$$K_{0y} = K_{xy} \sin \varphi - I_{y-y} \cos \varphi$$

where φ is that one of the angles formed by the hinge axis and the axis of oscillation which contains the center of gravity of the movable surface. One can see that, if one neglected taking into account the correction indicated above, one would have an excessive value of K_{0y} if φ is acute, and a too small value if φ is obtuse.

III. PRODUCT OF INERTIA WITH RESPECT TO TWO PARALLEL AXES THE PLANE OF WHICH CONTAINS THE CENTER OF GRAVITY OF THE CONTROL SURFACE

This case may arise in a torsion of the wing coupled with a rotation of the aileron or else with a bending of the fuselage coupled with a vibration of the elevator or of the rudder.

With the same rotation as in the preceding case where y-y is the hinge axis and x-x the axis of oscillation (see fig. 39 which represents a lateral bending of the fuselage coupled with a rotation of the rudder), we have

$$K_{yx} = x_0 x_1 P + I_{y-y}$$

where

x_0 distance between two parallel axes

x_1 distance from center of gravity of control surface (including counterweights) to hinge axis (positive behind axis and negative in front of it)

P weight of control surface (including counterweights)

I_{y-y} moment of inertia of control surface with respect to hinge

It is therefore evident that if K_{xy} is to be zero, x_1 must be negative, that is to say, the center of gravity of the control surface must be situated in front of the hinge axis.

The particular case where the axes are parallel but where the center of gravity of the movable surface is not in their plane may, in general, be referred to the above case by projecting the X-axis onto a plane passing through the hinge axis, giving a new axis x' and by resolution of the action of the weight into its components parallel and perpendicular to this plane. This is possible when the center of gravity is actually placed in the plane of the new axes which is found to be the case for most elevators and rudders. However, in the case of an aileron such as that of figure 40 where the hinge axis is at the lower part of the movable surface so that the center of gravity is above the plane x' - y, one must take the

components of the weight into account because a considerable unbalance may exist, even with a statically balanced aileron, for the form of vibration which comprises a rotation around the original x-axis.

Influence of the Deformations

The preceding calculations assume that the fixed plane, and hence the hinge axis of the flap, do not undergo any deformation of their own and are subject solely to a combined motion of translation and of rotation around the line of the root. This presupposes implicitly an infinitely rigid fixed plane; actually, however, there exists always a deformation of the vibrating part, a bending, for instance, which has the appearance indicated in figure 41 - a bending which, as has been discussed in the text of the present report, is replaced by a rotation at the origin which is represented by a simple straight line in that same figure.

It is evidently better to take into account the deformations of the considered component, not only its motions as a whole, but this is no easy task for the designer who does not yet know the form of the vibrations. We shall therefore examine this question a little more closely.

The calculations to which one is led are the more interesting as they actually yield for the calculation of flutter more exact results than the measurements made in tests.[5] This is well worth the effort required to perform them.

Let us take as an example a wing provided with an aileron, undergoing bending and torsional vibrations (fig. 42). Complete dynamic balance requires, according to definition, that each aileron section must, in the course of the vibration, accompany the motions of the corresponding wing section as if it were rigidly connected with it. One can see that such a balance is not feasible; the torsional rigidity of the aileron prevents its different sections from following the rotations of the corresponding wing sections.

---

[5]This is due to two causes:

(a) The inertia and the rigidity of the measuring instruments interfere relatively more in measurements made on the aileron than in measurements made on the wing.

(b) The friction of the hinge axis in its bearings is a constant force, the relative magnitude of which varies in inverse proportion to the amplitude of the vibrations considered which are small in the tests but large at the moment of flutter (even more so, if the test is made on a new machine).

If we now consider the simpler case where the wing undergoes a bending vibration only, the dynamic balance is expressed by the following relations (we assume, for the sake of simplifying the calculation, that the aileron is connected to the wing at every point of its hinge axis):

$$\int_{z_1}^{z_2} \mu(z) r_x(z)\ \varphi_k(z) dz = 0 \tag{1}$$

$$\int_{z_1}^{z_2} \mu(z) r_y(z) x_0(z) dz = 0 \tag{2}$$

(This second relationship is rarely necessary: it corresponds to the case where r_y is not zero, that is to say, to a displaced hinge axis.)

The meaning of the symbols employed is given by figure 43. The subscript K modifying y refers to the mode of vibration for which the balance is realized.

We limit outselves to balancing only a certain number of forms of vibrations, those estimated most dangerous from the viewpoint of flutter. One can demonstrate that the number e of the balancing masses is linked to the number n of the balanced modes by the relation

$$e = \frac{n}{2} \text{ if the number of modes is even}$$

$$e_2 = \frac{n + 1}{2} \text{ if the number of modes is odd}$$

under the condition that one can place these masses at suitably chosen points. If the necessities of construction require a placement of the masses at predetermined points, one will have in all cases

$$e = n$$

The mechanical significance of the above integrals (1) and (2) is evident. As to the hypothesis that the hinge axis of the aileron is connected to the wings at all its points - it is approximately true only for piano hinges. The situation is quite different when the connection is made by bearings. In the case where there are only two, we shall calculate simply and exactly the motions of the supposedly rigid hinge axis from the motions of the two bearings fixed to the wing which brings us back to the calculations of the preceding section.

To return to the general case where the wing vibrates in torsion and bending; we have already indicated that a complete balancing is not possible. Thus we limit ourselves to achieving a balance which prevents flutter.

For this purpose, one can limit oneself to achieving a balance such that the sections of the aileron corresponding to the sections of the wing whose amplitude is a maximum in torsion remain motionless with respect to the latter in the case of the vibration considered. Then all other sections of the aileron will be dynamically overbalanced, and the theory demonstrates that, except for a few rare exceptions, an overbalance is always favorable.

In order to achieve dynamic balance in torsion, one utilizes the above integrals (1) and possibly (2); they express the moment of forces of inertia with respect to the hinge axis (except for the factor ω^2). For a given frequency, one must therefore have

$$\omega^2\left[(1) - (2)\right] = \omega^2\varphi I$$

where the angle φ is the amplitude of the torsional motion of the wing in the considered section, and I the moment of inertia of the aileron.

We remark finally that these considerations are valid only for a rigid aileron. For very high torsional frequencies of the wing it will no longer be possible to consider the aileron as rigid, and in this case a balancing mass placed at one of the aileron extremities will hardly contribute to the balance of the other extremity. In such a case, distributed balancing would be preferable.

APPENDIX IV

INFLUENCE OF THE VARIOUS PARAMETERS ON THE CRITICAL SPEED

We give in this appendix the results of a certain number of flutter calculations for illustrating the statements in the report regarding the influence of the principal parameters of an airplane structure on the critical speed. Since the graphical representation of these results makes a limitation of the number of parameters necessary, there can be no question of an exact and complete calculation but only of a simplified and approximate calculation; it will serve, at least, to indicate to the reader the appearance of the curves which express the variation of the critical speed as functions of the chosen parameters. Thus it must remain well-understood that the designer must not attempt to utilize these curves like an abacus permitting him to determine, for instance, the critical speed of his machine.

We have limited ourselves to consideration of the case of a plane wing with two degrees of freedom, bending and torsion. According to the reports by Leisz (ref. 5), the critical speed is given by

$$V_{cr} = \frac{1}{2\pi\rho l b\left[I + m\left(x_g - \frac{l}{2}\right)^2 + \left(m - \frac{1}{2}m_1\right)\frac{l^2}{4}\right]}$$

$$= \frac{\left\{\left[m\left(X_g - l\right) - \frac{1}{2}m_1 l\right]\left[C + P\left(X_e - l\right)^2\right] - P\left[X_e - l\right]\left[I + m\left(X_g - l\right)^2 + \frac{3}{8}m_1 l^2\right]\right\}}{\left[mX_g - \frac{1}{2}m_1 l\right]\left[C + P\left(X_e - \frac{l}{2}\right)^2 + P\frac{l^2}{4}\right] - PX_e\left[I + m\left(X_g - \frac{l}{2}\right)^2 + \left(m - \frac{1}{2}m_1\right)\frac{l^2}{4}\right]}$$

with

P(kg/m)	bending rigidity
C(kgm/m)	torsional rigidity
m(kg sec^2/m)	total mass of the considered area
I(kg sec^2 m^2)	total moment of inertia of the area with respect to an axis parallel to the elastic axis passing through the center of gravity

$X_e(m)$'	abscissa of the elastic axis
$X_g(m)$	abscissa of the center of gravity
$\rho(kg\ sec^2/m^4)$	density of air
$m_1(kg\ sec^2/m)$	mass of the cylinder of air circumscribing a profile
$l(m)$	half-chord of the surface considered

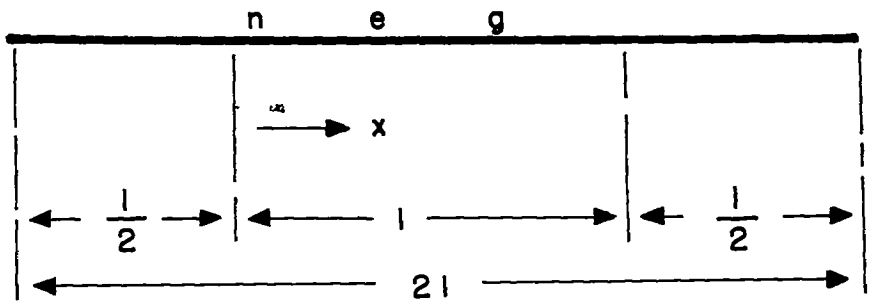

Sketch

Neglecting m_1 (which plays a certain role only with an extremely light wing) and using the dimensionless coefficients

$$M = \frac{I}{ml^2} \qquad K = \frac{C}{Pl^2} \qquad e = \frac{X_e}{l} \qquad g = \frac{X_g}{l}$$

one obtains the simplified formula

$$V_{cr}{}^2 = \frac{P}{2\pi\rho b} \frac{\left[(g - 1)(K + e^2) - (e - 1)(M + g^2) + e - g\right]^2}{\left[g\left(K + e^2 + \frac{1}{2}\right) - e\left(M + g^2 + \frac{1}{2}\right)\right]\left[M + g^2 - g + \frac{1}{2}\right]}$$

One sees that, if b is made 1, that is, for a span section equal to unity, V depends only on 5 parameters. Among them, P appears explicitly as a factor; thus there remain four parameters which permit calculation of the function $V(M,K,e,g)$.

The results are given by the curves of figure 44.

Since

$$\frac{K}{M} = \frac{\omega_T^2}{\omega_f^2} = \eta^2$$

where ω_T and ω_f are, respectively, the angular velocities (circular frequencies) in torsion and in bending, we have shown on each figure the value of η corresponding to the values of M and K. However, one can limit oneself to the values of $\eta > 1$, the only ones to be found in practice.

We have adopted logarithmic representation since, because of the factor P, the small values may assume an importance equal to that of the high values of the function V.

On the other hand, we have limited ourselves to the values of M and K which - for the smallest value of P encountered in practice - give a calculated critical speed of 264 m/sec (M = 0.8), at most; above this, the aerodynamic hypotheses of the calculation are no longer with certainty valid.

APPENDIX V

EXAMPLES OF THE ACHIEVEMENT OF BALANCED CONTROL SURFACES

The reader has already found in this report a certain number of figures which schematize the mounting of balancing masses. These are solutions one may consider as classical. For the sake of completeness, we shall describe here a few less known mountings; they could be useful to designers finding themselves faced with problems analogous to those for which the following solutions were conceived.

In the case represented by figures 45(a) and 45(b), an aileron the axis of rotation of which was situated below the mean plane had to be balanced horizontally; on the other hand, a lever arm or a mass situated outside of the profile were considered undesirable. The solution represented in the figure was adopted; it is elegant and relatively simple.

Figure 46 represents a solution derived from the preceding one; the mass situated in the wing profile ensures this time total balance, horizontal and vertical, around the hinge axis.

However, it must be remarked here that for a rather slender wing, the balancing mass will necessarily have a relatively large weight.

Besides, all that has been said on the necessity of rigid lever arms for connecting the balancing masses to the aileron they have to balance, remains valid; it becomes more difficult to satisfy this condition in proportion as the system of connection becomes more complicated. These two disadvantages may render such a solution practically unacceptable.

The third figure (fig. 47) refers to a tail with double fin. One takes advantage of the fact that the fin participates in the torsional motions of the horizontal stabilizer by placing the mass, which dynamically balances the elevator flap, high on the fin, that is, as far as possible from the horizontal stabilizer.

The original idea had been simply to place in the fin a mass of sufficient inertia to make the fin motionless during the rotations of the horizontal stabilizer. One sees that this last solution is heavier than the preceding one, even if one replaces, in order to lighten it, the single mass by a bar loaded at its two ends and having the same inertia although of less weight (fig. 48).

The designer may think up still other systems. After what has been said above, he can see the great variety of solutions which the problem of balancing permits. However, he should always be on guard against the elasticity of the connecting elements.

This elasticity may indeed make useless in practice a solution which is apparently good in principle like the one represented in figure 49. The idea was that the trailing-edge flap should balance the control surface and at the same time eliminate any possibility of flap-control surface flutter. A model was built and tested, but the length of the linkages made an adaptation of this system to an airplane impossible.

REFERENCES

1. Civil Aeronautic Manual 04, July 1, 1944.

2. Rabeux, G.: Rapport sur Aéro-Elasticité (synthèse des conditions anglaises). C.N.R.S. rapport No. 114, août 1945. Appendice, mai 1946.

3. A.N.C.: Bulletin No. 12, April 1948.

4. De Vries, G.: Synthèse sur la question des micro-vibrations d'avions. Publication O.N.E.R.A., No. 22.

5. Leiss, Karl: Einfluss der einzelnen Baugrossen auf das Flattern. Jahrbuch 1938 der DVL.

6. A.A.F. Technical Report No. 5530 of December 24, 1946.

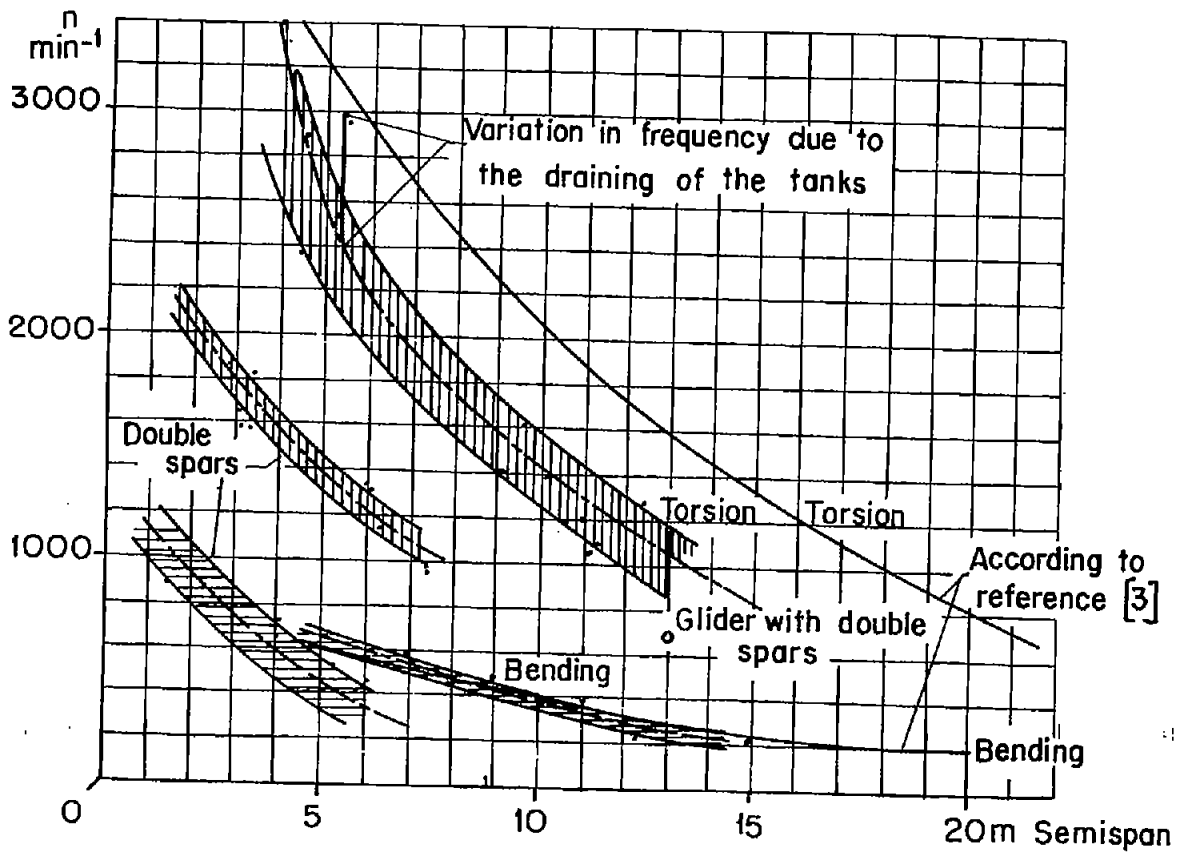
n
min-1
3000
2000
1000
0
5
10
15
20m Semispan
Variation in frequency due to the draining of the tanks
Double spars
Torsion
Torsion
According to reference [3]
Glider with double spars
Bending
Bending

Figure 1.

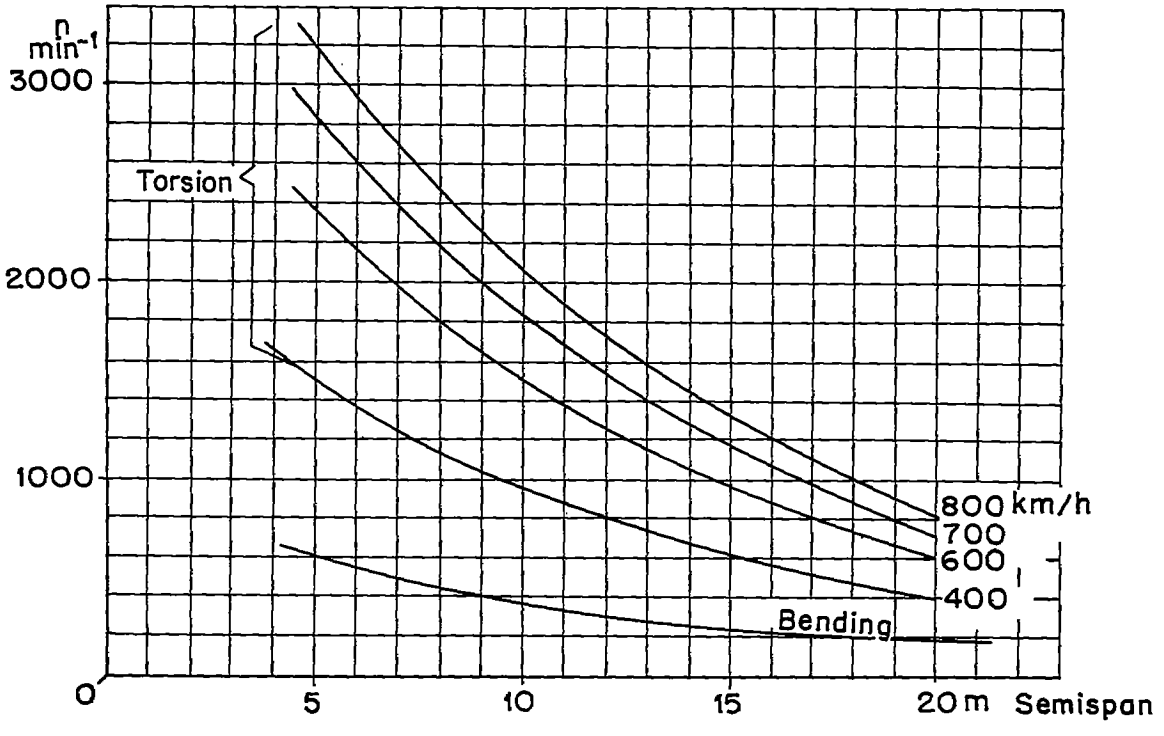
n
min⁻¹
3000
2000
1000
0
Torsion
800 km/h
700
600
400
Bending
5
10
15
20 m
Semispan

Figure 2.

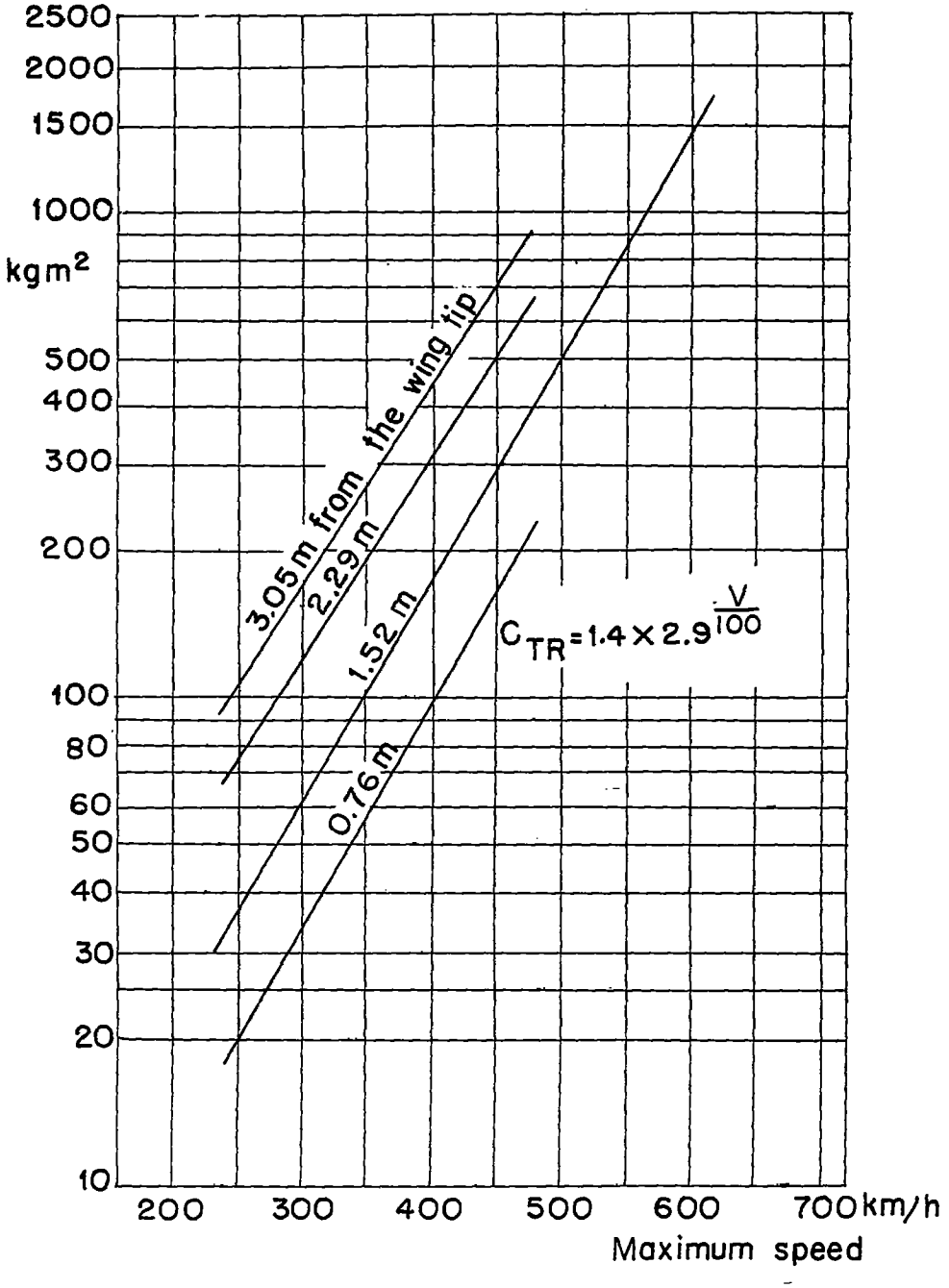

Figure 3.- Torsional rigidity of the wing.

Regulation	Wing	Wing density σ	β	Remarks
Military AP 970	Without engine	$\sigma \leqq 4.85$ kg/m^3	$\beta \geqq 0.143$	For $\sigma > 22.61$ refer to the official agencies
		$4.85 < \sigma < 12.92$	linear variation	
		$\sigma \geqq 12.92$	$\beta \geqq 0.286$	
	With engine	3.23 kg/m$^3 \leqq \sigma \leqq 12.92$	$\beta \geqq 0.205$	For $\sigma < 3.23$ or $\sigma > 12.92$ refer to the official agencies
	Note: In all cases one must have $\beta > 0.072$ for a moment applied at $0.9b/2$			
Civil	Without engine	(all values)	$\beta > 0.258$ or $\beta > 0.172$ $(1 + \sigma/32)$	One takes the smaller one of the two values
	With engine	$0 < \sigma < 32$ kg/m^3	$\beta > 0.205$	Provided the center of gravity of the engine is in front of the leading edge

Figure 4.

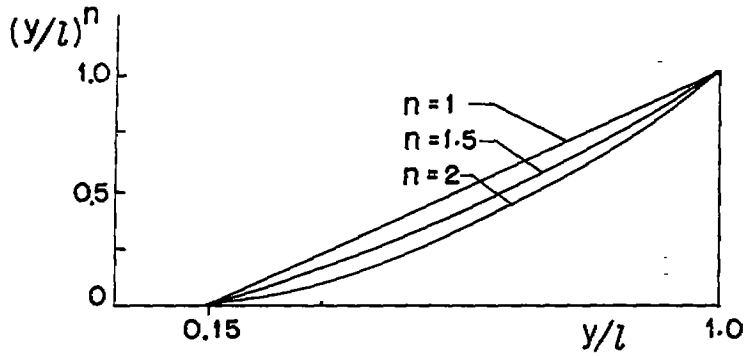

Figure 5.

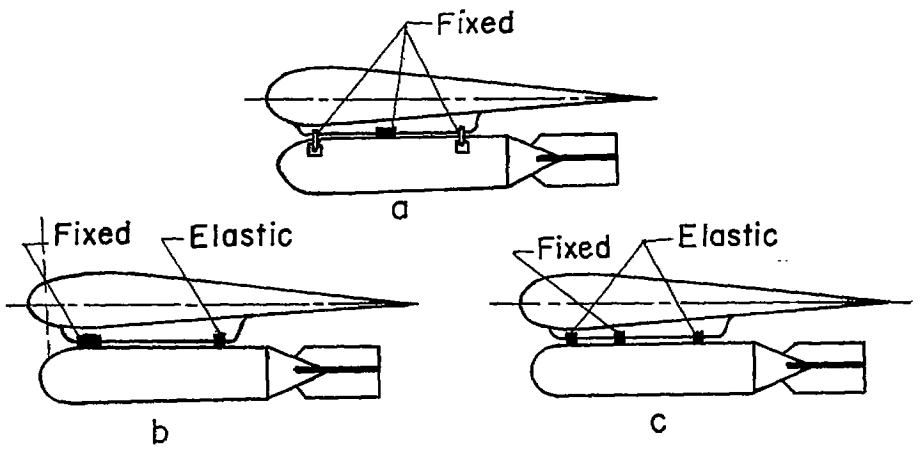

Figure 6.

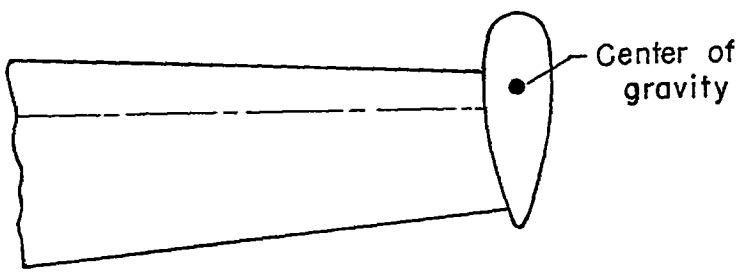

Figure 7.

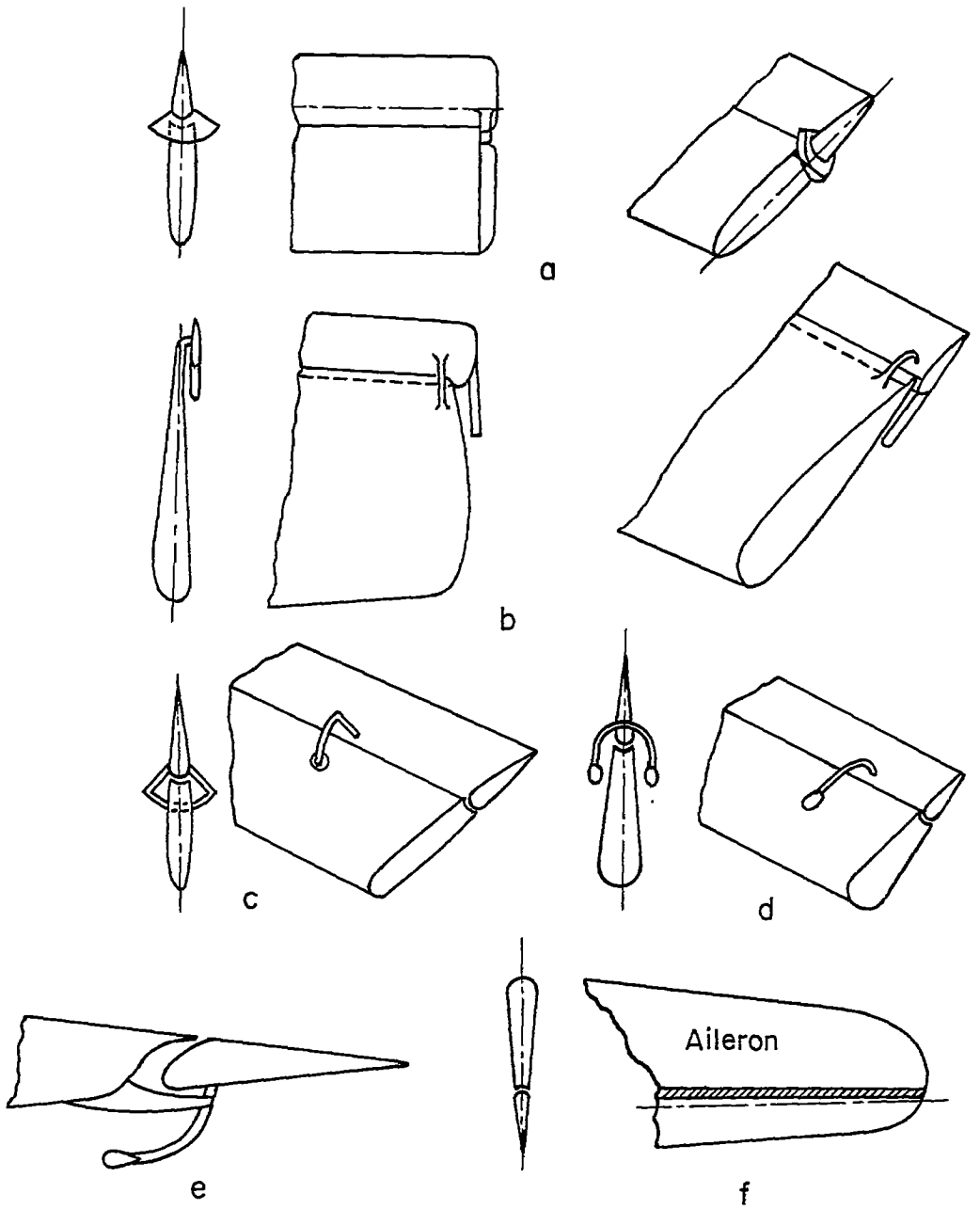

Figure 8.- Different forms of balancing.

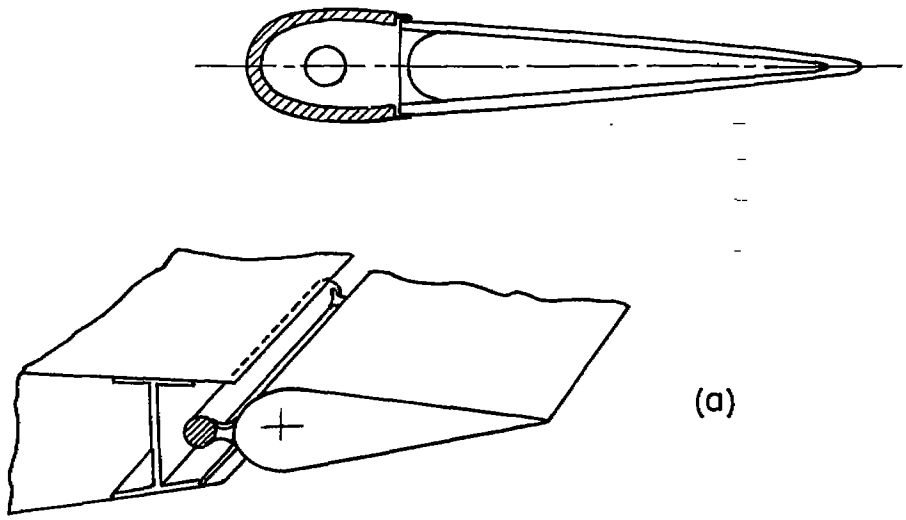

Figure 9.- Section of a balanced aileron.

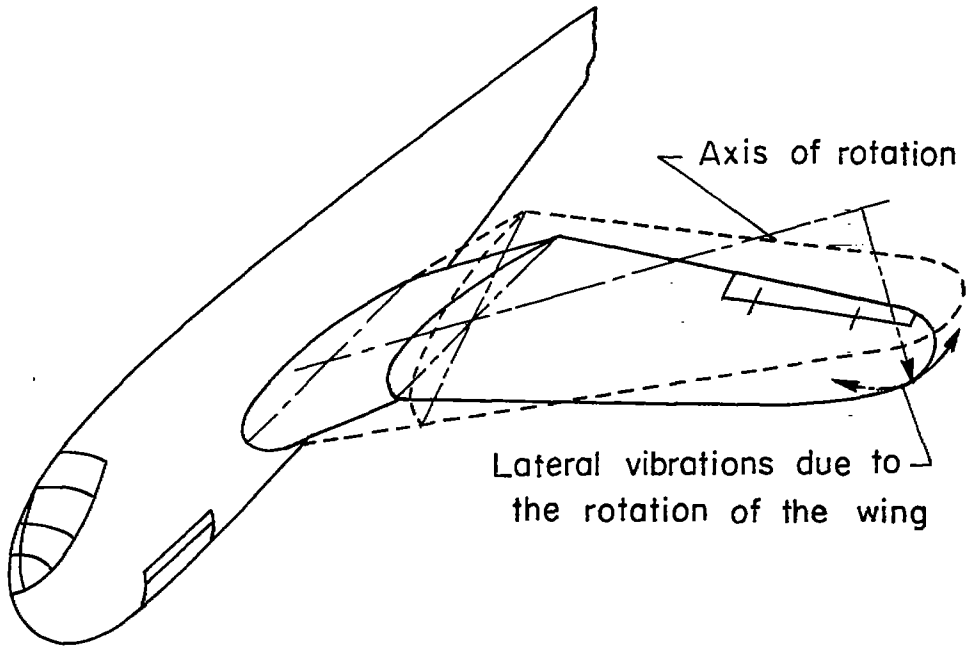

Figure 10.

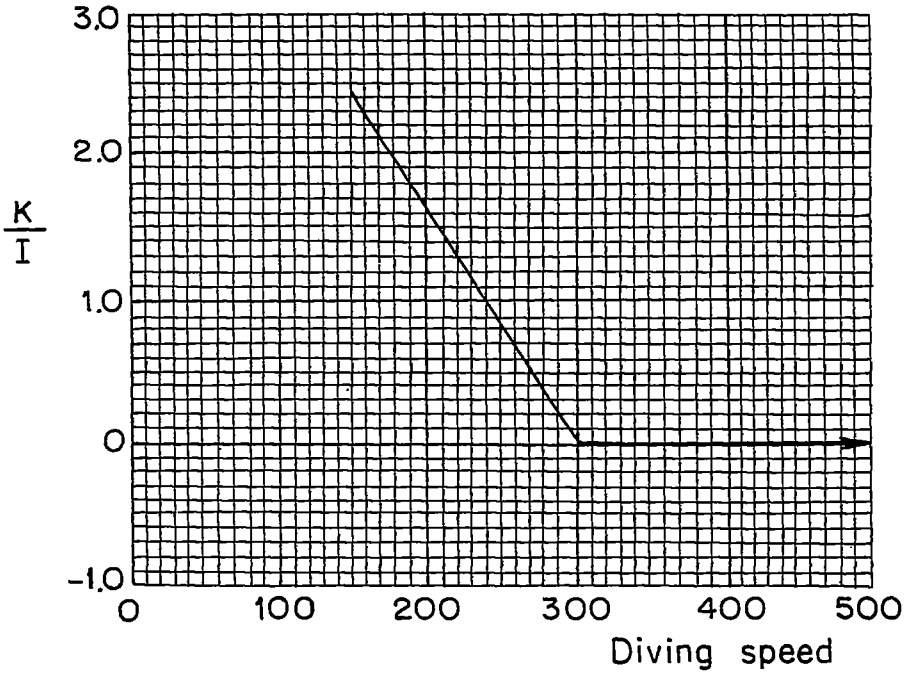

Figure 11.- Dynamic balance of the aileron and of the rudder.

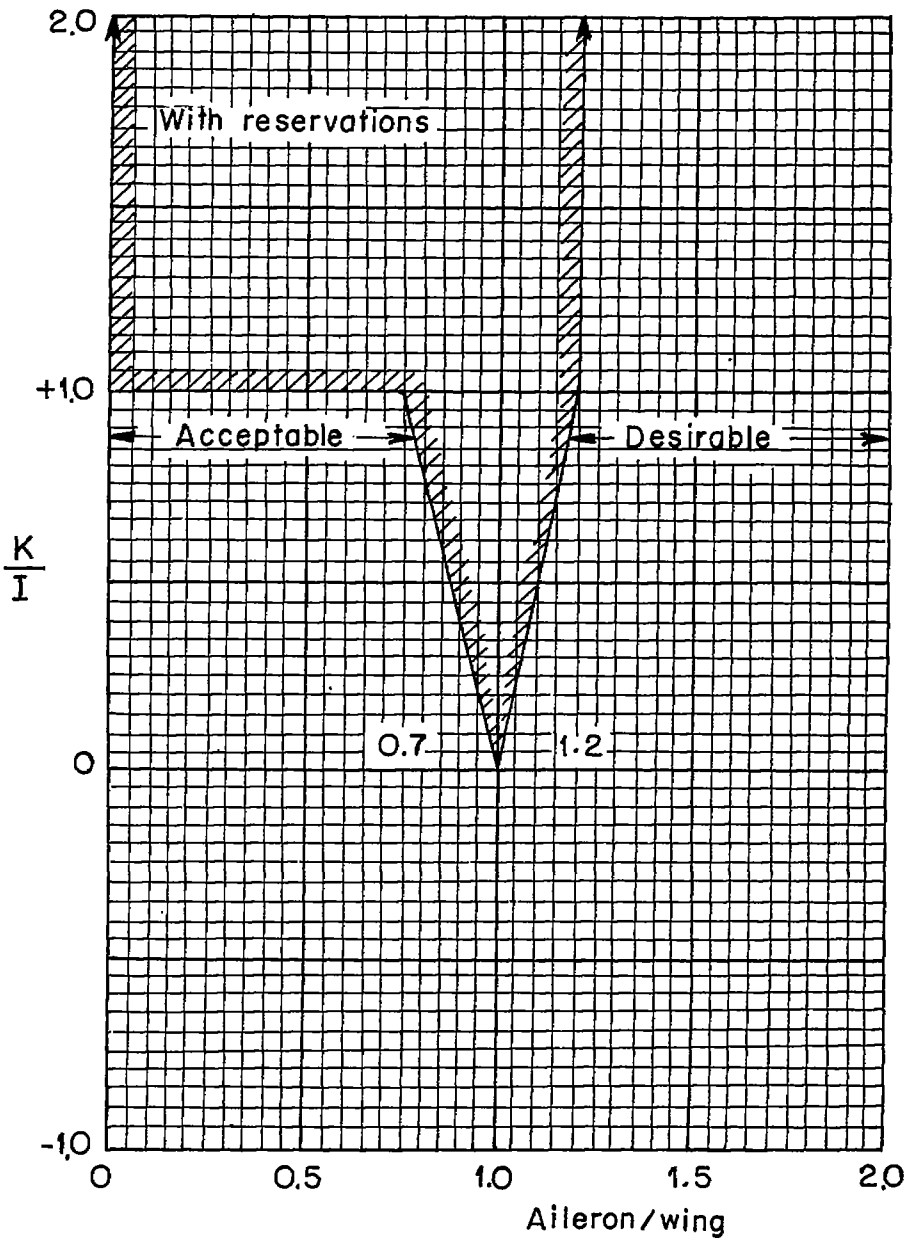

Figure 12.- Dynamic balance as a function of the frequency ratio.

Aileron with balancing mass	R_A
One or two concentrated masses	$>0.018(da/ba)^{1/2}$
More than two concentrated masses placed at equal distances along the span	>0.009
More than two masses unequally spaced	>0.009 or $0.018(da/ba)^{1/2}$ (the largest)
Mass distributed along the span	>0.009

Aileron with irreversible or damped control, without balancing mass	R_A
Control fixed at one or two points along the span	$>0.018(da/ba)^{1/2}$
Control fixed at more than two points equally spaced along the span	>0.009
Control fixed at more than two unequally spaced points	>0.009 or $0.018(da/ba)^{1/2}$ (the largest)

Figure 13.

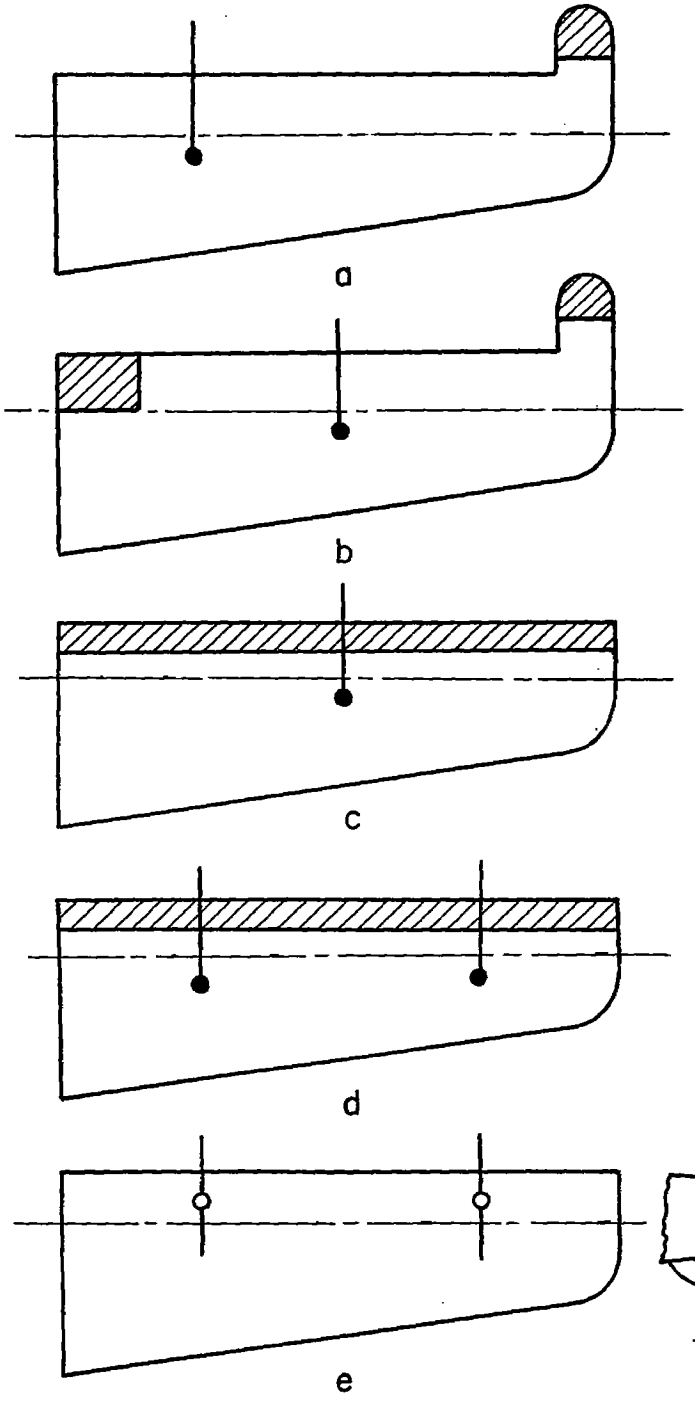

Figure 14.

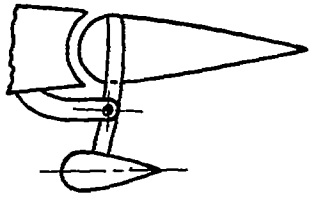

Figure 15.

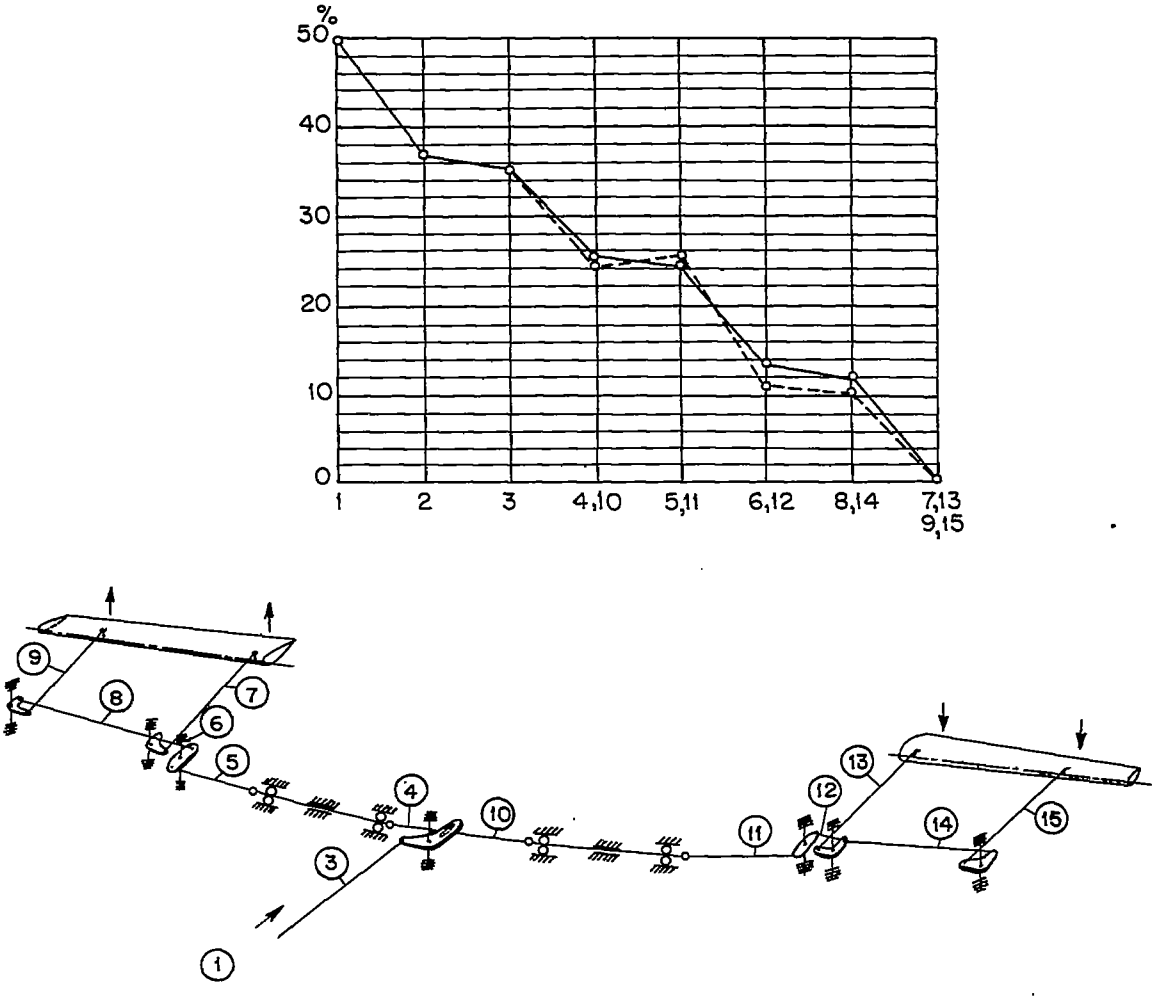

Figure 16.- Deformations at the various points of measurement in percent of the total displacement of the shaft.

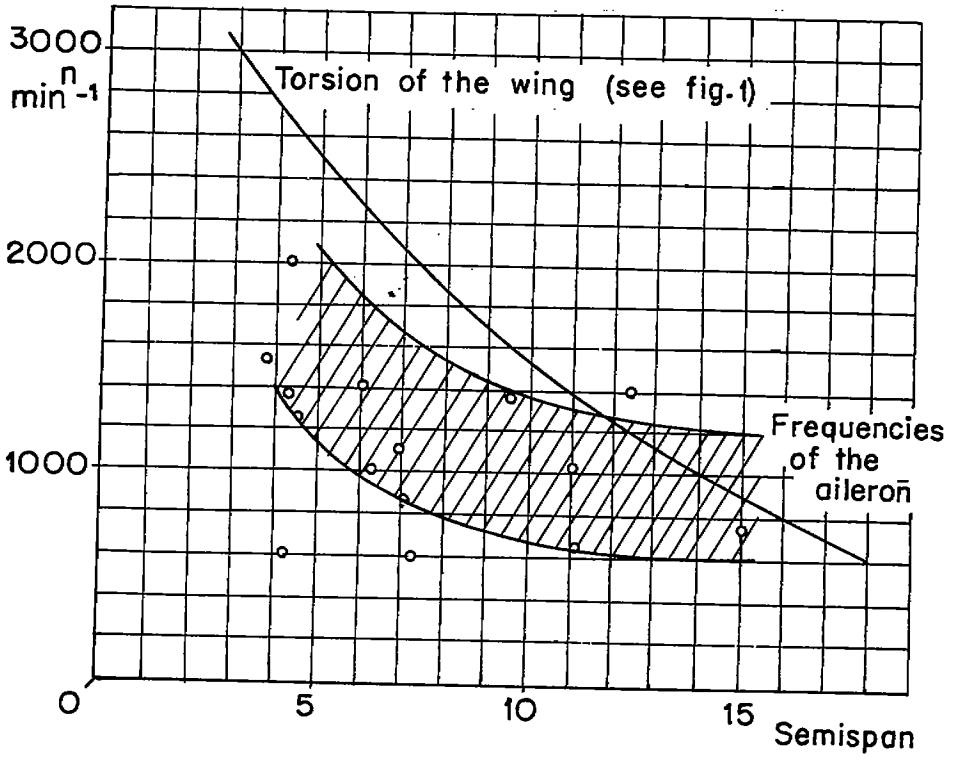
3000
n
min-1
2000
1000
0
5
10
15
Semispan
Torsion of the wing (see fig.1)
Frequencies
of the
aileron

Figure 17.

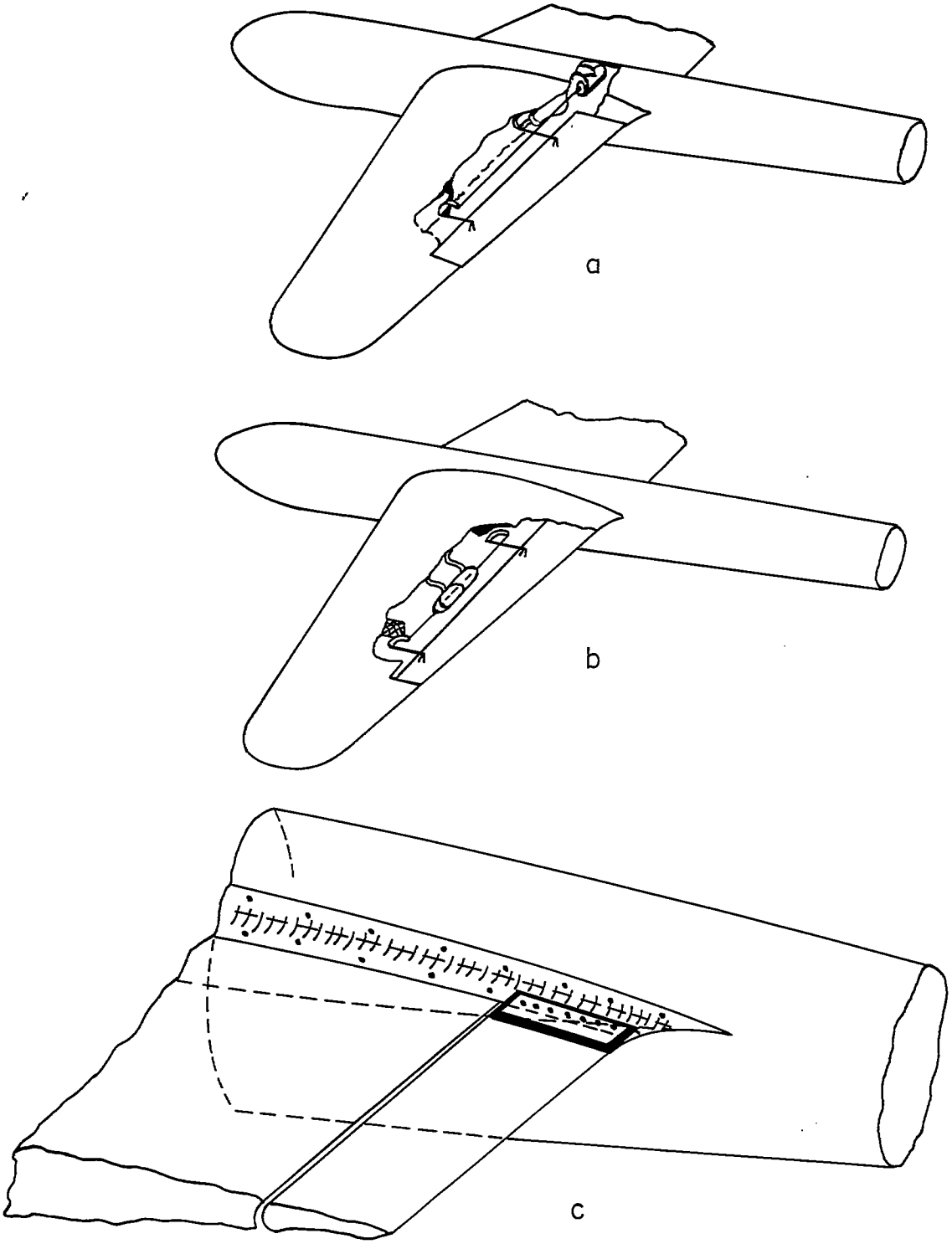

Figure 18.

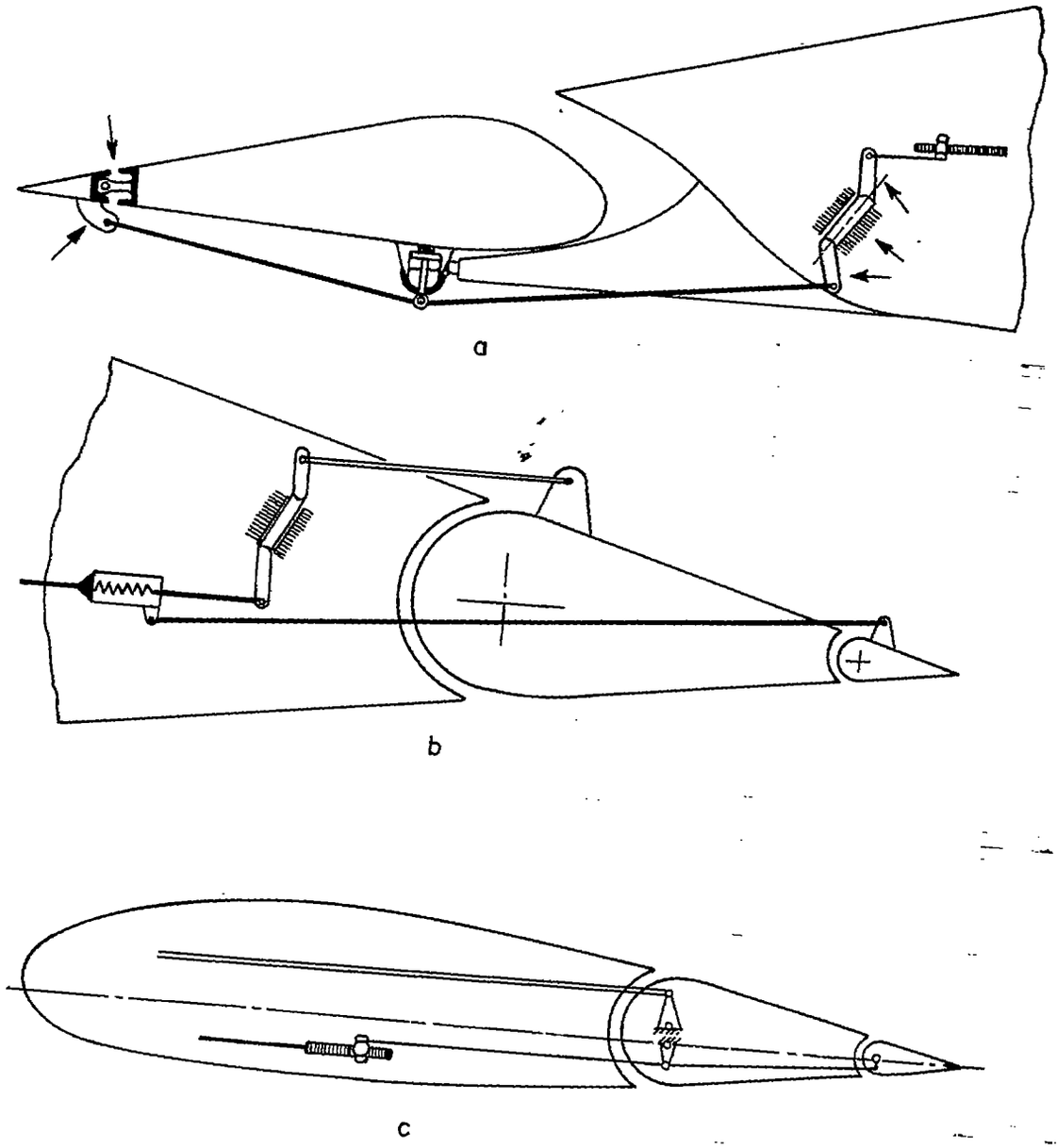

Figure 19.

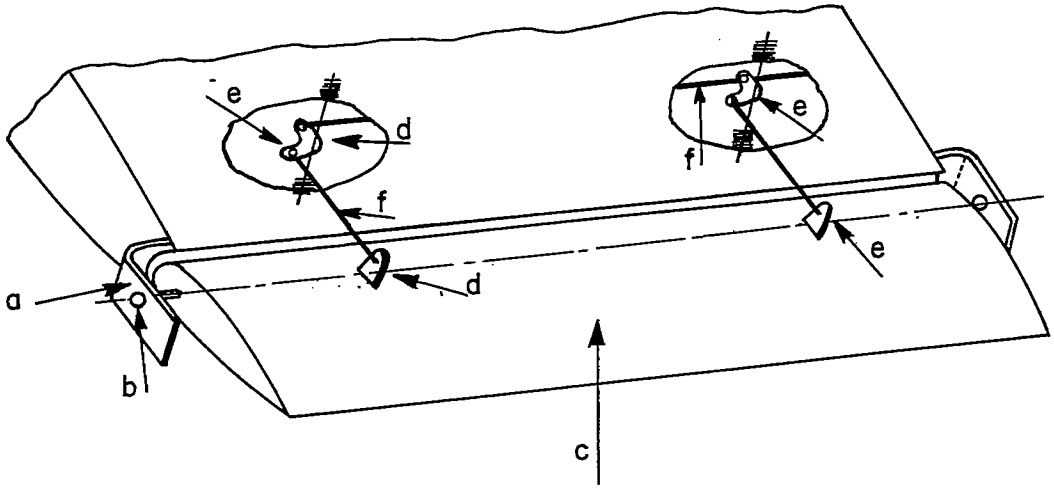

Figure 20.

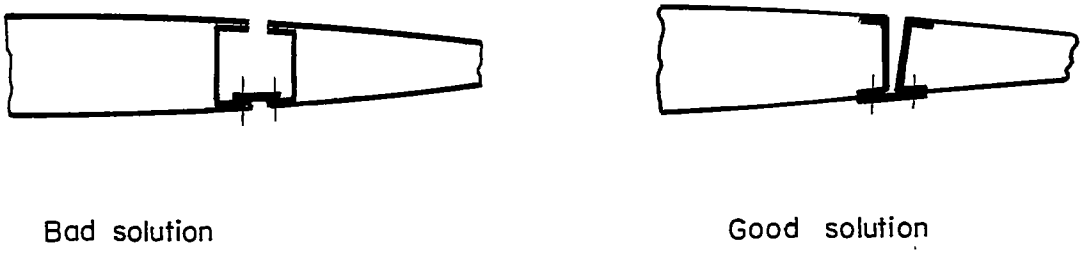

Figure 21.

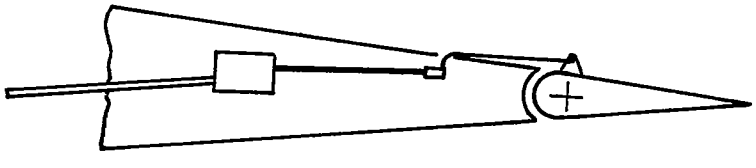

Figure 22.

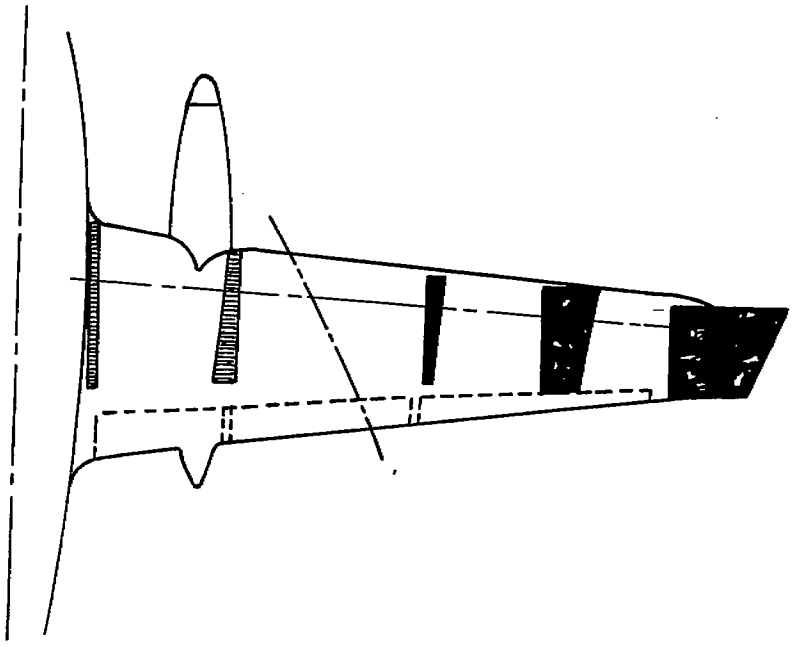

Figure 23.- Bending predominant.

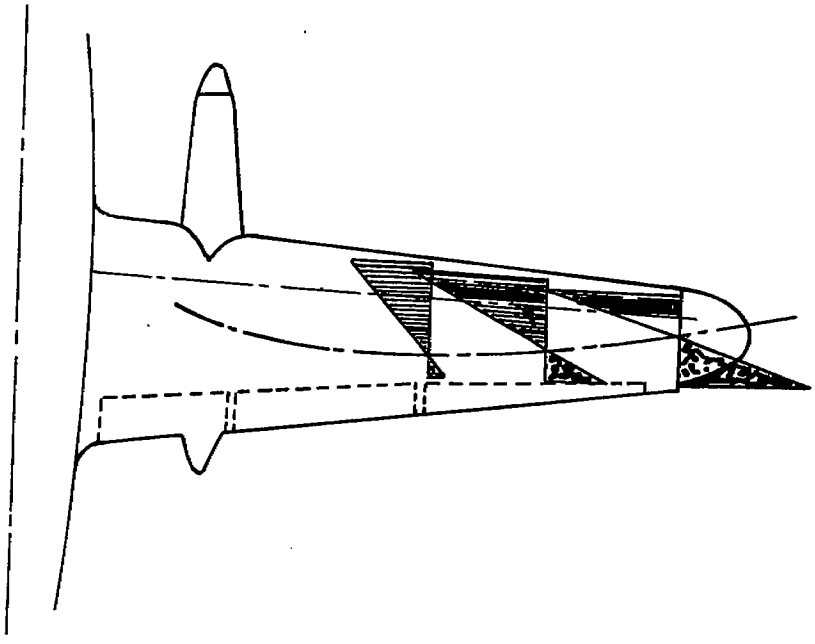

Figure 24.- Torsion predominant.

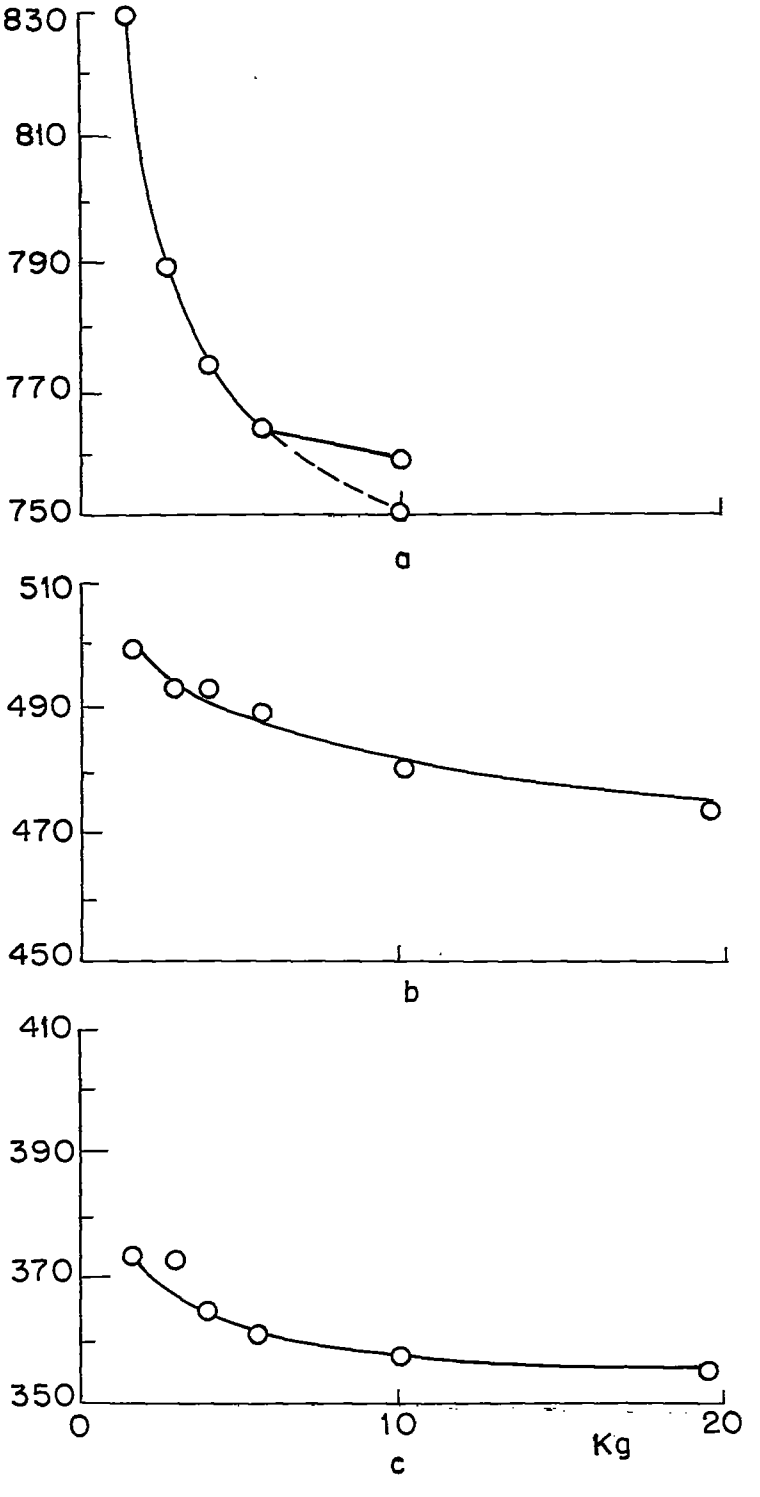

Figure 25.

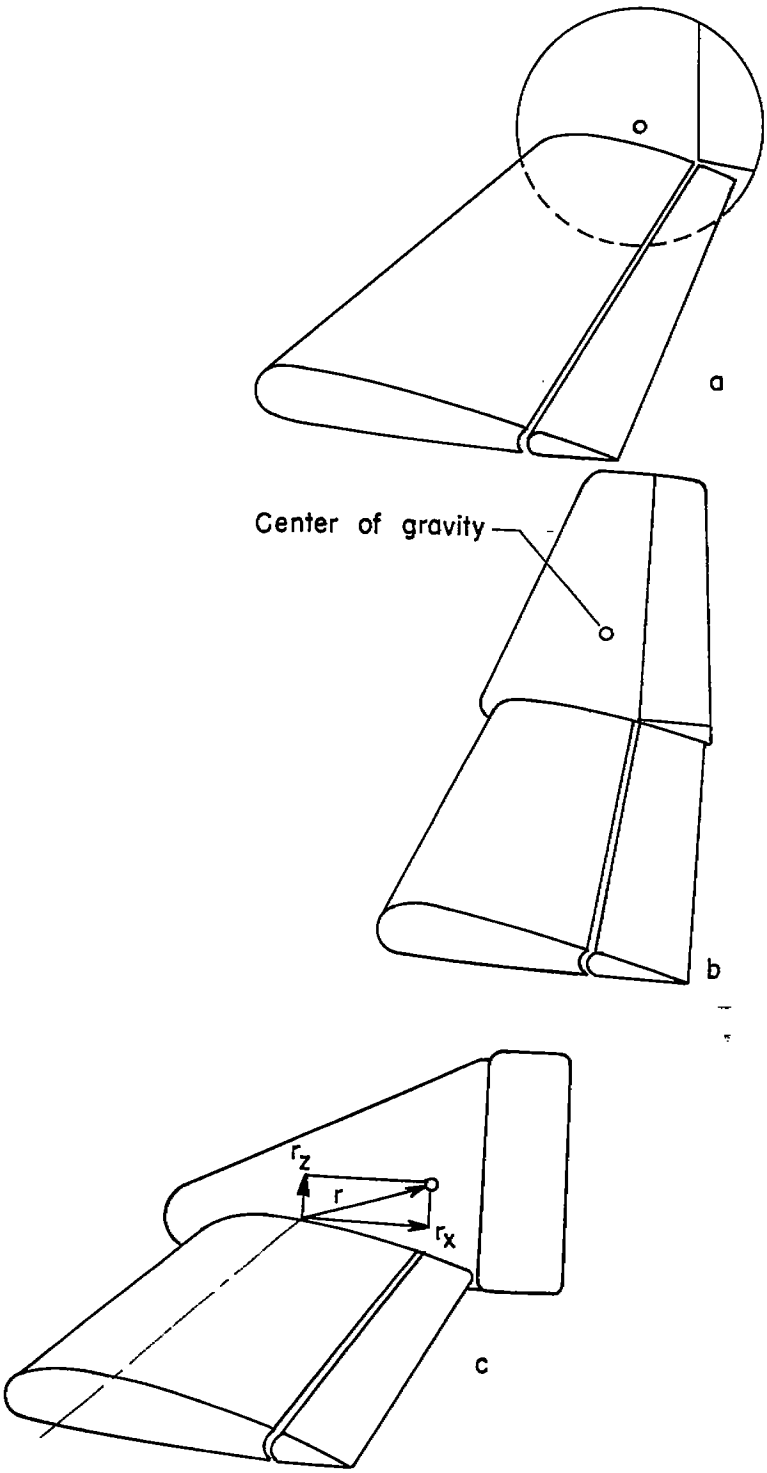

Figure 26.

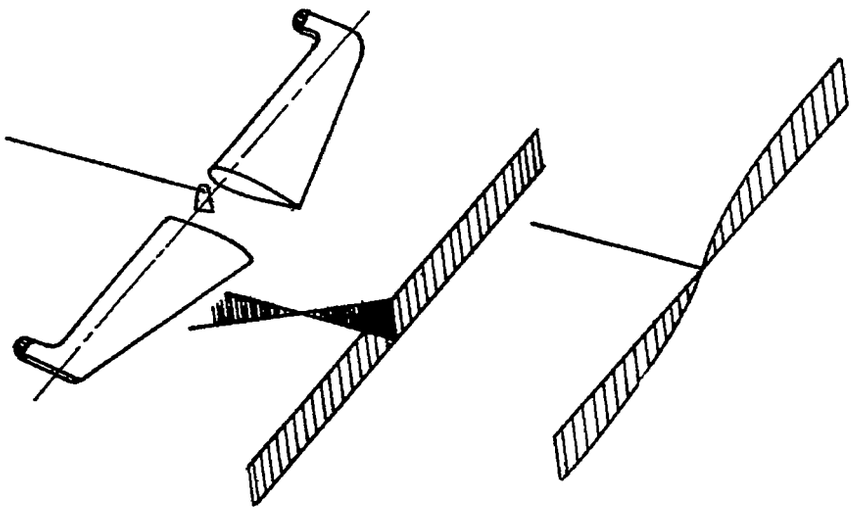

Figure 27.

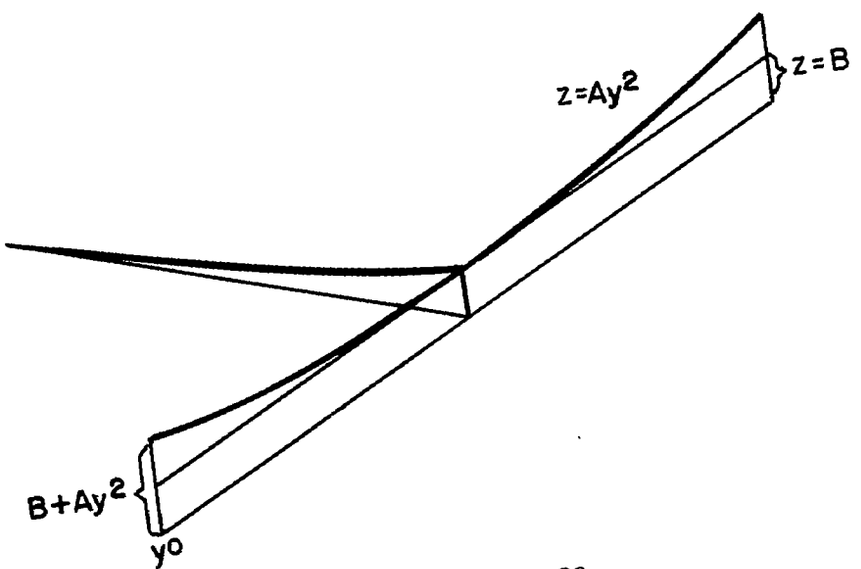

Figure 28.

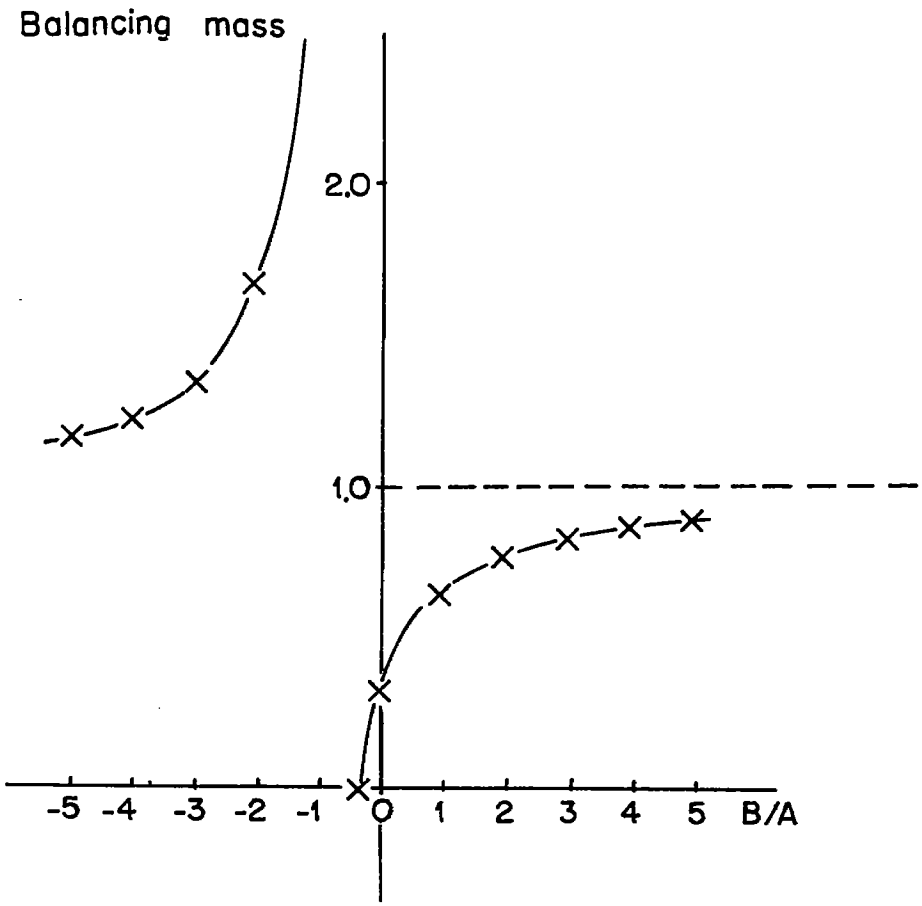

Figure 29.

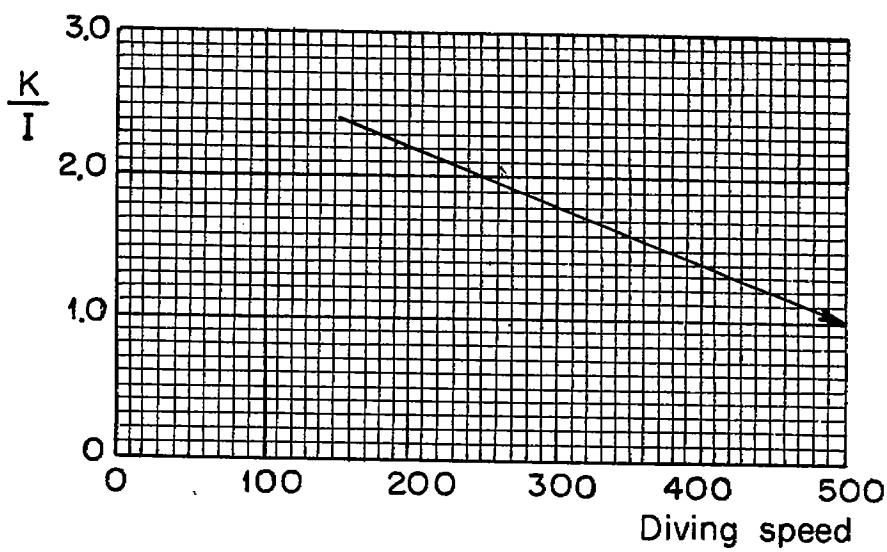

Figure 30.

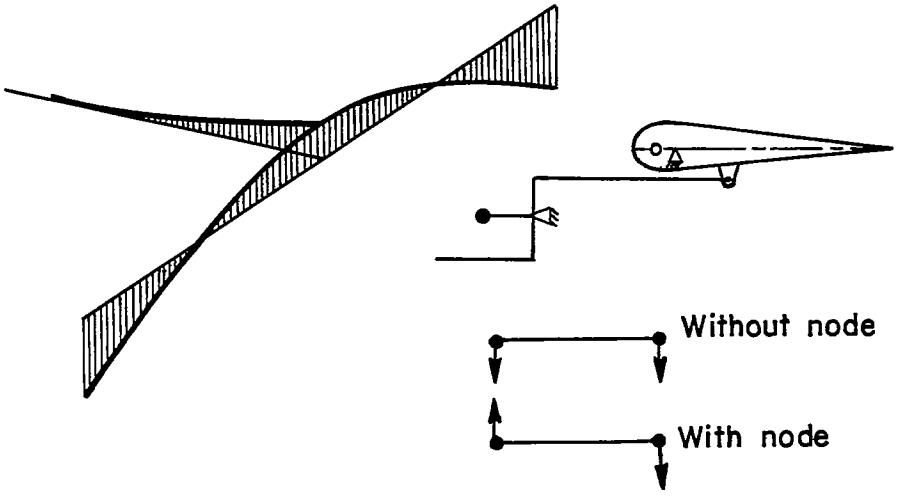

Figure 31.

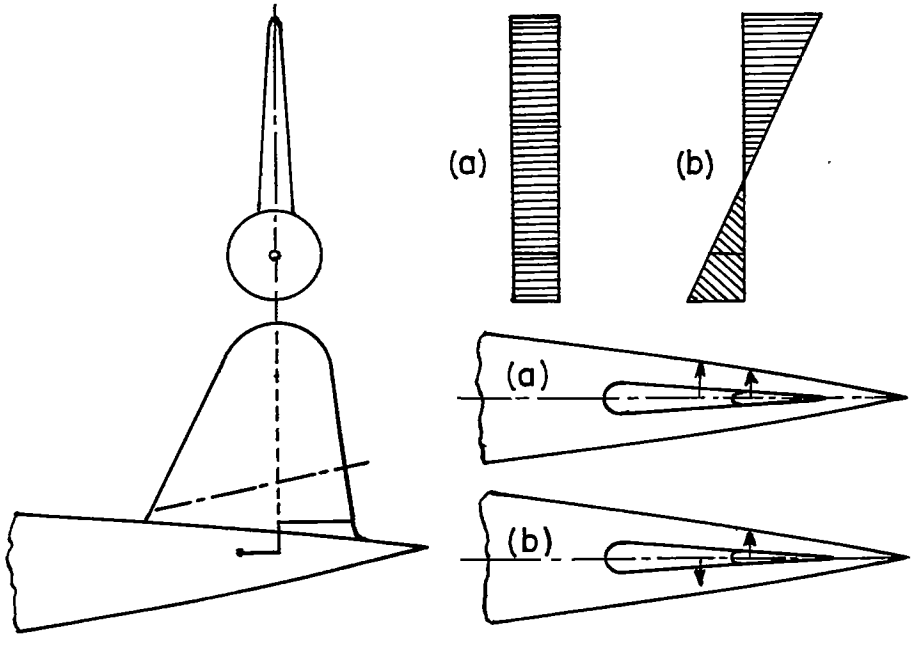

Figure 32.

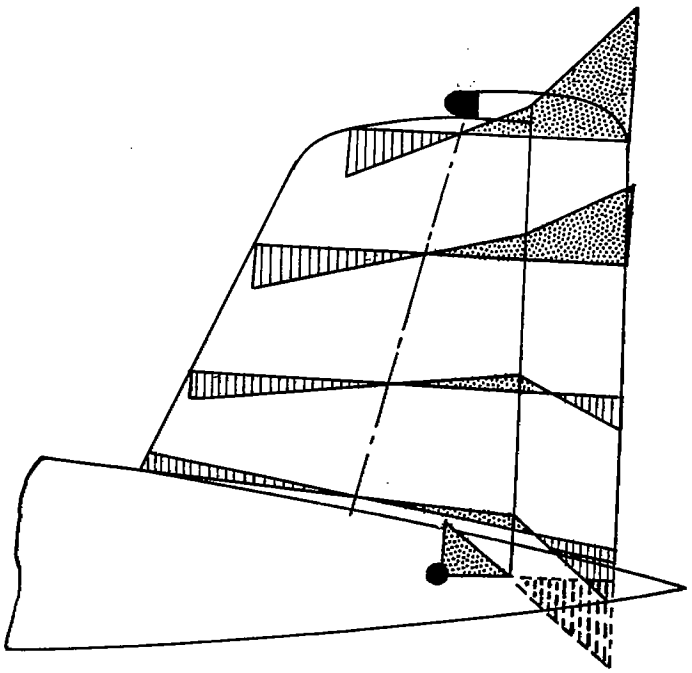

Figure 33(a).

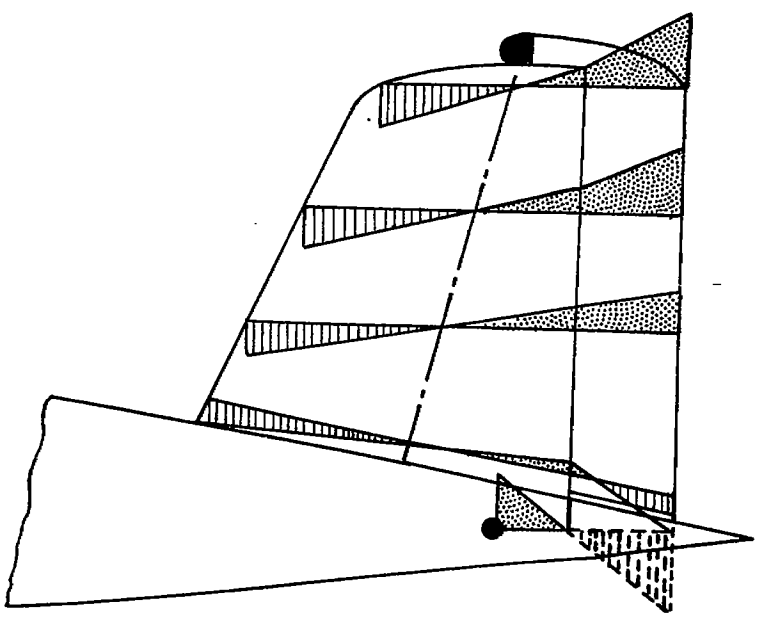

Figure 33(b).

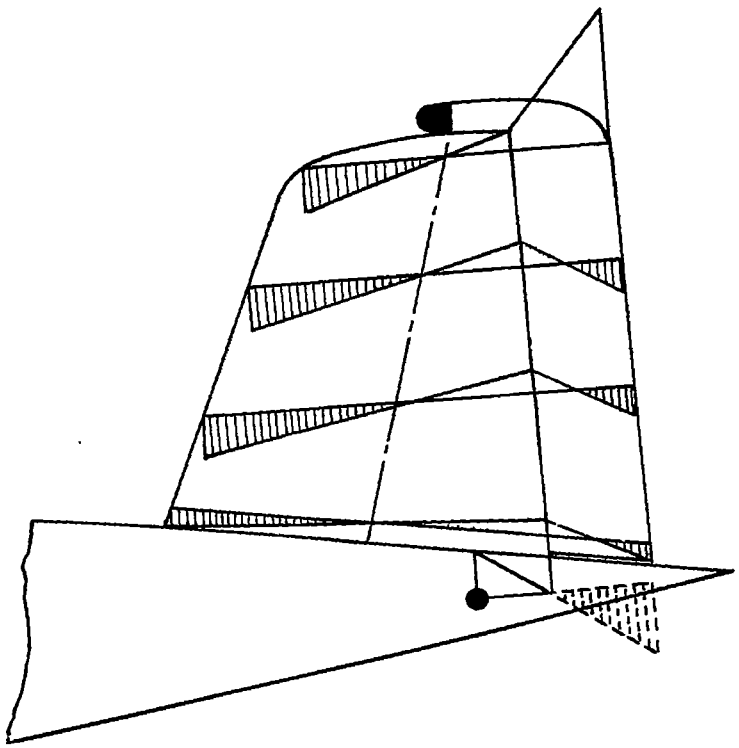

Figure 33(c).

RIGIDITY OF THE FUSELAGE

(English Criteria)

$$\beta = \frac{1}{V}\left(\frac{C}{S - l}\right)^{1/2}(1 - M^2)^{1/4}$$

Case	C (m kg/rad)	S (m^2)	l (m)	β
Vertical bending	Rigidity of the fuselage between the 1/4 chord of the wing and the elevator axis	Overall area of the horizontal tail	Distance between the two sections where the rigidity is measured	$\beta > 0.87$
Lateral bending	Rigidity of the fuselage between the 1/4 chord of the wing and the rudder axis	Overall area of the vertical tail	Distance between the two sections where the rigidity is measured	$\beta > 1.02$
Torsion	Rigidity of the fuselage between the 1/4 chord of the wing and the elevator axis	Overall area of the horizontal and vertical tails	Half the sum of the spans of the two tails	$\beta > 0.26$

V velocity in the calculation (m/sec)

M Mach number

Figure 34.

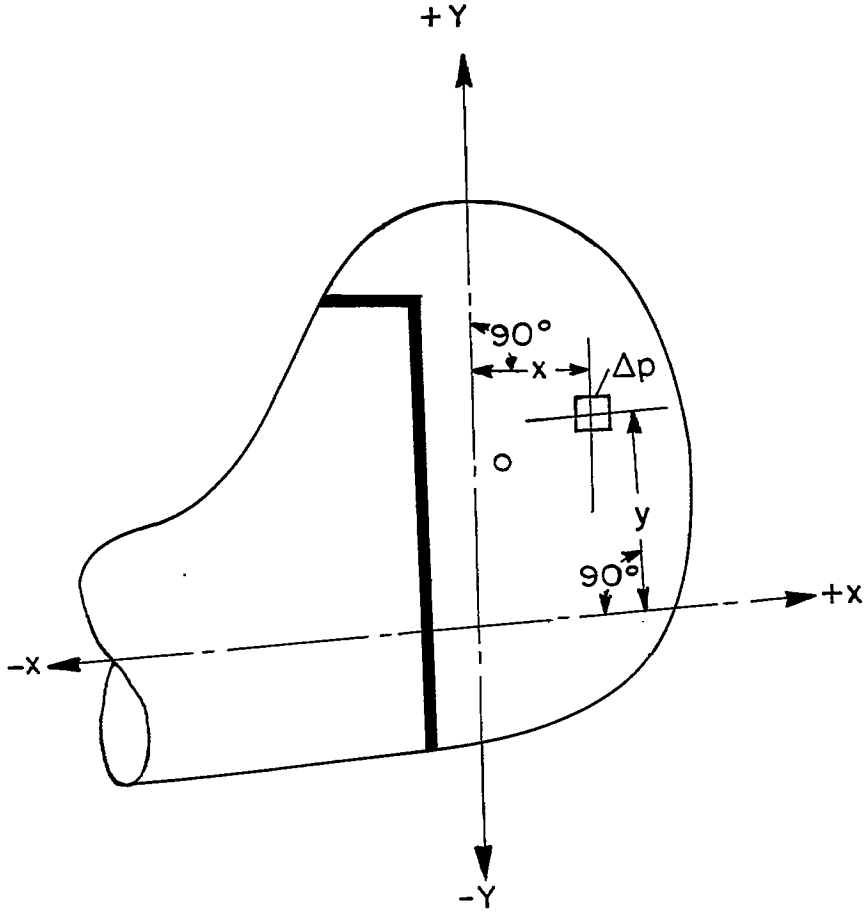

Figure 35.

Rf	No.	Nomen-clature	P (kg)	x cm	x^2	Px		$I = px^2$	y cm	K = Pxy	
						-	+			-	+
			(1)	(2)	(3)	(4)	(5)	(6)	(7)	(8)	(9)
			Σ			-Σ	+Σ	Σ		-Σ	+Σ

$$K/I = \frac{\Sigma(\text{col. } 8) + \Sigma(\text{col. } 9)}{\Sigma(\text{col. } 6)}$$

Figure 36.

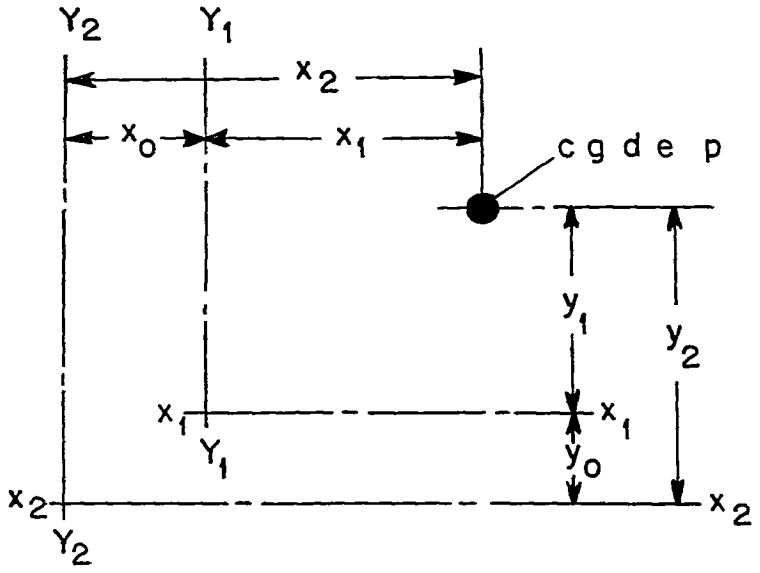

Figure 37.

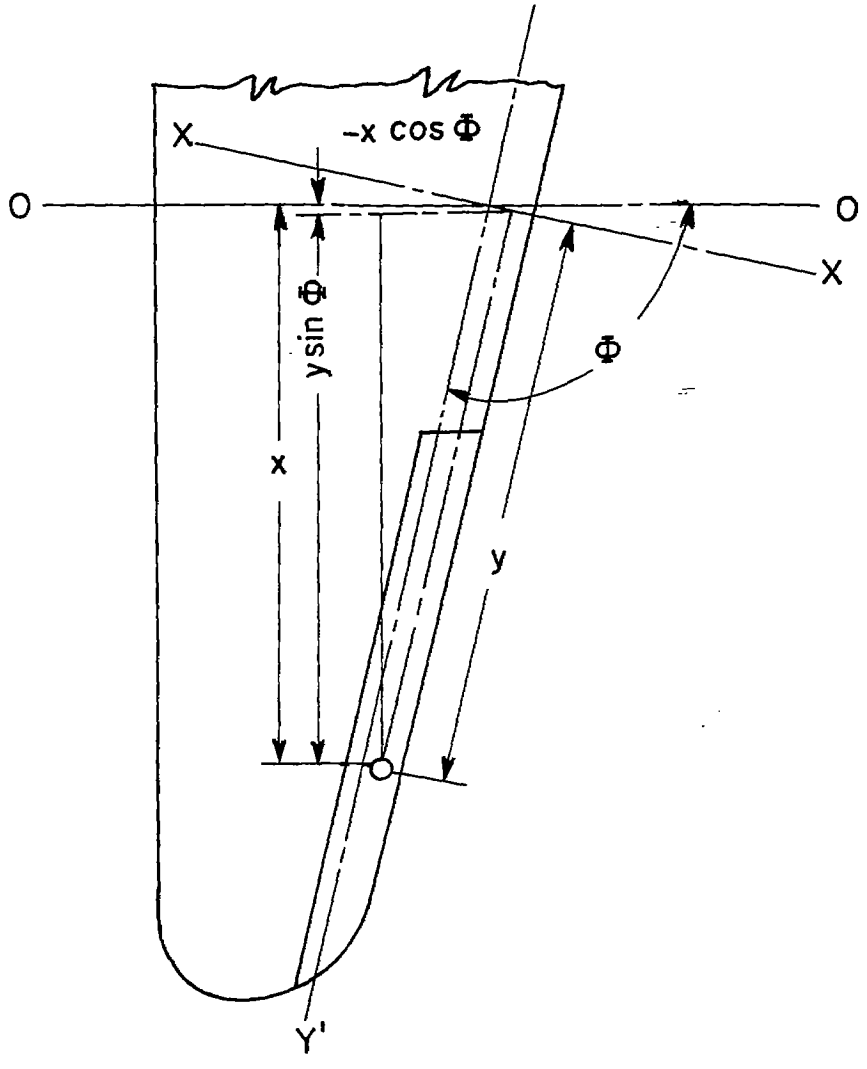

Figure 38.

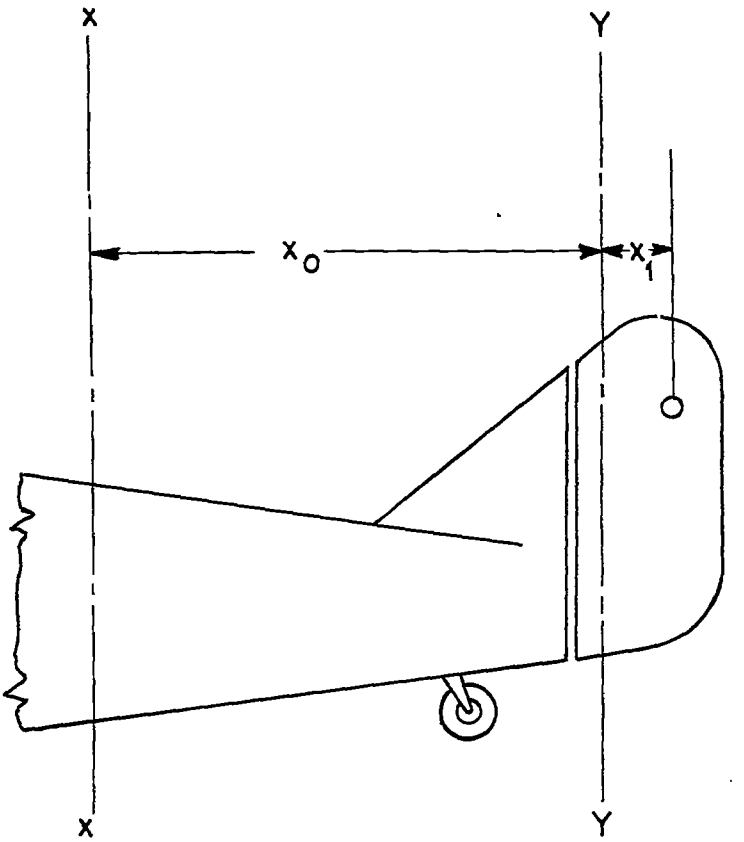

Figure 39.

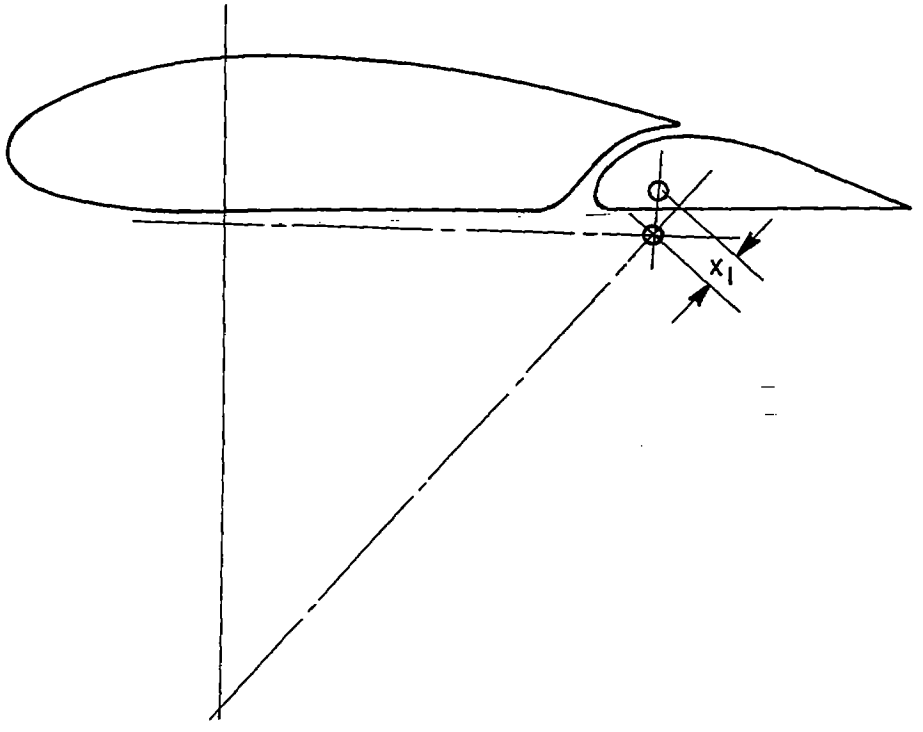

Figure 40.

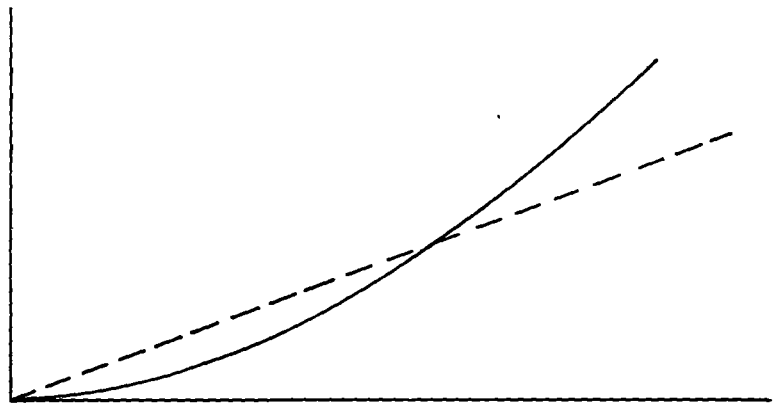

Figure 41.

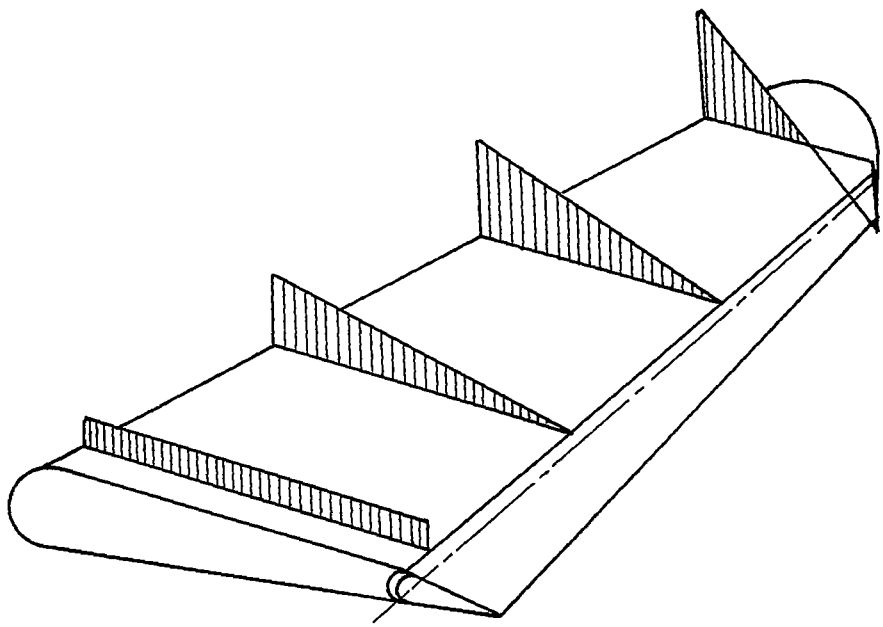

Figure 42.

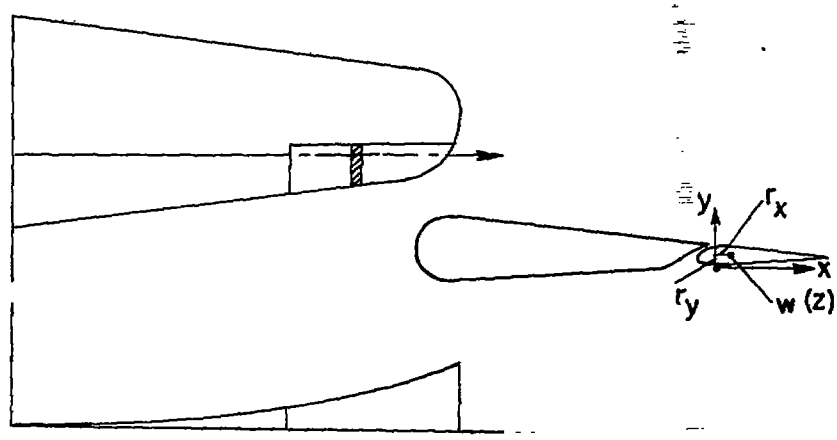

Figure 43.

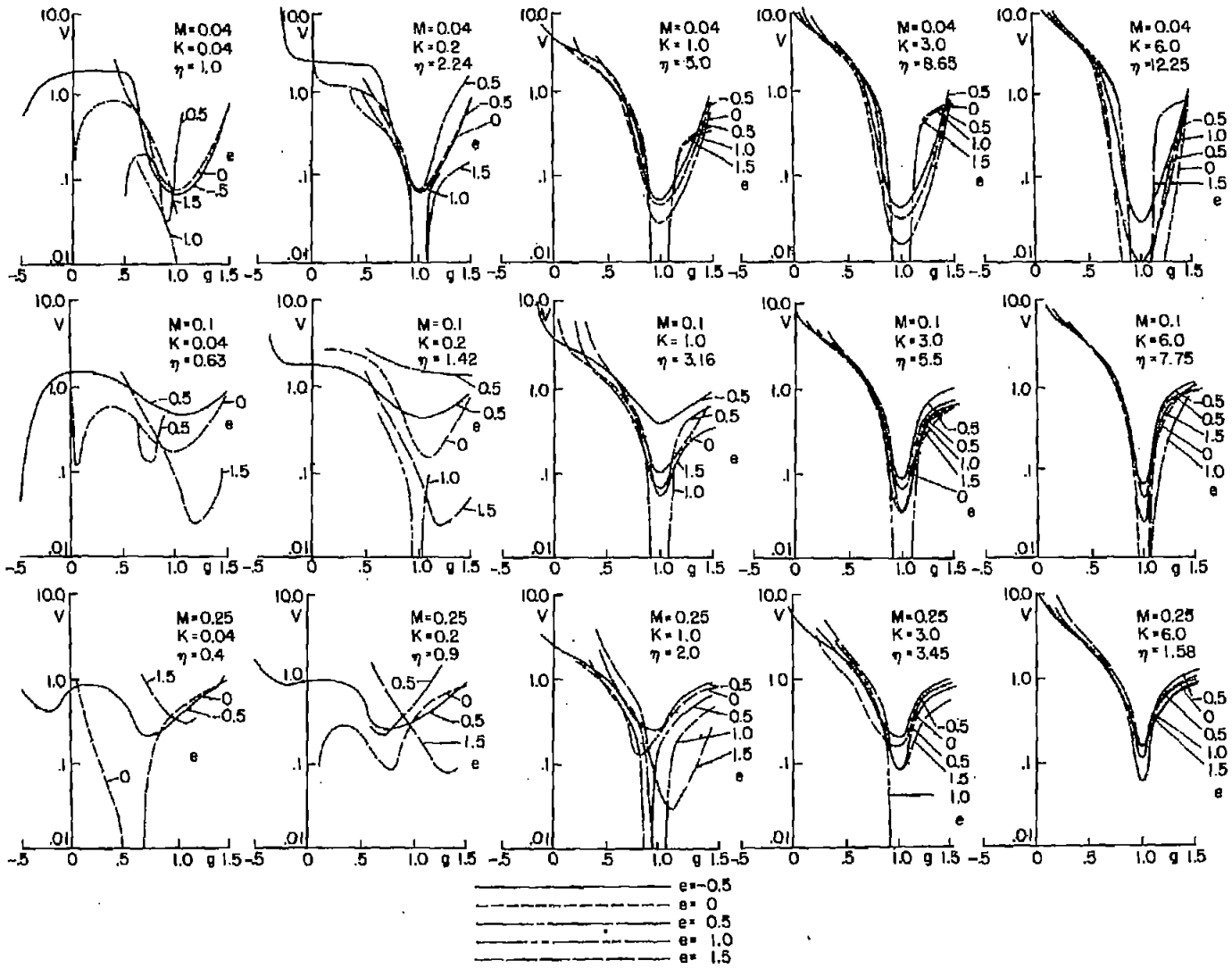
M=0.04 K=0.04 η=1.0
M=0.04 K=0.2 η=2.24
M=0.04 K=1.0 η=5.0
M=0.04 K=3.0 η=8.65
M=0.04 K=6.0 η=12.25
M=0.1 K=0.04 η=0.63
M=0.1 K=0.2 η=1.42
M=0.1 K=1.0 η=3.16
M=0.1 K=3.0 η=5.5
M=0.1 K=6.0 η=7.75
M=0.25 K=0.04 η=0.4
M=0.25 K=0.2 η=0.9
M=0.25 K=1.0 η=2.0
M=0.25 K=3.0 η=3.45
M=0.25 K=6.0 η=1.58
V
g
e
e=-0.5
e= 0
e= 0.5
e= 1.0
e= 1.5

Figure 44.

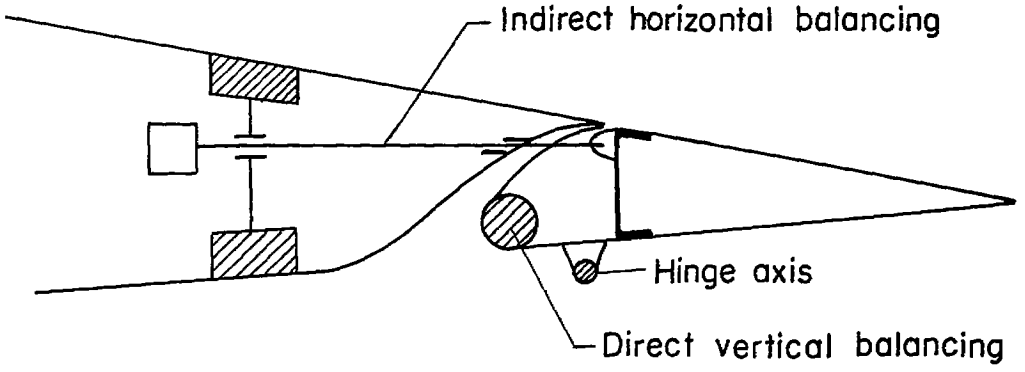

Figure 45(a).

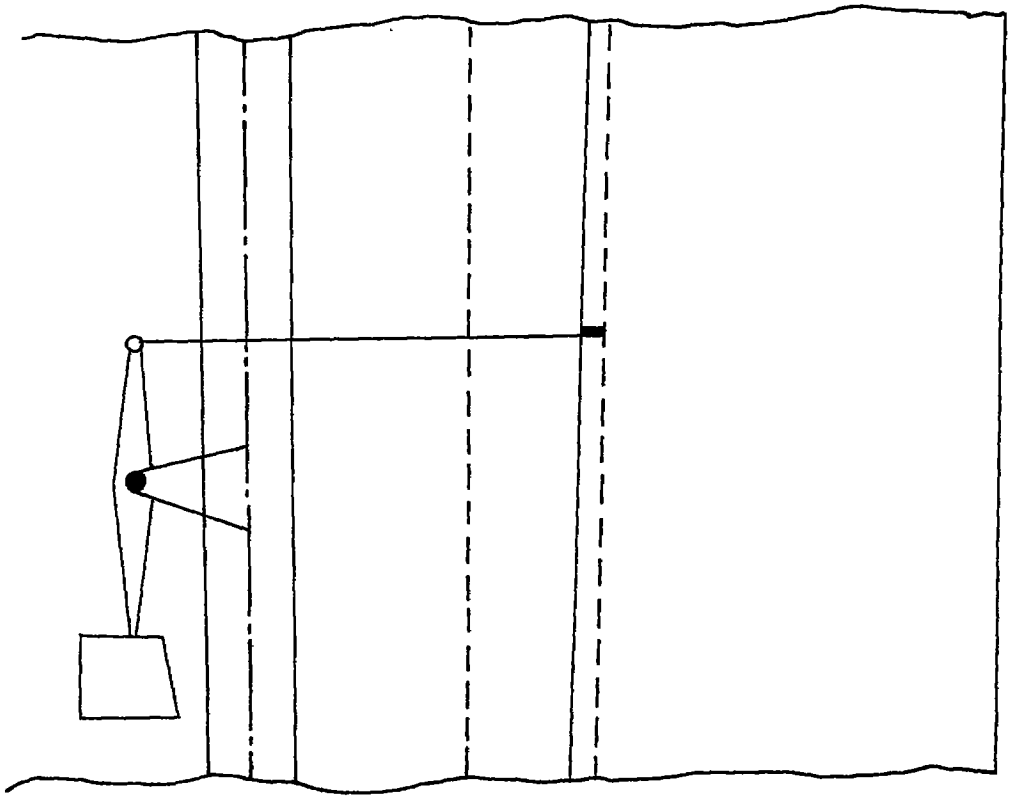

Figure 45(b).

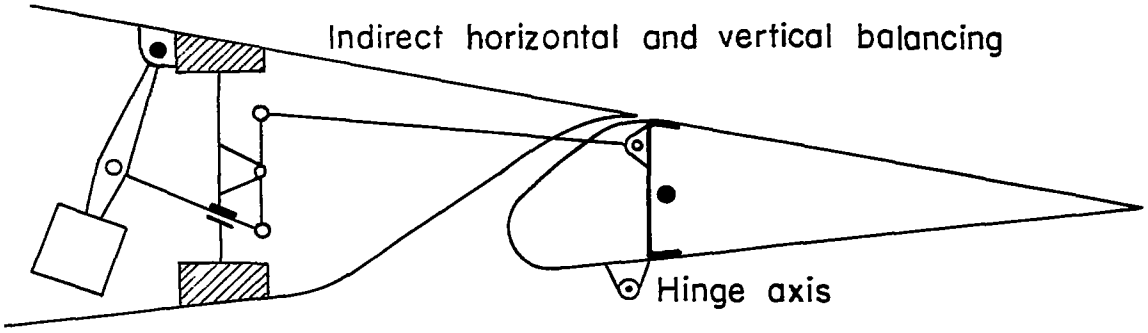

Figure 46.

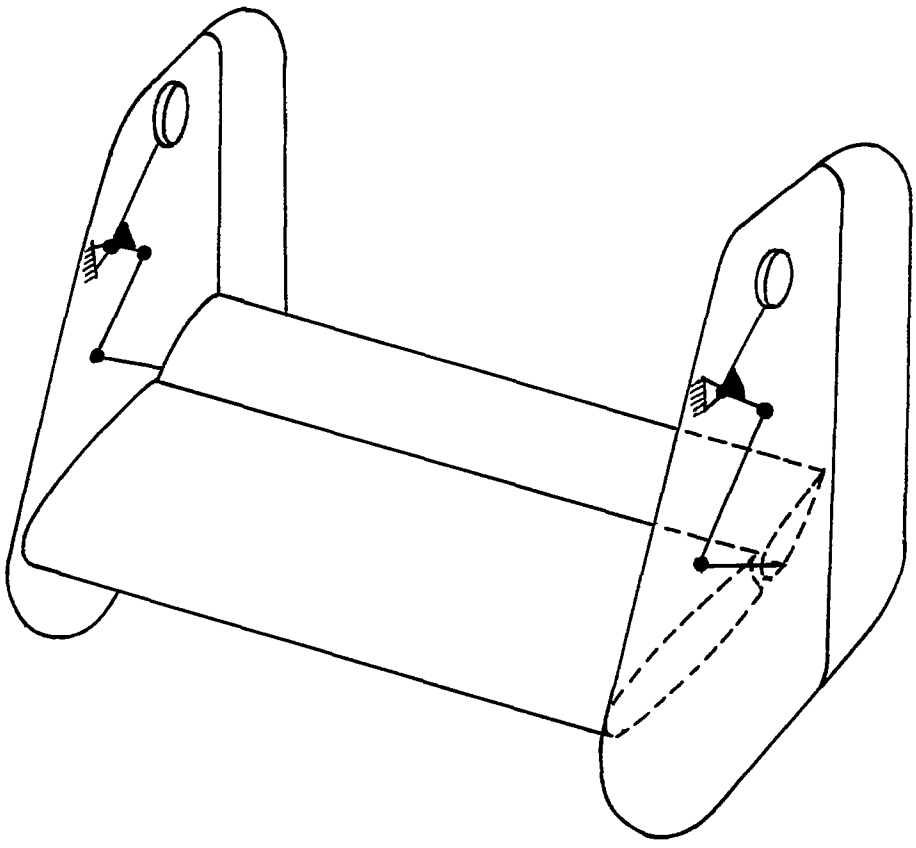

Figure 47.

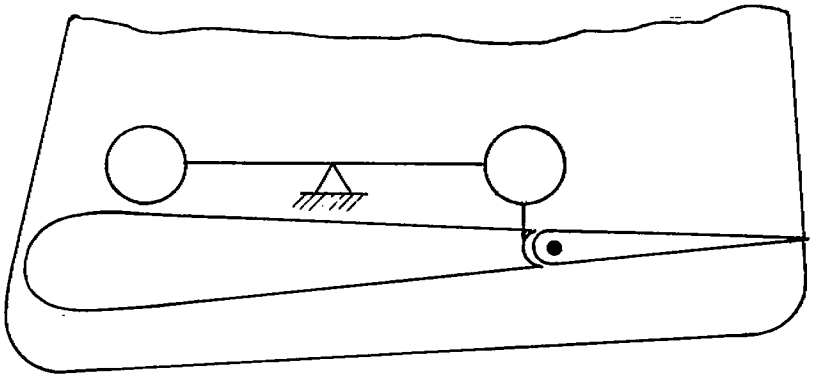

Figure 48.

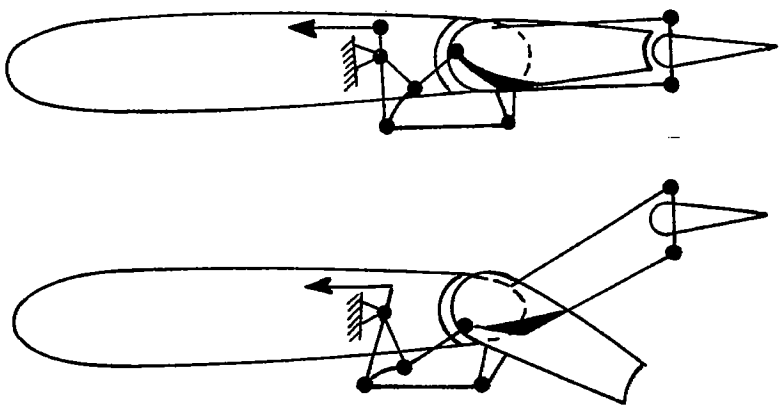

Figure 49.